Voluntary Product Standard PS 1-19

Structural Plywood

December 2019

U.S. Department of Commerce
Wilbur L. Ross, Jr., Secretary

National Institute of Standards and Technology
Walter Copan, NIST Director and Undersecretary of Commerce for
Standards and Technology

Certain commercial entities, equipment, or materials may be identified in this document in order to describe an experimental procedure or concept adequately. Such identification is not intended to imply recommendation or endorsement by the National Institute of Standards and Technology, nor is it intended to imply that the entities, materials, or equipment are necessarily the best available for the purpose.

Additional information concerning the development and use of this standard can obtained by contacting the Standards Coordination Office, National Institute of Standards and Technology, 100 Bureau Drive, MS 2100, Gaithersburg, MD 20899-2100 or visiting Standards.Gov.

DEPARTMENT OF COMMERCE (DOC) VOLUNTARY PRODUCT STANDARDS

DOC Voluntary Product Standards are developed under procedures published by the Department of Commerce in Title 15 Code of Federal Regulations Part 10, *Procedures for the Development of Voluntary Product Standards.* The purpose of these standards is to establish nationally recognized requirements for products and to provide all concerned interests with a basis for common understanding of the characteristics of the products. The National Institute of Standards and Technology (NIST) administers the Voluntary Product Standards program on a reimbursable basis.

ROLE OF NIST

The role of NIST in the establishment of a DOC Voluntary Product Standard is to act as an unbiased coordinator in the development of the standard, provide editorial assistance in the preparation of the standard, supply such assistance and review as is required to assure the technical soundness of the standard, and seek satisfactory adjustment of valid points of disagreement. NIST also determines compliance with the criteria of the Department's procedures and publishes the standard as a public document.

Producers, distributors, users, consumers, and other interested groups contribute to the establishment of Voluntary Product Standards. These groups initiate and participate in the development of the standards, provide technical or other counsel as appropriate, promote the use of and support for the standards, and assist in keeping them current with respect to advancing technology and marketing practices.

USE OF VOLUNTARY PRODUCT STANDARDS

The use of DOC Voluntary Product Standards is voluntary. NIST has no regulatory power in the enforcement of their provisions; however, since the standards represent a consensus of interested groups, their provisions are likely to become established as trade customs.

The benefits derived from a DOC Voluntary Product Standard are in direct proportion to their general recognition and actual use. Producers and distributors whose products meet the requirements of a DOC Voluntary Product Standard may refer to the standard in advertising and on labels to promote greater public understanding for confidence in their products. At times, purchasers may order products conforming to the requirements of a DOC Voluntary Product Standard.

Abstract

These standard covers performance requirements, adhesive bond performance, grades, panel construction and workmanship, dimensions and tolerances, marking, and moisture content of structural plywood. The standard classifies structural plywood by bond classification, span rating, performance category, and grade. It provides test methods, a glossary of trade terms and definitions, and a quality certification program whereby agencies inspect, sample, and test products for conformance to this standard. Information regarding industry practices for reinspection, history of the standard, labeling, and formaldehyde attributes are provided in nonmandatory appendices.

Keywords

Adhesive bond classification; certification; construction sheathing; dimensions and tolerances; marking; moisture content; performance requirements; span rating; performance category; structural plywood; test methods; voluntary standard.

Table of Contents

1. SCOPE 1

2. TERMINOLOGY 1

3 REFERENCE PUBLICATIONS 8

4. PLYWOOD CLASSIFICATION 9

4.1 General 9

4.2 Bond classification 9

4.3 Grade 9

5. REQUIREMENTS 9

5.1 General 9

5.2 Wood species 9

5.3 Synthetic repairs 11

5.4 Grade desription of veneers 11

5.5 Veneers and layers 17

5.6 Panel grades 18

5.7 Adhesive bond requirements for a panel or a lot 22

5.8 Panel constructions and workmanship 24

5.9 Scarf and finger jointed panels 36

5.10 Dimensional tolerances and squareness of panels 39

5.11 Moisture content 39

5.12 Loading or packing 39

6. SPECIMEN PREPARATION AND TESTING 39

6.1 Bond classification 39

6.2 Structural performance 44

7 GRADEMARKING AND CERTIFICATION 48

7.1 Certification 48

7.2 Qualified inspection and testing agency 48

7.3 Panel marking 49

7.4 Voiding marks 49

8 EFFECTIVE DATE 50

9 STANDING COMMITTEE 50

APPENDIX

A Species Grouping (mandatory) 51

B Reinspection Practices (nonmandatory) 54

C General Information and Comments on Current Edition (nonmandatory) 56

D Recommend thickness labels (nonmandatory) 58

E Labeling Guidelines Based on the Uniform Packaging and Labeling Regulations of NIST Handbook 130 and Handbook 133 (nonmandatory) 60

F Formaldehyde (nonmandatory) 61

VOLUNTARY PRODUCT STANDARD PS 1-19
STRUCTURAL PLYWOOD

Effective December 1, 2019

(This Standard, which was initiated by APA - The Engineered Wood Association [formerly the American Plywood Association], has been developed under the *Procedures for the Development of Voluntary Product Standards* of the U.S. Department of Commerce as a revision of PS 1-09, *Structural Plywood*.)

1. SCOPE

1.1 This Voluntary Product Standard establishes requirements for the principal types and grades of structural plywood and provides a basis for common understanding among producers, distributors, and users of the product.

1.2 This Standard covers the wood species, veneer grading, adhesive bonds, panel construction and workmanship, dimensions and tolerances, marking, moisture content, and packaging of structural plywood intended for construction and industrial uses.

1.3 Included in this Standard are test methods to determine compliance and a glossary of trade terms and definitions. A quality certification program is provided whereby qualified testing agencies inspect, sample, and test products identified as complying with this Standard. Information on species grouping is provided in Appendix A. Information on reinspecting practices is provided in Appendix B. Information on the maintenance, history, and current edition of the Standard is provided in Appendix C. Recommended thickness labeling is provided in Appendix D. Information on labeling regulations from NIST Handbook 130 and NIST Handbook 133 are provided in Appendix E. Information on formaldehyde emissions is provided in Appendix F.

1.4 This Voluntary Product Standard incorporates the International System of Units (SI) as well as U.S. customary units of measurement. In conversion of U.S. customary units where exact placement is not an issue, such as nail spacing, approximate conversions to SI units are made to yield more easily recognizable numbers. In critical matters, such as panel thickness, more precise conversions to SI units are made. For nominal U.S. customary units, actual dimensions in SI units are given. The values given in SI units are the standard. The values in parentheses are for information only.

1.5 Advisory notes in this Standard and Appendices B through F are informational and shall not be considered mandatory.

2. TERMINOLOGY

2.1 Back

Back of a plywood panel — The side of a panel that is of lower veneer quality on any panel whose outer plies (front and back) are of different veneer grades.

Back ply of a plywood panel — The outer veneer on the back side of a panel.

2.2 Bond classifications
Plywood is rated as Exposure 1 or Exterior bond classification. (See Sections 2.20 and 2.21.)

2.3 Borer holes
Voids made by wood-boring insects, such as grubs or worms.

2.4 Broken grain
A separation on veneer surface between annual rings, such as leafing or shelling.

2.5 Butt joint
A straight joint in which the interface is perpendicular to the panel face. An end butt joint is perpendicular to the grain.

2.6 Centers
Inner layers whose grain direction runs parallel to that of the outer plies. Some centers consist of parallel laminated plies.

2.7 Center gap
See Section 2.16.

2.8 Characteristics, growth
Discolorations, pitch streaks and knots that naturally occur in wood.

2.9 Characteristics, open
Irregularities such as splits, open joints, knotholes, loose knots, or wane.

2.10 Check
A lengthwise separation of wood fibers, usually extending across the rings of annual growth, caused chiefly by strains produced in seasoning.

2.11 Class I, II
Term used to identify different classifications of concrete form panels. (See Section 5.6.4.)

2.12 Construction (panel construction)
Term referring to detailed manner in which veneers are assembled and/or thickness of veneer used, e.g., "4-ply 3-layer construction," "2.5 mm (1/10 in) face and back," etc.

2.13 Core
See Section 2.15.

2.14 Critical Section
A rectangular area measuring 305 mm (12 in) along the grain by full panel width that contains a knot or knothole requiring additional consideration. (See Sections 5.4.4.3, 5.4.6.2 and 5.4.6.3)

2.15 Crossband
Inner, or core, plies whose grain direction runs perpendicular to that of the outer plies. Some crossbands consist of parallel laminated plies.

2.16 Crossband gap and center gap
An open joint extending through or partially through a panel, which results when crossband or center veneers are not tightly butted.

2.17 Delamination

A visible separation between plies that normally receive adhesive at their interface and are firmly contacted in the pressing operation. Wood characteristics such as checking, leafing, splitting and broken grain are not to be construed as delamination.

2.17.1 Knotholes, pitch pockets, splits and gaps

For purpose of evaluation of delamination, areas coinciding with open knotholes, pitch pockets, splits, gaps, and other voids or characteristics permitted in the panel grade are not considered in evaluating ply separation.

2.17.2 Delamination of Exposure 1 Panels

In evaluating Exposure 1 panels, delamination in any bond line is not to exceed 19.4 cm^2 (3 in^2) except where directly attributable to characteristics permitted in the grade as follows:

Delamination associated with:

(a) Knots and knotholes — Not to exceed the size of the knot or knothole plus a surrounding band not wider than 19.1 mm (3/4 in).

(b) All other forms of permissible characteristics — Not to exceed the size of the characteristic.

2.17.3 Delamination of Exterior Panels

For purposes of evaluation of Exterior panels for ply separation, the area coinciding with the grade characteristics noted in Section 2.17.1 is considered, and a panel is considered delaminated if visible ply separation at a single bond line in such area exceeds 19.4 cm^2 (3 in^2).

2.18 Depression

A minor disruption of the panel surface with a smooth boundary.

2.19 Edge splits

Wedge-shaped openings in the inner plies caused by splitting of the veneer before pressing.

2.20 Exposure 1

Bond classification for panels suitable for uses not permanently exposed to the weather. Panels classified as Exposure 1 are intended to resist the effects of moisture on structural performance as may occur during construction, or other conditions of similar severity.

2.21 Exterior

Bond classification for panels suitable for repeated wetting and redrying or long-term exposure to weather or other conditions of similar severity.

2.22 Face

Face of the plywood panel — The side of a panel that is of higher veneer quality on any panel whose outer plies (front and back) are of different veneer grades; either side of a panel where the grading rules draw no distinction between outer plies.

Face ply of a panel — The outer veneer on the face of a panel.

2.23 Finger joint
Term indicating the method by which panels or sections of panels have been joined to create longer lengths or widths by means of a well-bonded series of sloped scarf cuts resembling fingers.

2.24 Group
Term used to classify species or panels covered by this Standard. Species covered by this Standard are classified as Groups 1, 2, 3, 4, and 5. See Table 1 and Appendix A for listing of species in individual groups. Section 5.8.7 provides procedures for grouping of panels with species not listed in Table 1.

2.25 Heartwood
Nonactive core of a log generally distinguishable from the outer portion (sapwood) by its darker color.

2.26 Indent
A disruption of the panel surface with sharp or distinct edges.

2.27 Inner plies
Plies other than face or back plies in a panel construction. Sub-face, sub-back, crossband and center are classed as inner plies.

2.28 Jointed inner plies
Crossband and center veneers with edges machine-squared to permit tightest possible layup.

2.29 Knot
Natural characteristic of wood that occurs where a branch base is embedded in the trunk of a tree. Generally the size of a knot is distinguishable by (1) a difference in color of limb wood and surrounding trunk wood; (2) an abrupt change in growth ring width between knot and bordering trunk wood; and (3) a diameter of circular or oval shape described by points where checks on the face of a knot that extend radially from its center to its side experience an abrupt change in direction.

2.30 Knotholes
Voids produced by the dropping of knots from the wood in which they were originally embedded.

2.31 Lap
A condition where the veneers in the same ply are so placed that one piece overlaps the other.

2.32 Layer
A single veneer ply or two or more plies laminated with grain direction parallel. Two or more plies laminated with grain direction parallel is a "parallel laminated layer."

2.33 Lot
Any number of panels considered as a single group for evaluating conformance to this Standard.

2.34 Major panel axis
The direction parallel to the grain of the face and back plies.

2.35 Mill specification
A manufacturing specification based on product evaluation to be used for quality assurance purposes by the manufacturer and the qualified testing agency as defined in Section 7.2. (See Sections 5.8.6.5. and 5.8.7.3.)

2.36 Moisture content
The weight of the water in wood expressed as a percent of the weight of the oven-dry wood. (See Section 6.1.4.)

2.37 Moisture resistant adhesive
Adhesive capable of bonding plywood in a manner to satisfy the bond classification requirements of this Standard.

2.38 Panel thickness
Designated thickness subject to tolerances specified in this Standard. See Section 5.10.2 for thickness tolerances. See Section 2.40 for definition of Performance Category.

2.39 Patches
Inserts of sound wood or synthetic material in veneers or panels for replacing characteristics (open or growth). "Boat" patches are oval-shaped with sides tapering in each direction to a point or to a small rounded end. “Compound Boat” patches have multiple rounded or pointed ends. "Router" patches have parallel sides and rounded ends. "Sled" patches are rectangular with feathered ends.

2.40 Performance Category
A panel designation related to the panel thickness range that is linked to the nominal panel thickness designations used in the International Building Code (IBC) and International Residential Code (IRC). For purposes of labeling, as defined in Section 7.3, abbreviations PERF CAT, CAT or Category are permitted.

ADVISORY NOTE: The IRC and IBC specify a minimum 3/8 Performance Category for wall sheathing.

2.41 Performance testing
Tests that evaluate panel attributes typically required in the end-use applications as defined in this Standard.

2.42 Pitch pocket
A well-defined opening between rings of annual growth, usually containing, or which has contained, pitch, either solid or liquid.

2.43 Pitch streak
A localized accumulation of resin in coniferous woods which permeates the cells forming resin soaks, patches, or streaks.

2.44 Plugs
Sound wood of various shapes, including among others, circular and dog-bone, for replacing portions of veneers. Also, synthetic plugs used to fill openings and provide a smooth, level, durable surface. Plugs usually are held in veneer by friction until veneers are bonded into plywood.

2.45 Plugged inner plies (also referred to as solid inner plies.)
Refers to C Plugged crossband and centers and additional limitations, as given in Section 5.8.1.

2.46 Ply
A single veneer lamina in a bonded plywood panel. (See also 2.32.)

2.47 Plywood
Plywood is a panel built up of sheets of veneer called plies, united under pressure by a bonding agent to create a panel with an adhesive bond between plies as strong as or stronger than, the wood. Plywood is constructed of an odd number of layers with grain of adjacent layers perpendicular. Layers consist of a single ply or two or more plies laminated with parallel grain direction. Outer layers and all odd-numbered layers generally have the grain direction oriented parallel to the long dimension of the panel. The layers with alternating grain direction equalize strains, reduce splitting, and minimize dimensional change and warping of the panel.

2.48 Plywood classification
Plywood is classified by bond classification and grade. (See Section 4.)

2.49 Prescriptive specification
A specification based upon manufacturing parameters that define the approved product.

2.50 Reference value
The numerical value established for the mill specification for a given mechanical or physical property.

2.51 Repair
Any patch plug or shim.

2.52 Rough grain
Grain characteristics which prevent sanding to a smooth surface.

2.53 Sapwood
The living wood of lighter color occurring in the outer portion of a log. Sometimes referred to as "sap."

2.54 Scarfed joint
A term indicating the method by which panels or veneer, or sections of panels or veneer, have been joined to create longer lengths or widths by means of a well-bonded, sloped cut.

2.55 Shim
A long, narrow repair of wood or suitable synthetic not more than 4.8 mm (3/16 in) wide.

2.56 Shop-cutting panel
Panel which has been rejected as not conforming to a standard grade because of deficiencies, other than adhesive bond quality, which prevent it from meeting the requirements of this Standard. Blistered panels are not permitted within the category of “shop-cutting panel.” Localized delamination occurring as a result of a deficiency is permitted. Shop-cutting panels are suitable for cut-up use where cutting eliminates the deficiency in the portion of the panel salvaged. The salvageable area shall be at least 85% of the area of the panel. Such a panel must be identified with a separate mark as specified in Section 7.4.

2.57 Sized for Spacing
An optional panel mark indicating that the panel manufacturer has sized the panel to allow for industry recommended panel installation spacing.

2.58 Span rating
An index number, based on customary inch units, that identifies the recommended maximum center-to-center support spacing, or “on-center” (o.c.) spacing, for the specified end use under normal use conditions. Spans are defined for end uses such as roof, subfloor, and single floor. As a matter of convention, spans are typically specified by a single index number for single floor (Floor 24 o.c.), while roof and subfloor are often combined in a fractional format. For example, a span rating of 32/16 designates a roof span of 32 inches and a subfloor span of 16 inches. As a matter of convention, a span rating of 20 is designated for spans of 19.2 inch.

2.59 Split
Lengthwise separation of wood fibers completely through the veneer, caused chiefly by the manufacturing process or handling.

2.60 Sub-face (sub-back)
The ply adjacent to the exposed face (or back) of a parallel laminated outer layer.

2.61 Touch-sanding
A sizing operation consisting of a light surface sanding to thickness dimension in a sander. Sander skips to any degree are admissible.

2.62 Veneer
Thin sheets of wood of which plywood is made. Also referred to as "plies" in the bonded panel.

2.63 Wane
Thin to open areas in veneer sheets that result from outer log surface irregularities. Some wane areas contain bark inclusions. For grading, wane is classed as an open characteristic.

2.64 White pocket
A form of fungal decay (*Fomes pini*) that attacks most conifers but has never been known to develop in wood in service. In plywood manufacture, routine drying of veneer effectively removes any possibility of the fungus surviving. Also known as white speck.

2.64.1 Light white pocket
Advanced beyond incipient or stain stage to a point where pockets are present and plainly visible, *mostly* small and filled with white cellulose; generally distributed with no heavy concentrations; pockets for the most part separate and distinct; few to no holes through the veneer.

2.64.2 Heavy white pocket
Contains a great number of pockets, in dense concentrations, running together and at times appearing continuous; holes extend through the veneer but wood between pockets appears firm. At any cross section extending across the width of the affected area, sufficient wood fiber shall be present to develop not less than 40% of the strength of clear veneer. Brown cubicle and similar forms of decay which have caused the wood to crumble are prohibited.

2.65 Wood failure (percent)

The area of wood fiber remaining at the bond line following completion of the specified shear test. Determination is by means of visual examination and expressed as a percent of the test area.

2.66 Working Face

A face and/or back of a plywood panel that has an overlay system that meets a defined MDO or HDO grade (see section 5.6.7).

3. REFERENCE PUBLICATIONS [1]

ASTM E661-03 (2015) *Test Method for Performance of Wood and Wood-Based Floor and Roof Sheathing Under Concentrated Static and Impact Loads.*

ASTM D2555-17 *Test Methods for Establishing Clear Wood Strength Values.*

ASTM D2718-18 *Test Method for Structural Panels in Planar Shear (Rolling Shear).*

ASTM D2719-13 *Test Methods for Structural Panels in Shear Through-the-Thickness.*

ASTM D2915-17 *Standard Practice for Evaluating Allowable Properties for Grades of Structural Lumber.*

ASTM D3043-17 *Methods of Testing Structural Panels in Flexure.*

ASTM D5266-13 *Standard Practice for Estimating the Percentage of Wood Failure in Adhesive Bonded Joints.*

ASTM D906-98 (2017) *Standard Test Method for Strength Properties of Adhesives in Plywood Type Construction in Shear by Tension Loading.*

International Building Code® (IBC). International Code Council. Country Club Hills, IL.

International Residential Code® for One- and Two-Family Dwellings (IRC). International Code Council. Country Club Hills, IL.

PS 2-18 *Performance Standard for Wood Structural Panels.*

ISO/IEC 17020 *Conformity Assessment – Requirements for the Operation of Various Types of Bodies Performing Inspection.*

ISO/IEC 17025 *General Requirements for the Competence of Testing and Calibration Laboratories.*

ISO/IEC 17065 *Conformity Assessment – Requirements for bodies certifying products, processes and services.*

---

[1] Copies of the ASTM publications are available from ASTM International, 100 Barr Harbor Drive, PO Box C700, West Conshohocken, PA 19428-2959, www.astm.org.

4. PLYWOOD CLASSIFICATION

4.1 General
The plywood covered by this Standard is classified by bond classification and by grade.

4.2 Bond classification
The plywood covered by this Standard is classified as either Exposure 1 or Exterior. Each classification is a function of veneer grade and adhesive performance. The bond classification is related to the moisture resistance of the adhesive bond under intended end-use conditions and does not relate to the physical (erosion, ultraviolet, etc.) or biological (mold, fungal decay, insect, etc.) resistance of the panel.

4.2.1 Exposure 1 plywood
Adhesive performance requirements for Exposure 1 plywood are provided in Section 5.7.1.

4.2.2 Exterior plywood
Adhesive performance requirements for Exterior plywood are provided in Section 5.7.2.

4.3 Grade
Within each bond classification, there are a number of panel grades based on the grade of the veneers and the panel construction. (See Table 2 for Exposure 1 grades and Table 3 for Exterior grades.)

5. REQUIREMENTS

5.1 General
All plywood panels represented as conforming to this Standard shall meet or exceed all applicable requirements set forth herein. Test methods are given in Section 6. All terms shall be as defined in Section 2. Requirements for trademarking and certification shall be as provided in Section 7.

5.2 Wood species

5.2.1 Species groups
For the purpose of this Standard, species shall be any softwood or hardwood species or trade groups listed in Table 1 and other species meeting the requirements of Sections 5.2.3 or 5.2.4. For species grouping purposes, species listed in Table 1 but grown in a different geographic region shall be evaluated in accordance with Appendix A. For inclusion in Table 1, unlisted species shall be evaluated in accordance with Appendix A.

5.2.1.1 Species segregation
Species which cannot be distinguished in veneer form from similar species shall be classed as the largest numbered species group applicable (Group 4 is larger numbered than Group 1) unless the manufacturer provides valid evidence to the qualified inspection and testing agency that the species are properly segregated. Such segregation shall be in the form of separation prior to peeling, mechanical testing for performance capability, or other means approved by the qualified inspection and testing agency.

5.2.2 Species for faces and backs
Unless evaluated in accordance with Section 5.2.4, the species of face and back plies shall be from any group listed in Table 1. When a face or back is made of more than one piece, the entire ply shall be of the same species. When outer layers consist of two or more plies, the

outer or exposed plies are classified as faces (face plies) or backs (back plies) and the unexposed plies (sub-faces and sub-backs) are classified as inner plies, in terms of species requirements as provided in Section 5.2.3. Requirements for identification of all panels are given in Section 7.3.

TABLE 1. CLASSIFICATION OF SPECIES[a]

Group 1	Group 2		Group 3	Group 4	Group 5
North American Species – Applicable to trees grown in North America					
Beech, American Birch Sweet Yellow Douglas-fir [b] Larch, Western Maple, Sugar Pine, Southern Loblolly Longleaf Shortleaf Slash Tanoak	Cedar, Port Orford Cypress Douglas-fir [b] Fir Balsam California Red Grand Noble Pacific Silver White Hemlock, Western Maple, Black	Pine Pond Red Virginia Western White Spruce Black Red Sitka Sweetgum Tamarack Yellow Poplar	Alder, Red Birch, Paper Cedar, Alaska Fir, Subalpine Hemlock, Eastern Maple, Bigleaf Pine Jack Lodgepole Ponderosa Spruce Redwood Spruce Engelmann White	Aspen Bigtooth Quaking Cedar Incense Western Red Cottonwood Eastern Black (W. Poplar) Pine Eastern White Sugar	Basswood Poplar, Balsam
Non North American Species					
Apitong[c][d] Kapur[c] Keruing[c][d] Pine Caribbean Ocote	Lauan Almon Bagtikan Mayapis Red Lauan Tangile White Lauan	Mengkulang[c] Meranti, Red[c][e] Mersawa[c]		Cativo	

[a] Table 1 species classified in accordance with ASTM D 2555 as discussed in Appendix A. The species groupings are only valid for species grown in the regions referenced in Appendix A. (See Section 5.2.1.)

[b] Douglas-fir from trees grown in the states of Washington, Oregon, California, Idaho, Montana, Wyoming, and the Canadian Provinces of Alberta and British Columbia shall be classed as Group 1 Douglas-fir. Douglas-fir from trees grown in the states of Nevada, Utah, Colorado, Arizona and New Mexico shall be classed as Group 2 Douglas-fir.

[c] Each of these names represents a trade group of woods consisting of a number of closely related species.

[d] Species from the genus Dipterocarpus marketed collectively: Apitong if originating in the Philippines, Keruing if originating in Malaysia or Indonesia.

[e] Red Meranti shall be limited to species having a specific gravity of 0.41 or more based on green volume and oven dry weight.

5.2.3 Species for inner plies

5.2.3.1 Inner ply species group

Unless otherwise permitted in Section 5.2.3.2 or 5.2.4, inner plies of Groups 1, 2, 3 or 4 panels shall be of any species listed in Groups 1, 2, 3 or 4 in Table 1. Inner plies of Group 5 panels are permitted to be any species listed in Table 1.

5.2.3.2 Inner ply specific gravity

Inner plies of all panels shall also be permitted to be of any softwood species or any hardwood species having a published average specific gravity value of 0.41 or more based on green volume and oven dry weight. The U.S. Forest Products Laboratory shall be considered as final evaluator of published specific gravity data.

5.2.4 Species classified by testing

Species not listed in Table 1 or otherwise not covered by the provisions of Section 5.2 shall be qualified for use by panel performance testing in accordance with Section 5.8.6 for span-rated panels or with Section 5.8.7 for other panels except concrete form, Marine and Structural I grades. For panel marking purposes, re-classification of Group designation for species listed in Table 1 by panel performance testing in accordance with Section 5.8.7 is permitted.

5.3 Synthetic repairs

5.3.1 Synthetic fillers

Use of synthetic fillers shall be limited to the repair of minor characteristics as specified. Synthetic fillers shall be approved by the qualified testing and inspection agency.

5.3.2 Synthetic shims, patches, and plugs

These repairs shall completely fill kerfs or voids; shall present a smooth, level surface; and shall not crack, shrink, or lose their bond. Performance of synthetic shims, patches, and plugs under normal conditions of service shall be comparable to that of wood repairs. The equivalency shall be established by the qualified testing and inspection agency.

5.4 Grade description of veneers

All veneers in the finished plywood panel shall conform to one of the grade requirements listed in Sections 5.4.1 through 5.4.6. Unless otherwise stated, these requirements apply to 1220 mm by 2440 mm (48 x 96 in) panels and are proportionate for other sizes. Grade N is the highest classification. For grading purposes, depressions (see Section 2.18) shall be considered as rough grain.

5.4.1 Grade N veneer (intended for natural finish)

5.4.1.1 General

Grade N veneer shall be smoothly cut 100% heartwood or 100% sapwood, free from knots, knotholes, pitch pockets, open splits, other open characteristics, and stain. The veneer shall consist of not more than two pieces in 1220 mm (48 in) widths and not more than three pieces in wider panels, and shall be well matched for color and grain. When sanding is required (see Tables 2 and 3) panels shall be sanded and shall permit no sander skips.

Synthetic fillers shall be permitted to fill:

(a) Small cracks or checks not more than 0.8 mm (1/32 in) wide.

(b) Small splits or openings up to 1.6 mm (1/16 in) wide if not exceeding 50.8 mm (2 in) in length.

(c) Small chipped areas or openings not more than 3.2 mm wide by 6.4 mm long (1/8 inch x 1/4 inch).

5.4.1.2 Growth characteristics

Where pitch streaks occur, each shall average not more than 9.5 mm (3/8 in) in width and shall blend with the color of the wood.

5.4.1.3 Repairs

Repairs shall be of wood, neatly made, and parallel to grain. They shall be limited to a total of six in number and be well matched for color and grain.

Patches shall be limited to three "router" patches not exceeding 25.4 mm (1 in) in width and 88.9 mm (3-1/2 in) in length. There shall be no overlapping.

Shims shall not exceed 4.8 mm (3/16 in) in width or 305 mm (12 in) in length and shall occur only at the ends of the panel.

5.4.2 Grade A veneer (suitable for painting)

5.4.2.1 General

Grade A veneer shall be firm, smoothly cut, and free of knots, pitch pockets, open splits, and other open characteristics and well joined when of more than one piece. When sanding is required (see Tables 2 and 3) panels shall be sanded and shall permit no sander skips.

Synthetic fillers shall only be used to fill:

(a) In Exterior panels: small cracks or checks not more than 0.8 mm (1/32 in) wide; small splits or openings up to 1.6 mm (1/16 in) wide, if not exceeding 50.8 mm (2 in) in length; small chipped areas or openings not more than 3.2 mm (1/8 in) wide by 6.4 mm (1/4 in) long.

(b) In Exposure 1 panels: small cracks or checks not more than 4.8 mm (3/16 in) wide; openings or depressions up to 12.7 mm (1/2 in) wide by 50.8 mm (2 in) long or equivalent area.

5.4.2.2 Growth characteristics

Where pitch streaks occur, each shall average not more than 9.5 mm (3/8 in) in width and shall blend with the color of the wood. Sapwood and discolorations to any degree shall be permitted.

5.4.2.3 Repairs

Repairs shall be of wood or synthetic patching material, neatly made, parallel to grain and limited to a total of 18 in number, excluding shims.

5.4.2.4 Patches

Patches, when of wood, shall be "boat," “compound boat,” "router," or "sled" type. The radius of ends of boat patches and compound boat patches shall not exceed 9.5 mm (3/8 in).

A single wood patch shall be no larger than 57.2 mm x 114 mm (2-1/4 in x 4-1/2 in).

Multiple wood repairs shall consist of not more than two patches, neither of which shall exceed 178 mm (7 in) in length if either is wider than 25.4 mm (1 in), except that one multiple repair consisting of three die-cut veneer patches shall be permitted.

For a multiple repair consisting of three patches across the width of the panel, the repaired area shall not exceed a width and length of 152 mm x 114 mm (6 in x 4-1/2 in)

For a multiple repair consisting of three patches along the length of the panel, the repaired area shall not exceed a width and length of 57.2 mm x 267 mm (2-1/4 in x 10-1/2 in)

Synthetic repairs are limited to the same repair areas as wood patches and shall be counted as one, two or three patches depending on the area repaired.

The repair of a split having a width not greater than 31.8 mm (1-1/4 in) and any length shall be considered one patch.

Shims shall not be used over or around patches or as multiple repairs.

5.4.3 Grade B veneer

5.4.3.1 General

Grade B veneer shall be solid and free from open characteristics and broken grain, except as permitted in Sections 5.4.3.1 through 5.4.3.4. Slightly rough grain shall be permitted.

Minor sanding and patching characteristics, including sander skips, shall not exceed 5% of panel area. See Tables 2 and 3 for sanding requirements.

Synthetic fillers shall only be used to fill:

(a) In Exterior panels: small splits or openings up to 1.6 mm (1/16 in) wide if not exceeding 50.8 mm (2 in) in length; small chipped areas or openings not more than 3.2 mm wide by 6.4 mm long (1/8 in x 1/4 in).

(b) In Exposure 1 panels: small cracks or checks not more than 4.8 mm (3/16 in) wide; openings or depressions up to 12.7 mm wide by 50.8 mm long (1/2 in x 2 in) or equivalent area.

5.4.3.2 Growth characteristics

Knots shall not exceed 25.4 mm (1 in) measured across the grain and shall be both sound and tight.

Where pitch streaks occur, they shall average not more than 25.4 mm (1 in) in width.

Discolorations to any degree shall be permitted.

5.4.3.3 Open characteristics

Splits shall not be wider than 0.8 mm (1/32 in).

Vertical borer holes shall not exceed 1.6 mm (1/16 in) in diameter and shall not exceed an average of one per 929 cm^2 (1 ft^2) in number.

Horizontal or surface worm and borer holes shall be limited to 1.6 mm (1/16 in) across, 25.4 mm (1 in) in length, and limited to 12 in number.

5.4.3.4 Repairs

Repairs shall be of wood or synthetic patching material and neatly made.

Wood veneer repairs shall be die cut. Wood panel repairs shall be "router" or "sled" type.

Wood repairs shall not exceed 76.2 mm (3 in) in width where occurring in multiple repairs, or 102 mm (4 in) in width where occurring singly.

Synthetic veneer repairs shall not exceed 102 mm (4 in) in width.

Synthetic panel repairs shall not exceed 57.2 mm (2-1/4 in) in width by any length, except that repaired areas not exceeding 152 mm in width by 114 mm in length (6 in x 4-1/2 in) shall be allowed.

Shims shall be permitted without limit.

5.4.4 Grade C veneer

5.4.4.1 General

Sanding characteristics shall not impair the strength or serviceability of the panel. See Tables 2 and 3 for sanding requirements.

5.4.4.2 Growth characteristics

Knots shall be tight and not more than 38.1 mm (1-1/2 in) across the grain.

Discolorations to any degree shall be permitted.

5.4.4.3 Open characteristics

Any number of knotholes up to 25.4 mm (1 in) shall be permitted. However, an occasional knothole more than 25.4 mm (1 in) but not more than 38.1 mm (1-1/2 in) measured across the grain shall be permitted subject to the following provision:

(a) Determine the Critical Section containing the knothole. (See Section 2.14.)

(b) Determine the aggregate width of all knots and knotholes occurring wholly within the Critical Section. Other open characteristics and growth characteristics are not included in this aggregate.

(c) The knothole is permitted if the aggregate width of all knots and knotholes in the Critical Section does not exceed 152 mm (6 in) in a 1220 mm (48 in) wide panel and proportionately for other panel widths.

Splits measured at a point 203 mm (8 in) from the end of the panel shall not exceed 12.7 mm (1/2 in) in width by 1/2 panel length or 9.5 mm (3/8 in) in width by any panel length, provided separation at one end does not exceed 1.6 mm (1/16 in) where split runs full panel length; however, the maximum width within 203 mm (8 in) of the end of the panel (open end of split) shall not exceed the maximum width of knotholes permitted within the grade.

Splits on panel faces and backs shall not exceed 6.4 mm (1/4 in) where located within 25.4 mm (1 in) of parallel panel edge.

Voids due to missing wood on panel faces and backs not otherwise specified above shall not exceed the maximum width of knotholes permitted in the grade and the length of such voids shall not exceed 152 mm (6 in).

Wane not exceeding 203 mm (8 in) in length and the width permitted for open characteristics shall be allowed, providing that where wane occurs at edges of veneer sheets, panel ply separation due to wane shall not exceed the limit equivalent to that permitted for short and narrow inner plies in Section 5.8.3 for sanded panels, or Section 5.8.4 for unsanded or touch-sanded panels.

5.4.4.4 Repairs

Repairs shall be wood or synthetic patching material, neatly made.

Wood veneer repairs shall be die cut. Wood panel repairs shall be "router" or "sled" type.

Wood repairs shall not exceed 76.2 mm (3 in) in width where occurring in multiple repairs, or 102 mm (4 in) in width where occurring singly.

Synthetic veneer repairs shall not exceed 102 mm (4 in) in width.

Synthetic panel repairs shall not exceed 57.2 mm (2-1/4 in) in width.

Shims shall be permitted without limit.

5.4.5 Grade C plugged veneer

Knotholes, worm and borer holes, and other open characteristics not larger than 6.4 mm (1/4 in) by 12.7 mm (1/2 in); sound and tight knots up to 38.1 mm (1-1/2 in) measured across the grain; splits up to 3.2 mm (1/8 in) wide; broken grain; pitch pockets, if solid and tight; plugs; patches and shims shall be permitted. Synthetic repairs in veneer shall not exceed 102 mm (4 in) in width. Synthetic panel repairs shall not exceed 57.2 mm (2-1/4 in) in width by any length, except that repaired areas not exceeding 152 mm (6 in) in width by 114 mm (4-1/2 in) in length shall be allowed. See Tables 2 and 3 for sanding requirements. Where grades having C Plugged face veneer are identified as fully sanded, sanding characteristics shall be the same as admitted under B grade. Sander skips to any degree shall be admissible in touch-sanded C Plugged veneer.

5.4.6 Grade D veneer

5.4.6.1 General

Except as otherwise required in Sections 5.4.6.2 through 5.4.6.4, any number of plugs, patches, shims, worm or borer holes, sanding characteristics, and other characteristics shall be permitted, provided they do not seriously impair the strength or serviceability of the panels.

5.4.6.2 Growth characteristics

Tight knots in inner plies shall be permitted.

In D grade faces or backs, any number of tight knots not larger than 63.5 mm (2-1/2 in) across the grain shall be permitted. However, an occasional tight knot larger than 63.5 mm (2-1/2 in) but not larger than 76.2 mm (3 in) measured across the grain, shall be permitted subject to the following provision:

(a) Determine the Critical Section containing the knot. (See Section 2.14.)

(b) Determine the aggregate width of all knots and knotholes occurring wholly within the Critical Section. Other open characteristics and growth characteristics are not included in this aggregate.

(c) The knot is permitted if the aggregate width of all knots and knotholes in the Critical Section does not exceed 254 mm (10 in) in a 1220 mm (48 in) wide panel and proportionately for other panel widths.

5.4.6.3 Open characteristics
Any number of knotholes up to 63.5 mm (2-1/2 in) across the grain shall be permitted. However, an occasional knothole larger than 63.5 mm (2-1/2 in) but not larger than 76.2 mm (3 in) measured across the grain shall be permitted subject to the following provision:

(a) Determine the Critical Section containing the knothole. (See Section 2.14)

(b) Determine the aggregate width of all knots and knotholes occurring wholly within the Critical Section. Other open characteristics and growth characteristics are not included in this aggregate.

(c) The knothole is permitted if the aggregate width of all knots and knotholes in the Critical Section does not exceed 254 mm (10 in) in a 1220 mm (48 in) wide panel and proportionately for other panel widths.

Knotholes in sanded panels shall not exceed 63.5 mm (2-1/2 in) across the grain in veneer thicker than 3.2 mm (1/8 in).

Knotholes shall not exceed 88.9 mm (3-1/2 in) across the grain in veneers at least two plies removed from the face or back plies of C-D, D-D and C-D Plugged grades having five or more plies.

Splits measured at a point 203 mm (8 in) from the end of the panel shall not exceed 25.4 mm (1 in) in width, tapering to not more than 1.6 mm (1/16 in) where split runs full panel length; however, the maximum width within 203 mm (8 in) of the end of the panel (open end of split) shall not exceed the maximum width of knotholes permitted within the grade.

Splits on panel faces and backs shall not exceed 6.4 mm (1/4 in) in width where located within 25.4 mm (1 in) of parallel panel edge.

Voids due to missing wood on panel backs not otherwise specified in Section 5.4.6.3 shall not exceed the maximum width of knotholes permitted in the grade and the length of such voids shall not exceed 152 mm (6 in).

Wane not exceeding 203 mm (8 in) in length and the width permitted for open characteristics is allowed, providing that where occurring at edges of veneer sheets, panel ply separation due to wane shall not exceed the limit equivalent to that permitted for short and narrow inner plies in Section 5.8.3 for sanded panels, or Section 5.8.4 for unsanded or touch-sanded panels.

5.4.6.4 White pocket
Any area 610 mm (24 in) wide across the grain and 305 mm (12 in) long, in which light or heavy white pocket occurs, shall contain not more than three of the following characteristics, in any combination:

(a) A 152 mm (6 in) width of heavy white pocket.

(b) A 305 mm (12 in) width of light white pocket.

(c) One knot or knothole, 38.1 mm (1-1/2 in) to 63.5 mm (2-1/2 in), or two knots or knotholes, 25.4 mm (1 in) to 38.1 mm (1-1/2 in). Knots or knotholes less than 25.4 mm (1 in) shall not be considered. Sizes of any knot or knothole shall be measured across the grain. Any repair in a white pocket area shall be considered for grading purposes as a knothole.

5.5 Veneers and layers

5.5.1 Veneer thickness

Except as provided for in the following paragraphs, veneer shall be 2.5 mm (1/10 in) or thicker in panels with Performance Category of 3/8 rough (unsanded) thickness or over; 2.1 mm (1/12 in) or thicker in panels with Performance Category of less than 3/8 rough (unsanded) thickness. In no case shall veneers used in face or back layers be thicker than 6.4 mm (1/4 in), or veneers used in inner layers be thicker than 7.9 mm (5/16 in).

Veneer of 2.1 mm (1/12 in) shall be permitted as crossbands in 5-ply, 5-layer panels with Performance Category of 15/32 and 1/2 and in parallel-laminated layers as provided for in 5.5.2.

Veneer of 1.6 mm (1/16 in) shall be permitted for any ply in 5-ply Exterior type panels with Performance Category of less than 15/32; as the center only in other 5-ply panels; and in a parallel laminated layer as provided for in Section 5.5.2.

Face and back veneers shall be a minimum thickness of 3.2 mm (1/8 in) for panels with Performance Category of 19/32 5/8, 3, 4, and 5-ply, 3-layer panels of C-D, C-D Plugged, C-C, C-C Plugged and Underlayment grades.

Further limitations on panel layup are provided in Section 5.8, Panel Constructions and Workmanship.

The average veneer thickness shall conform to the limitations given in this Standard within a tolerance of ± 5% of the specified nominal thickness measured dry before layup.

In lieu of veneer thickness requirements above, panels qualifying under workmanship provisions of Section 5.8 and performance testing in accordance with Section 5.8.6 or 5.8.7 shall be permitted.

5.5.2 Parallel laminated layers

Parallel-laminated outer layers shall only be used in C-C, C-D, D-D and Structural I C-C and C-D grades. Such layers shall consist of veneers 2.5 mm (1/10 in) or thicker in any combination not exceeding 6.4 mm (1/4 in) total layer thickness. The face and back plies or exposed plies of outer layers shall conform to the species group and grade requirements for faces and backs, respectively, of the panel grade. The unexposed plies of outer layers, or sub-face and sub-back plies, shall conform to the species group and grade requirements for inner plies of the panel grade as specified in Tables 2 and 3 and Section 5.6.5. The maximum split or gap in sub-faces and sub-backs shall be 6.4 mm (1/4 in) under the faces of Structural I C-C and C-D panels; 12.7 mm (1/2 in) under the faces of C-C, C-D and D-D grades, and 12.7 mm (1/2 in) under D backs.

Parallel-laminated inner layers in any grade shall consist of veneers 1.6 mm (1/16 in) or thicker in any thickness combination not exceeding 11.1 mm (7/16 in) total layer thickness. Individual plies in such layers shall conform to the species group and grade requirements for inner plies of the panel grade.

In lieu of veneer thickness requirements above, panels qualifying under workmanship provisions of Section 5.8 and performance testing in accordance with Section 5.8.6 or Section 5.8.7 shall be permitted.

TABLE 2. EXPOSURE 1 PLYWOOD GRADES (PERMITS D GRADE VENEER)

Panel Grade Designations	Minimum Veneer Quality			Surface
	Face	Back	Inner Plies	
N-N	N	N	C	Sanded 2 sides
N-A	N	A	C	Sanded 2 sides
N-B	N	B	C	Sanded 2 sides
N-D	N	D	D	Sanded 2 sides
A-A	A	A	D	Sanded 2 sides
A-B	A	B	D	Sanded 2 sides
A-D	A	D	D	Sanded 2 sides
B-B	B	B	D	Sanded 2 sides
B-D	B	D	D	Sanded 2 sides
Underlayment[a]	C Plugged	D	C & D	Touch-sanded
C-D Plugged	C Plugged	D	D	Touch-sanded
Structural I C-D		See 5.6.5		Unsanded[b]
Structural I C-D Plugged, Underlayment		See 5.6.5		Touch-sanded
C-D	C	D	D	Unsanded[b]
D-D[c]	D	D	D	Unsanded[b]

[a] See Section 5.6.3 and Table 5 for special limitations.
[b] See Section 5.8.4 for requirements.
[c] Applicable only to panels qualified through performance testing per Section 5.8.6 (plus Section 6.2.2.3 of PS 2-18) or PS 2-18.

5.5.3 Scarfed veneers

Scarfed veneers shall be permitted for any face, back, or inner ply except as provided in Section 5.9. Scarfed joints shall not have a slope steeper than 1 to 8. Veneer in the scarf area shall not contain characteristics which reduce its effective cross section by more than 20%. Veneer scarfed joints shall be bonded with a moisture resistant adhesive.

5.6 Panel grades

The standard combination of the veneers described in Section 5.4 assembled into the various panel grades shall be as provided in Tables 2 and 3, with the additional requirements provided in Sections 5.6.1 through 5.6.7. The grain direction of the outer layers shall be either parallel or perpendicular to the long dimension of the panel.

TABLE 3. EXTERIOR PLYWOOD GRADES[a] (DOES NOT PERMIT D GRADE VENEER)

Panel Grade Designations	Minimum Veneer Quality			Surface
	Face	Back	Inner Plies	
Marine (A-A, A-B, B-B, HDO, MDO)	See 5.6.1			See regular grades
Special Exterior (A-A, A-B, B-B, HDO, MDO)	See 5.6.6			See regular grades
A-A	A	A	C	Sanded 2 sides
A-B	A	B	C	Sanded 2 sides
A-C	A	C	C	Sanded 2 sides
B-B (concrete form)	B	B	C	See 5.6.4
B-C (concrete form)	B	C	C	See 5.6.4
B-B	B	B	C	Sanded 2 sides
B-C	B	C	C	Sanded 2 sides
C-C Plugged[b]	C Plugged	C	C	Touch-sanded
C-C	C	C	C	Unsanded[c]
HDO-Industrial A-A, B-B, B-C			C [d]	
HDO-Concrete Form[e] A-A, B-B, B-C			C	
MDO-General B-B, B-C			C	
MDO-Concrete Form[e] B-B, B-C			C	
Special Overlays	C	C	C	—

[a] Available also in Structural I classification as provided in Section 5.6.5.
[b] See Section 5.6.3 and Table 5 for special limitations.
[c] See Section 5.8.4 for requirements.
[d] C Plugged for HDO-Industrial when intended for sign applications
[e] For more clarification on concrete form grades, see Section 5.6.4.

5.6.1 Marine

Marine grades shall meet the requirements of Exterior plywood and shall be of one of the following grades: A-A, A-B, B-B, High Density Overlay, or Medium Density Overlay, all as modified in Sections 5.6.1.1 through 5.6.1.3.

5.6.1.1 Species

Only Group 1 Douglas-fir and Western Larch veneers shall be used.

5.6.1.2 Veneers

Grade A faces shall be limited to a total of nine single wood repairs in a 1220 mm by 2440 mm (48 x 96 in) sheet, or to a proportionate number in any other size as manufactured.

All inner plies shall be B grade or better and shall be full length and width.

All wood repairs shall be bonded with an adhesive meeting the Exterior performance requirements of Section 5.7.2 and, in addition, shall be set in the panel using a technique involving both heat and pressure.

When the inner plies consist of two or more pieces of veneer, the edges shall be straight and square, and shall not overlap.

5.6.1.3 Crossband gaps and edge splits

Neither edge of a panel shall have any crossband gap or edge split in excess of 3.2 mm (1/8 in) wide. Crossband gaps and edge splits per 2440 mm (96 in) of crossband ply shall not exceed four in number. End splits and gaps on either end of a panel shall not exceed 3.2 mm (1/8 in) in aggregate width.

There shall be no filling of crossband gaps and edge splits.

5.6.2 Decorative panels

Specialty panels with decorative face and veneer treatments which, except for the special face treatment, meet all of the requirements of this Standard, including veneer qualities, adhesive bond performance and workmanship, shall be considered as conforming to this Standard. All grades in Tables 2 and 3 shall be permitted to be manufactured as decorative grades.

An occasional butt joint used for decorative effect in veneer shall have a maximum width of 152 mm (6 inches) and shall be limited to one panel face. Where butt joints occur, the aggregate width of all knots and knotholes and two-thirds the aggregate width of all repairs, including butt joints, shall not exceed 152 mm (6 in) in any area 305 mm (12 in) along the grain by 1220 mm (48 in) wide or proportionately for other widths.

5.6.3 Underlayment

Underlayment is plywood produced with touch sanded faces to the following requirements.

5.6.3.1 Exposure 1 Underlayment.

Face veneer shall be C-plugged grade 2.5 mm (1/10 in) or thicker before sanding. The veneer immediately adjacent to the face ply shall be C grade or better with no open characteristics over 25.4 mm (1 in) across the grain; except that veneer immediately adjacent to the face ply shall be permitted to be D grade with open characteristics up to 63.5 mm (2-1/2 in) across the grain provided the face veneer is of Group 1 or 2 species of 4.2 mm (1/6 in) minimum thickness before sanding. Also see Table 5 requirements.

5.6.3.2 Exterior Underlayment (C-C plugged or better).

Face veneer shall be C-plugged grade or better 2.5 mm (1/10 in) or thicker before sanding. The veneer immediately adjacent to the face ply shall be C grade or better with no open characteristics over 25.4 mm (1 in) across the grain except that veneer immediately adjacent to the face ply shall be permitted to be C grade with open characteristics up to 38.1 mm (1-1/2 in) across the grain, provided the face veneer is of Group 1 or 2 species of 4.2 mm (1/6 in) minimum thickness before sanding. Also see Table 5 requirements.

5.6.4 Concrete form panels

Face veneers shall not be less than B grade and back veneers shall not be less than C grade. The face and back veneers shall be of the same species group. The face and back veneers shall be designated in the trademark. Inner plies shall be not less than "C" grade. This grade of plywood is produced in two classes, and panels of each class shall be identified accordingly. Non-overlaid panels shall be sanded two sides and have a mill-applied release agent unless otherwise agreed upon between buyer and seller. For non-overlaid panels, Western Larch shall be excluded from use in the face plies of concrete form plywood due to the excessive wood sugars that prohibit proper curing of concrete. Species shall be further limited as follows and are applicable also to High Density Overlaid Exterior and Medium Density Overlaid Exterior concrete form panels:

(a) Class I — Faces of Group 1 species, crossband of Group 1 or Group 2 species, and centers of Group 1, 2, 3, or 4 species.

(b) Class II — Faces of Group 1 or Group 2 species, and crossband and centers of Group 1, 2, 3, or 4 species; or, faces of Group 3 species of 3.2 mm (1/8 in) minimum thickness before sanding, crossband of Group 1, 2, or 3 species, and centers of Group 1, 2, 3, or 4 species.

5.6.5 Structural I panels

These panels are especially designed for engineered applications such as structural components where design properties, including tension, compression, shear, cross-panel flexural properties and nail bearing are of significant importance. Structural I shall be produced as C-D, C-D Plugged, Underlayment or any Exterior grade (see Table 3). Structural I panels shall meet all other requirements in this Standard for the applicable types and grades and the additional requirements below:

(a) All face, back and inner plies shall be Group 1 species as listed in Table 1

(b) Special limitations applying to Structural I (C-D, C-D Plugged, Underlayment) grade panels are:

- In D grade veneers, white pocket in any area larger than the size of the largest knothole, pitch pocket or split specifically permitted in D grade shall not be permitted in any ply
- Sound tight knots in D grade shall not exceed 63.5 mm (2-1/2 in) measured across the grain, except as provided in Table 5
- Plugs, including multiple repairs, shall not exceed 102 mm (4 in) in width.

5.6.6 Special Exterior

An Exterior panel that is produced from any species covered by this Standard. Except in regard to species, it shall meet all of the requirements for Marine panels (see Section 5.6.1) and be produced in one of the following grades: A-A, A-B, B-B, High Density Overlay, or Medium Density Overlay.

5.6.7 Overlays

For overlaid plywood, the grade designation for face and back, as given in Table 3, refers to the veneer directly beneath the overlay. All overlaid plywood shall be overlaid on two sides unless identified as having one working face as specified in section 7.3.c. When only one side is overlaid (or when a backer sheet is applied), the back shall be C or better. The surface of overlaid plywood shall be smooth, or uniformly textured, although some evidence of underlying grain shall be permitted.

5.6.7.1 High Density Overlay – Concrete Form

HDO Concrete Form plywood shall be manufactured with thermosetting phenolic resin impregnated cellulose-fiber sheet or sheets bonded to the working face. The overlay layer shall consist of a sheet or sheets, containing not less than 52% phenolic resin content, based on the volatile-free weight of fiber and resin. The thickness of resin-impregnated materials for each working face shall be not less than 0.30 mm (0.012 in) thick before pressing and shall weigh not less than 290 g per m^2 (60 pounds per 1000 ft^2) in the ready-to-use condition. When the overlay layer is composed of MDO cushion sheet and HDO cap sheet (or sheets), the MDO sheet shall be not less than 34% phenolic resin content based on the volatile-free weight of resin and fiber, exclusive of bond line.

5.6.7.2 High Density Overlay – Industrial

HDO Industrial plywood is typically used for highway signs or industrial applications. HDO-Industrial plywood shall be manufactured with thermosetting phenolic resin impregnated cellulose-fiber sheet or sheets bonded to the working face. The overlay layer shall consist of a sheet or sheets, containing not less than 45% phenolic resin content based on the volatile-free weight of fiber and resin. The thickness of resin-impregnated materials for each working face

shall be not less than 0.30 mm (0.012 in) thick before pressing and shall weigh not less than 290 g per m^2 (60 pounds per 1000 ft^2) in the ready-to-use condition. When the overlay layer is composed of MDO cushion sheet and HDO cap sheet (or sheets), the MDO sheet shall be not less than 34% resin content based on the volatile-free weight of resin and fiber, exclusive of bond line.

5.6.7.3 Medium Density Overlay – Concrete Form
MDO Concrete Form plywood shall be manufactured with thermosetting phenolic resin impregnated cellulose-fiber sheet or sheets bonded to the working face. The overlay layer shall consist of a sheet or sheets, containing not less than 34% phenolic resin content based on the volatile-free weight of fiber and resin, but exclusive of bond line. The thickness of resin-impregnated materials for each working face shall be not less than 0.30 mm (0.012 in) thick after pressing and shall weigh not less than 280 g per m^2 (58 pounds per 1000 ft^2) including both resin and fiber, but exclusive of bond line. Unless otherwise agreed upon between buyer and seller, MDO Concrete Form plywood shall be treated with a release agent.

5.6.7.4 Medium Density Overlay – General
MDO General plywood shall be manufactured with thermosetting phenolic resin impregnated cellulose-fiber sheet or sheets bonded to the working face. The overlay layer shall consist of a sheet or sheets, containing not less than 27% phenolic resin content based on the volatile-free weight of fiber and resin, but exclusive of bond line. The thickness of resin-impregnated materials for each working face shall be not less than 0.30 mm (0.012 in) thick after pressing and shall weigh not less than 280 g per m^2 (58 pounds per 1000 ft^2) including both resin and fiber, but exclusive of bond line. The resin-treated facing on the finished product shall be suitable for painting.

5.6.7.5 Special overlays
These are surfacing materials having resin systems, resin-treated fiber materials, or special characteristics that do not fit the particular description of High Density or Medium Density overlays as given in Sections 5.6.7.1, 5.6.7.2, 5.6.7.3, or 5.6.7.4. Special Overlays shall meet the adhesive bond requirements for overlaid plywood. (See 5.7.2.2.) Although designed for a wide variety of uses, this overlaid plywood shall be Exterior, including the base panel, bond of overlay to the panel, and the overlay itself. Panels shall be identified as "Special Overlay."

5.7 Adhesive bond requirements for a panel or a lot
The adhesive bond shall meet the requirements below.

5.7.1 Exposure 1
A panel shall be considered as meeting Exposure 1 adhesive bond requirements of this Standard if the test specimens taken from a panel average 80% wood failure or greater when tested in accordance with Section 6.1.3. For qualification purposes, specimens from at least 20 panels shall be sampled.

Lots represented by test panels shall be considered as meeting the requirements of this Standard if the requirements of (a) and (b) are met:

(a) The average wood failure of all test specimens, regardless of the number of panels tested, shall be not less than 80%,

(b) And:

1. When at least 10 panels are tested, at least 90% of the panels represented by the test pieces shall have 60% wood failure or better, and

2. When at least 20 panels are tested, at least 95% of the panels represented by the test pieces shall have 30% wood failure or better.

3. When fewer than 10 panels are tested, all panels represented by the test pieces shall have 60% wood failure or better.

The requirements of Section 5.7.1 are applicable separately and independently to the results obtained from the vacuum-pressure test (Section 6.1.3.2) and the boiling test (Section 6.1.3.3). Specimens cut through localized characteristics permitted in the grade shall be discarded. Test specimens showing delamination in excess of 3.2 mm (1/8 in) deep and 25.4 mm (1 in) long shall be rated as zero (0)% wood failure.

5.7.1.1 Heat performance

Panels shall meet the heat performance requirements for Exterior adhesives. (See Section 5.7.2.1.)

5.7.2 Exterior

When tested in accordance with Section 6.1.3, Exterior plywood shall be considered as meeting the adhesive bond requirements of this Standard if the test specimens taken from a panel average 85% wood failure or greater. For qualification purposes, specimens from at least 20 panels shall be sampled.

Lots represented by test panels shall be considered as meeting the requirements of this Standard if the minimum requirements of (a) and (b) are met:

(a) The average wood failure of all test specimens, regardless of the number of panels tested, shall be not less than 85%,

(b) And:

1. When at least 4 panels are tested, at least 75% of the panels represented by the test pieces shall have 80% wood failure or better; and

2. When at least 10 panels are tested, at least 90% of the panels represented by the test pieces shall have 60% wood failure or better; and

3. When at least 20 panels are tested, at least 95% of the panels represented by the test pieces shall have 30% wood failure or better.

4. When fewer than 4 panels are tested, all panels represented by the test pieces shall have 80% wood failure or better.

The requirements of Section 5.7.2 are applicable separately and independently to the results obtained from the vacuum-pressure test (Section 6.1.3.2) and the boiling test (Section 6.1.3.3). Specimens cut through localized characteristics permitted in the grade shall be discarded. Test specimens showing delamination in excess of 3.2 mm (1/8 in) deep and 25.4 mm (1 in) long shall be rated as zero (0)% wood failure.

5.7.2.1 Heat performance

Exterior plywood shall be considered as meeting the requirements of this section if there is no delamination in any specimen, except when occurring at a localized characteristic permitted in the grade when tested in accordance with Section 6.1.3.4. When testing overlaid plywood, blisters or bubbles in the surface caused by combustion shall not be considered as delamination.

5.7.2.2 Overlaid plywood

The bond between veneers of overlaid plywood as well as the bond between the overlay and the base panel shall meet the wood failure requirements described in Section 5.7.2 for Exterior plywood. In evaluating specimens for separation of the resin-treated face from the plywood, fiber failure shall be considered the same as wood failure.

5.8 Panel constructions and workmanship

Constructions for all panels shall conform to the minimum number of plies and layers as set forth in Table 4. The proportion of wood with grain perpendicular to panel face grain shall be not less than 33% nor more than 70% of the total panel thickness. The combined thickness of inner layers in panels having 4 or more plies shall be not less than 45% of the total panel thickness. For application of these requirements, the panel thickness shall be the actual finished panel thickness and the veneer thickness shall be the dry veneer thickness before layup.

The grain of all layers shall be perpendicular to the grain of adjacent layers and to the ends or edges of the panel. The entire area of each contacting surface of the adjacent plies, including repairs, shall be bonded with an adhesive in a manner to assure compliance with the performance requirements for its type as set forth in the test described in Section 6.

For the purpose of veneer repairing or edge joining, strings, ribbons, or tapes up to 9.5 mm (3/8 in) maximum width can occur in a bond line and shall be considered as allowable localized characteristics in the evaluation of bond line test specimens. Wider strings, ribbons, or tapes shall not be used for veneer repairing or joining unless they are pre-qualified to show bonding equal to the required bonding for the panel. Bond line test specimens cut to include the strings, ribbons, or tapes wider than 9.5 mm (3/8 in) shall not be discarded because of the presence of these materials.

Veneer strips shall not be joined by string stitching.

Rough or unsanded plywood shall be permitted to have paper tape on either face or back, or both; except that, in C-C Exterior, no tape used for veneer splicing shall be permitted.

Shims or strips of veneer shall not be used to repair panel edge voids. However, filling of permissible edge voids with synthetic fillers neatly applied shall be allowed, except as prohibited in Marine grades. (See Section 5.6.1.) Staples or pins of metal or synthetic material shall be prohibited.

Where face or back plies consist of more than one piece of edge joined veneer, gaps between adjacent pieces shall be graded as splits.

End butt joints shall only be used under the following conditions:

(a) Decorative grades as provided in Section 5.6.2.

(b) Butt joints having a total aggregate width not exceeding the width of the panel shall occur in the center ply of 5-ply, 5-layer panels. The butt joints shall be perpendicular to the grain of the panel face and back plies. The use of butt-jointed centers shall be allowed in Exposure 1 sanded grades in panels with Performance Category up to and including 1/2, and in D-D, C-D and C-D Plugged panels with Performance Category up to and including 3/4 . End butt joints shall not be used in Structural I panels. Panels with butt joints in center plies shall be marked "butt-jointed center" as specified in Section 7.3.

Plywood shall be free from blisters, laps and other characteristics, except as expressly permitted in Section 5.8 and its subsections. Panels shall have no continuous holes or through openings from face to back.

5.8.1 Crossband gaps and center gaps

Crossband gaps or center gaps, except as noted for plugged crossband and jointed crossband, shall not exceed 25.4 mm (1 in) in width for a depth of 203 mm (8 in) measured from panel edge. The average of all gaps occurring in a panel shall not exceed 12.7 mm (1/2 in). Where inner layers are thicker than 6.4 mm (1/4 in), gaps in the laminated plies shall be offset 25.4 mm (1 in) if over 6.4 mm (1/4 in) wide.

Where plugged inner plies are specified, inner plies shall be of C Plugged veneer, and gaps between adjacent pieces of inner plies shall not exceed 12.7 mm (1/2 in).

Where jointed inner plies are specified, gaps between pieces of inner plies shall not exceed 9.5 mm (3/8 in), and the average of all gaps occurring in a panel shall not exceed 4.8 mm (3/16 in).

TABLE 4. PANEL CONSTRUCTIONS (MINIMUM NUMBER OF PLIES AND LAYERS)

Panel Grades	Finished Panel Performance Category Range	Minimum Number of Plies	Minimum Number of Layers
Exterior Marine Special Exterior (See 5.6.6) B-B Concrete form B-C Concrete form HDO Industrial A-A, B-B, B-C HDO Concrete Form A-A, B-B, B-C MDO Concrete Form B-B, B-C	 Through 3/8 Over 3/8 , through 3/4 Over 3/4	 3 5 7	 3 5 7
Exposure 1 N-N, N-A, N-B, N-D, A-A, A-B, A-D, B-B, B-D Structural I (C-D, C-D Plugged and Underlayment) Exterior A-A, A-B, A-C, B-B, B-C Structural I (C-C and C-C Plugged) (See 5.6.5) MDO General B-B, B-C Special Overlays	 Through 3/8 Over 3/8 , through 1/2 Over 1/2 , through 7/8 Over 7/8	 3 4 5 6	 3 3 5 5
Exposure 1 Underlayment Exterior C-C Plugged	 Through 1/2 Over 1/2 , through 3/4 Over 3/4	 3 4 5	 3 3 5
Exposure 1 C-D C-D Plugged D-D Exterior C-C	 Through 5/8 Over 5/8 , through 3/4 Over 3/4	 3 4 5	 3 3 5

5.8.2 Veneer requirements

The veneers used in each ply of each panel and the completed panel shall conform with the applicable veneer grade and with the construction and workmanship requirements given herein. Additionally, in recognition of the requirements of selected end uses, the type and frequency of specific characteristics shall be further limited for grades in Table 5.

TABLE 5. CHARACTERISTICS PROHIBITED OR RESTRICTED IN CERTAIN PANEL GRADES

Panel Grade Designation	Description and Number of Characteristics Per Panel
N-N, N-A	No crossband laps adjacent to faces and backs
N-B	No crossband laps adjacent to N faces No more than 2 crossband laps adjacent to B grade side (Section 5.8.3) Laps are limited to 4.8 mm (3/16 in)
N-D	No crossband laps adjacent to faces No more than a total of 2 of any combination of the following: — Knothole in D veneer over 63.5 mm (2-1/2 in) but not over 76.2 mm (3 in) — Split in D veneer over 12.7 mm (1/2 in) but not over 25.4 mm (1 in) — Crossband lap adjacent to backs
Underlayment and C-C Plugged	No knotholes in veneer adjacent to face over 25.4 mm (1 in) across the grain where C grade is required per Tables 2 and 3 No knotholes in veneer adjacent to face over 63.5 mm (2-1/2 in) where D grade is permitted or over 38.1 mm (1-1/2 in) where C grade is permitted per 5.6.3 No laps adjacent to face
Structural I C-D	No splits in faces over 6.4 mm (1/4 in) No splits in backs over 12.7 mm (1/2 in) No more than a total of 2 of any combination of the following: — Knothole in C veneer over 25.4 mm (1 in) but not over 38.1 mm (1-1/2 in) — Knot in D backs over 63.5 mm (2-1/2 in) but not over 76.2 mm (3 in) — Knothole in D veneer over 63.5 mm (2-1/2 in) but not over 76.2 mm (3 in) — Crossband lap adjacent to faces (See Section 5.8.4) — Crossband lap adjacent to backs (See Section 5.8.4)
Structural I C-D Plugged	No splits in backs over 12.7 mm (1/2 in) No more than a total of 2 of any combination of the following: — Knot in D backs over 63.5 mm (2-1/2 in) but not over 76.2 mm (3 in) — Knothole in D veneer over 63.5 mm (2-1/2 in) but not over 76.2 mm (3 in) — Crossband lap adjacent to faces (See Section 5.8.4) — Crossband lap adjacent to backs (See Section 5.8.4)
Structural I Underlayment	No knotholes in core veneer next to face over 25.4 mm (1 in) No crossband laps adjacent to faces No splits in backs over 12.7 mm (1/2 in) No more than a total of 2 of any combination of the following: — Knot in D backs over 63.5 mm (2-1/2 in) but not over 76.2 mm (3 in) — Knothole in D veneer over 63.5 mm (2-1/2 in) but not over 76.2 mm (3 in) — Crossband lap adjacent to backs (See Sections 5.8.3, 5.8.4)

5.8.3 Sanded panels

Unless otherwise specified, sanded plywood shall be sanded on two sides. Sanding characteristics for N, A, B, and C Plugged faces shall be as given in Section 5.4. Exposed N, A, and B veneer surfaces of panels shall have the bark or tight surface out. Plies directly under the surface of overlaid panels are not considered exposed veneers. Faces and backs of panels shall be full width and full length; except that C grade and D grade backs shall be permitted to be narrow on one edge or short on one end only, but by not more than 3.2 mm (1/8 in) for half the panel length or width. Inner plies shall be full width and length; except that panels other than Marine shall be permitted to have one edge or end void not exceeding 3.2 mm (1/8 in) in depth and 203 mm (8 in) in length per panel. Except as otherwise specified in Table 5 for specific panel grade designations, crossband veneers not exceeding 3.2 mm (1/8 in) in thickness shall be permitted to be lapped but by not more than 4.8 mm (3/16 in) when adjacent to faces, or 12.7 mm (1/2 in) when adjacent to backs, and provided such laps create no adjacent visible openings. Sanding characteristics resulting from crossband laps shall not be permitted in panel faces.

5.8.4 Unsanded and touch-sanded panels

Grade C or D veneers shall be permitted to be lapped by not more than 12.7 mm (1/2 in) provided such laps shall create no adjacent visible opening. Additional limitations on laps adjacent to panel faces and backs are included in Table 5. All plies of C-D and D-D panels shall be full length and full width except that no more than half the length of one edge nor half the width of one end shall be permitted to contain short or narrow plies, provided:

(a) Such plies shall not be short or narrow by more than 4.8 mm (3/16 in) except that crossbands shall be permitted to be short by 12.7 mm (1/2 in) and centers shall be permitted to be narrow by 12.7 mm (1/2 in) provided they taper to within 4.8 mm (3/16 in) or less of the panel edge in 203 mm (8 in).

(b) When short or narrow by more than 4.8 mm (3/16 in), the aggregate area in the plane of the plies of such edge characteristics shall not exceed 39 cm^2 (6 in^2) in the entire panel.

(c) Such edge characteristics shall not occur in more than one ply at any panel cross section.

In grades other than C-D and D-D, backs shall be permitted to be narrow on one edge or short on one end only, but by not more than 3.2 mm (1/8 in) for half the panel length or width; inner plies shall be full width and length except that one edge or end void not exceeding 3.2 mm (1/8 in) in depth and 203 mm (8 in) in length per panel, shall be acceptable.

Panels manufactured as C-C, C-D, D-D, Structural I C-C and Structural I C-D shall not be surface textured. Panels manufactured as C-C, C-D, D-D, Structural I C-C and Structural I C-D that are sanded or touch-sanded shall meet all applicable requirements for C-C, C-D or D-D and the finished face and back veneers after sanding shall each have a minimum net thickness equal to 90% of the applicable thickness in Table 6 or in the mill specification. (See Section 5.8.7.3.)

For touch sanded panels, indents (see Section 2.26) shall be considered as an open characteristic.

TABLE 6. SPAN RATINGS FOR SHEATHING AND SINGLE-FLOOR PANELS BASED ON PRESCRIPTIVE SPECIFICATIONS (FOR SPECIAL PLY-LAYER AND SPECIES REQUIREMENTS APPLICABLE TO STRUCTURAL I PANELS, SEE SECTION 5.6.5 AND TABLE 4. FOR CROSSBAND AND TOTAL INNER PLY THICKNESS PROPORTION REQUIREMENTS, SEE SECTION 5.8.)

Span Rating [a]	Panel Performance Category	Minimum Number of Plies-Layers	Minimum Face & Back Veneer Thickness Before Pressing, for Species Group[b]				Inner Ply Species Group
			1	2	3	4	
Sheathing Panels (C-D, C-C)							
12/0	5/16	3-3	2.1 mm (1/12 in)	2.1 mm (1/12 in)	2.1 mm (1/12 in)	2.1 mm (1/12 in)	1, 2, 3 or 4
16/0	5/16	3-3	2.1 mm (1/12 in)	2.1 mm (1/12 in)	2.1 mm (1/12 in)	(c)	1, 2, 3 or 4
	11/32	3-3	2.1 mm (1/12 in)	2.1 mm (1/12 in)	2.1 mm (1/12 in)	2.1 mm (1/12 in)	1, 2, 3 or 4
20/0[e]	5/16	3-3	2.1 mm (1/12 in)	(c)	(c)	(c)	1, 2, 3 or 4
	11/32	3-3	2.1 mm (1/12 in)	2.1 mm (1/12 in)	2.5 mm (1/10 in)	(c)	1, 2, 3 or 4
	3/8	3-3	2.5 mm(1/10 in)	2.5 mm (1/10 in)	2.5 mm (1/10 in)	2.5 mm (1/10 in)	1, 2, 3 or 4
24/0	3/8	3-3	2.5 mm (1/10 in)	(c)	(c)	(c)	1, 2, 3 or 4
	13/32	3-3	2.5 mm (1/10 in)	2.5 mm (1/10 in)	(c)	(c)	1, 2, 3 or 4
	1/2	3-3	2.5 mm (1/10 in)	2.5 mm (1/10 in)	2.5 mm (1/10 in)	2.5 mm (1/10 in)	1, 2, 3 or 4
32/16	1/2	3-3	2.5 mm (1/10 in)	4.2 mm (1/6 in)	(c)	(c)	1, 2, 3 or 4
	17/32	3-3	2.5 mm (1/10 in)	2.5 mm (1/10 in)	4.2 mm (1/6 in)	(c)	1, 2, 3 or 4
	5/8	3-3	(d)	(d)	(d)	(d)	1, 2, 3 or 4
40/20[e]	5/8	3-3	(d)	4.2 mm (1/6 in)	(c)	(c)	1, 2, 3 or 4
	21/32	3-3	2.5 mm (1/10 in)	3.2 mm (1/8 in)	4.2 mm (1/6 in)	(c)	1, 2, 3 or 4
	3/4	4-3	2.5 mm (1/10 in)	2.5 mm (1/10 in)	2.5 mm (1/10 in)	3.2 mm (1/8 in)	1, 2, 3 or 4
	25/32	4-3	2.5 mm (1/10 in)	2.5 mm (1/10 in)	2.5 mm (1/10 in)	2.5 mm (1/10 in)	1, 2, 3 or 4
48/24	3/4	4-3	2.5 mm (1/10 in)	4.2 mm (1/6 in)	(c)	(c)	1, 2, 3 or 4
	25/32	4-3	2.5 mm (1/10 in)	3.2 mm (1/8 in)	4.2 mm (1/6 in)	(c)	1, 2, 3 or 4
	7/8	5-5	2.5 mm (1/10 in)	2.5 mm (1/10 in)	2.5 mm (1/10 in)	(c)	1, 2, 3 or 4
	29/32	5-5	2.5 mm (1/10 in)	2.5 mm (1/10 in)	2.5 mm (1/10 in)	3.2 mm (1/8 in)	1, 2, 3 or 4
Single-Floor Panels (UNDERLAYMENT, C-C Plugged)							
16 o.c.	1/2	3-3	2.5 mm (1/10 in)	(c)	(c)	(c)	1, 2, 3 or 4
	19/32	4-3	(d)	(d)	(d)	4.2 mm (1/6 in)	1, 2, 3 or 4
	5/8	4-3	(d)	(d)	(d)	(d)	1, 2, 3 or 4
20 o.c.[e]	19/32	4-3	(d)	4.2 mm (1/6 in)	(c)	(c)	1, 2, 3 or 4
	5/8	4-3	(d)	3.2 mm (1/8 in)	4.2 mm (1/6 in)	(c)	1, 2, 3 or 4
	23/32	4-3	2.5 mm (1/10 in)	2.5 mm (1/10 in)	2.5 mm (1/10 in)	3.2 mm (1/8 in)	1, 2, 3 or 4
	3/4	4-3	2.5 mm (1/10 in)	2.5 mm (1/10 in)	2.5 mm (1/10 in)	2.5 mm (1/10 in)	1, 2, 3 or 4
24 o.c.	23/32	4-3	2.5 mm (1/10 in)	4.2 mm (1/6 in)	4.8 mm (3/16 in)	(c)	1, 2, 3 or 4
	3/4	4-3	2.5 mm (1/10 in)	3.2 mm (1/8 in)	4.2 mm (1/6 in)	(c)	1, 2, 3 or 4
	7/8	5-5	2.5 mm (1/10 in)	2.5 mm (1/10 in)	2.5 mm (1/10 in)	3.2 mm (1/8 in)	1, 2, 3 or 4
48 o.c.	1-1/8	7-5	3.2 mm (1/8 in)	4.2 mm (1/6 in)	(c)	(c)	1 or 2
	1-1/8	7-5	3.6 mm (1/7 in)	4.2 mm (1/6 in)	(c)	(c)	1, 2 or 3
	1-1/8	7-7	2.5 mm (1/10 in)	4.2 mm (1/6 in)	4.8 mm (3/16 in)	(c)	1
	1-1/8	7-7	3.2 mm (1/8 in)	4.2 mm (1/6 in)	4.8 mm (3/16 in)	(c)	1, 2 or 3

[a] See Section 5.8.5 for description.

[b] Intermixing between species groups and/or thicknesses in the faces and backs of panels is permitted. Use the lowest applicable span rating to identify the panel. Also see Section 5.5.1.

[c] Not permitted.

[d] A minimum of 3.2 mm (1/8 in) for 3, 4 and 5-ply 3-layer panels per 5.5.1. A minimum of 2.5 mm (1/10 in) for 5-ply 5-layer panels.

[e] The “20”span designation is intended for spans of 19.2 inch.

5.8.5 Span ratings for panels

Grade-trademarking of C-C, C-D, D-D, Structural I C-C, Structural I C-D, and of C-C Plugged and Underlayment to be used as combination subfloor-underlayment (single floor) shall include a "span rating." The numbers are presented as a fraction in the marking of sheathing grades of plywood, and as a single number for C-C Plugged and Underlayment. They describe the maximum spans in inches under normal use conditions and are in accordance with commonly accepted criteria. Panels for which there is no span rating shall be identified by largest species group number of the face and back, or by the span rating of the next thinner comparable panel.

For sheathing, the left-hand number shall refer to spacing of roof framing, and the right-hand number shall relate to spacing of the floor framing. The single number for Underlayment and C-C Plugged refers to spacing of the floor framing in single floor applications. Actual maximum spans are established by local building codes.

When used as single floor, panels shall also meet the grade requirements of Section 5.6.3.

The span rating number is related to species and thickness of the panel face and back veneers, and panel Performance Category. It shall be established by either procedure (a) or (b):

(a) By specification as detailed in Table 6, or

(b) By performance testing to satisfy the strength, stiffness and bond criteria as detailed in Section 5.8.6. Such performance testing shall be performed by a qualified testing agency, as described in Section 7.2.

5.8.6 Performance testing qualification requirements for span-rated panels

5.8.6.1 General

Acceptance of performance tested plywood under this Standard is based upon testing of panel strength, stiffness and bond performance. Panels selected for testing shall be of near minimum grade and near minimum thickness. Panel average thickness shall be established in accordance with Section 5.10.2. All provisions of veneer grade and panel workmanship are applicable.

5.8.6.2 Performance testing

Panels qualified by performance testing shall satisfy the criteria called for in Section 5.8.6 when tested in accordance with Sections 5.8.6.3 and 5.8.6.4.

5.8.6.3 Structural performance

Concentrated loads

Test a maximum of 20 specimens taken from at least 10 panels. Ten specimens (taken from at least five panels) for each test exposure condition shall be evaluated for both concentrated static and impact loads according to Section 6.2.1. Requirements are found in Table 7. If additional tests are needed, they shall also consist of 10 specimens, and the results of the two 10-specimen sets shall be combined. Only one additional test set is allowed. If the combined results meet or exceed the minimum passing rate, the sample passes.

Deflection – The initial test set consists of 10 specimens.
The average deflection shall not be greater than the appropriate requirement in Table 7.

- If no more than one value is above the requirement, the sample passes.
- If two or three values are above the requirement, test an additional set.
- If four or more values are above the requirement, the sample fails.
- If ten additional specimens are tested, the combined passing rate shall be at least 85%.

Ultimate load – The initial test set consists of 10 specimens.
The average load shall not be less than the appropriate requirement in Table 7.

- If all of the values meet or exceed the requirement, the sample passes.
- If one of the values is below the requirement, test an additional set.
- If two or more values are below the requirement, the sample fails.
- If ten additional specimens are tested, the combined passing rate shall be at least 95%.

Uniform loads

Test a maximum of 20 specimens taken from at least 10 panels. Ten specimens (taken from at least five panels) for each test exposure condition shall be evaluated for uniform load capacity according to Section 6.2.2. Test requirements are found in Table 8. If additional tests are needed, they shall also consist of 10 specimens, and the results of the two 10-specimen sets shall be combined. Only one additional test set is allowed. If the combined results meet or exceed the minimum passing rate, the sample passes.

Deflection – The average deflection shall not be greater than that specified. The initial test consists of 10 specimens.

- If the average value is below the requirement, the sample passes.
- If the average value is above the requirement, test an additional set.
- If the average value based on combined results is above the requirement, the sample fails.

Ultimate load – The initial test consists of 10 specimens. The average load shall not be less than the appropriate requirement in Table 8.

- If all of the values meet or exceed the requirement, the sample passes.
- If one of the values is below the requirement, test an additional set.
- If two or more values are below the requirement, the sample fails.
- If ten additional specimens are tested, the combined passing rate shall be at least 95%.

TABLE 7. CONCENTRATED STATIC AND IMPACT TEST PERFORMANCE CRITERIA FOR PANELS TESTED ACCORDING TO SECTION 6.2.1 (SEE SECTION 5.8.6.3 FOR PASS/FAIL CRITERIA)

		Performance Criteria					
		Ultimate Load					
End Use – Span Rating	Test Exposure Conditions[a]	Static		Following Impact[b]		Deflection Under 0.89 kN (200 lbf) Load	
		kN	lbf	kN	lbf	mm	in
Roof – 16	Dry Wet	1.78	400	1.33	300	11.1[c][d]	0.438[c][d]
Roof – 20[f]	Dry Wet	1.78	400	1.33	300	11.9[c][d]	0.469[c][d]
Roof – 24	Dry Wet	1.78	400	1.33	300	12.7[c][d]	0.500[c][d]
Roof – 32	Dry Wet	1.78	400	1.33	300	12.7[c][d]	0.500[c][d]
Roof – 40	Dry Wet	1.78	400	1.33	300	12.7[c][d]	0.500[c][d]
Roof – 48	Dry Wet	1.78	400	1.33	300	12.7[c][d]	0.500[c][d]
Roof – 54	Dry Wet	1.78	400	1.33	300	12.7[c][d]	0.500[c][d]
Roof – 60	Dry Wet	1.78	400	1.33	300	12.7[c][d]	0.500[c][d]
Subfloor – 16	Dry Wet/Redry	1.78	400	1.78	400	4.8[c]	0.188[c]
Subfloor – 20[f]	Dry Wet/Redry	1.78	400	1.78	400	5.6[c]	0.219[c]
Subfloor – 24	Dry Wet/Redry	1.78	400	1.78	400	6.4[c]	0.250[c]
Subfloor – 32	Dry Wet/Redry	2.45	550	1.78	400	5.3[c]	0.207[c]
Subfloor – 48	Dry Wet/Redry	2.45	550	1.78	400	8.0[c]	0.313[c]
Single Floor - 16	Dry Wet/Redry	2.45	550	1.78	400	2.0[e]	0.078[e]
Single Floor - 20[f]	Dry Wet/Redry	2.45	550	1.78	400	2.4[e]	0.094[e]
Single Floor - 24	Dry Wet/Redry	2.45	550	1.78	400	2.7[e]	0.108[e]
Single Floor - 32	Dry Wet/Redry	3.11	700	1.78	400	2.2[e]	0.088[e]
Single Floor - 48	Dry Wet/Redry	3.11	700	1.78	400	3.4[e]	0.133[e]

[a] Wet/redry shall be exposure to three days of continuous wetting, followed by testing dry. Wet conditioning shall be exposure to three days of continuous wetting, then tested wet. Dry shall be within +/- 3% of the as-shipped moisture content.
[b] Impact shall be 102 N•m (75 lbf•ft) for span ratings up to 24, 122 N•m (90 lbf•ft) for 32, 163 N•m (120 lbf•ft) for 40, and 203 N•m (150 lbf•ft) for 48 and greater.
[c] Criteria apply under static concentrated load. They do not apply following impact.
[d] Deflection after wet conditioning not applicable.
[e] Criteria apply under static concentrated load and following impact.
[f] The “20” span designation is intended for spans of 19.2 inch.

TABLE 8. UNIFORM LOAD PERFORMANCE CRITERIA FOR PANELS TESTED ACCORDING TO SECTION 6.2.2 (SEE SECTION 5.8.6.3 FOR PASS/FAIL CRITERIA)

		Performance Criteria[b]		
			Ultimate Uniform Load	
End Use - Span Rating	Test Exposure Conditions[a]	Average Deflection Under Load	kPa	lbf/ft^2
Roof - 16	Dry	1.7 mm at 1.68 kPa (0.067 in at 35 lbf/ft^2)	7.2	150
Roof - 20 [c]	Dry	2.0 mm at 1.68 kPa (0.080 in at 35 lbf/ft^2)	7.2	150
Roof - 24	Dry	2.5 mm at 1.68 kPa (0.100 in at 35 lbf/ft^2)	7.2	150
Roof – 32	Dry	3.4 mm at 1.68 kPa (0.133 in at 35 lbf/ft^2)	7.2	150
Roof – 40	Dry	4.2 mm at 1.68 kPa (0.167 in at 35 lbf/ft^2)	7.2	150
Roof – 48	Dry	5.1 mm at 1.68 kPa (0.200 in at 35 lbf/ft^2)	7.2	150
Roof – 54	Dry	5.7 mm at 1.68 kPa (0.225 in at 35 lbf/ft^2)	7.2	150
Roof – 60	Dry	6.4 mm at 1.68 kPa (0.250 in at 35 lbf/ft^2)	7.2	150
Subfloor – 16	Dry Wet/Redry	1.1 mm at 4.79 kPa (0.044 in at 100 lbf/ft^2)	15.8	330
Subfloor – 20[d]	Dry Wet/Redry	1.3 mm at 4.79 kPa (0.053 in at 100 lbf/ft^2)	15.8	330
Subfloor – 24	Dry Wet/Redry	1.7 mm at 4.79 kPa (0.067 in at 100 lbf/ft^2)	15.8	330
Subfloor – 32	Dry Wet/Redry	2.2 mm at 4.79 kPa (0.088 in at 100 lbf/ft^2)	15.8	330
Subfloor – 48	Dry Wet/Redry	3.4 mm at 3.83 kPa (0.133 in at 80 lbf/ft^2)	10.8	225
Single Floor – 16	Dry Wet/Redry	1.1 mm at 4.79 kPa (0.044 in at 100 lbf/ft^2)	15.8	330
Single Floor – 20[c]	Dry Wet/Redry	1.3 mm at 4.79 kPa (0.053 in at 100 lbf/ft^2)	15.8	330
Single Floor – 24	Dry Wet/Redry	1.7 mm at 4.79 kPa (0.067 in at 100 lbf/ft^2)	15.8	330
Single Floor – 32	Dry Wet/Redry	2.2 mm at 4.79 kPa (0.088 in at 100 lbf/ft^2)	15.8	330
Single Floor – 48	Dry Wet/Redry	3.4 mm at 3.83 kPa (0.133 in at 80 lbf/ft^2)	10.8	225

[a] Wet/Redry shall be exposure to three days of continuous wetting, followed by testing dry. Dry shall be within 3% of the as shipped moisture content.
[b] The panel strength axis shall be across supports, unless otherwise specified.
[c] The “20” span designation is intended for spans of 19.2 inch.

5.8.6.4 Bond performance

Panels shall be classed as “Exposure 1” or “Exterior”.

Exposure 1 — Panels rated as “Exposure 1” shall be so identified and shall satisfy the bond requirements as specified in Section 5.7.1.

Exterior — Panels rated as “Exterior"' shall be so identified and shall satisfy the bond requirements specified in Section 5.7.2.

5.8.6.5 Product evaluation

Mill specification — Upon conformance with the appropriate requirements of Sections 5.8.6.3 and 5.8.6.4, a manufacturing specification unique to the product and mill shall be written based on product evaluation. This specification shall be used for quality assurance purposes by the manufacturer and the qualified testing agency, according to Section 5.8.7.3. Product evaluation will be accomplished on the same lot supplied by the manufacturer for qualification testing. Reference values shall be established during product evaluation or from applicable performance requirements in this Standard. The mill specification shall contain the following information:

Panel construction — Panels shall be defined as to veneer species and construction.

Thickness — The reference value shall be the average panel thickness less 1.932 standard deviations (the 95% lower tolerance limit at 75% confidence) for twenty panels as sampled under Section 5.8.6.1.

Mechanical properties

Bending stiffness — Twenty tests (specimens taken from at least ten panels) shall be evaluated for bending stiffness both along and across the major panel axis according to the procedures of Section 6.2.3. The reference value for each panel direction shall be the lower value of a 90% confidence interval established on the mean.

Bending strength — Ten tests (specimens taken from ten different panels) shall be tested for maximum bending moment both along and across the major panel axis according to the procedures of Section 6.2.3. The reference values for each panel direction will be the minimum observed value, or the sample mean less 1.8 times the sample standard deviation, whichever is the higher value.

5.8.7 Performance testing qualification requirements for other than span-rated panels

5.8.7.1 General

Panels using species as provided in Section 5.2.4 shall be qualified for use under this Standard based upon testing of panel strength and stiffness in accordance with Section 5.8.7.2. Results of testing shall establish a Group classification for use as required in Section 7.3 (a). Group classification established by panel testing shall be determined by the largest Group number obtained from all performance tests.

5.8.7.2 Performance testing

Bending stiffness — A minimum of twenty tests (specimens taken from at least ten panels) shall be evaluated for bending stiffness both along and across the major panel axis according to the procedures of Section 6.2.3. At least 90% of specimens tested along the major axis shall meet the minimum stiffness value along the major axis given in Table 9 for the Performance Category tested.

TABLE 9. SPECIES GROUP CLASSIFICATION TEST CRITERIA FOR OTHER THAN SPAN-RATED PANELS

Performance Category	Group	Shear Through Thickness Strength kN/m (lbf/in)	Stress Along (Parallel to Face)		
			Bending Stiffness kN•m^2/m (lbf•in^2/ft)	Bending Strength kN•m/m (lbf•in/ft)	Planar Shear Strength kN/m (lbf/ft)
1/4	1	21.0 (120)	0.15 (16 000)	0.087 (235)	3.7 (255)
	2	15.8 (90)	0.12 (13 000)	0.063 (170)	3.7 (255)
	3	15.8 (90)	0.10 (10 500)	0.063 (170)	3.7 (255)
	4	14.5 (83)	0.08 (8 800)	0.057 (155)	3.7 (255)
11/32	1	22.8 (130)	0.35 (37 500)	0.137 (370)	5.1 (350)
	2	16.6 (95)	0.30 (31 500)	0.100 (270)	5.1 (350)
	3	16.6 (95)	0.24 (25 000)	0.100 (270)	5.1 (350)
	4	15.6 (89)	0.20 (21 000)	0.093 (250)	5.1 (350)
3/8	1	22.8 (130)	0.50 (53 500)	0.183 (495)	5.8 (395)
	2	17.0 (97)	0.42 (44 500)	0.133 (360)	5.8 (395)
	3	17.0 (97)	0.33 (35 500)	0.133 (360)	5.8 (395)
	4	15.8 (90)	0.28 (29 500)	0.124 (335)	5.8 (395)
15/32	1	33.3 (190)	1.22 (130 000)	0.313 (845)	7.7 (525)
	2	24.5 (140)	1.04 (110 000)	0.228 (615)	7.7 (525)
	3	24.5 (140)	0.82 (87 000)	0.228 (615)	7.7 (525)
	4	22.8 (130)	0.68 (72 500)	0.211 (570)	7.7 (525)
1/2	1	34.1 (195)	1.41 (150 000)	0.347 (935)	8.3 (570)
	2	25.4 (145)	1.18 (125 000)	0.252 (680)	8.3 (570)
	3	25.4 (145)	0.94 (100 000)	0.252 (680)	8.3 (570)
	4	23.6 (135)	0.80 (84 500)	0.234 (630)	8.3 (570)
19/32	1	43.8 (250)	2.17 (230 000)	0.463 (1250)	10.1 (695)
	2	32.4 (185)	1.79 (190 000)	0.335 (905)	10.1 (695)
	3	32.4 (185)	1.41 (150 000)	0.335 (905)	10.1 (695)
	4	29.8 (170)	1.18 (125 000)	0.311 (840)	10.1 (695)
5/8	1	43.8 (250)	2.40 (255 000)	0.500 (1350)	10.8 (740)
	2	32.4 (185)	2.02 (215 000)	0.361 (975)	10.8 (740)
	3	32.4 (185)	1.60 (170 000)	0.361 (975)	10.8 (740)
	4	29.8 (170)	1.32 (140 000)	0.335 (905)	10.8 (740)
23/32	1	44.7 (255)	3.34 (355 000)	0.575 (1550)	12.2 (835)
	2	33.3 (190)	2.78 (295 000)	0.408 (1100)	12.2 (835)
	3	33.3 (190)	2.21 (235 000)	0.408 (1100)	12.2 (835)
	4	30.6 (175)	1.84 (195 000)	0.389 (1050)	12.2 (835)
3/4	1	45.5 (260)	3.67 (390 000)	0.612 (1650)	12.6 (860)
	2	33.3 (190)	3.06 (325 000)	0.445 (1200)	12.6 (860)
	3	33.3 (190)	2.45 (260 000)	0.445 (1200)	12.6 (860)
	4	30.6 (175)	2.02 (215 000)	0.408 (1100)	12.6 (860)
7/8	1	46.4 (265)	5.18 (550 000)	0.760 (2050)	14.6 (1000)
	2	34.1 (195)	4.33 (460 000)	0.556 (1500)	14.6 (1000)
	3	34.1 (195)	3.44 (365 000)	0.556 (1500)	14.6 (1000)
	4	32.4 (185)	2.87 (305 000)	0.500 (1350)	14.6 (1000)
1	1	65.7 (375)	7.91 (840 000)	0.982 (2650)	16.8 (1150)
	2	48.2 (275)	6.59 (700 000)	0.704 (1900)	16.8 (1150)
	3	48.2 (275)	5.27 (560 000)	0.704 (1900)	16.8 (1150)
	4	44.7 (255)	4.38 (465 000)	0.649 (1750)	16.8 (1150)
1-1/8	1	66.5 (380)	10.36 (1 100 000)	1.205 (3250)	18.3 (1250)
	2	49.0 (280)	8.52 (905 000)	0.871 (2350)	18.3 (1250)
	3	49.0 (280)	6.83 (725 000)	0.871 (2350)	18.3 (1250)
	4	45.5 (260)	5.70 (605 000)	0.816 (2200)	18.3 (1250)

Bending strength — A minimum of ten tests (specimens taken from ten different panels) shall be tested for bending strength both along and across the major panel axis according to the procedures of Section 6.2.3. At least 95% of the specimens tested along the major axis direction shall meet the value given in Table 9 for the Performance Category tested.

Planar shear strength — A minimum of ten tests (specimens taken from ten different panels) shall be tested for planar shear strength along the major panel axis according to the procedures of Section 6.2.4. At least 95% of the tests shall meet the planar shear strength value along the major axis given in Table 9 for the Performance Category tested.

Shear-through-the-thickness strength — A minimum of ten tests (specimens taken from ten different panels) shall be tested for shear strength through the thickness according to the procedures of Section 6.2.5. At least 95% of tests shall meet the shear-through-the-thickness strength value given in Table 9 for the Performance Category tested.

5.8.7.3 Mill specification

Upon conformance with the requirements of Section 5.8.7.2, a manufacturing specification unique to the product and mill shall be written. This specification shall be used for quality assurance purposes by the manufacturer and the qualified testing agency defined in Section 7.2. The manufacturing specification shall define veneer species and panel construction and shall include the following reference values:

Thickness — The reference value shall be the average panel thickness less 1.932 standard deviations (the 95% lower tolerance limit at 75% confidence) for twenty panels tested under Section 5.8.7.2.

Mechanical Properties

Bending stiffness — The reference values for each panel direction shall be the lower value of a 90% confidence interval (see ASTM D 2915) established on the mean for each panel direction.

Bending strength — The reference values for each panel direction shall be the minimum observed value, or the sample mean less 1.8 times the sample standard deviation, whichever is the higher value for each panel direction.

Planar shear strength — The reference value shall be the minimum observed value, or the sample mean less 1.8 times the sample standard deviation whichever is the higher value

Shear-through-the-thickness strength — The reference value shall be the minimum observed value, or the sample mean less 1.8 times the sample standard deviation, whichever is the higher value.

As an alternative to the mechanical properties, the performance tests of Section 5.8.7.2 may also be used for quality assurance purposes.

5.9 Scarf and finger jointed panels

Neither panels with N faces, nor the faces of such panels, unless longer than 3 m (10 ft), shall be scarf or finger jointed unless otherwise agreed to by buyer and seller. Panels of other grades shall be permitted to be scarf or finger jointed unless otherwise agreed to by buyer and seller, and panels longer than 3.7 m (12 ft) are necessarily scarf or finger-jointed. Plain scarfed joints and the scarfed portion of finger-joints shall not have a slope greater than 1 to 8. All plies

with grain perpendicular to the finger joint shall be included in the scarfed portions of the joint, except that such plies shall be permitted to include up to 0.8 mm (1/32 in) of vertical shoulder in the scarf (see Figure 1). Joints shall be bonded with a moisture resistant adhesive and shall meet the test requirements set forth in Sections 5.9.1, 5.9.2, and 5.9.3 as applicable. In addition, the adhesive shall not show creep or flow characteristics greater than unjointed wood when subject to load under any conditions of temperature and moisture.

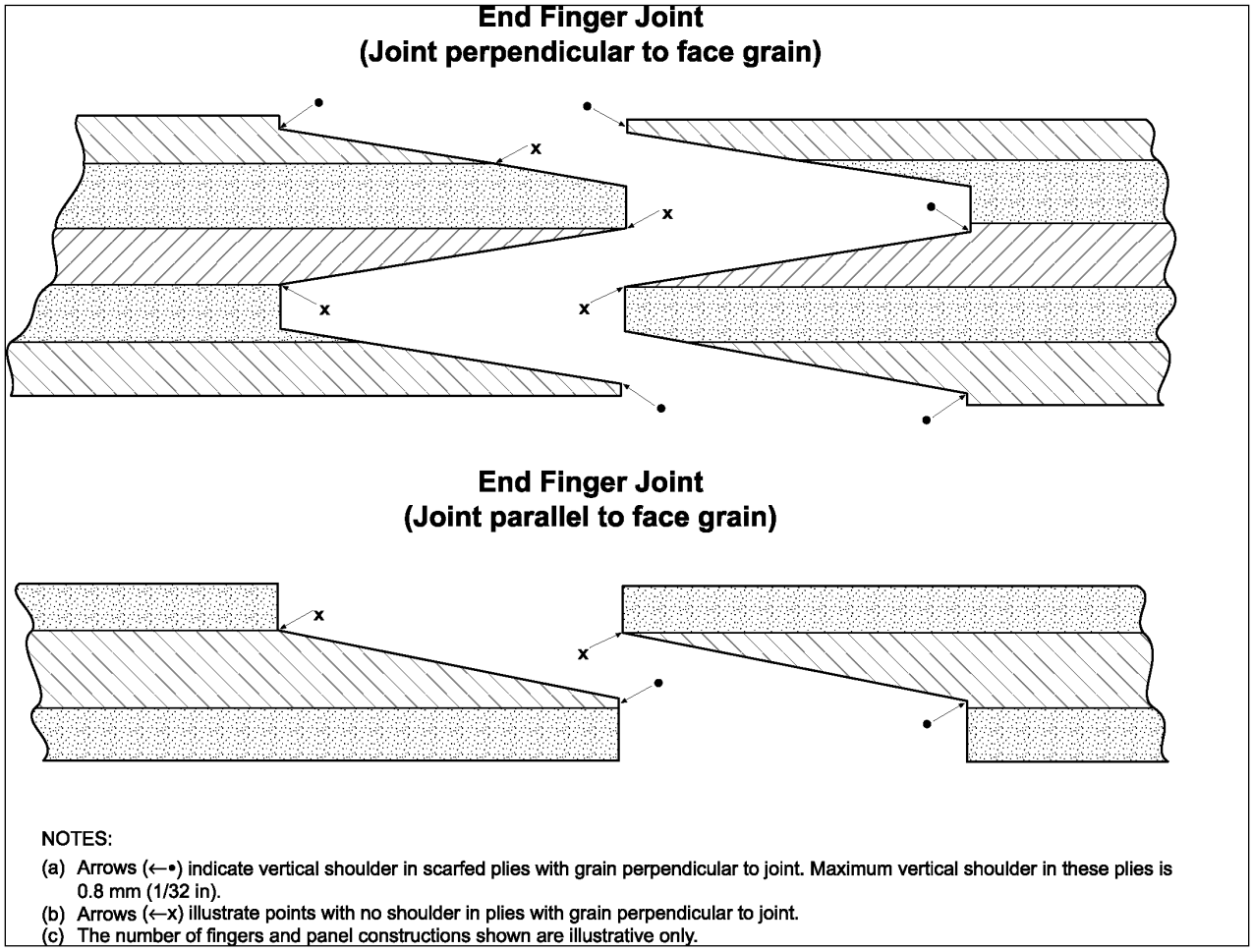

Figure 1. Finger joints – Location of scarfed portion of joints.

5.9.1 Strength requirements for scarf and finger jointed panels

If the average ultimate stress of the three test specimens of any one panel is less than 27.6 MPa (4000 psi) for panels of Group 1 species, or less than 19.3 MPa (2800 psi) for panels of Group 2 or Group 3 species, or less than 16.5 MPa (2400 psi) for panels of Group 4 species, or less than 13.8 MPa (2000 psi) for panels of Group 5 species, when tested in accordance with Section 6.1.5.1, then that panel shall fail. The jointed panels represented by a sampling of ten panels shall be acceptable if not more than one of the panels fails and the average ultimate stress of the failing panel is at least 80% of that specified for the applicable species group. If the average ultimate stress of the failing panel is at least 75% of that specified for the applicable species group, another series of ten panels shall be tested. If none of the panels in this series fails, the jointed panels shall be accepted; otherwise they shall be rejected.

5.9.2 Scarf joint bond performance for Exposure 1 and Exterior plywood

Panels shall be tested in accordance with Section 6.1.5.2. The material represented by the sampling shall be evaluated in accordance with Sections 5.7.1, and 5.7.2, as applicable.

5.9.3 Finger joint bond performance for Exposure 1 and Exterior plywood

Panels shall be tested in accordance with Section 6.1.5.3. The joints shall meet all of the following minimum conditions:

(a) The average wood failure rating of all specimens from each panel when tested in accordance with Section 6.1.5.3 shall be not less than 85%.

(b) No single specimen from a panel (average of face and back bond lines) shall rate less than 60% wood failure.

(c) No single face or back bond line in any specimen shall rate less than 30% wood failure.

5.10 Dimensional tolerances and squareness of panels

Panel measurements shall be based on a moisture content of 9%.

5.10.1 Size tolerances

A length and a width measurement shall be made at a location 50 to 75 mm (2 to 3 in) from the panel edge. A tolerance of plus zero (0) mm, minus 1.6 mm (1/16 in) shall be allowed on the manufacturer's stated length and/or width.

ADVISORY NOTE: For tongue and grooved and ship-lapped panels, the width and squareness measurements should be made on the net panel face.

5.10.2 Performance Category and thickness tolerances

Panel thickness shall be measured with a micrometer having 19.1 mm (3/4 in) (minus 0, plus 1.3 mm [0.050 in]) diameter anvils. Measurements shall be taken at an applied anvil pressure of not less than 34 kPa (5 psi) or more than 69 kPa (10 psi). The location of the measurements shall be representative of panel thickness mid-length,+/- 50 mm (2 in) along each edge of the panel and the average of the four measurements shall be taken as the thickness of that panel. If a measurement point contains a permissible grade characteristic that affects panel thickness, then the measurement point shall be shifted from that point.

The panel thickness shall conform to Table 10.

TABLE 10. PLYWOOD THICKNESS REQUIREMENTS

	Thickness Requirements for Unsanded, Touch Sanded and Overlaid Grades[1]		Thickness Requirements for Sanded Grades[2]	
PERFORMANCE CATEGORY[3]	Minimum Thickness, mm (in)	Maximum Thickness, mm (in)	Minimum Thickness, mm (in)	Maximum Thickness, mm (in)
1/4 PERF CAT	5.56 (0.219)	7.14 (0.281)	5.95 (0.234)	6.75 (0.266)
11/32 PERF CAT	7.94 (0.313)	9.53 (0.375)	8.33 (0.328)	9.13 (0.359)
3/8 PERF CAT	8.73 (0.344)	10.32 (0.406)	9.13 (0.359)	9.92 (0.391)
7/16 PERF CAT	10.32 (0.406)	11.91 (0.469)	10.72 (0.422)	11.51 (0.453)
15/32 PERF CAT	11.11 (0.438)	12.70 (0.500)	11.51 (0.453)	12.30 (0.484)
1/2 PERF CAT	11.91 (0.469)	13.49 (0.531)	12.30 (0.484)	13.10 (0.516)
9/16 PERF CAT	13.49 (0.531)	15.08 (0.594)	13.89 (0.547)	14.68 (0.578)
19/32 PERF CAT	14.29 (0.563)	15.88 (0.625)	14.68 (0.578)	15.48 (0.609)
5/8 PERF CAT	15.08 (0.594)	16.67 (0.656)	15.48 (0.609)	16.27 (0.641)
23/32 PERF CAT	17.46 (0.688)	19.05 (0.750)	17.86 (0.703)	18.65 (0.734)
3/4 PERF CAT	18.26 (0.719)	19.84 (0.781)	18.65 (0.734)	19.45 (0.766)
13/16 PERF CAT	19.84 (0.781)	21.43 (0.844)	20.02 (0.788)	21.26 (0.837)
7/8 PERF CAT	21.11 (0.831)	23.34 (0.916)	21.56 (0.849)	22.89 (0.901)
1 PERF CAT	24.13 (0.950)	26.67 (1.050)	24.64 (0.970)	26.16 (1.030)
1-1/8 PERF CAT	27.15 (1.069)	30.00 (1.181)	27.72 (1.091)	29.43 (1.159)
1-1/4 PERF CAT	30.16 (1.188)	33.34 (1.313)	30.80 (1.213)	32.70 (1.288)

[1]Thickness requirements for unsanded, touch sanded, and overlaid panels are based on a tolerance of ± 0.8 mm (1/32 in) for panels with Performance Categories of 13/16 and less and ± 5% for panels with Performance Categories greater than13/16 unless a closer tolerance is determined through qualification testing.

[2]Thickness requirements for sanded panels is based on a tolerance of ± 0.4 mm (1/64 in) for panels with Performance Categories of 3/4 and less and ± 3.0% for panels with Performance Categories greater than 3/4 unless a closer tolerance is determined through qualification testing.

[3] For labeling purposes, abbreviation of "Performance Category" by PERF CAT, CAT or Category is permitted. Performance Categories for other panel thicknesses are permitted.

5.10.3 Squareness and straightness

Squareness and straightness - Panels shall be square within 1.3 mm per lineal meter of the longest edge (1/64 in per lineal foot) measured along the diagonals. All panels shall be manufactured so that a straight line drawn from one corner to the adjacent corner is within 1.6 mm (1/16 in) of the panel edge.

5.11 Moisture content

Moisture content of panels at time of shipment shall not exceed 18% when tested in accordance with Section 6.1.4.

5.12 Loading or packing

The plywood shall be securely loaded or packaged to ensure delivery to destination in a clean and serviceable condition.

6. SPECIMEN PREPARATION AND TESTING

6.1 Bond classification

6.1.1 General

The tests set forth in this section shall be used to determine the adhesive bond quality of plywood produced under this Standard.

6.1.2 Specimen preparation (see appendix B for sampling for reinspection)

Testing shall follow the principles of ASTM D906 and procedures herein. One test piece shall be cut from each panel selected. Unless otherwise specified by the qualified testing agency, 10 test specimens shall be cut as described in Section 6.1.3.1 for panels bonded with moisture-resistant adhesive. Of the 10 specimens cut from each test piece for panels bonded with moisture resistant adhesive, 5 shall be for the vacuum-pressure test and 5 shall be for the boil test. In addition, from each panel selected, a specimen 140 mm by 203 mm (5-1/2 x 8 in) shall be cut and tested as described in Section 6.1.3.4.

6.1.3 Tests for Exposure 1 and Exterior plywood

6.1.3.1 Preparation of test specimens

Test specimens taken as described in Section 6.1.2 shall be cut 82.6 mm long by 25.4 mm wide (3-1/4 in x 1 in), and kerfed one-third of the length of the specimen from each end, as illustrated in Figure 2 to provide a 25.4 mm (1 in) square test area in the center. Specimens shall be oriented so that the grain direction of the ply under test runs at a 90° angle to the length of the specimen. Kerfing shall extend two-thirds of the way through the ply under test, and shall not penetrate the next bond line. For overlaid plywood, the additional 10 specimens for testing of bond between veneers shall be cut as described in this section for Exterior specimens except that they shall be cut 25.4 mm (1 in) wide and 76.2 mm (3 in) long, and kerfed just through the overlay 25.4 mm (1 in) from the end, on each overlay face.

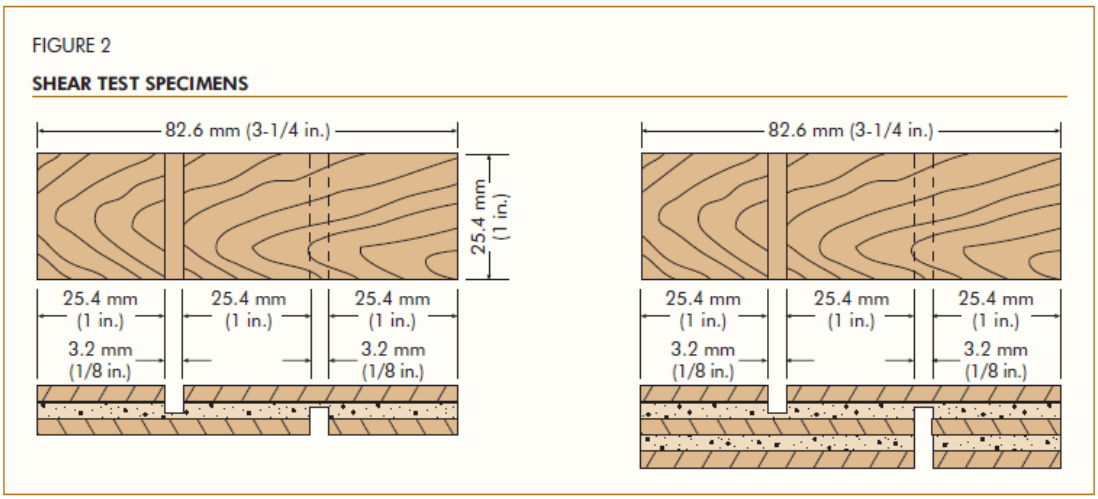

Figure 2. Shear test specimens.

If the number of plies exceeds three, the cuts shall be made so as to test any two of the joints, but the additional plies need not be stripped except as demanded by the limitations of the width of the retaining jaws on the testing device. When required to accommodate thicker plywood, special jaws shall be constructed. If the number of plies exceeds three, the choice of joints to be tested shall be left to the discretion of the qualified inspection and testing agency, but at least one-half of the tests shall include the innermost joints.

6.1.3.2 Vacuum-pressure test

The test specimen shall be placed in a pressure vessel and submerged in cold tap water. A vacuum of 83.5 kPa to 98.5 kPa or 24.7 inches to 29.0 inches of mercury shall be drawn and maintained for 30 minutes, followed immediately with application of 450 kPa to 480 kPa (65 psi to 70 psi) of pressure for 30 minutes duration. Specimens shall then be removed from the vessel and tested while wet by tension loading to failure in a shear testing machine operated at

a maximum head travel of 762 mm (30 in) per minute. The jaws of the machine shall securely grip the specimens so there is no slippage. The percentage of wood failure of the specimens shall be determined in a dry condition in accordance with ASTM D5266 and evaluated as described in Sections 5.7.1 and 5.7.2.

The bond between veneers in overlaid plywood shall be tested in an identical manner and evaluated as described in Section 5.7.2. Specimens for testing the bond between the overlay and the base panel shall be subjected to the same test cycle just described. The bond between the overlay and the base panel shall be tested by inserting a sharp, thin blade of adequate stiffness into the corner of the 25.4 mm (1 in) test area at the overlay-veneer interface, taking care not to cut into the overlay, and attempting to peel the overlay off. Reinsertion of the blade several times shall be permitted if necessary, to remove the overlay from the 6.5 cm^2 (1 in^2) area. The percentage of wood and/or fiber failure shall then be estimated with specimens in a dry condition in accordance with ASTM D5266 and evaluated as described in Section 5.7.2. The value for each specimen shall be the average of the test areas on each face.

6.1.3.3 Boiling test

Test specimens shall be boiled in water for 4 hours and then dried for 20 hours at a temperature of 63 $\pm$ 3° C (145 $\pm$ 5° F) with sufficient air circulation to lower moisture content of the specimens to a maximum of 8%. The specimens shall be boiled again for a period of 4 hours, cooled in water, and tested while wet by tension loading to failure in a shear testing machine operated at a maximum head travel of 762 mm (30 in) per minute. Jaws of the machine shall securely grip the specimens so there is no slippage. The percentage of wood failure of the specimens shall be determined with specimens in a dry condition in accordance with ASTM D5266 and evaluated as described in Sections 5.7.1 and 5.7.2.

The bond between veneers in overlaid plywood shall be tested in an identical manner and evaluated as described in Section 5.7.2. Specimens to test the bond between the overlay and the base panels shall be subjected to the same test cycle described in the previous paragraph. The bond between the overlay and the base panel shall be tested by inserting a sharp, thin blade of adequate stiffness into the corner of the 25.4 mm (1 in) test area at the overlay-veneer interface, taking care not to cut into the overlay, and attempting to peel the overlay off. Reinsertion of the blade several times shall be permitted if necessary, to remove the overlay from the 6.5 cm^2 (1 in^2) area. The percentage of wood and/or fiber failure shall then be estimated with specimens in a dry condition in accordance with ASTM D5266 and evaluated as described in Section 5.7.2. The value for each specimen shall be the average of the test areas on each face.

6.1.3.4 Heat performance test

A specimen cut as described in Section 6.1.2 shall be placed on a stand as illustrated in Figure 3. A specimen shall then be subjected to an 800° C to 900° C (1472° F to 1652° F) flame from a Bunsen-type burner for a period of 10 minutes, or until a brown charred area appears on the back side, whichever occurs first. The burner shall be equipped with a wing top to envelop the entire width of the specimen in flame. The top of the burner shall be 25.4 mm (1 in) from the specimen face and the flame 38.1 mm (1-1/2 in) high. The flame shall impinge on the face of the specimen 50.8 mm (2 in) from the bottom end. After the test, the sample shall be removed from the stand and the bond lines examined for delamination by separating the charred plies with a sharp, chisel-like instrument. Specimens shall be evaluated in accordance with the requirements of Section 5.7.2.1.

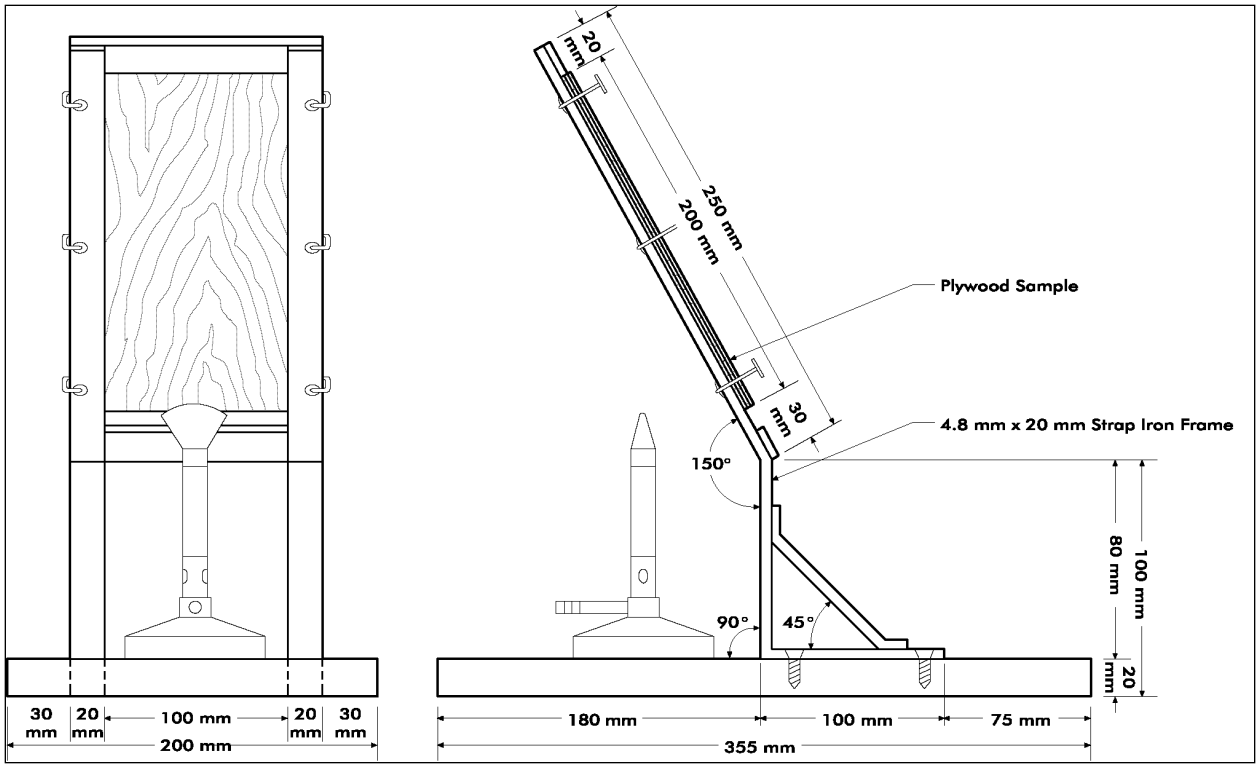

Figure 3. Apparatus for heat durability test.

6.1.4 Test for determination of moisture content (oven-drying method)

The moisture content of the plywood shall be determined as follows: A small test specimen shall be cut from each sample panel; the test specimen shall measure not less than 58 cm^2 (9 in^2) in area and shall weigh not less than 20 grams (approximately 3/4 ounce). All loose splinters shall be removed from the specimen. The specimen shall be immediately weighed on a scale that is accurate to ±0.5%, and the weight shall be recorded as the "original" weight. The specimen shall then be dried in an oven at 100° C to 105° C (212° F to 221° F) until constant weight is attained. After drying, the specimen shall be reweighed immediately, and this weight shall be recorded as the "oven-dry" weight. The moisture content shall be calculated as follows:

$$\frac{(\text{Original weight}) - (\text{Oven dry weight})}{(\text{Oven dry weight})} \times 100 = \text{Moisture content (\%)}$$

6.1.5 Scarf and finger-joint tests

6.1.5.1 Scarf and finger-joint strength

Three test specimens shall be cut at random along each joint from each panel selected. Type, grade and species of the panels shall be recorded. The specimens shall be cut so as to include the joint and shall be prepared as illustrated in Figure 4.

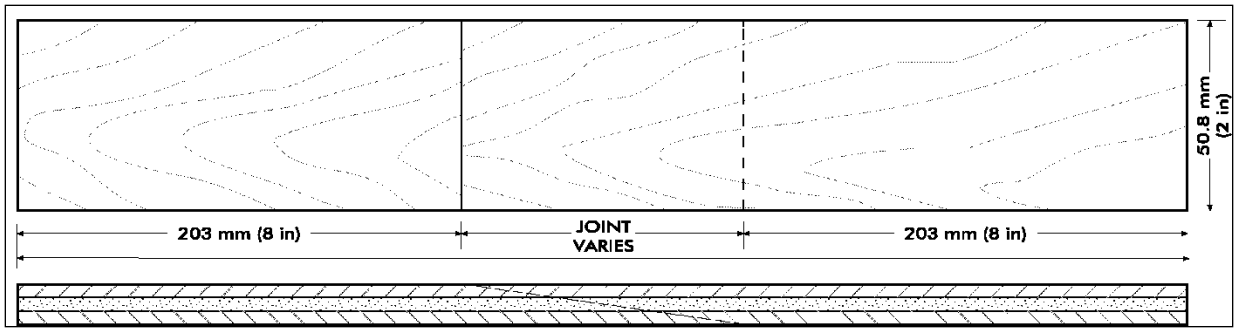

Figure 4. Tension specimen for scarf jointed panels.

Insofar as possible, the joint test area shall contain no localized natural characteristics permitted within the grade. At the joint, the maximum thickness and width of plies parallel with the load shall be recorded. Each specimen shall then be placed in the tension grips of a testing machine and loaded continuously at a rate of cross-head travel of from 0.8 mm to 1.0 mm (0.030 in to 0.040 in) per minute until failure, and the ultimate load shall be recorded. The ultimate stress in MPa (psi) shall be computed using the ultimate load and area of those plies whose grain is parallel with direction of load. Moisture content of the specimens at the time of testing shall not exceed 16%.

6.1.5.2 Scarf joint bond performance of Exterior and Exposure 1 plywood
Ten test specimens shall be cut at random along each joint from each panel selected according to Section 6.1.2. The specimens shall be prepared following the general procedure described in Section 6.1.3.1 and shall be cut so that the joint runs through the test specimens as shown in Figure 5.

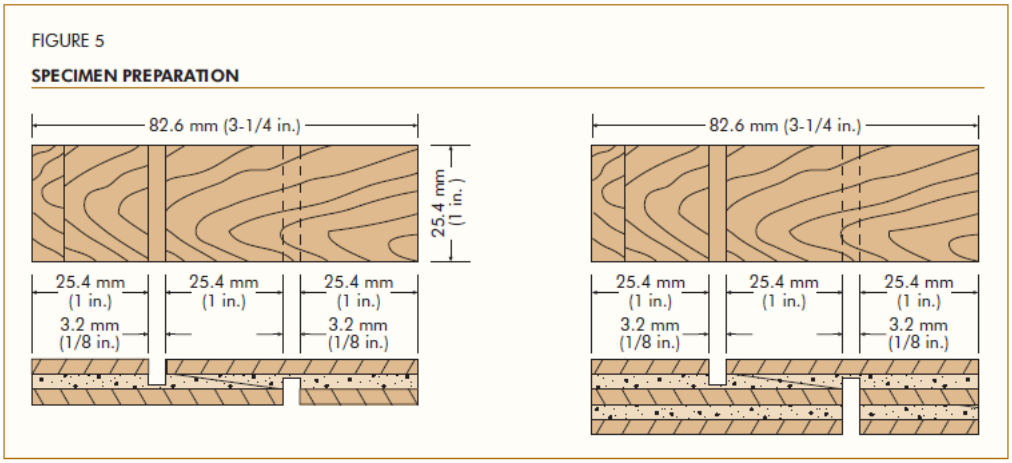

Figure 5. Specimen preparation.

Five specimens shall be subjected to the vacuum-pressure test described in Section 6.1.3.2, and five to the boiling test of Section 6.1.3.3. The panels shall be evaluated as described in Sections 5.7.1 and 5.7.2.

6.1.5.3 Finger-joint bond performance of Exterior and Exposure 1
Ten specimens shall be cut at random along the finger joint from each panel selected according to Section 6.1.2. These specimens shall be cut so as to include the joint and shall be prepared as illustrated in Figure 6.

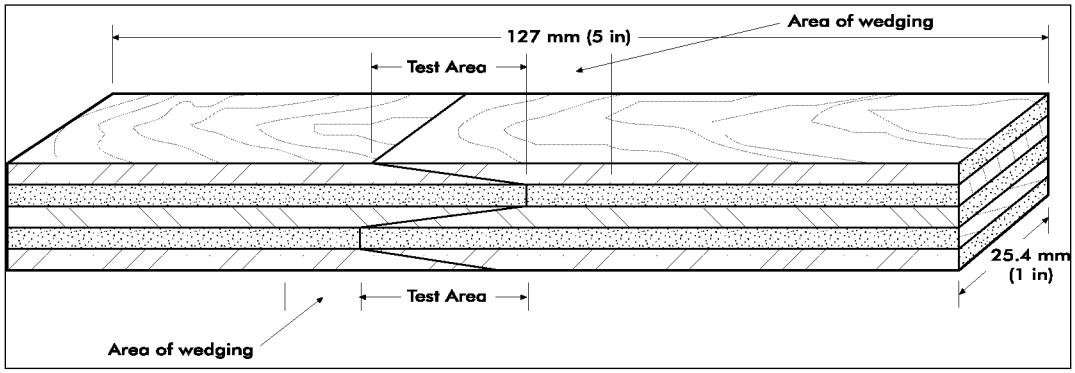

Figure 6. Cleavage test, typical test specimen.

Five of the specimens shall be subjected to the vacuum-pressure test of Section 6.1.3.2 and five to the boiling test of Section 6.1.3.3.

Upon completion of the applicable moisture cycle(s), a wedge or chisel (see Figure 7) shall be inserted in locations shown in Figure 6 in such a manner as to pry apart the scarfed portions of the joint without directly contacting the bonded area. Test specimens shall be dried and percent wood failure in the test area estimated and applied separately for both the boil and vacuum-pressure treatments. The panels shall be evaluated as described in Section 5.9.3.

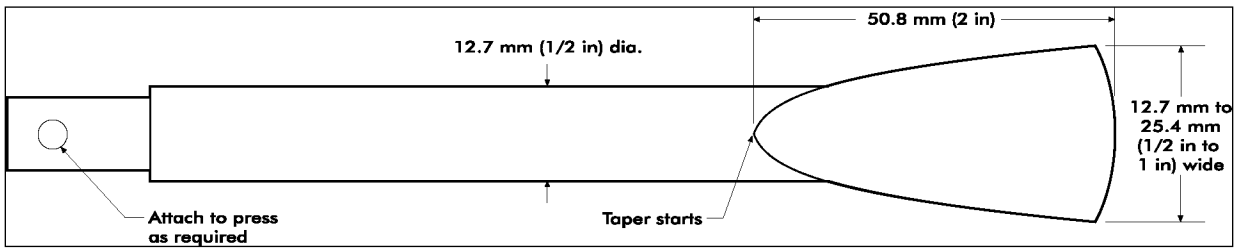

Figure 7. Wedge or chisel used for cleavage test.

6.2 Structural performance

6.2.1 Tests for performance under concentrated static and impact loads

6.2.1.1 General

The general provisions of ASTM E 661 shall be followed except as modified in these sections.

The test span shall be 19.2 inch for the span rating of 20.

The dry test condition shall be within +/- 3% of the as-shipped moisture content. The wet test condition shall be exposure to three days of continuous wetting, then tested wet. The wet/redry condition shall be exposure to three days of continuous wetting, followed by testing within 3% of the as-shipped moisture content.

6.2.1.2 Specimen preparation

Test specimens shall be prepared as specified in ASTM E 661. The number of specimens required is given in Section 5.8.6.3. Specimens shall also be moisture cycled as required.

6.2.1.3 Test procedure

Concentrated static — Procedures of ASTM E 661 shall be followed, except the test frame shall be constructed of lumber with nails or of steel using fasteners which simulate nails. The loading rate shall be 445 N (100 lbf) per 30 seconds to yield failure within 5 minutes if a hand-pumped hydraulic loading system is used.

Concentrated impact — Procedures of ASTM E 661 Method A shall be followed, except:

(a) The test frame shall be constructed of lumber with nails or of steel using fasteners which simulate nails.

(b) For span ratings greater than 24 o.c., the shot bag shall weigh 27 kg (60 pounds).

The width of individual pieces in assembling a test shall be 610 mm (24 in) or greater for span ratings up to 24 o.c., and 1220 mm (48 in) for greater span ratings.

6.2.2 Test for performance under uniform loads

6.2.2.1 General

This method shall determine the performance of structural-use panels under uniform loads such as snow, wind and occupancy loads. The uniform load is applied by atmospheric pressure as a vacuum is drawn under the test specimen, which is mounted on fully-supported framing members in a vacuum chamber.

6.2.2.2 Equipment

Vacuum chamber — The vacuum chamber (see Figure 8) shall consist of a sealed box with the panel to be tested forming the top. A 0.15 mm (6 mil or 0.006 in) polyethylene sheet or equivalent, the perimeter of which is attached securely with tape, shall seal the top surface of the vacuum chamber. The chamber shall be strong and rigid to resist the applied load without failure or excessive deformation. A vacuum pump shall be used to reduce the air pressure under the specimen. The load shall be measured with absolute pressure gages for electronic data readout, but manometers or vacuum gages shall also be permitted.

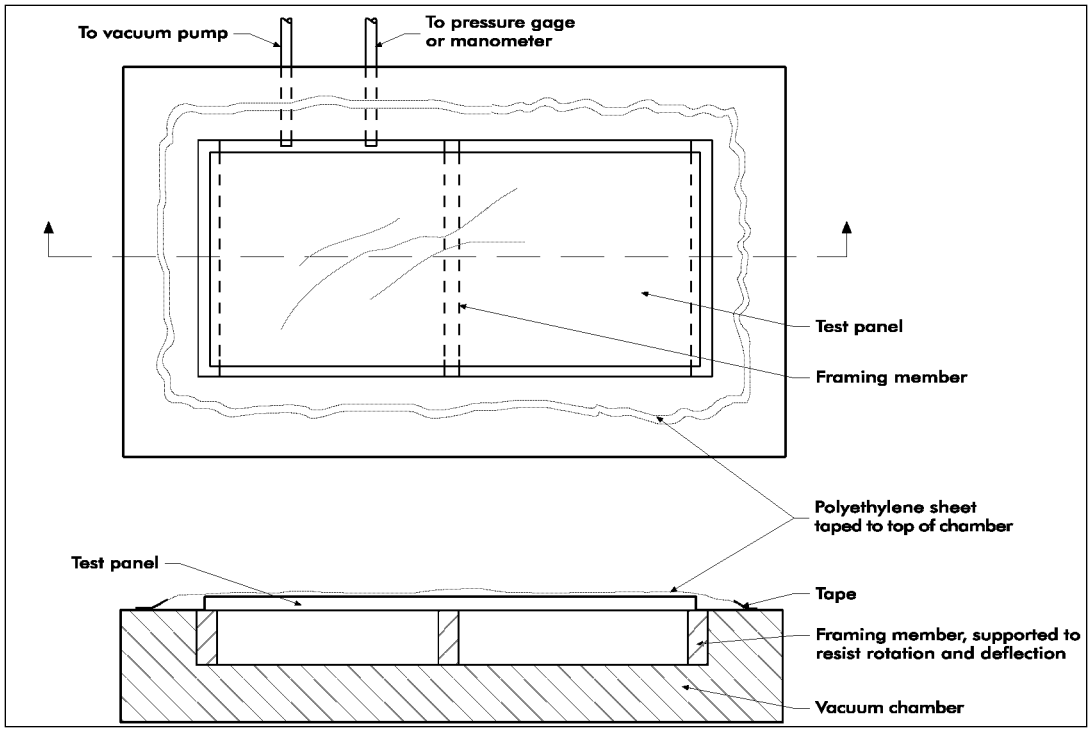

Figure 8. Vacuum chamber test equipment.

Joist supports — The framing members shall be spaced at the intended span rating, except that 20 span rating shall have framing spaced 19.2 inch. Framing shall be supported so as to resist deflection or rotation under applied load.

Deflection gages — The deflection gages shall be mounted to rigid tripods whose legs rest above the joists. Deflection shall be measured to the nearest 0.03 mm (0.001 in).

6.2.2.3 Specimen preparation
Samples shall be selected that are representative of the product being tested.

Length — The specimen length perpendicular to the framing member shall be equal to twice the center-to-center spacing.

Width — The specimen width shall be at least 597 mm (23-1/2 in).

Thickness — The specimen thickness shall be measured after conditioning and recorded.

6.2.2.4 Test procedure
After conditioning, the specimen to be tested shall be mounted on the framing members in the vacuum chamber in accordance with the anticipated joist spacing and the recommended nail size and spacing. The top of the vacuum chamber shall then be sealed with the polyethylene sheet, and the tripod holding the deflection gages set in its proper position with the gages positioned to read deflection at the point of maximum deflection[2] of the two outer spans (Figure 9).

[2] The point of maximum deflection for a uniformly loaded two-span system shall occur at 0.4215 (S) measured from the centerline of the outer joist, where S equals the center-to-center joist spacing.

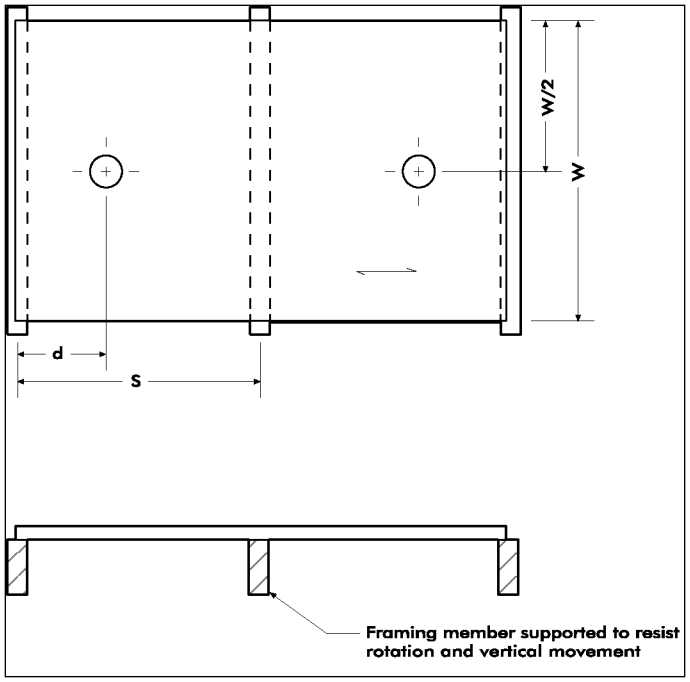

Figure 9. Uniform-load test specimens.

The panel shall be loaded at a uniform rate of 2.4 kPa (50 lbf/ft^2) per minute and deflections recorded at 1.2 kPa (25 lbf/ft^2) increments until maximum load is achieved or until the desired proof load is achieved, as required. Deflection data shall be required only in sufficient numbers to develop the straight line portion of the load-deflection curve. In no case shall the number of data points be less than six. Deflection at a given load shall be determined by translating the slope to pass through the origin, thereby correcting for any settling of the system.

6.2.3 Test for panel bending

6.2.3.1 General

This test procedure shall provide the basic data regarding full panel bending strength and stiffness. The general provisions of ASTM D 3043 Method C shall be followed.

6.2.3.2 Specimen preparation

Specimens shall be prepared according to ASTM D 3043 Method C.

6.2.3.3 Test procedure

The procedures of ASTM D 3043 Method C shall be followed except specimens shall be tested for stiffness both along and across the major panel axis, and the maximum bending moment shall be taken as required.

6.2.4 Test for planar shear strength

6.2.4.1 General

This test procedure shall determine the shear strength of plywood panels associated with shear distortion of the planes parallel to the edge planes of the panel. The general provisions of ASTM D 2718 shall be followed.

6.2.4.2 Specimen preparation
Specimens shall be prepared in accordance with ASTM D 2718. Specimens shall be prepared to evaluate planar shear with the face grain direction parallel to the long dimension

6.2.4.3 Test procedure
The procedures of ASTM D 2718 (Method A or Method B) shall be followed. Lumber side plates may be used in lieu of steel plates in Method A. The planar shear strength shall be measured parallel to the face grain direction.

6.2.5 Test for shear-through-the-thickness strength

6.2.5.1 General
This test procedure shall determine the shear strength when loads are developed along opposite edges of panels. The general provisions of ASTM D 2719 Method C shall be followed.

6.2.5.2 Specimen preparation
Specimens shall be prepared in accordance with ASTM D 2719 Method C – Two Rail Test.

6.2.5.3 Test procedure
The procedures of ASTM D 2719 Method C shall be followed. The shear-through-the-thickness strength shall be measured and reported as a capacity, $F_v t_v$.

7. GRADEMARKING AND CERTIFICATION

7.1 Certification
Plywood represented as being in conformance with this Standard shall bear the mark of a qualified inspection and testing agency which (1) either inspects the manufacture (with adequate sampling, testing of bond line, and examination for quality of all veneers) or (2) has tested a random sampling of the finished panels in the shipment being certified for conformance with this standard. The mark shall maintain legibility after weather exposure during construction.

7.2 Qualified inspection and testing agency
A qualified inspection and testing agency is defined to be one that:

(a) A qualified inspection agency is defined as one that is accredited to ISO/IEC 17020, *Conformity Assessment – Requirements for the Operation of Various Types of Bodies Performing Inspections*. An agency accredited to ISO/17065, Conformity Assessment-Requirements for Bodies Certifying Processes and Services and meets the applicable requirements of ISO/IEC 17020 and has inspections included in its certification scheme meets the definition of qualified inspection agency.

(b) A qualified testing agency is defined as one that is accredited to ISO/IEC 17025, *General Requirements for the Competence of Testing and Calibration Laboratories*. An agency accredited to ISO/17065, Conformity Assessment-Requirements for Bodies Certifying Processes and Services and meets the applicable requirements of ISO/IEC 17025 and has testing included in its certification scheme meets the definition of qualified testing agency.

7.3 Panel marking

All panels represented as conforming to this Standard shall be identified with marks giving the following information:

(a) **Species group number, span rating and class** — Unless otherwise provided, panels which are produced with face and back veneers of the same species group shall be identified as being of that species group. Touch-sanded panels without span ratings that are manufactured with face and back plies of different species groups shall be identified by the larger numbered species group (i.e., Group 4 is larger numbered than Group 1). Sanded panels with Performance Category of 3/8 or less, and Decorative panels of any Performance Category, that are manufactured with face and back plies of different species groups shall be identified by the face species group number. Sanded panels with Performance Category greater than 3/8 that are manufactured with face and back plies of different species groups shall be identified by the larger numbered species group, except that sanded panels with C or D grade backs shall be permitted to be identified by the face species group number if backs are no more than one species group larger in number than the face and are 3.2 mm (1/8 inch) or thicker before sanding. A class number as provided in Section 5.6.4 shall be used in lieu of a species group number to identify concrete form panels and a span rating shall be used for grades as provided for in Section 5.8.5.

(b) **Bond Classification** — The panel mark shall include the Exterior or Exposure 1 bond classification. Any further reference to adhesive bond, including those which imply premium performance or special warranty by the manufacturer, as well as manufacturer's proprietary designations, shall be separated from the grademarks or trademarks of the testing agency by not less than 152 mm (6 in).

(c) The grade name or the grade of face and back veneers or a mark of a qualified inspection and testing agency. If identified by such a mark, the product specification shall be available from the qualified inspection and testing agency whose mark appears on the panel. MDO and HDO panels with one working face shall include “One Working Face” or “1S” within the grade declaration. MDO and HDO panels with two working faces may include “Two Working Faces” or “2S” within the grade declaration.

(d) The symbol “PS 1-19” signifying conformance with this Standard.

(e) The panel fractional Performance Category (see section 5.10.2) and term “Performance Category” or abbreviation (i.e., PERF CAT, CAT or Category) shall be labeled on the panel. In addition, the thickness in 1000ths of an inch within the permitted tolerance for the Performance Category shall be labeled on the panel. See Appendix D for a table of recommended Thickness labels.

(f) The designation “Butt-Jointed Center” for those panels manufactured with butt joints in center plies in accordance with Section 5.8.

7.4 Voiding marks

Panels originally marked as conforming to this Standard but subsequently rejected as not conforming thereto shall have any reference to the Standard obliterated or voided by the manufacturer as follows:

Shop panels shall be plainly marked by means of a 102 mm by 127 mm (4 in x 5 in) minimum size mark carrying the legend "Shop-cutting panel — all other agency marks void." (See Section 2.56.)

Other panels rejected as not conforming shall be plainly identified by a mark placed next to, and be no less prominent than the original mark, carrying the legend, “REJECT – All other agency marks void”.

No reference shall be made to this Standard in the certification or grade trademarking of panels not conforming to all of the applicable provisions of this Standard.

8. EFFECTIVE DATE

The effective date of this Standard is December 1, 2019. As of the effective date, reference to PS 1-19 shall be permitted in contracts, codes, advertising, invoices, product labels, and the like, but no product shall be advertised or represented in any manner which would imply or tend to imply approval or endorsement of that product by the National Institute of Standards and Technology, the Department of Commerce, or by the Federal Government.

9. STANDING COMMITTEE

A Standing Committee for PS 1-19 will be appointed to be responsible for interpretation and for consideration of future proposals for amendments and revisions to the Standard. The names of the members are available from the Committee’s Secretariat: Standards Coordination and Conformity Group, Standards Services Division, National Institute of Standards and Technology, 100 Bureau Drive, MS 2100, Gaithersburg, MD 20899-2100. Comments regarding the Standard and suggestions for its amendment or revision may also be sent to this address or contact NIST at http://ts.nist.gov/ssd.

Issues regarding interpretation or implementation of the Standard and third-party quality assurance policies and procedures shall be considered by a Standard Implementation Review Subcommittee as appointed by the Standing Committee. A request to consider such issues shall be made in writing to the Secretariat of the Standing Committee (NIST), who will bring it to the attention of the Standing Committee. Formal operating procedures developed for the Subcommittee shall be subject to approval by NIST. Any recommended actions by the Subcommittee will be reported to the Standing Committee for their consideration and action.

Appendix A. Species Grouping (mandatory)

A1 General

Product Standard PS 1 has included provisions for species grouping since the inception of PS 1 in 1966. Prior to PS 1-66, U.S. plywood was manufactured in accordance with three regional plywood standards, Commercial Standard CS45-60 for Douglas-fir Plywood, Commercial Standard CS 122-60 for Western Softwood Plywood and Commercial Standard CS 269-63 for Southern Pine Plywood. Grouping of wood species on the basis of similar mechanical properties in order to provide needed simplification in product manufacture, design and specification became possible with the advent of ASTM D 2555, *Methods for Establishing Clear Wood Strength Values*.

A2 Grouping in practice

Under the provisions of PS 1, it is possible to manufacture span rated plywood Sheathing and Single-Floor on the basis of the species group and plywood construction. Similarly, the plywood group rating or plywood classification of non-span rated plywood may be determined by the species group and plywood construction. PS 1-83 introduced the provisions of determining span ratings on the basis of performance testing. PS 1-95 included a performance-based method for evaluating new species not listed in Table 1, made desirable because of the changing available timber resource for plywood production.

A3 Species grouping

Wood species in Table 1 are grouped on the basis of mechanical properties. Because bending stiffness and bending strength are the most important properties for many plywood uses, species groups were initially set up first on the basis of bending stiffness and second on the basis of bending strength. Past practice of the PS 1 Standing Committee has been to add new species to the highest existing group so long as none of the existing group properties assignments provided in Table A1 are reduced by the addition.

A3.1 Assignment of a species group shall be as follows:

(a) Obtain average and standard deviation data of the five important mechanical properties of clear, straight-grained solid wood of all species in each group in the green and dry condition. The five properties are bending modulus of elasticity (MOE), bending modulus of rupture, compression parallel to grain, shear parallel to grain and compression perpendicular to grain. Property data for North American woods must be included in ASTM D 2555 or must be developed by the U.S. Forest Service or by a recognized Canadian government Laboratory. In addition, new data must be obtained using recognized statistical sampling of the entire growth range of the species. Foreign species are classified using data from the government laboratory in the respective country. Table A2 provides the source of data used to classify non-North American species listed in PS 1. For each of the five properties, the limiting property value that can be assigned to any group that includes that species is determined at the dry (12% for MOE, 15% for all other properties) and green moisture content.

(b) The maximum assignable MOE value is either the species average increased by 10% if volume data is available in ASTM D2555 or the species average if no volume data exists or if it is a foreign species.

(c) The strength properties are calculated in one of the following three methods:

Method A species in ASTM D 2555

Max. Assignable = (species average/variability index) – 1.18 x species standard deviation

Method B species in ASTM D 2555

Max. Assignable = species average – 1.48 x species standard deviation

Domestic species with no volume data and foreign species
Max. Assignable = species average – 1.645 x species standard deviation

The maximum assignable property must meet or exceed all property values listed in Table A1 for the species group in order to be assigned that group.

(d) Assignment of a species group to Table 1 shall be approved by the Standing Committee. (See Section 5.2.)

TABLE A1. CLEAR WOOD PROPERTY ASSIGNMENTS

Species Group	MOE (million psi)		Strength Property (psi)							
			Bending		Comp Par		Shear		Comp Perp	
	Wet	Dry	Wet	Dry	Wet	Dry	Wet	Dry	Wet	Dry
1	1.483	1.857	5300	8064	2425	4123	665	855	193	354
2	1.249	1.588	3662	6297	1833	3163	532	692	124	221
3	1.047	1.310	3681	5985	1548	2662	524	652	123	212
4	0.924	1.146	3483	5389	1570	2630	476	633	97	152
5	0.748	1.100	2843	4345	1190	2187	387	542	73	132

TABLE A2. SOURCE OF DATA USED TO CLASSIFY FOREIGN SPECIES IN PLYWOOD PRODUCT STANDARD PS 1

Common Name or Trade Group	Scientific Name	Source of Data
Group 1		
Apitong	Dipterocarpus spp.	FPL 125 FPL 2242 (bearing only)
Kapur	Dryobalanops aromatica D. lanceolata D. oblongifolia	Malayan Forest Service Trade Leaflet #34 FPL 125 Malayan Forest Service Trade Leaflet #34
Keruing	Dipterocarpus spp. D. baudii D. caudiferus D. cornutus D. crinitus D. lowii	FPL 2242 Malayan Forest Service Trade Leaflet #34 FPL 2242 Malayan Forest Service Trade Leaflet #34 Malayan Forest Service Trade Leaflet #34 Malayan Forest Service Trade Leaflet #34
Caribbean Pine	Pinus caribaea	FPL 125
Ocote Pine	Pinus oocarpa	FPL 125
Group 2		
Red Lauan	Shorea negrosensis	FPL 125 FPL 2242 (bearing only)
Tangile	Shorea polysperma	FPL 125 FPL 2242 (bearing only)
White Lauan	Pentacme contorta	FPL 125 FPL 2242 (bearing only)
Almon	Shorea almon	FPL 125 FPL 2242 (bearing only)
Bagtikan	Parashorea plicata	FPL 125 FPL 2242 (bearing only)
Mersawa	Anisoptera laevis A. marginata	Malayan Forest Service Trade Leaflet #34 Malayan Forest Service Trade Leaflet #34
Mayapis	Shorea squamata	FPL 125
Meranti	Parashorea lucida Shorea acuminata S. singkawang S. curtisii S. dasyphylla	Malayan Forest Service Trade Leaflet #5 Malayan Forest Service Trade Leaflet #34 Malayan Forest Service Trade Leaflet #34 Malayan Forest Service Trade Leaflet #34 FPL 125
	S. hemslevana	Malayan Forest Service Trade Leaflet #34
	S. leprosula S. macroptera	Malayan Forest Service Trade Leaflet #34 Malayan Forest Service Trade Leaflet #34
	S. pauciflora S. platyclados	Malayan Forest Service Trade Leaflet #34 Malayan Forest Service Trade Leaflet #34
	S. rugosa	Malayan Forest Service Trade Leaflet #34
Group 4		
Cativo	Prioria copaifera	FPL 125 Yale Bulletin #98 Tropical Woods (bearing only)

Appendix B. Reinspection Practices (nonmandatory)

B1 General

Based on industry practice, the following information is offered plywood purchasers:

B2 Request for reinspection

Any request by the buyer for the reinspection of any item or lot of plywood certified as conforming to this Standard shall be directed to the seller. Lacking agreement of the buyer and seller as to the settlement of a complaint, the purchase, sale, or shipment of plywood certified as conforming to this Standard shall be construed as involving agreement to submit such plywood to reinspection by the qualified inspection agency whose grademark was used.

B3 Responsibility of the buyer

A request for reinspection shall be made to the seller:

For panel grade — within 30 days after arrival at the first point of receipt from the mill, if the grade of any item, as invoiced, is in doubt;

For adhesive bond quality of Exterior panels — when delamination is visibly evident;

For adhesive bond quality of Exposure 1 — within 6 months after arrival at first point of receipt from the mill if delamination is visibly evident;

All plywood of disputed grade shall be kept intact and properly protected from damage, deterioration and from direct exposure to moisture which could interfere with a fair reinspection. All plywood in question shall be held for a period not to exceed 30 days after the date of request for reinspection. Use by the buyer of any or all of the disputed stock within the 30-day period shall constitute an acceptance of the used portion.

B4 Responsibility of the seller

A request for reinspection shall be promptly acknowledged by the seller following receipt of the request.

B5 Responsibility of the qualified inspection agency conducting the reinspection

Should either the buyer or the seller wish to have a representative present at the reinspection, the agency conducting the reinspection will provide all reasonable accommodation to facilitate that request. Any party wishing to witness the reinspection shall inform the agency of that desire at the time of the initial request for reinspection, and shall be responsible for any costs they incur in order to attend. Costs incurred by the agency performing the reinspection shall be assessed as noted in Section B6.

B6 Cost and assistance

The expense of reinspection shall be borne by the seller if the item, lot, or shipment in dispute fails to pass the reinspection as provided for in Section B7. If the plywood passes the reinspection, said expenses shall be borne by the buyer. The buyer shall lend all reasonable assistance to facilitate the reinspection.

B7 Reinspection procedures and settlement

B7.1 Condition of plywood

All plywood designated as complying with this Standard shall be subject to reinspection in the white (unfinished) only, except that concrete-form material is permitted to have a priming coat of a release agent. This requirement does not apply to Exposure 1 or Exterior plywood when tested for adhesive bond quality.

B7.2 Sampling for panel grade, size and thickness reinspections

At buyer's or seller's option, grade, size, and thickness reinspections shall include all panels of an item whose conformance to this Standard is in dispute; however, agreement between the buyer and seller on a reduced basis for sampling is permitted provided at least 20% or 300 panels, whichever is smaller and which represents only those items as invoiced which are in dispute, are reinspected for conformance. For reduced sampling, the quantity of panels selected from each disputed item shall be prorated according to the number of panels included in each item as invoiced. Panels found to be below grade or out of tolerance for size and thickness shall have improper grademarks obliterated and shall be remarked with appropriate designation with a special inspection mark registered by the qualified agency conducting the reinspection and applied by that agency's authorized representative.

B7.3 Plywood panel grade, size and thickness reinspections

If reinspection establishes that a disputed item is more than 5% below grade or out of dimensional tolerance for the product description as invoiced, that product fails to pass the reinspection and the nonconforming panels need not be accepted. If a disputed product is 5% or less below grade or out of dimensional tolerance, it shall pass the reinspection and the disposition of the nonconforming panels shall be as agreed upon between buyer and seller. In addition to the above 5% grade and dimensional tolerance, a 5% tolerance shall apply separately to the inner ply gap limitations, including the limitations applicable to the plugged crossband and jointed crossband, as set forth in section 5.8.1.

B7.4 Sampling for adhesive bond quality reinspections

For test purposes, twenty panels, or 5% of the panels, whichever is less, shall be selected at random from the item, lot, or shipment which is in dispute. The number of panels required is calculated by applying the "percent panels" to the lot size and converting part panels to whole panels by using a rounding procedure where 0.01 to 0.49 parts are considered to be the smaller whole number, while 0.50 to 0.99 parts are considered to be the larger whole number. These panels shall be selected from locations distributed as widely as practicable throughout the material being sampled. When an item, lot, or shipment involves panels with different adhesive bond requirements as provided for in 5.7, testing and evaluation shall apply separately to each category. Sampling of Exposure 1 plywood or Exterior plywood shall be prorated on the basis of ratio of their volume to total volume (i.e., for shipment containing 50% Exterior, 10 Exterior panels shall be selected), but in no case shall less than 10 panels of each type or adhesive quality be selected. Shipments of Exposure 1 plywood shall be sampled in the same manner as Exterior plywood.

From each of five of the panels selected, a specimen 140 mm by 203 mm (5-1/2 in x 8 in) shall be cut and tested as described in Section 6.1.3.4.

B7.5 Plywood adhesive bond quality reinspections

Reinspection of the unused panels in the disputed item, lot, or shipment shall be carried out following the procedures set forth in Section 6, "Specimen Preparation and Testing," and Section B7.4. If the reinspection tests establish that the adhesive bond quality of the panels does not meet the requirements of Section 5.7, as applicable, the item, lot, or shipment shall fail to pass the reinspection and is not required to be accepted by the buyer. If the adhesive bond quality requirements are met, the item, lot, or shipment shall pass the reinspection and the buyer shall accept the item, lot, or shipment as invoiced, except that the buyer is not required to accept any delaminated Exterior plywood or overlaid panels.

Appendix C. General Information and Comments On Current Edition (nonmandatory)

C1 History of the project

On October 1, 1965, the American Plywood Association (now APA – The Engineered Wood Association) submitted to the National Bureau of Standards (now the National Institute of Standards and Technology) a draft of a proposed Commercial Standard on softwood plywood, with a request that it be processed as a revision and consolidation of Commercial Standards CS 45-60 *Douglas Fir Plywood*, CS 122-60 *Western Softwood Plywood*, and CS 259-63 *Southern Pine Plywood*. On November 1, 1966, Product Standard PS 1-66 *Softwood Plywood, Construction and Industrial* became effective. It was the first Voluntary Product Standard developed under new Department procedures, issued on November 16, 1965, for development of Voluntary Product Standards.

Since 1966, there have been six revisions to the Standard:

C2.1 PS 1-74 *Construction and Industrial Plywood* became effective August 1, 1974

Among other revisions, this version added over 20 species, primarily Southeast Asian hardwoods, to Table 1.

C2.2 PS 1-83 *Construction and Industrial Plywood* became effective December 30, 1983

This version added performance-based test methods and criteria for span rated applications.

C2.3 PS 1-95 *Construction and Industrial Plywood* became effective September 7, 1995

This version included the incorporation of a performance-based method for evaluating plywood manufactured with species not listed in Table 1, made desirable because of the changing available timber resource for plywood production. The revisions included the elimination of Structural II panel grades from the Standard because this product had rarely been manufactured since it was first introduced in PS 1-66.

C2.4 PS 1-07 *Structural Plywood* became effective February 26, 2007

This version revised several sections of the standard to better represent the production and trade specifications for the products. These included a change to the title of the standard, elimination of the interior and intermediate bond types, revisions to the overlaid plywood designations and addition of an appendix to detail the process for species grouping.

C2.5 PS 1-09 *Structural Plywood* became effective May 2010

In response to consumer complaints regarding thickness labeling being out of compliance with NIST Handbook 130 and 133, the standard was revised to create a Performance Category based on customary thickness notations used in U.S. model building codes. In addition, panel labeling requirements was changed to require the Performance Category and decimal thickness representation. Nonmandatory Appendices were added to provide recommended labeling and to provide guidance on quantity representations on bundles.

In addition, nonmandatory Appendices were added to describe formaldehyde emission characteristics of PS 1 panels and how PS 1 panels align with various green building specifications.

C2.6 Current edition, PS 1-19 that became effective December 1, 2019

After considerable technical review by members of the PS 1 Standing Committee, the standard was revised to address the following technical and informational aspects. Additional details were added regarding measurement of dimensions. The term “sized for spacing” was added to denote panels that are sized for compatibility to recommended application for construction uses.

Other technical and editorial revisions were made to reflect industry practices, including:

- Simplification of the Appendix on labeling
- Deletion of the Appendix on Green Building Provisions
- Revised definition of qualified testing and inspection agency
- Added abbreviations commonly used for labeling

Appendix D. (nonmandatory)

D1 Recommend thickness labels

Section 5.10.2 specifies thickness tolerances and Performance Categories for plywood grades. Section 7.3.e specifies that the panels shall be labeled with a thickness label in 1000ths of an inch and that labeled quantity shall be within the minimum and maximum thickness specification for that Performance Category. Table D1 and Table D2 present recommended thickness labels.

D2 Regulations on labeling

See Appendix E for discussion of regulations dealing with labeling.

TABLE D1. RECOMMENDED THICKNESS LABELING FOR UNSANDED, TOUCH SANDED AND OVERLAID PANELS

	Thickness Requirements for Unsanded, Touch Sanded and Overlaid Grades[1]		
Performance Category[2]	**Minimum Thickness in (mm)**	**Maximum Thickness in (mm)**	**Recommended Thickness Label[(3)]**
1/4 PERF CAT	0.219 (5.56)	0.281 (7.14)	Thickness .225 in
11/32 PERF CAT	0.313 (7.94)	0.375 (9.53)	Thickness .322 in
3/8 PERF CAT	0.344 (8.73)	0.406 (10.32)	Thickness .354 in
7/16 PERF CAT	0.406 (10.32)	0.469 (11.91)	Thickness .418 in
15/32 PERF CAT	0.438 (11.11)	0.500 (12.70)	Thickness .451 in
1/2 PERF CAT	0.469 (11.91)	0.531 (13.49)	Thickness .483 in
9/16 PERF CAT	0.531 (13.49)	0.594 (15.08)	Thickness .547 in
19/32 PERF CAT	0.563 (14.29)	0.625 (15.88)	Thickness .578 in
5/8 PERF CAT	0.594 (15.08)	0.656 (16.67)	Thickness .609 in
23/32 PERF CAT	0.688 (17.46)	0.750 (19.05)	Thickness .703 in
3/4 PERF CAT	0.719 (18.26)	0.781 (19.84)	Thickness .734 in
13/16 PERF CAT	0.781 (19.84)	0.844 (21.43)	Thickness .788 in
7/8 PERF CAT	0.831 (21.11)	0.919 (23.34)	Thickness .849 in
1 PERF CAT	0.950 (24.13)	1.050 (26.67)	Thickness .970 in
1-1/8 PERF CAT	1.069 (27.15)	1.181 (30.00)	Thickness 1.091 in
1-1/4 PERF CAT	1.188 (30.16)	1.313 (33.34)	Thickness 1.213 in

[1] [1]Thickness requirements for unsanded, touch sanded and overlaid panels are based on a tolerance of +/- 0.8 mm (1/32 in) for panels with Performance Categories of 13/16 and less and +/- 5% for panels with Performance Categories greater than 13/16 unless a closer tolerance is determined through qualification testing. Inch units are presented as primary units due to customary practice in the United States.

[2] Acceptable abbreviations are PERF CAT, CAT or Category.

[3] The recommended thickness label for categories less than 9/16 is 3% above the minimum. The recommended thickness label for categories greater than or equal to 9/16 are the minimum values for sanded panels.

TABLE D2. RECOMMENDED THICKNESS LABELING FOR SANDED PANELS

	Thickness Requirements for Sanded Panels[1]		
Performance Category[2]	**Minimum Thickness in (mm)**	**Maximum Thickness in (mm)**	**Recommended Thickness Label[3]**
1/4 PERF CAT	0.234 (5.95)	0.266 (6.75)	Thickness .234 in
11/32 PERF CAT	0.328 (8.33)	0.359 (9.139	Thickness .328 in
3/8 PERF CAT	0.359 (9.13)	0.391 (9.92)	Thickness .359 in
7/16 PERF CAT	0.422 (10.72)	0.453 (11.51)	Thickness .422 in
15/32 PERF CAT	0.453 (11.51)	0.484 (12.30)	Thickness .453 in
1/2 PERF CAT	0.484 (12.30)	0.516 (13.10)	Thickness .484 in
9/16 PERF CAT	0.547 (13.89)	0.578 (14.68)	Thickness .547 in
5/8 PERF CAT	0.609 (15.48)	0.641 (16.27)	Thickness .609 in
23/32 PERF CAT	0.703 (17.86)	0.734 (18.65)	Thickness .703 in
3/4 PERF CAT	0.734 (18.65)	0.766 (19.45)	Thickness .734 in
13/16 PERF CAT	0.788 (20.02)	0.837 (21.26)	Thickness .788 in
7/8 PERF CAT	0.849 (21.56)	0.901 (22.89)	Thickness .849 in
1 PERF CAT	0.970 (24.64)	1.030 (26.16)	Thickness .970 in
1-1/8 PERF CAT	1.091 (27.72)	1.159 (29.43)	Thickness 1.091 in
1-1/4 PERF CAT	1.213 (30.80)	1.288 (32.70)	Thickness 1.213 in

[1] Thickness requirements for sanded panels are based on a tolerance of +/- 0.4 mm (1/64 in) for specified performance categories of 3/4 and less and +/- 3.0% for panels with a performance category greater than 3/4 unless a closer tolerance is determined through qualification testing. Inch units are presented as primary units due to customary practice in the United States.

[2] Acceptable abbreviations are PERF CAT, CAT or Category.

[3] Recommended thickness labels for performance categories are based on the minimum permissible thickness for that category.

Appendix E. Labeling Guidelines Based on the Uniform Packaging and Labeling Regulations of NIST Handbook 130 and Handbook 133 (nonmandatory)

E1 Summary

E1.1 When intended for sale or distribution, the labeling of the panels should meet the requirements of the Uniform Packaging and Labeling Regulation. This section provides references to standards applicable to labeling and packaging.

E2 Background

E2.1 The National Institute of Standards and Technology (NIST) of the U.S. Department of Commerce promotes the development of standards to be applied across industry and supports the publishing of NIST Handbook 130, *Uniform Laws and Regulations in the Areas of Legal Metrology and Engine Fuel Quality*. NIST Handbook 130 is a compilation of the latest uniform laws and regulations regarding packaging and labeling requirements adopted by the National Conference on Weights and Measures, Inc. (NCWM) and is intended to represent standards to be adopted into law by the weights and measures jurisdictions of the United States.

E2.2 Procedures used by Weights and Measures inspectors are included in NIST Handbook 133, *Checking the Net Contents of Packaged Goods*

E2.3 For information, a complete copy of the most recent version of NIST Handbook 130 and 133 are available at:

https://www.nist.gov/publications/

Appendix F. Formaldehyde (nonmandatory)

F1 General

Formaldehyde is a simple naturally occurring chemical made of carbon, oxygen and hydrogen. It is produced by the human body and animals and plants. It is also formed by combustion and is an industrial chemical widely used in the manufacture of many consumer products. Background information on formaldehyde and health concerns related to elevated levels in indoor air can be found at www.epa.gov/iaq/formalde.html.

F2 Formaldehyde regulations

F2.1

There are no national or state regulations of formaldehyde emissions expressly stated for PS 1 structural plywood. This is mainly due to the very low emission rates demonstrated by PS 1 Structural Plywood.

F2.2

U.S. Department of Housing and Urban Development Rules and Regulations 24 CFR 3280 for manufactured housing includes § 3280.308 "Formaldehyde emission controls for certain wood products", that deals with formaldehyde emissions from particleboard and plywood. The regulations establish limits for formaldehyde emission levels and ongoing evaluation requirements as follows (underlined emphasis added):

> **(b) *Product certification and continuing qualification.* All plywood and particleboard materials to be installed in manufactured homes which are bonded with a resin system or coated with a surface finish containing formaldehyde, <u>other than an exclusively phenol-formaldehyde resin system</u> or finish, shall be certified by a nationally recognized testing laboratory as complying with paragraph (a) of this section.**

PS 1 Structural Plywood is made predominantly with phenol-formaldehyde adhesives. When made as such, it is exempt from the HUD requirements.

F2.3 California Air Resources Board (CARB) Air toxic Control Measure for Composite Wood Products (see: http://www.arb.ca.gov/research/indoor/formaldehyde.htm)

The CARB ATCM for Composite Wood was approved for implementation on January 1, 2009. The scope of the standard is particleboard, medium Density Fiberboard (MDF) and hardwood plywood. Section § 93120.1 "*Definitions"* explicitly excludes PS 1 Structural Plywood and other structural wood products from the scope of the standard as follows (underlined emphasis added):

(8) "Composite wood products" means hardwood plywood, particleboard, and medium density fiberboard. "Composite wood products" <u>does not include hardboard, structural plywood as specified in the *Voluntary Product Standard - Structural Plywood* (PS 1-07)</u>, structural panels as specified in the *Voluntary Product Standard – Performance Standard for Wood-Based Structural-Use Panels* (PS 2-04), structural composite lumber as specified in *Standard Specification for Evaluation of Structural Composite Lumber Products* (ASTM D 5456-06), oriented strand board, glued laminated timber as specified in *Structural Glued Laminated Timber* (ANSI A190.1-2002), prefabricated wood I-joists as specified in *Standard Specification for Establishing and Monitoring Structural Capacities of Prefabricated Wood I-Joists* (ASTM D 5055-05), finger-jointed lumber, or "composite wood products" used inside of new vehicles as defined in section 430 of the California Vehicle Code (excluding recreational vehicles), railcars, boats, aerospace craft, or aircraft.

F2.4 National "Formaldehyde Standards for Composite Wood Act"

The Formaldehyde Standards for Wood Composites Act was signed into law on July 7, 2010. With respect to PS 1 panels, this law is identical to the CARB ATCM for Composite Wood (see Section F2.3). PS 1 panels are exempt from the scope of the Formaldehyde Standards for Composite Wood Act. For further information see: https://www.epa.gov/

F3 Formaldehyde emission from PS 1 Plywood

F3.1

Information on formaldehyde emission from PS 1 panels is available from APA in Technical Note J330, *Formaldehyde and Engineered Wood Products* (see: www.apawood.org).