MBD for SE & ALRE

Sponsored by: The Commercial Technologies for Maintenance Activities & National Center of Manufacturing Sciences

Introduction and Highlights

- Presenter
  - John Schmelzle
    - SE Design and Analysis Branch Head, NAVAIR

- Session Highlights
  - NAVAIR transition from 2D drawings to MBD
  - Definition of 3D TDP using PDF
  - Summary of expected benefits

Sponsors

- Anark
- CTMA
- DARPA
- ITI TranscenData
- Penn State ARL

Acronyms

- **ALRE**: Aircraft Launch and Recovery Equipment
- **AM**: Additive Manufacturing
- **CTMA**: Commercial Technologies for Maintenance Activities
- **DOD**: Department of Defense
- **JEDMICS**: Joint Engineering Data Management Information and Control System
- **LKE**: Naval Air Engineering Station, Lakehurst, NJ
- **MBD**: Model Based Definition
- **NCMS**: National Center for Manufacturing Sciences
- **NAWCAD**: Naval Air Warfare Center Aircraft Division
- **PDDS**: Product Definition Data Set
- **SE**: Support Equipment

The Rationale for 3D MBD

Current design process:

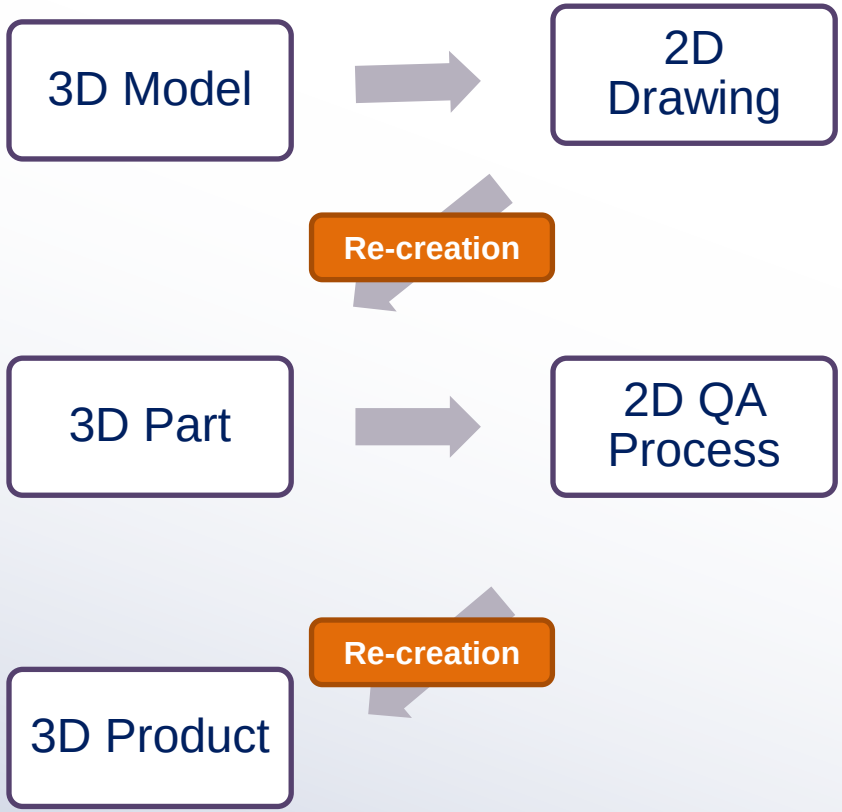

3D Drawing design process:

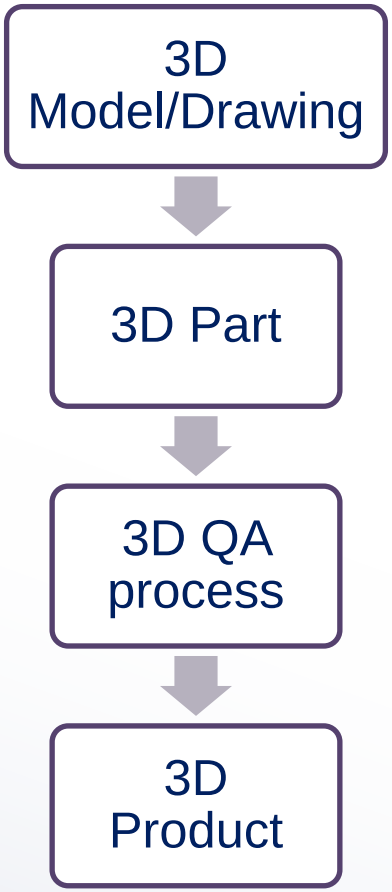

PDDS vs. MBD in Engineering

PDDS:

- Fully Annotated Model:
  - Model Used similar to conventional 2D drawing.
  - Fully dimensioned.
  - Part not defined by the model, but is defined by the dimensions on the model.
- 2D Drawing with an Associated Model:
  - Similar to the fully annotated model;
  - Has 2D drawing with associated model.

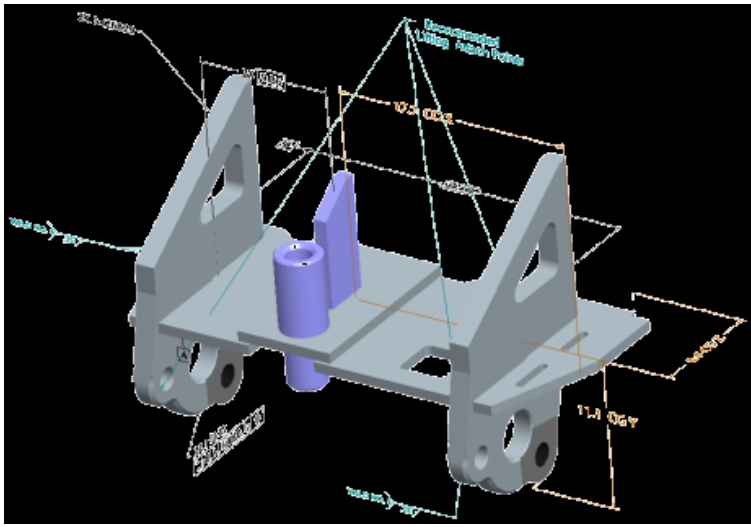

MBD:

- Different from the fully annotated model
- Model itself defines the part
- In true MBD, dimensions are optional and only used at the discretion of the cognizant engineer.
- The model is toleranced geometrically often using surface profile tolarancing.
- Accuracy of model becomes critical.
- Need for Verification

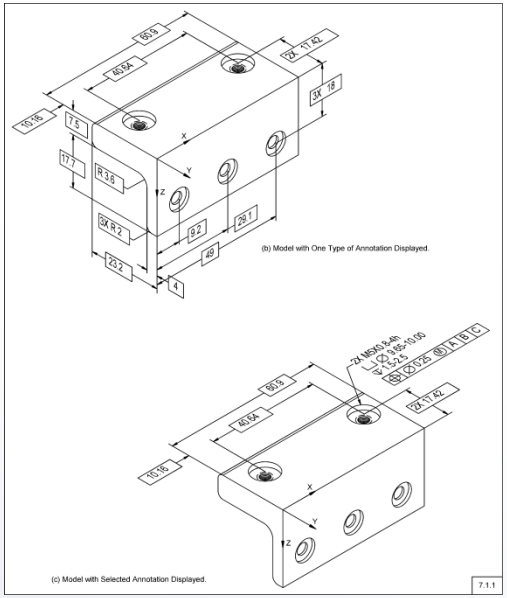

3D TDP Definition at NAWCADLKE

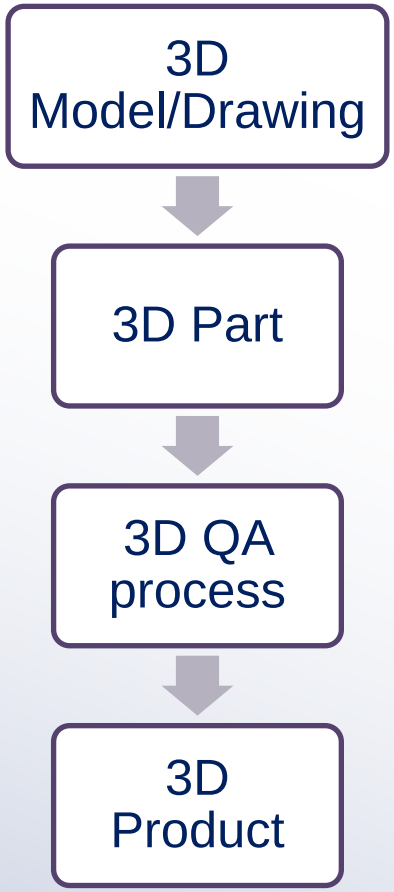

- PDF file
- Sheet 1
  - Critical metadata and traditional drawing information
- Sheet 2
  - 3D PDF visualization file
- Embedded attachments
  - STEP 214 neutral file
    - STEP file used for import to drive downstream CAM equipment
  - Validation certificate

3D PDF Platform

- Neutral File Format
- In Accordance with ASME Y14.41
  - Need to Publish/Approve
- Readily Readable Format
- Compatible with JEDMICS
- Long Term Archiving and CAM compatibility
  - Embedded STEP

Proprietary and Open Format Considerations

- The intellectual property belongs to the developer regardless of how much detail is provided to the third-party application providers.
- The developer has control over the definition of the standard, and can change it at will with or without the advice and consent of the user community.
- The developer can also determine who has access to the format and for what purpose, regardless of the value to the user community.

The NAWCADLKE 3D PDF: Sheets 1 & 2

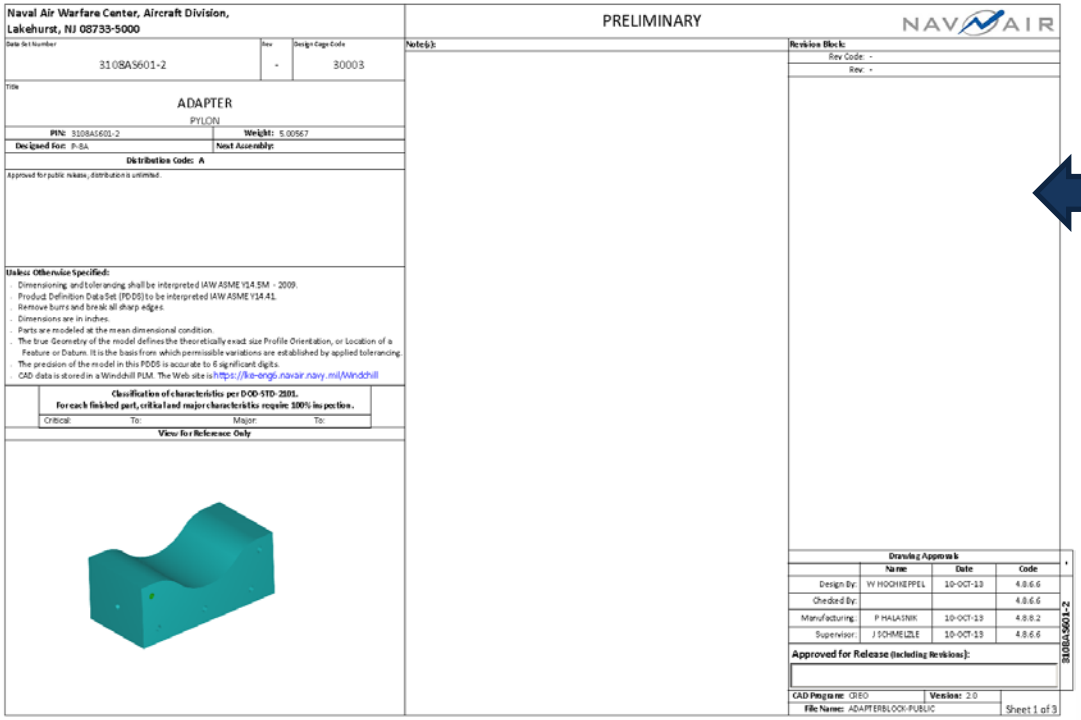

Naval Air Warfare Center, Aircraft Division,
Lakehurst, NJ 08733-5000

PRELIMINARY

NAVAIR

Data Set Number: 3108AS601-2 | Rev: - | Design Cage Code: 30003

Title: ADAPTER
PYLON

PIN: 3108AS601-2 | Weight: 5.00567

Designed For: P-8A | Next Assembly:

Distribution Code: A

Approved for public release, distribution is unlimited.

Unless Otherwise Specified:
- Dimensioning and tolerancing shall be interpreted IAW ASME Y14.5M - 2009.
- Product Definition Data Set (PDDS) to be interpreted IAW ASME Y14.41.
- Remove burrs and break all sharp edges.
- Dimensions are in inches.
- Parts are modeled at the mean dimensional condition.
- The true Geometry of the model defines the theoretically exact size Profile Orientation, or Location of a Feature or Datum. It is the basis from which permissible variations are established by applied tolerancing.
- The precision of the model in this PDDS is accurate to 6 significant digits.
- CAD data is stored in a Windchill PLM. The Web site is https://lke-eng6.navair.navy.mil/Windchill

Classification of characteristics per DOD-STD-2101.
For each finished part, critical and major characteristics require 100% inspection.

Critical:	To:	Major:	To:

View For Reference Only

Note(s):

Revision Block:
Rev Code: -
Rev: -

Drawing Approvals

	Name	Date	Code
Design By:	W HOCHHEPPEL	10-OCT-13	4.8.6.6
Checked By:			4.8.6.6
Manufacturing:	P HALASNIK	10-OCT-13	4.8.8.2
Supervisor:	J SOHMELZLE	10-OCT-13	4.8.6.6

Approved for Release (Including Revisions):

CAD Program: CREO | Version: 2.0
File Name: ADAPTERBLOCK-PUBLIC | Sheet 1 of 3

3108AS601-2

Sheet 1
(Distribution Statement and Notes Section for Producibility)

Sheet 2
(Parts/Subcomponents listing, only used in Assembly Template)

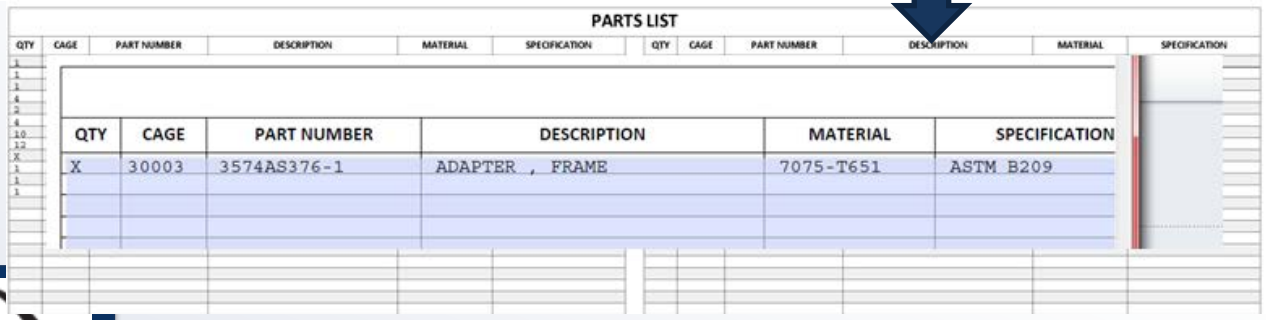

PARTS LIST

QTY	CAGE	PART NUMBER	DESCRIPTION	MATERIAL	SPECIFICATION
X	30003	3574AS376-1	ADAPTER , FRAME	7075-T651	ASTM B209

Generated by Anark Core software

NAVAIR

Sheet 2 (parts) or 3 (assemblies)

PART NUMBER	NOMENCLATURE	QTY
3108AS601-2	PYLON, ADAPTER	1
3108AS601-4	, U-BRACKET	1
3108AS601-3	ADAPTER, BLOCK	1
M45913/1-4FS6	.250-20 UNC, NUT, SLF	4
MS24693-C108	.250- 28 X .963 UNJF,	2
MS24693-C108	1/4-20 X 2.50, SCREW,	4
MS24693-C108	1/4-20 X 2.50, SCREW,	10
NAS1394C4L	EXT .375-16 UNC,.375	12
3108AS601-1	PYLON ADAPTER, ASSEMB	X
3108AS601-5	RUBBER 30A, PAD	1
3108AS601-6	RUBBER 30A, PAD	1
B-45TH	EPOXY, ADHESIVE	1

Show All

Isolate | Zoom Fit

Decimal Tolerances: X.XXX ±

(Unless Otherwise Specified) X.XX ±

∠ ±

Available Views:
('Hover' to preview, 'Click' to activate)

- 10_REF_ISO
- 20_ANNOTATE_1

<< < > >>

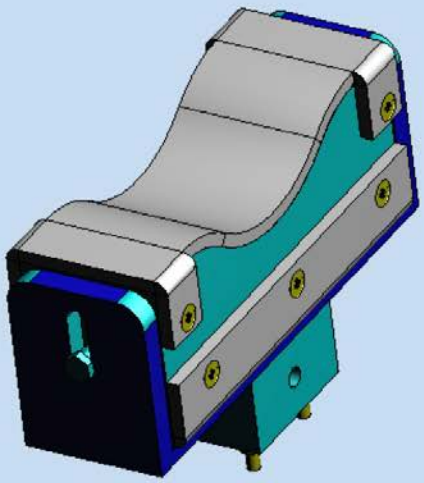

3108AS601-1

Rev: | Design Cage Code: 30003 | Title: PYLON ADAPTER, ASSEMBLY

Sheet 3 of 3

Generated by Anark Core software

Producibility in MBD

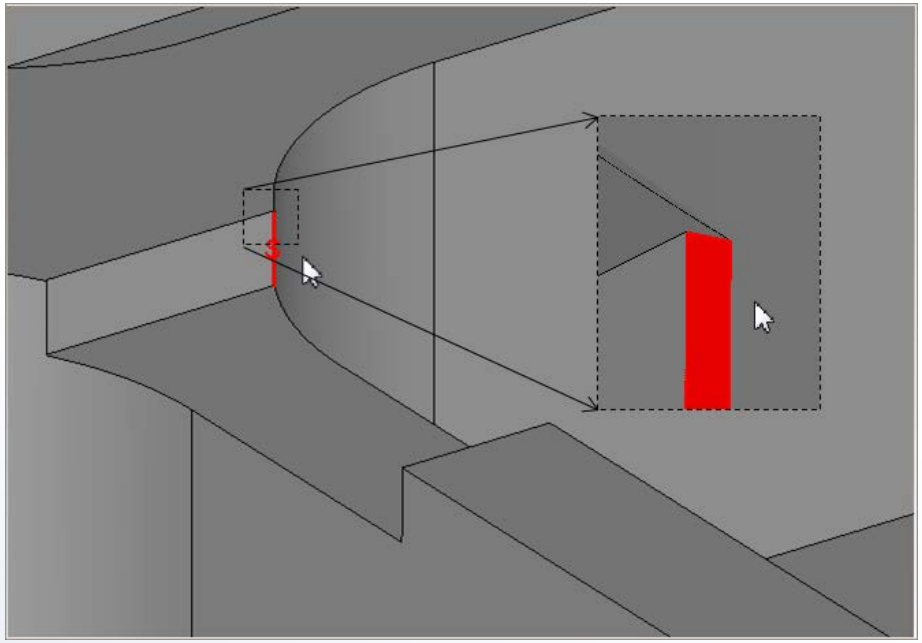

Overhanging Fillet
The indicated fillet extends out to form a sharp edge (see inset image).

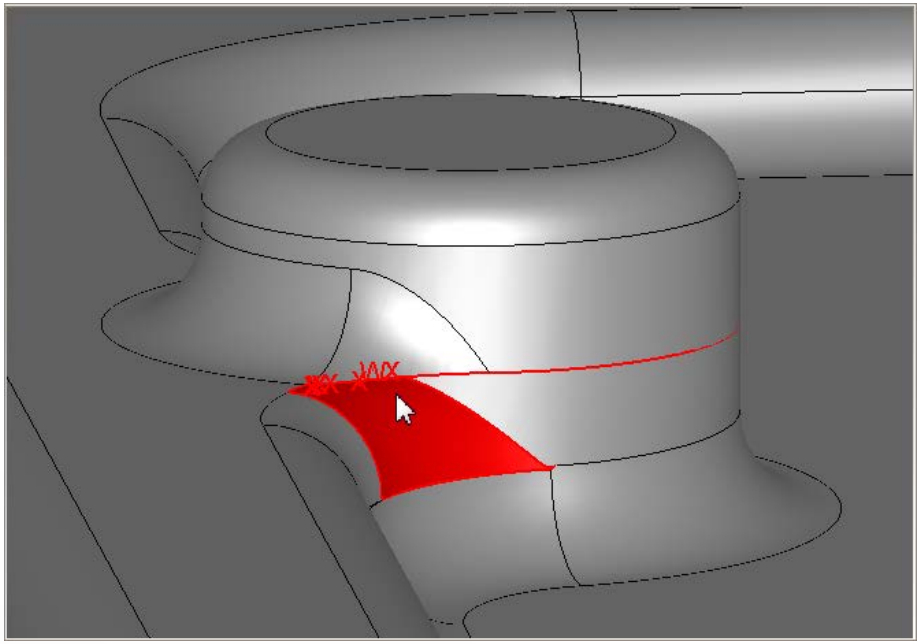

Undercut Feature
The highlighted fillet cuts under the upper part of this feature.

Generated by ITI CADIQ software

Producibility Savings

Product Development (in design)	Supply Chain (in fabrication)	Manufacturing Build (in assembly)	Customer (in service)
Producibility analysis during design process a) Designer identifies and eliminates issue or b) Checker identifies issue during release process	Without producibility analysis – supplier determines there is issue and Initiates change request (ECO required)	Without producibility analysis or Supplier initiated change – issue discovered during unit assembly or test and a) Requires ECO and material disposition	Without producibility analysis or Mfg initiated change – issue discovered by customer or in service and a) Requires ECO, material disposition and possibly a Service Bulletin
• 1-2 hours to resolve finding when identified during in-process design • May require more time and possibly affect program schedule if identified during the release process	• Hours or days to resolve finding when supplier engages Rockwell Collins • Part conformance risk (AS9102 concern) • May affect delivery and build schedule • Possible no-bid from qualified supplier • Increased part cost – complex tooling / process of low-yield fabrication • Cost to complete ECO	• Hours or days to resolve finding – possibly weeks if TTR required • Affects build schedule and may affect overall program schedule • Possible contract penalties for delivery misses • Increased production cost –scrap or rework, material disposition, etc. • Cost to complete ECO	• Days or weeks to resolve finding – possibly months for warranty or service bulletin to be completed • May cause system failure/repair • Affects customer program • Possible contract penalties, warranty costs, SB costs, fleet costs, etc. • Increased repair cost – scrap and rework, material disposition, field service, fleet down-time, etc. • Cost to complete ECO / SB • Reduced customer satisfaction
1-2 hours **$100's**	**hours/days** **$1K's**	**days** **$10K's**	**weeks/months** **$100K's**

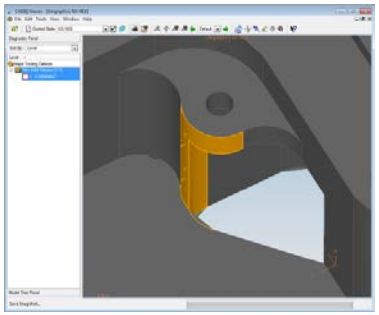

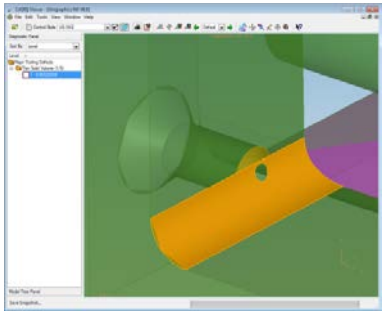

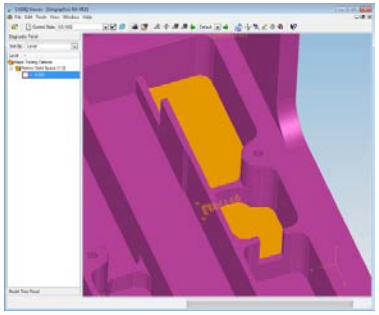

← Time to Resolve

← Relative Total Cost

NAVAIR

Verification in MBD

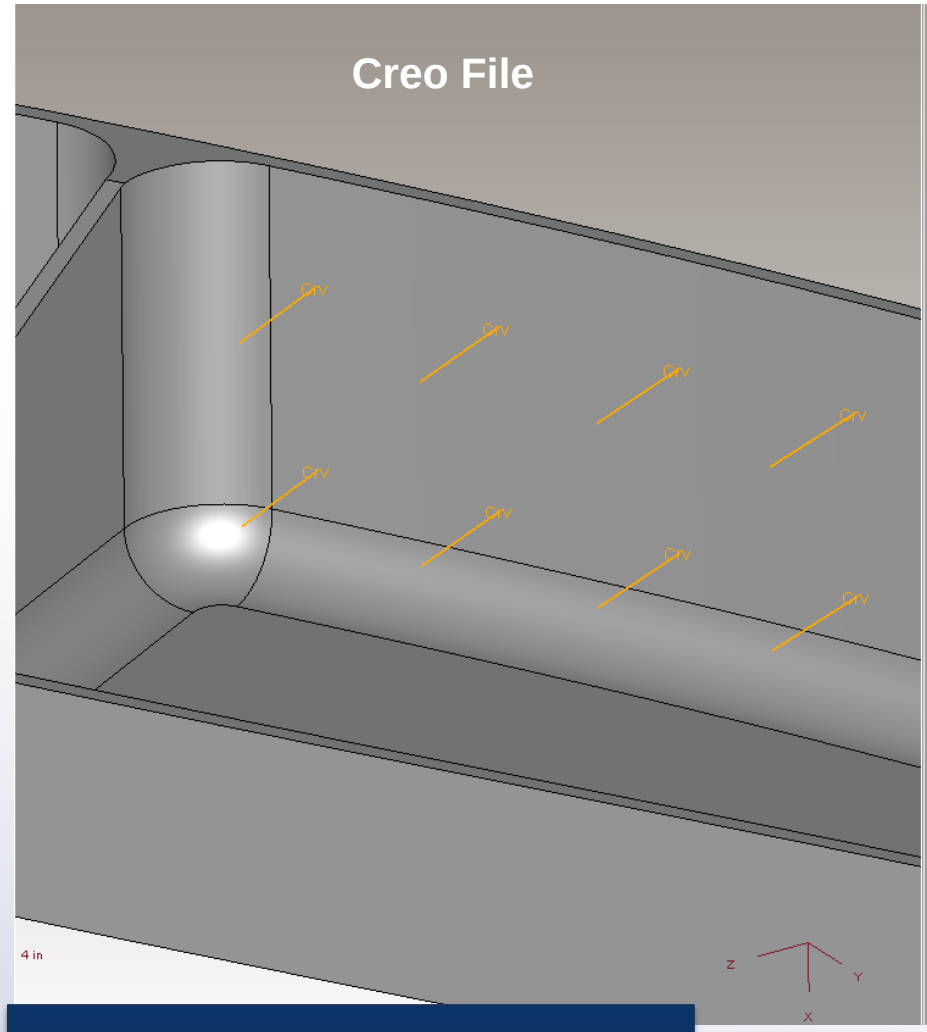

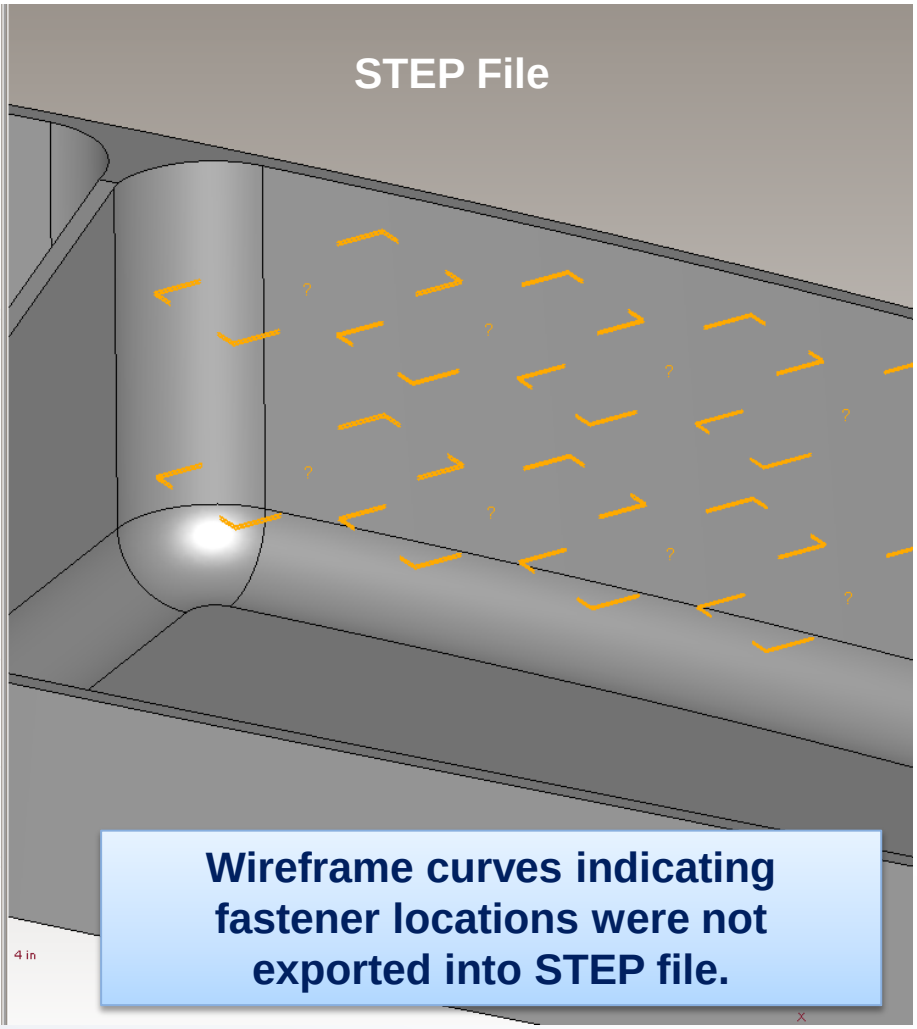

Wireframe curves indicating fastener locations were not exported into STEP file.

Generated by ITI CADIQ software

Monetary Benefits

- Realized benefits
  - 30% reduction in part fabrication
  - 10% reduction in other areas

Expected Savings Generated through MBD			
Commodity	**Annual Funding**	**Savings (%)**	**Savings ($)**
Part fabrication	**$10,000K**	**30%**	**$3,000K**
Assembly	**$2,000K**	**10%**	**$200K**
QA	**$2,000K**	**10%**	**$200K**
		Total Savings:	**$3,400K**

- Expected benefits
  - 30% reduction in engineering time
  - Not realized in pilot due to full 3D dimensioning of models (done to ease transition from drawing downstream)

Non-monetary Benefits

- Improved communication and collaboration of engineering, manufacturing, and all project stakeholders
- Reduction in cycle time for new designs process
- Significant manufacturing error reduction resulting in significant cost-savings in avoidance of rework
- More effective allocation of resources

Additive Manufacturing

Hydraulic Manifold used in the V-22 Drag Strut Retract Actuator Test Stand

DLS 17-4ph Stainless Steel

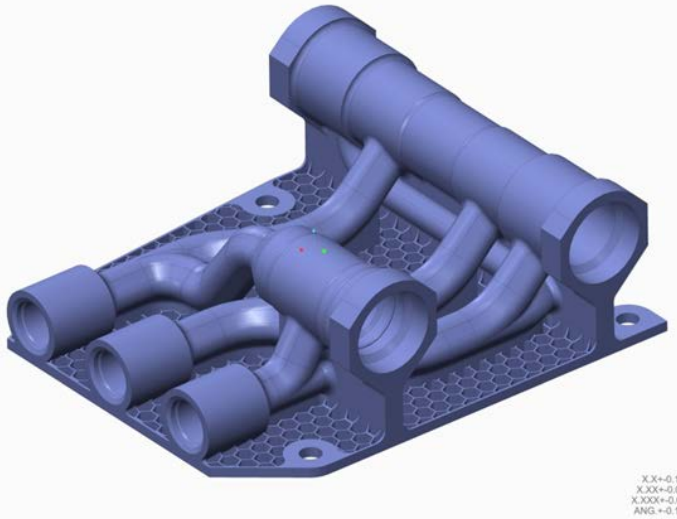

Design Accomplishments

- 70% reduction in weight
- Smaller foot print
- Improved fluid flow
- Fewer leak points

Generated by Penn State ARL

Application & Benefit

- Design driven manufacturing
  - Do not have to design for manufacturing producibility
- Design limited only by human imagination
  - Topology Optimization
- Complexity does not increase cost
- Ability for mass customization
- Rapid qualification of small lots of parts..

Challenges

- 3D CAD models are often not suitable to ensure manufacturing quality
- Capability to procure 3D models
- Capability to inspect 3D models
- Development of 3D Technical Data Package that incorporates a model-based definitions
- Material & AM process qualification

AM & MBD

- AM offers the ability to create complex designs never before imagined

- Many of these designs are too complex to document in a conventional 2D drawing

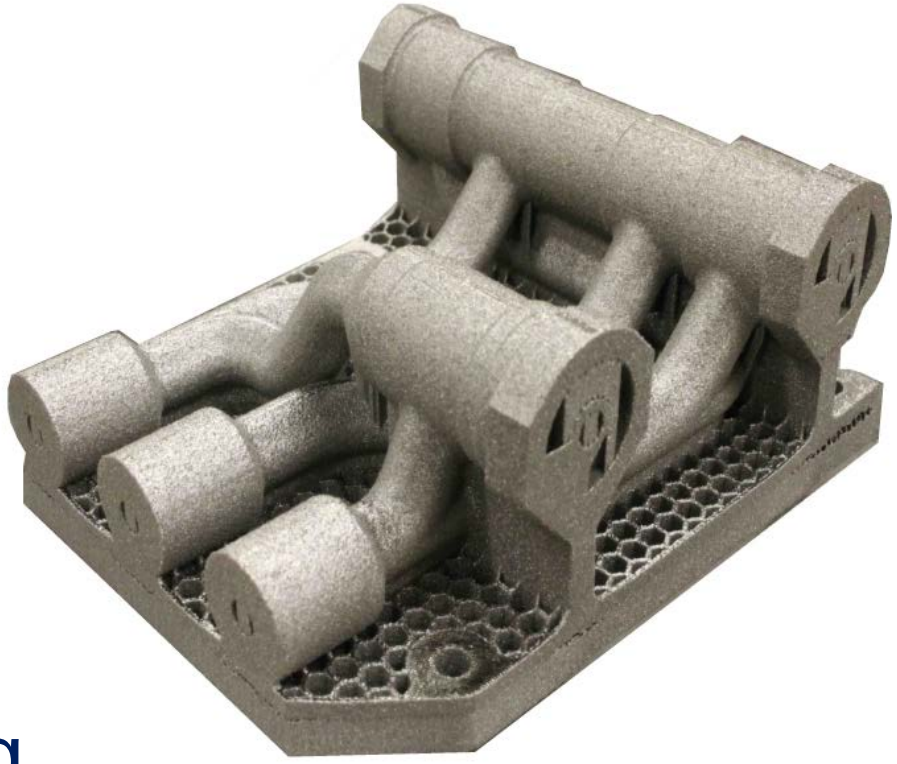

Picture of the 3D Manifold

- Only through MBD, can these new designs be properly documented.

AM & MBD

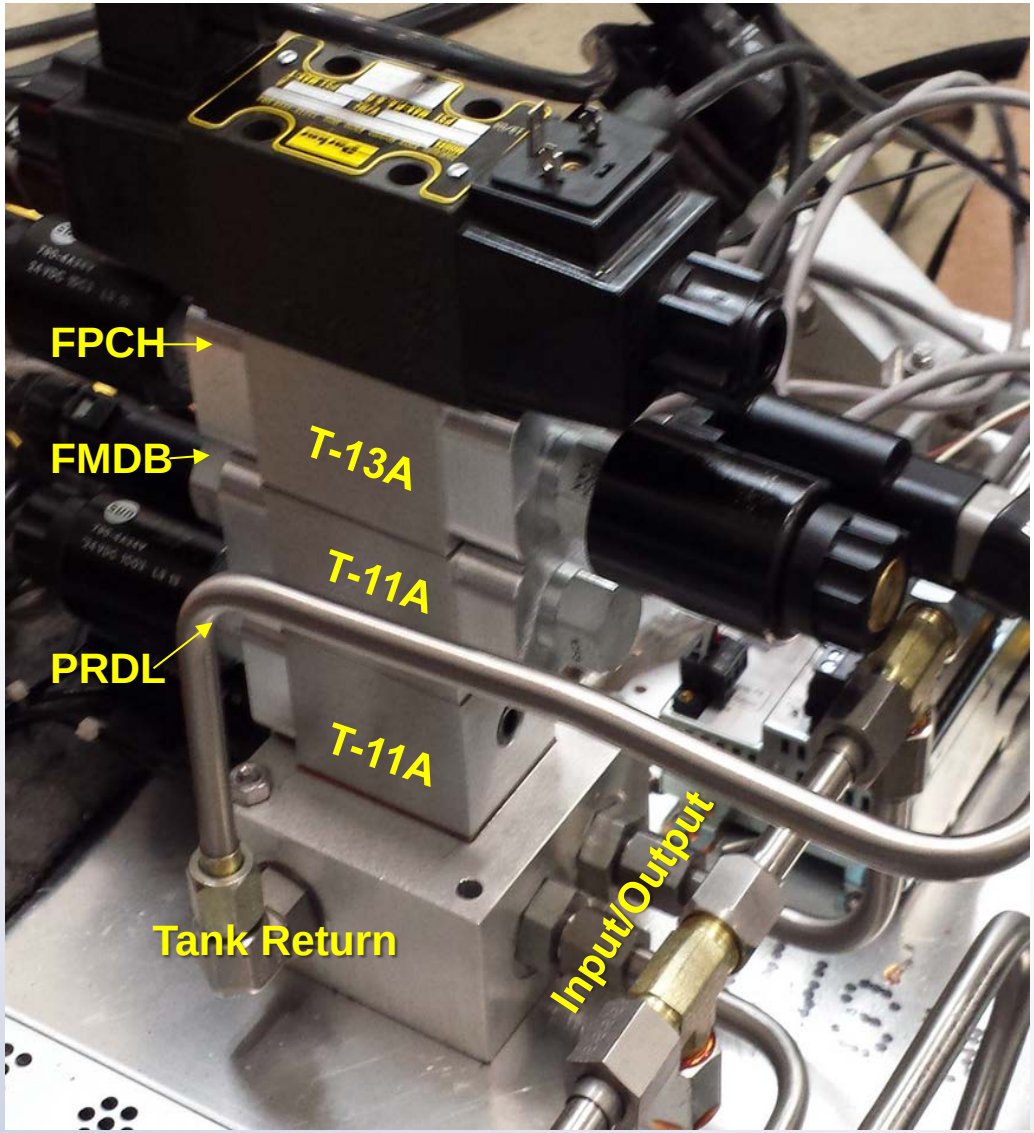

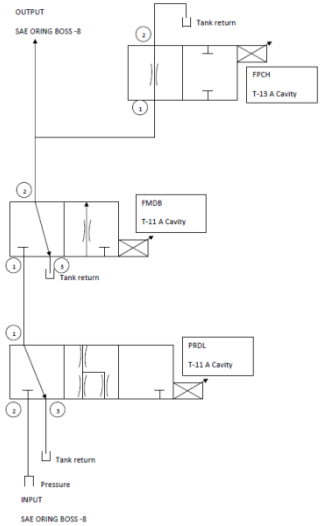

Existing manifold is heavy and bulky.

MBD Challenges

- The new Culture of a dimensionless drawing
  - Implied 90 degree requirement
- QA
  - Increase in cost due to GD&T
- No Paper

Next Steps

- Gather additional metrics
- PLM Integration
- Workflow automation
- Validation of 3D PDF graphics
- Expanded use of 3D PDF
  - Model-Based Work Instructions
  - Inspection Reports
- MBD Expansion

Next MBD Project

E-2D Rotodome Antenna Maintenance Stand

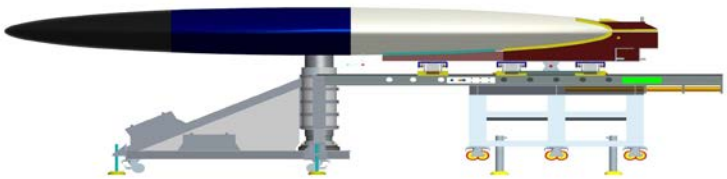

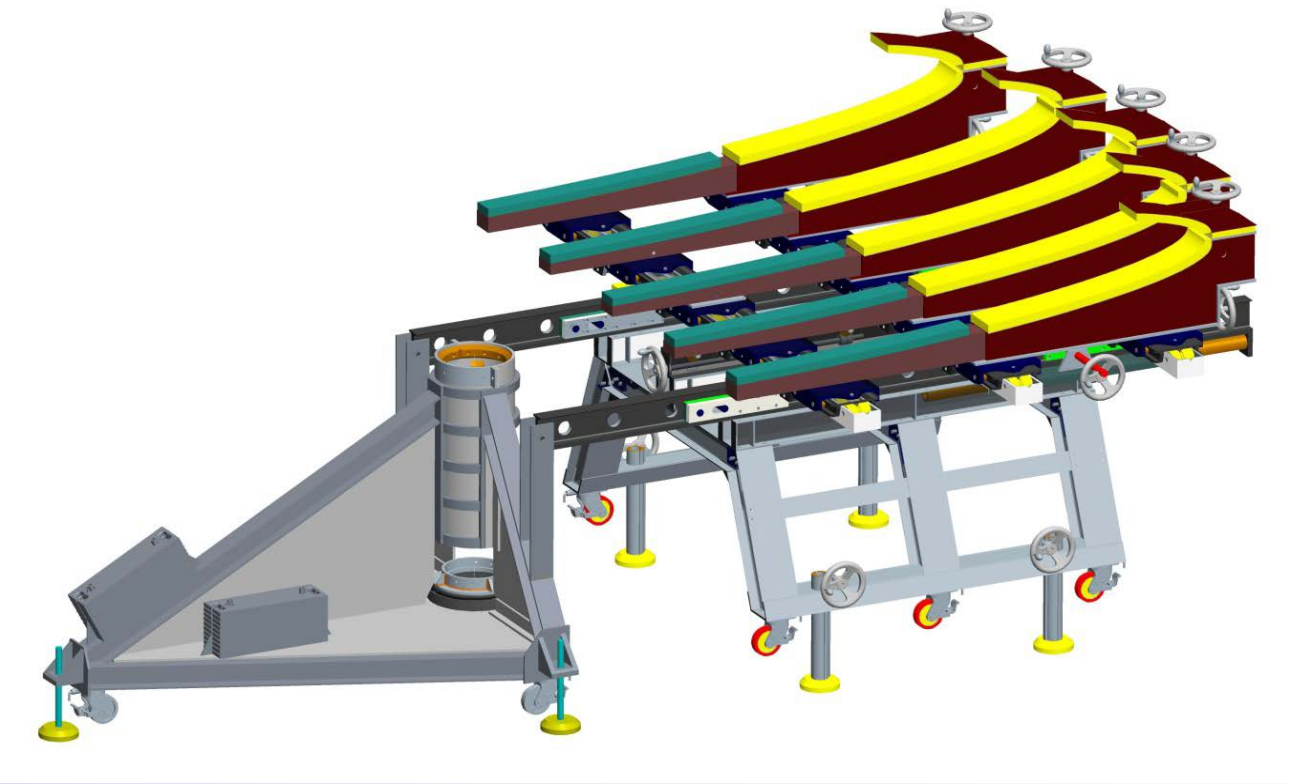

Additional Information

- NAWCADLKE-DDR-486600-0010
  - Summary and results of the CTMA, MBD for ALRE & SE Project

- NAWCADLKE-DDR-486600-0008
  - 3D PDF as the solution for MBD.

- John Schmelzle

  john.schmelzle@navy.mil

Thank You!