MBE SUMMIT 2014

Technical Data Package (TDP) for the Digital Enterprise

Kong Ma, Rolls-Royce Corp kong.ma@rolls-royce.com
Andrew Hall Rolls-Royce Corp andrew.hall2@rolls-royce.com
Rich Eckenrode RECON-Services rich.eckenrode@recon-services.com

©2011 Rolls-Royce Corporation
The information in this document is the property of Rolls-Royce Corporation and may not be copied or communicated to a third party, or used for any purpose other than that for which it is supplied without the express written consent of Rolls-Royce Corporation.
This information is given in good faith based upon the latest information available to Rolls-Royce Corporation, no warranty or representation is given concerning such information, which must not be taken as establishing any contractual or other commitment binding upon Rolls-Royce Corporation or any of its subsidiary or associated companies.

TDP-RR Programmatic Summary

- **Program Duration – 1/2013 to 12/2014, extended to 4/30/2015**

- **Team Members –**
  - **Rolls-Royce Corporation (Program lead)**
  - **Recon Services Inc. (Technical consultant)**
  - **Siemens (CAD vendor)**
  - **Elysium (3rd party software vendor)**
  - **ATC Ladish (Supplier)**
  - **J&L Dimensional Services Inc (Supplier)**
  - **LMI (TDP business case lead)**

TDP-RR Programmatic Summary

Software involved

- Siemens - NX7.5, NX9
- Siemens - Teamcenter
- Siemens - BCT Inspector
- Siemens - Teamcenter Visualization (JT)
- Siemens - JT2Go
- Elysium - ASFALIS
- Elysium - Validator (pre-release)
- ANARK - 3D PDF
- Core Technologie- 3D Evoluation
- PTC - Creo

Program Objectives

- Demonstration of process and tools that enable the use of interoperable standards within supply chains.
- Create a Best Practice guideline for 2D to 3D Conversion Validation &Verification (V&V) with semantic PMI and dimensional data.
- Create a Lessons Learned report
- Conduct a V&V Demo Based On The Above

Remarks:

- *PMI is still an evolving technology in the industry, in both the software vendors and organizations in the supply chain.*
- *Lessons learned will be shared with vendors and committees*

TDP Program- The Round Trip of Models

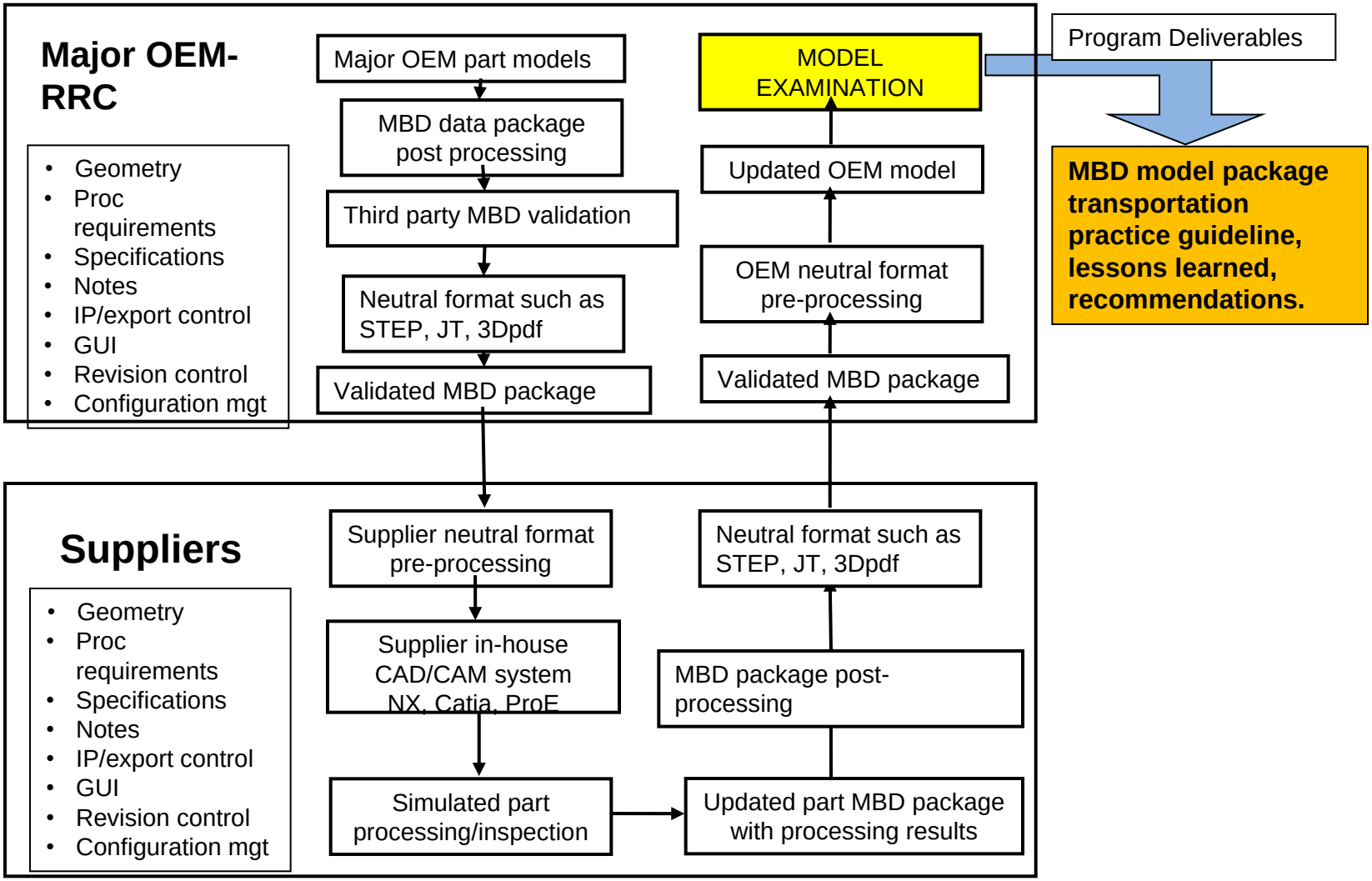

NIST Models Solve ITAR/Proprietary Issues

We needed a method to communicate required software improvements to software suppliers.

Software partners have international development teams and management.

Solution: Use NIST NX models with matched requirements to demonstrate DMS&T program needs to software suppliers.

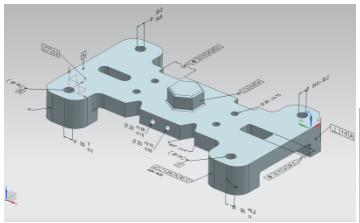

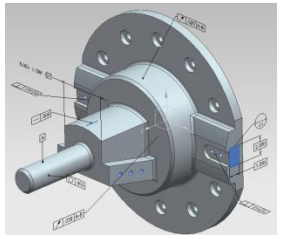

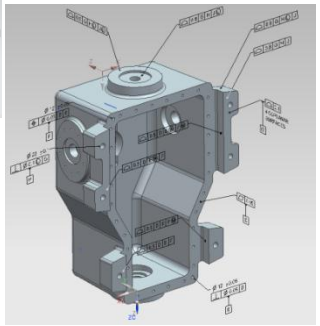

TDP Test Models			NIST Test Models					ANSI Y14.5	
Disc	Blade	Housing	CTC 1	CTC 2	CTC 3	CTC 4	CTC 5		
					ATC 13			1.7.6	Reference Dimension
X					ATC 36, 45, 5,			1.8.1	Diameter
					ATC 9,			1.8.11	Counterbored holes
								2	Section 2 General Tolerancing and Related Principles
X	X	X	ATC 8					2.2	Direct Tolerancing Methods
X	X		ATC 1, 2, 3, 4					2.3	Tolerance Expression
								2.4	Interpretation of Limits
X	X							2.5	Single Limits
	X				ATC 6			2.6	Tolerance Accumulation
X		X						2.7	Limits of Size
									Applicability of Modifiers on Geometric Tolerance Values and Datum Feature
								2.8	References
								2.9	Screw Threads
X								2.10	Gears and Splines
								2.11	Boundary Conditions
X	X		ATC 4,					2.12	Angular Surfaces

NIST
National Institute of Standards and Technology

MBE PMI Validation Test Case Example

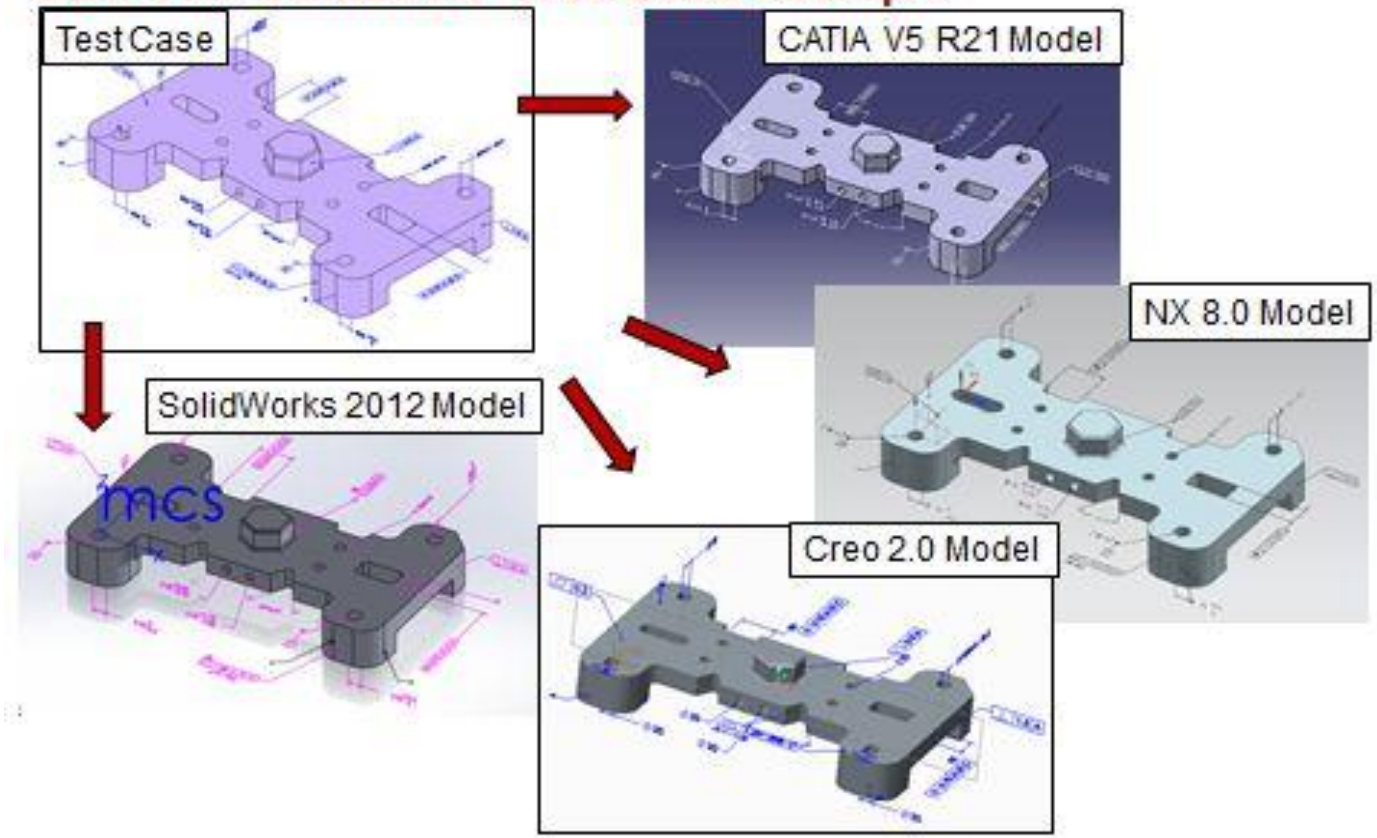

Benefits

- **Semantic PMI based MBD enable <u>machine interpretable</u> product definitions**
  - **For inspection and machining**
  - **Knowledge/design intent sharing**
- **<u>Data re-use</u> by supplier downstream systems and processes (e.g. manufacturing, inspection).**
  - **Reduced time for data re-entry into machining software**
  - **Reduced information redundancy**
  - **Reduced human interpretation errors**
- **Reduce re-work (models & parts) and scrap (parts)**
- **Program benefit: software and process improvements for TDP creation and consumption**

Conclusions

1. **Drawing Based**
   Master 2D Drawing
2. **Model Centric**
   3D CAD model with Master 2D drawing
3. **Model Based Definition**
   Master 3D CAD model with 3D Annotated Model, 2D drawings by exception
4. **Model Based Enterprise**
   Master 3D CAD model with 3D Annotated Model, fully leveraged by the Enterprise

- Majority of the industry basically migrated from stage 1 to 2; only pockets of success reaching stage 3 but still relatively in the silo mode.
- Software are not robust enough and lack of standard of practice.
- Standards can have 2 aspects: ***Format and Process***
- Make Standards work for you, not just a mechanical requirement that we need to comply with.
- Full adoption of semantic PMI based MBD has been relatively slow.

Conclusions

Model Creation:

- **PMI creation in the correct way is crucial for enabling true MBE**
- **Current tradition is still in the drawing mind-set when designing in a 3D solid model space.**
- **Requirement of designers to have knowledge of downstream consumptions in order to achieve proper PMI definition- *A paradigm shift* for 'Design For Manufacturability'.**
- **Certain section views and annotations (partially dimensioned) should be needed for complete definitions.**
- **MIL-STD31000A should be the base for the MBD Schema. Software vendors should be familiar with MBD Schema requirements to comply with Schema needs.**
- **Industry standards and company derivatives must be shared and used with suppliers**

Annotated Test Models with PMI

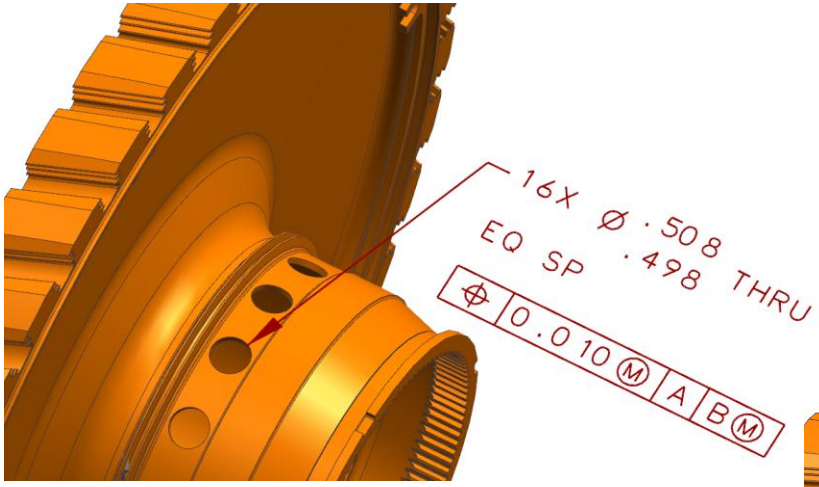

3D Annotation on an
Turbine Disk Model
With unassociated PMI
(require human interpretation)

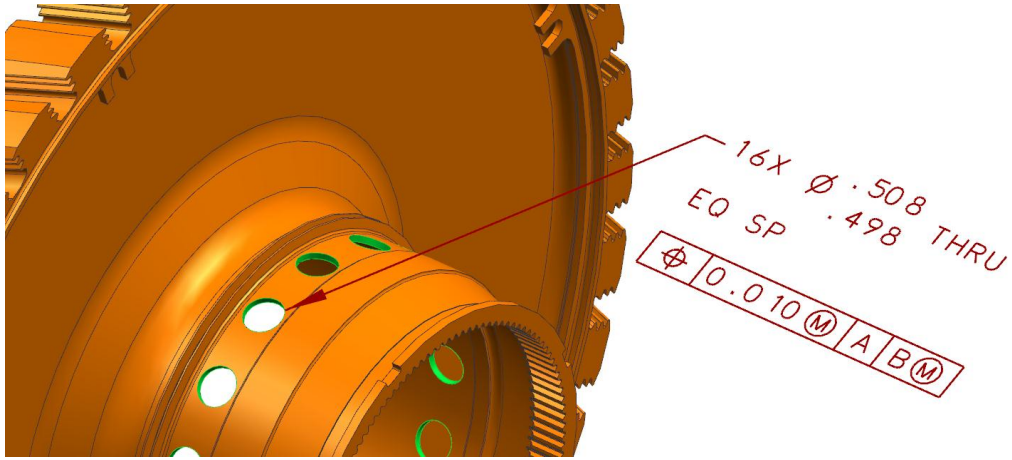

3D Annotation on an
Annotated Turbine Disk Model
With associated PMI
("machine-interpretable")

Conclusions

Model Translations :

- **Translations must preserve the original design intent by using associativity which needs to be preserved through all derivative files.**
- **3 main neutral formats: STEP, JT, & 3D PDF. STEP (AP203/214) usage holds the mathematical equivalent while JT and PDF represent the graphical equivalent.**
- **STEP AP-242 is close to be released; substantial efforts behind the scene in industry.**
- **Model translation, Verification & Validation, and traceability are critical. Capable tools for handling semantic PMI are yet to be commonly available.**
- **Maintaining correct MBD schema after translation has presented challenges. Software vendors need to be educated in the use of MBD schemas.**
- **Multiple ways to generate a selected derivative model and all somewhat different.**
- **Geometric (for light weight formats), annotation and attribute translations are not robust.**
- **Tabulated data association with 3D geometric features are yet to be available for bi-directional translation.**
- **Going through proprietary 3rd party software neutral format sometimes involves multiple translations.**
- ***While technology is evolving, establishing practice standards can minimize variations.***

Furball Discussion

MBD Schema required and followed to tame the Furball display in NX

The application of the schema is required to flow to all derivative models.

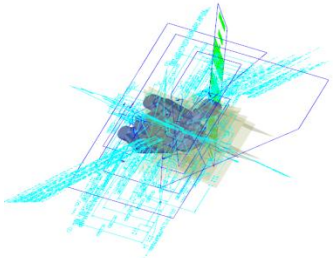

PDF Furball

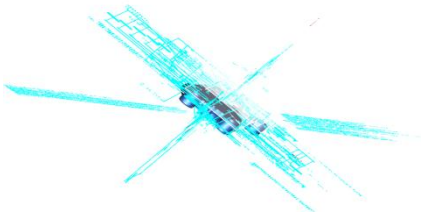

JT Furball

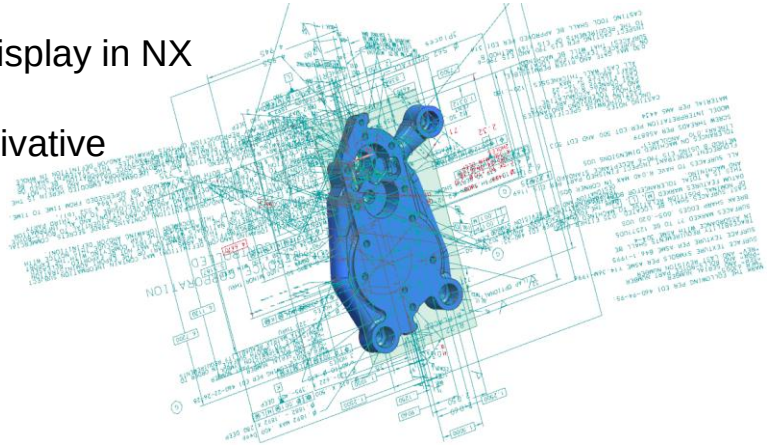

NX 7.5 View of the Furball

Make the derivative models look exactly like the Native CAD Model

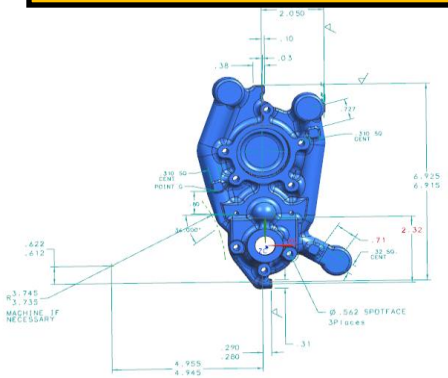

Native NX 7.5

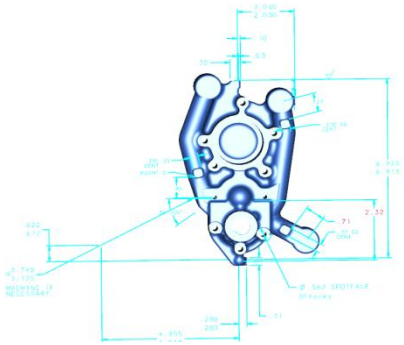

JT Viewable File

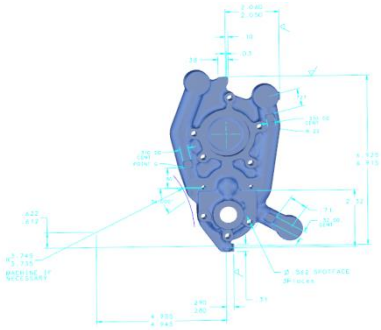

PDF Viewable file

Lessons Learned- Intricate Alternatives In Model Transfer

Pre-Processing Example

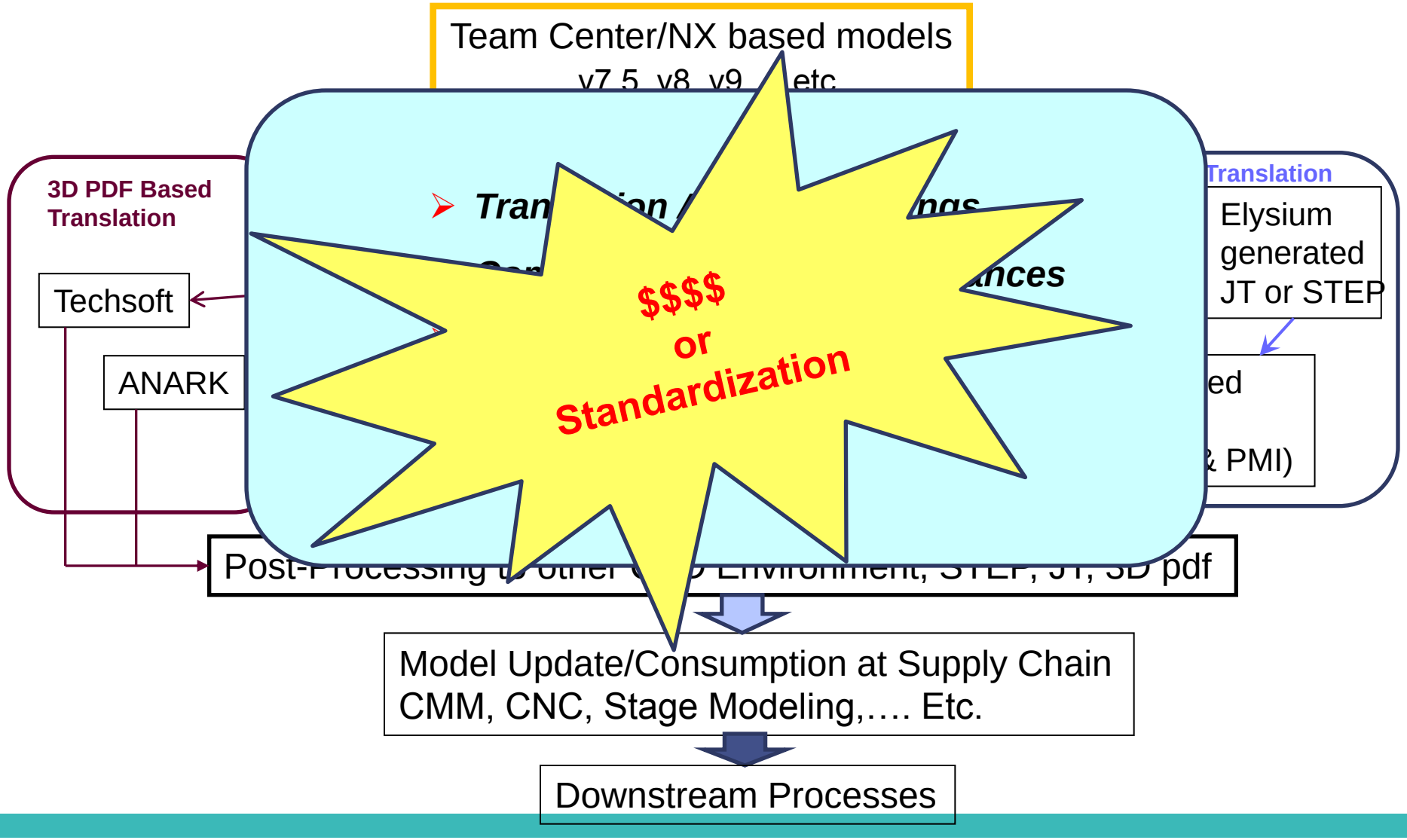

Lightweight or Visual Based Neutral Format

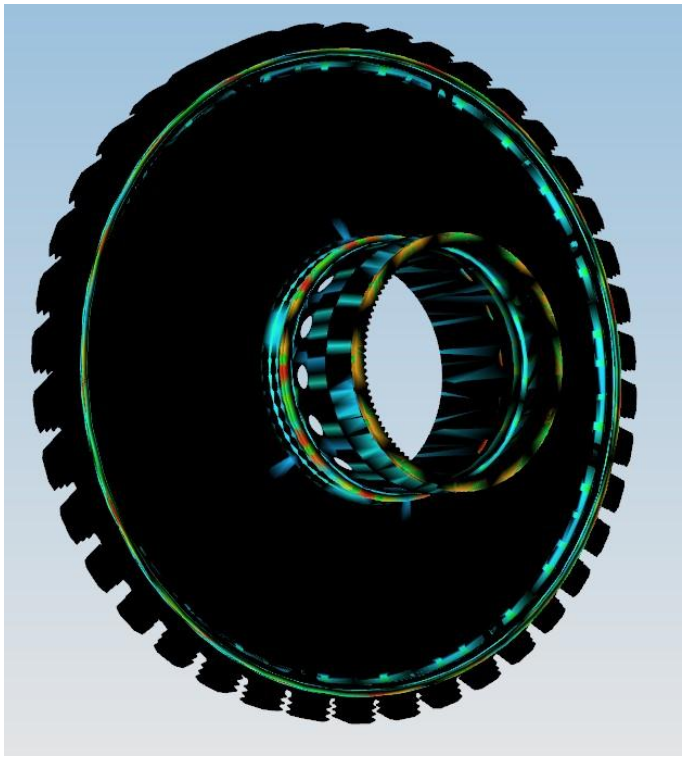

Some neutral format readers strictly use the tessellated model for this view for human visibility of change (example above, changes between release A and release B of a model)

Conclusions

Model Consumptions :

- **Biggest savings will come from machine interpretable PMI associated to model geometry based MBD. Not yet commonly understood or adopted by the supply base.**
- **Very wide variations on how suppliers consume the MBD from TDP- human interpretation, 2D vs 3D, software, process types, generation of stage models, machine capabilities, etc.**
- **Derivative formats (STEP, IGES, JT & PDF) are widely used by supply chain SMEs due to lack of major CAD systems in-house.**
- **For protecting the proprietary features in model, model simplification capability is commonly available in 3rd party software tools and are intuitive for applications.**
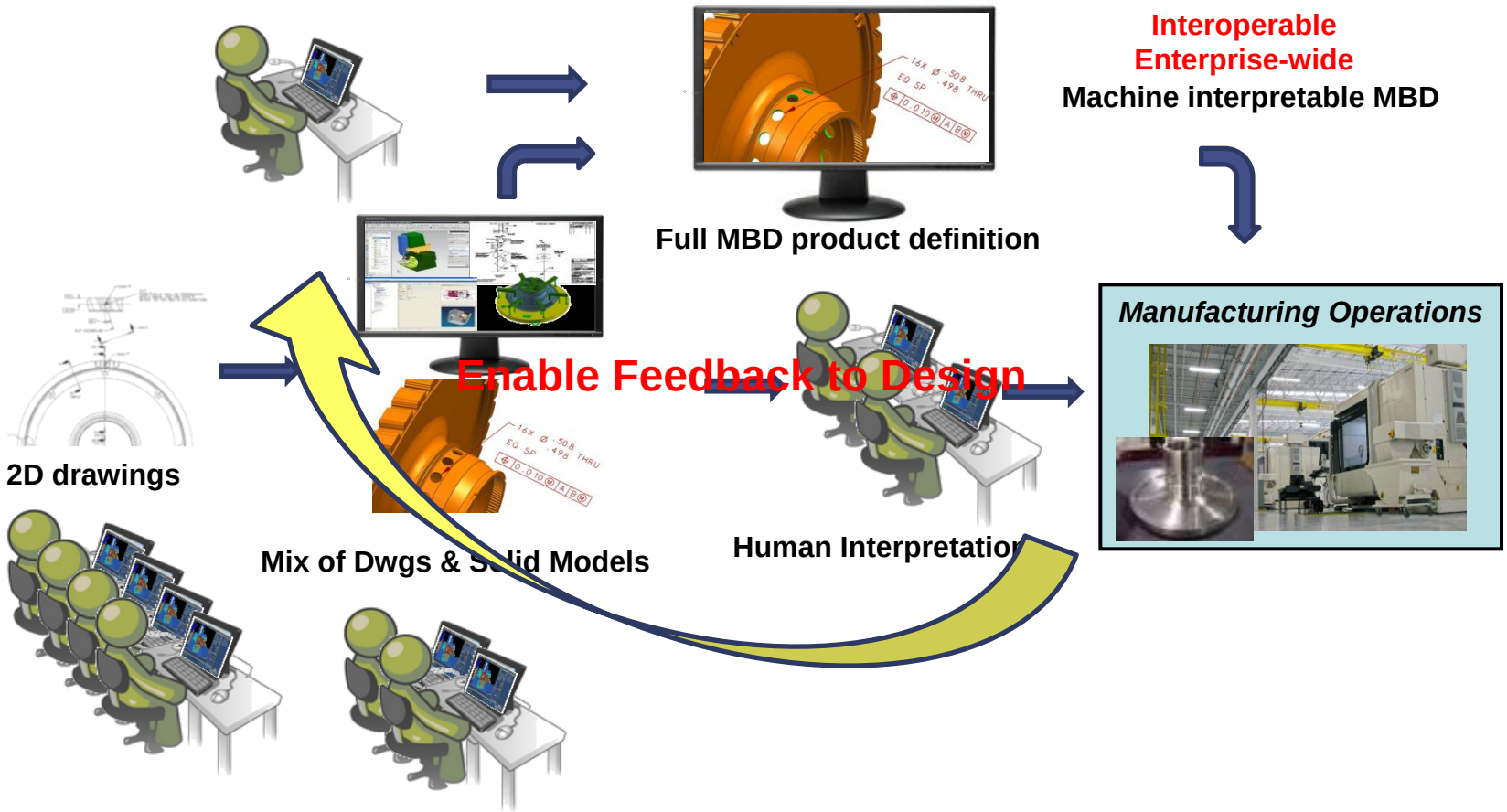
Traditional vs Semantic PMI Based Modeling