3D Technical Data Package Validation Demo

Paul Huang, ARL
Simon Frechette, NIST
& Roy Whittenburg, UTRS

Date: 11/01/2011

Agenda

- Project Overview
- The Demo
  - Model Creation
  - PLM Check In
  - Derivative Creation
- Conclusions
  - Questions?

Project Overview

- Project Overview
- Demo:
  - Model Creation
  - PLM Check In
  - Derivative Creation
- Conclusions

The Project

- Objective: To provide a process to Verify and Validate that the Data Quality of the 3D TDP is sufficient for manufacture
- The Team: A multi service and industry set of subject matter experts
  - Government:
    - Army
    - Navy
    - NIST
    - DLA
  - Industry:
    - ITI TranscenData
    - Elysium
    - PTC
    - BAE Systems
    - Boeing
    - Jotney
    - Vistagy
    - Anark
    - I-Cubed
    - Tetra4D

The Need

- Since the DoD is inherently 2D and drawing based there is no method of verifying the quality of the 3D data they receive
- As a result the prevailing view is that the data is not reliable for use by in the non design portions of the lifecycle
- When used it is often translated into a new format possible introducing more errors
- All of this has fostered an inherent distrust of the data that could be reused in the lifecycle thus driving up cost and time to mission

Without Verification & Validation there is no trust

The Enterprise Driver

Both apps add to the TDP

Translation occurs & delivery is typically in the form of CDs or "flat file"

For spares & sustainment the TDP must be CAD Agnostic

Potential Data Loss & Increased Cost

CAD "A"
PLM "A"
Prime "A"

Mutual Lack of Trust in the Data Quality

CAD "B"
PLM "B"
Prime "B"

DoD

PLM "X"
PLM "Y"
CAD X
ERP "X"
ERP "Y"
MES "Y"
MES "Y"

Supply Chain & Sustainment

Potential Data Loss & Increased Cost

Internal customers use a large number of disparate apps

Mutual Lack of Trust in the Data Quality

The Approach

The team have taken a process approach that focuses on defining what needs to be validated and then works with industry to fill any technology gaps.

Two examples are the Validation Guidebook and the verification of derivative models

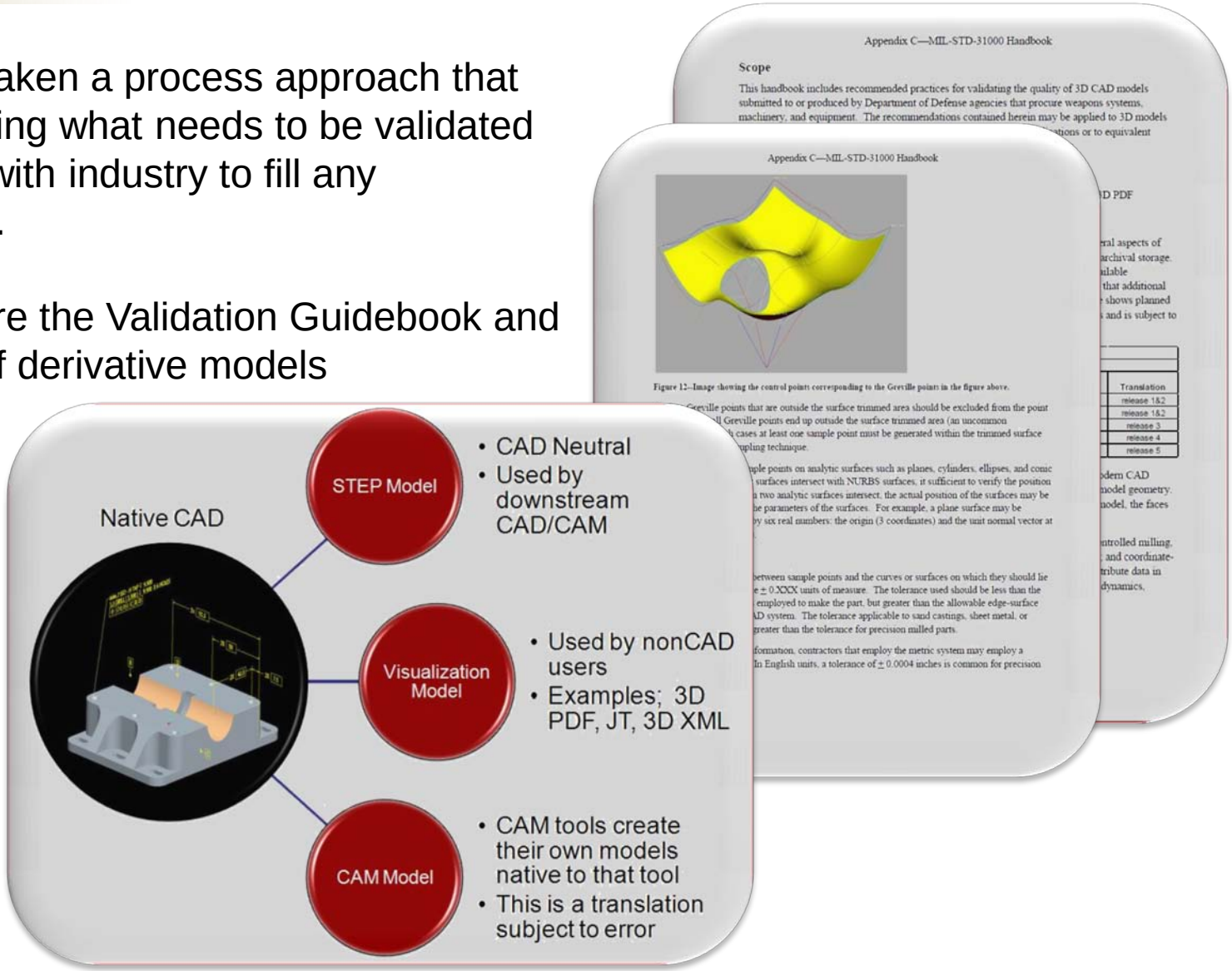

Demo

Project Overview

Demo:

- Model Creation
- PLM Check In
- Derivative Creation

Conclusions

Demo Framework

- What follows is a demonstration of how validation tools could be inserted into the typical Model Process
- It centers on three typical milestones
- We will follow a data set through this process

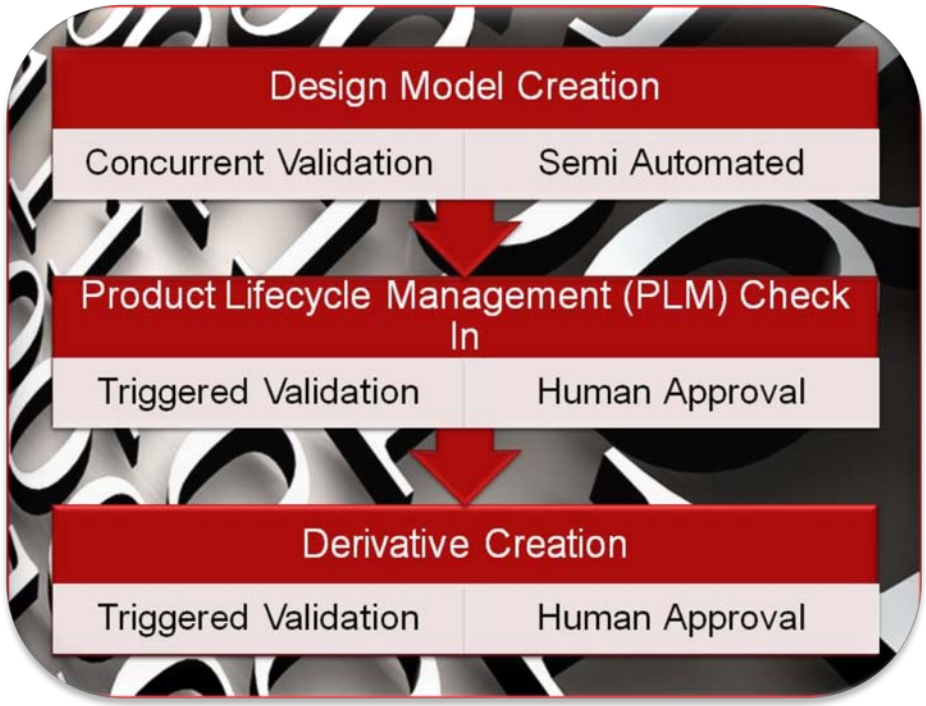

Model Creation

- Project Overview
- Demo:
  - Model Creation
  - PLM Check In
  - Derivative Creation
- Conclusions

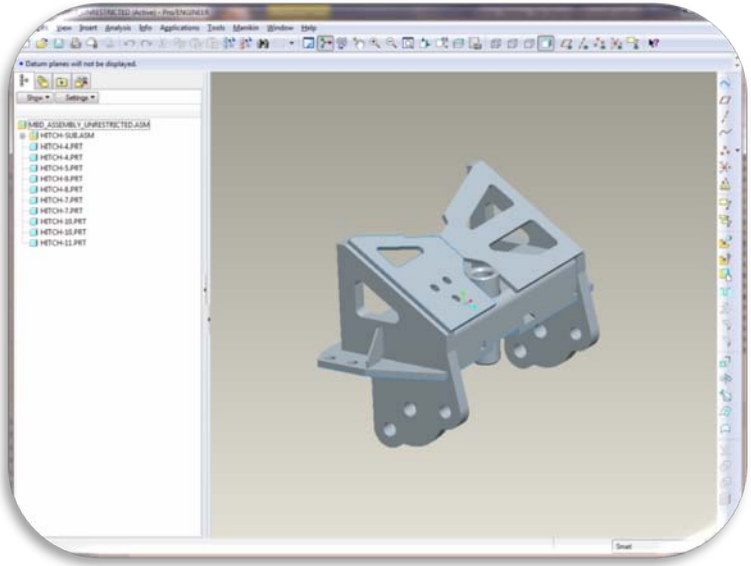

The Milestone

- As the name states the Model Creation milestone covers the act of building the model
- This is further broken down into segments, each of which has its own validation point
- These checks can and should be done multiple times or interactively before a step is completed in order to catch the problem when it is the easiest to fix, early…

Early Error Detection = Reduced Time & Cost

Typical Modeling Process

Primary Feature Creation	
Initial Geometric Checks	Integrated Tool

Secondary Feature Creation	
Initial Geometric Checks	Integrated Tool

Tertiary Feature Creation	
Initial Geometric Checks	Integrated Tool

Initial Cleanup	
Full Geometric Checks	Integrated Tool

Documentation	
Format Checks	Manual & Integrated Tool

Final Modeler Review	
Full Checks	Manual & Offline Tool

Interactive Quality Reporting

- Results Example
  - – Errors
  - – Warnings
  - – Information
  - – Pass
- Most errors can be identified early and fixed on the fly
- Process:

  > Identify > Evaluate >Display & Resolve

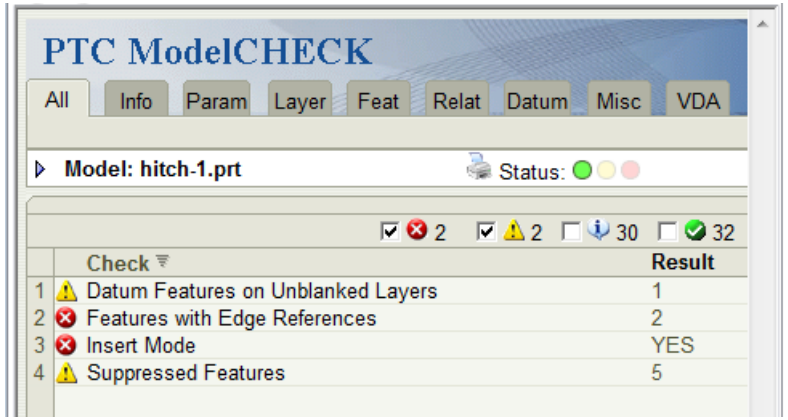

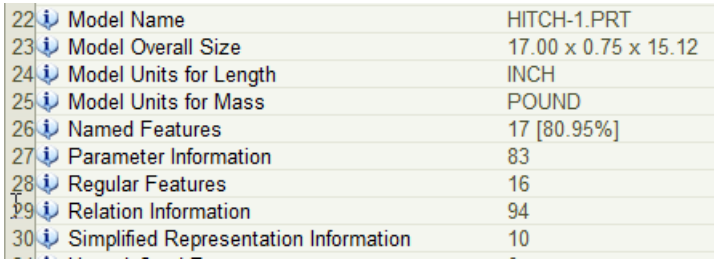

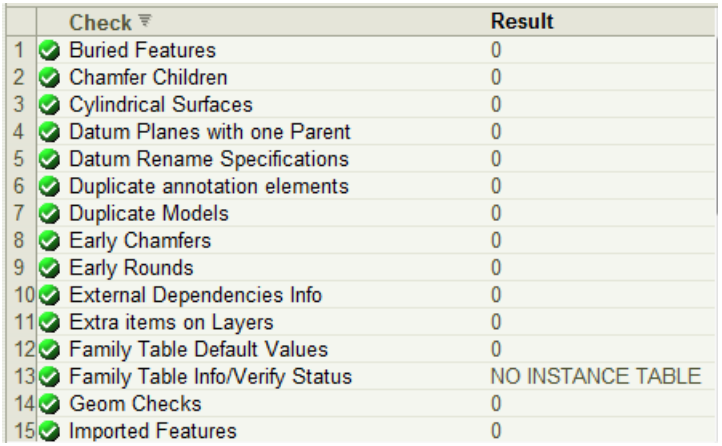

Images provided by PTC

Enforcement of Organizational Rules

- Besides Geometry and Design checks, organizational or schema rules can be enforced
- Example: Datum Features should be Blanked on Layers
  - Identified by feature number
  - Moved to layer to remove warning

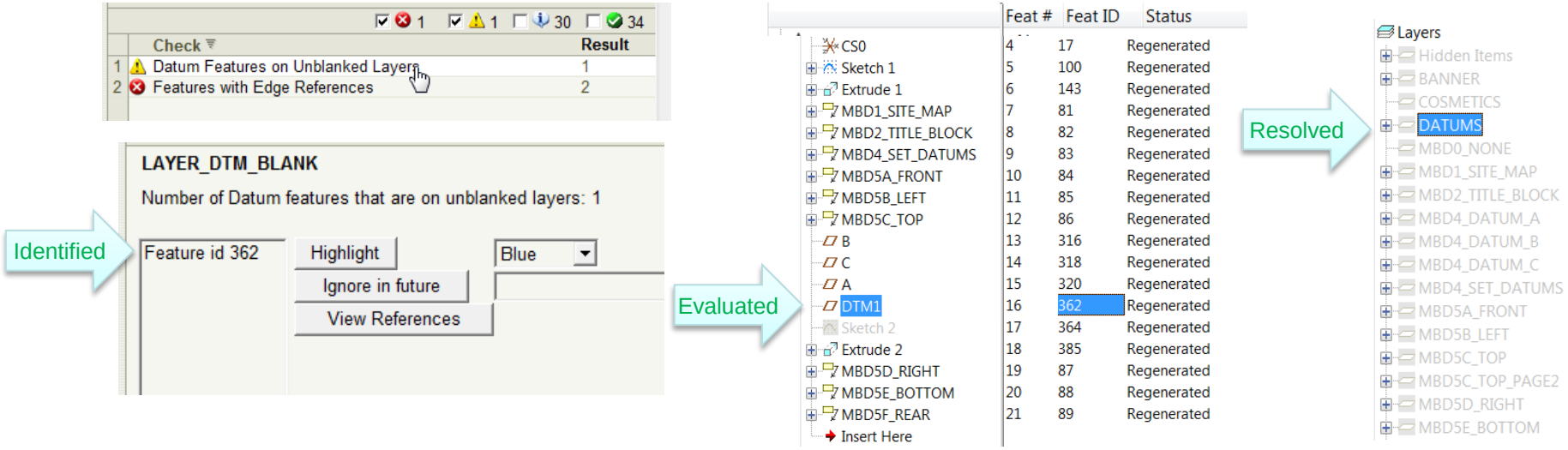

Images provided by PTC

Reuse Quality Checks

- Issues that can effect the reuse of the model are also checked
- Feature with Edge References. issue for child geometric features

Imbedded web page item list

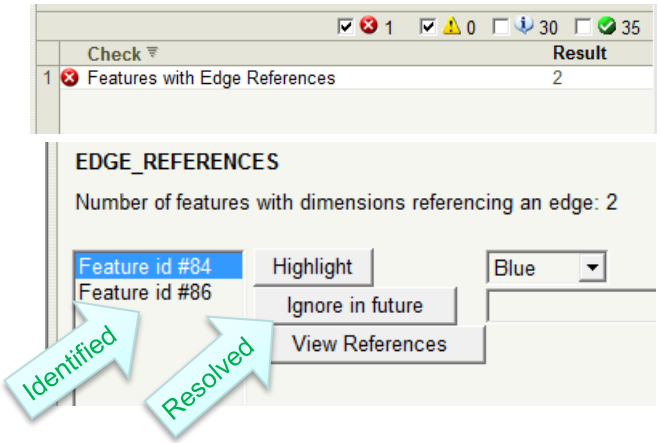

Shown in model tree

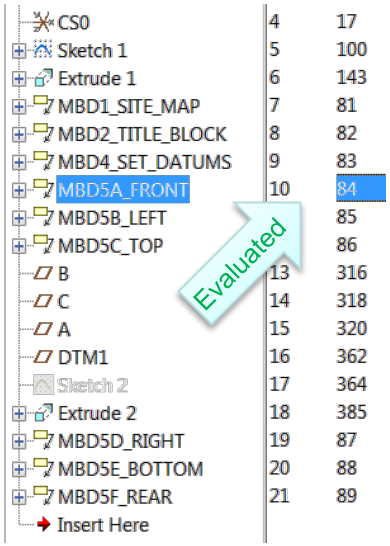

Displayed in graphics window

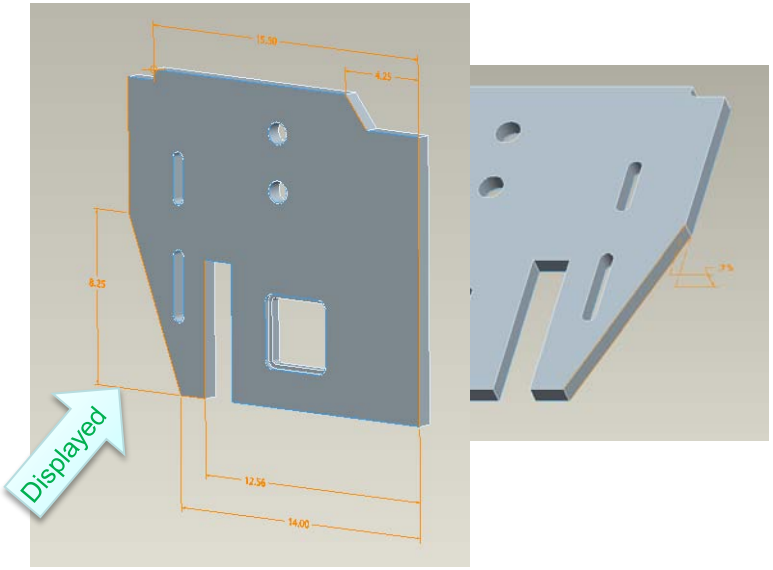

Images provided by PTC

Assemblies Can Be Checked Too

- Example: Directs designer to run interference check
  - Software finds 5 interferences with volumes
  - Interfering parts are outlined in yellow & green
  - Overlapping volume region displays in red

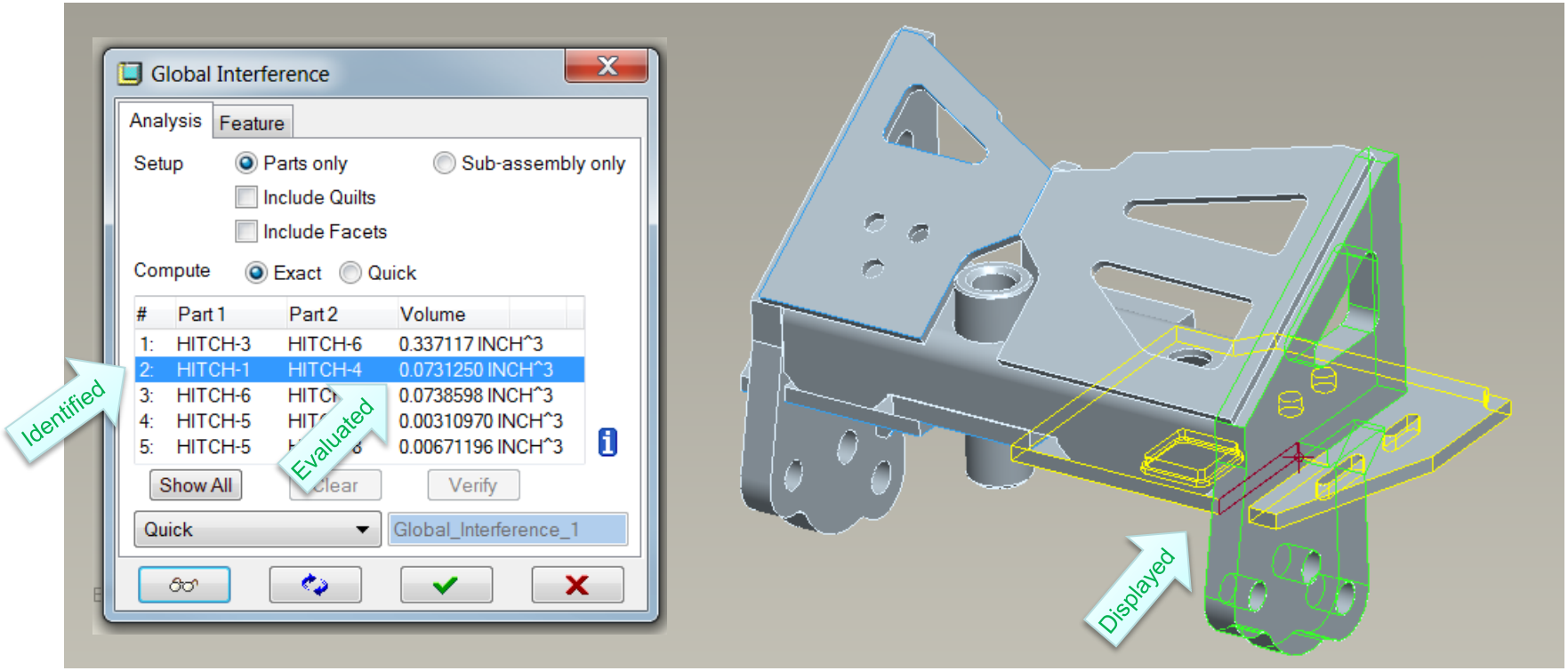

Images provided by PTC

PLM Check In

- Project Overview
- Demo:
  - Model Creation
  - PLM Check In
  - Derivative Creation
- Conclusions

The Milestone

- Once a model has been created it is typically placed or “checked in” to a Product Lifecycle Management (PLM) tool
- At this point a series of checks are run verifying its quality
- If the model does not pass these checks it is not allowed to enter the repository
- At this point it is ready to be shared with others in either a released or unreleased state

Models Are Scored And Reports Saved

Images provided by Elysium

Category	Errors	Severity
Large segment gap	0	
Non-tangent segments	0	
Non-tangent segments (UV)	0	
Tiny curve or segment (curve)	0	
Tiny Curve or segment (segment)	0	
Self-intersecting curve	0	
Large patch gap	0	
Non-tangent patches	0	
Narrow surface or patch (surface)	0	
Narrow surface or patch (patch)	0	
Degenerate surface corner	0	
Self-intersecting surface	0	
Degenerate surface boundary (surface)	0	
Degenerate surface boundary (patch)	0	
Closed edge	0	
Large edge gap	0	
Self-intersecting loop	0	
Inconsistent edge in loop	0	
Large edge face gap	3	Serious
Large vertex gap	0	
Narrow face	0	
Intersecting loops	0	
Closed face	0	
Inconsistent face on surface	0	
Large face gap	2	Serious
Non-tangent faces	3	Serious
Inconsistent face in shell	0	
Free edge	2	Serious
Loop of free edges	1	Serious
Over-used edge	0	

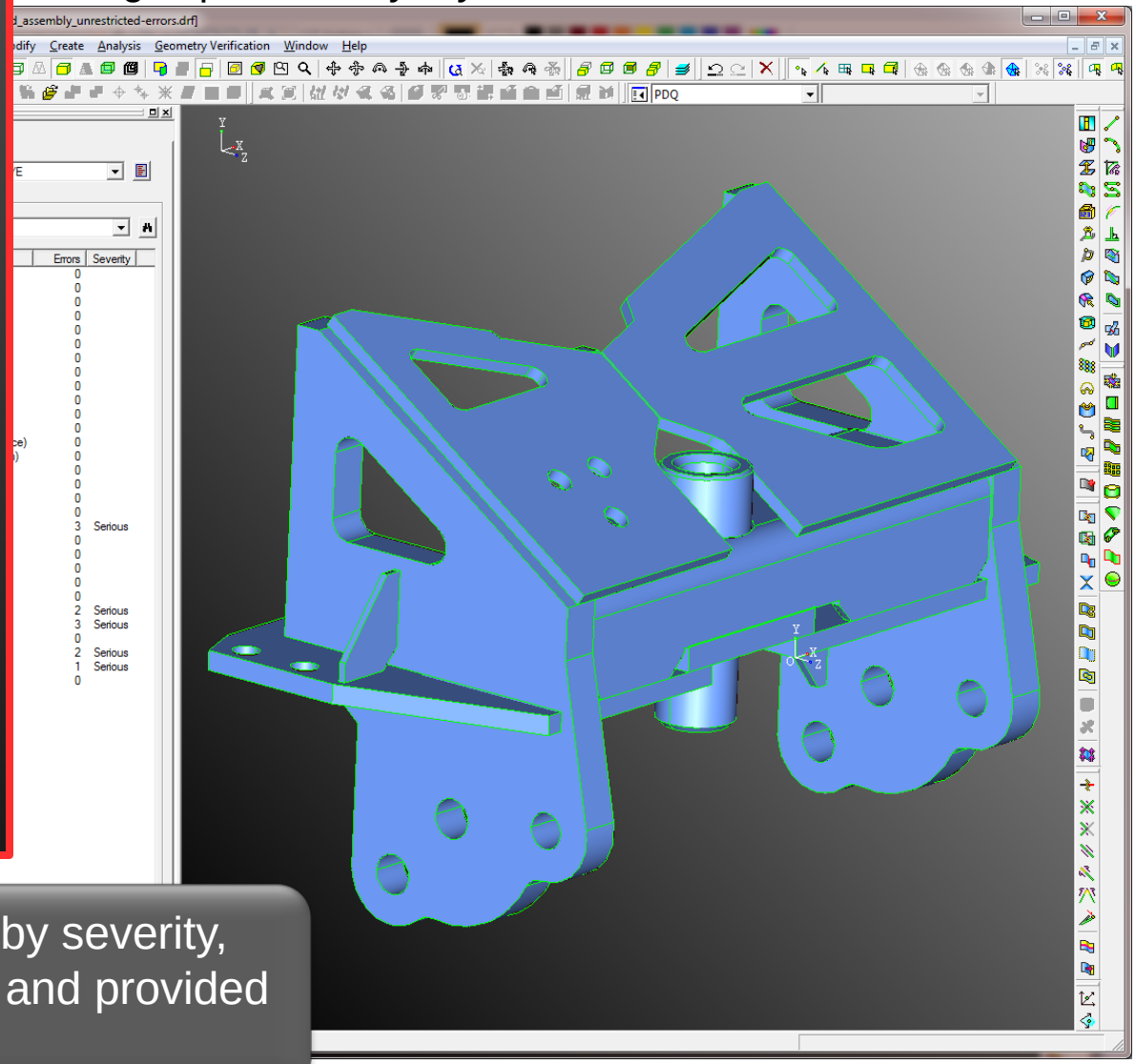

Errors are scored and ranked by severity, the reports can also be saved and provided as proof of validation

Full Data Quality Checks Are Run

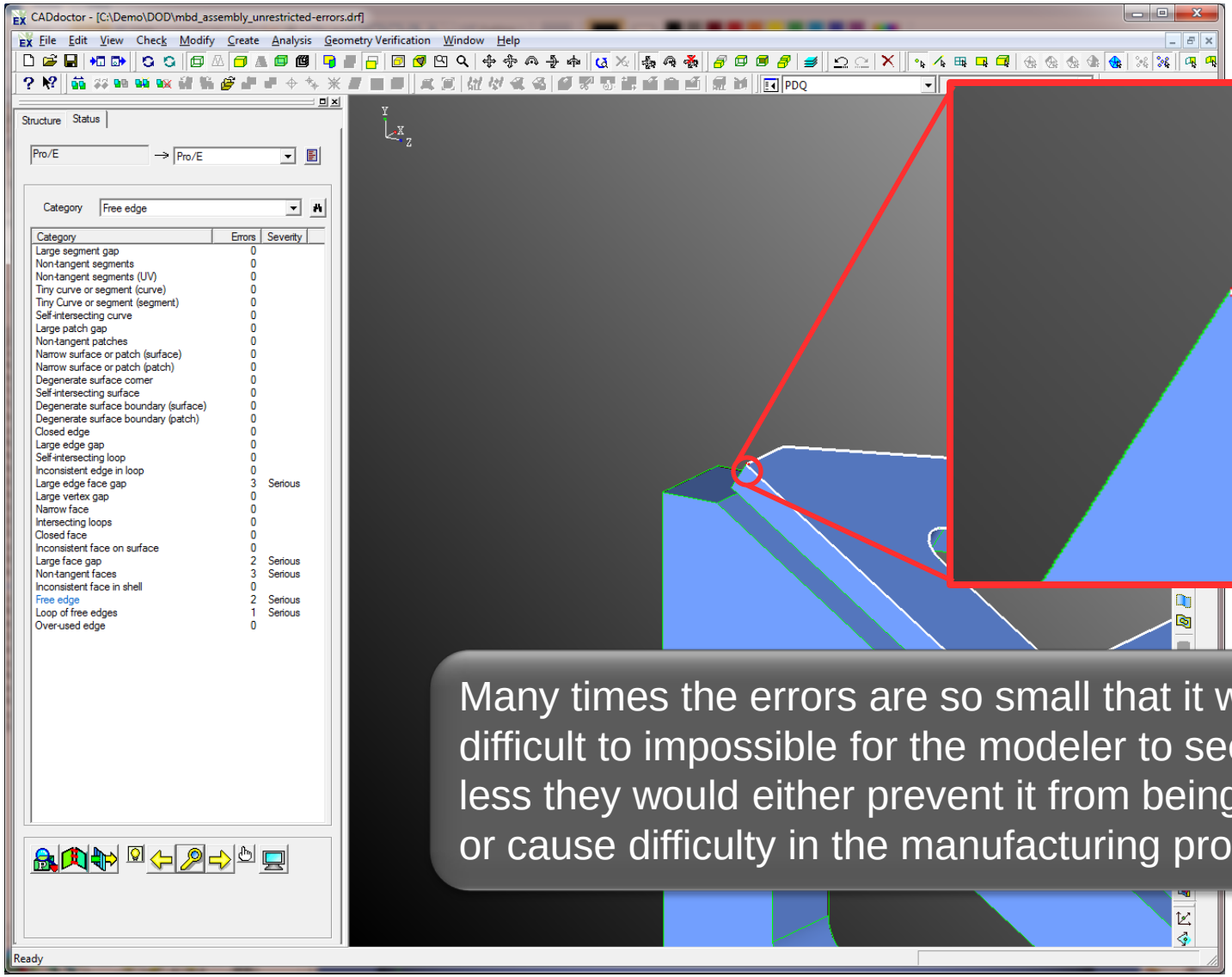

Many times the errors are so small that it would be difficult to impossible for the modeler to see. Never the less they would either prevent it from being translated or cause difficulty in the manufacturing process.

Images provided by Elysium

RDECOM

Derivative Creation

- Project Overview
- Demo:
  - Model Creation
  - PLM Check In
  - Derivative Creation
- Conclusions

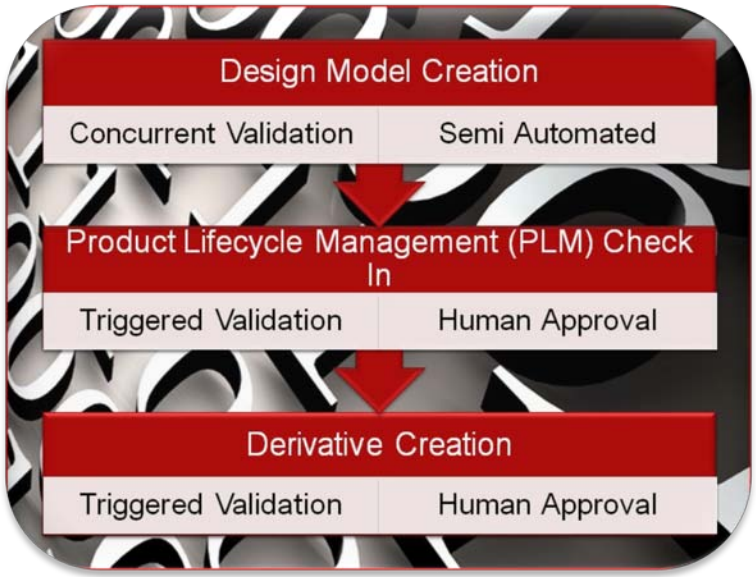

The Milestone

- Once released to downstream customers and often before that, every model will eventually be translated into another format for consumption
- The translated model is called a derivative
- This derivative must be validated just like the original
- But in addition to checking for normal quality errors it must be checked to make sure it does not deviate from the original

Translation Validation Testing

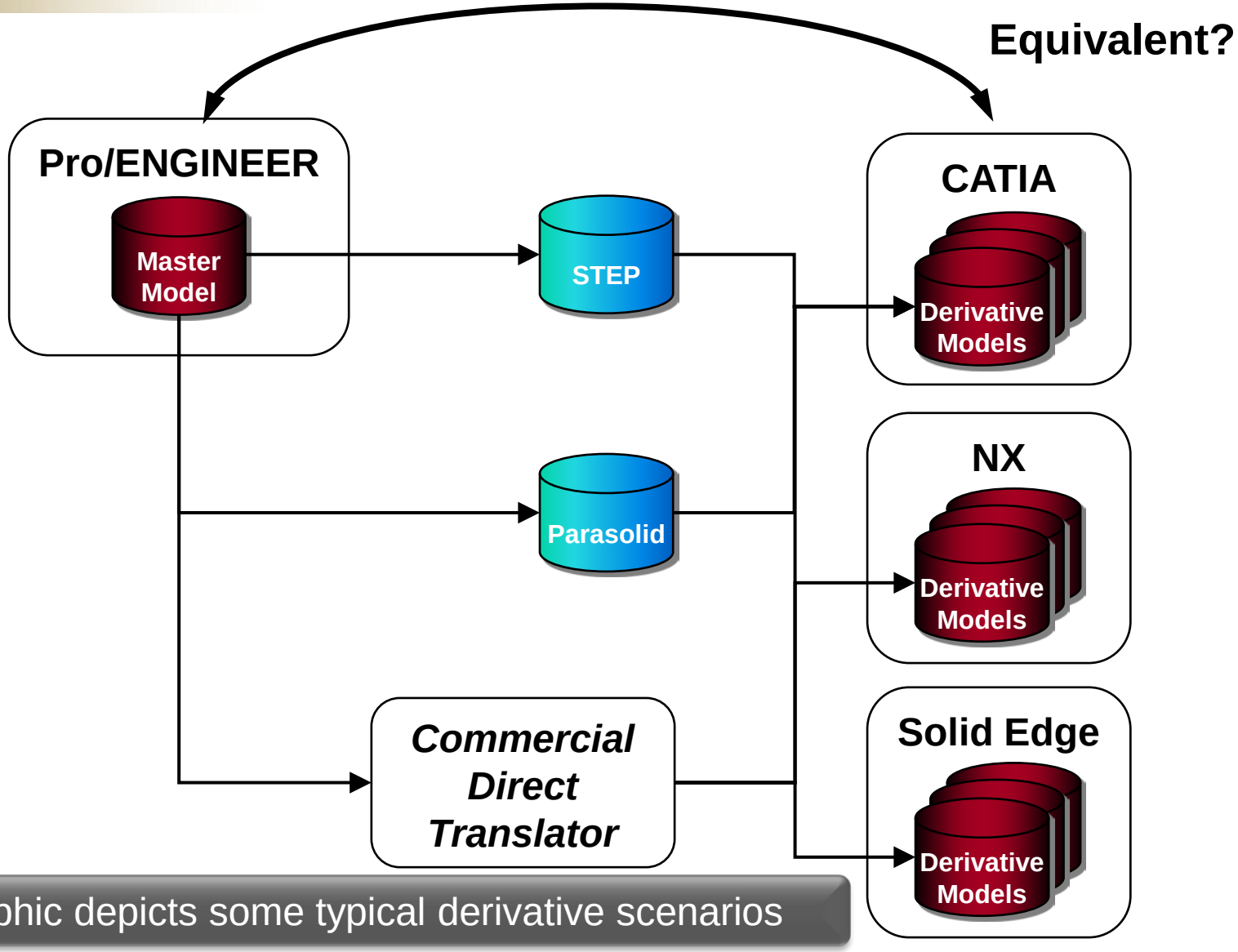

This graphic depicts some typical derivative scenarios

Images provided by ITI TrancenData

Geometry Validation Example

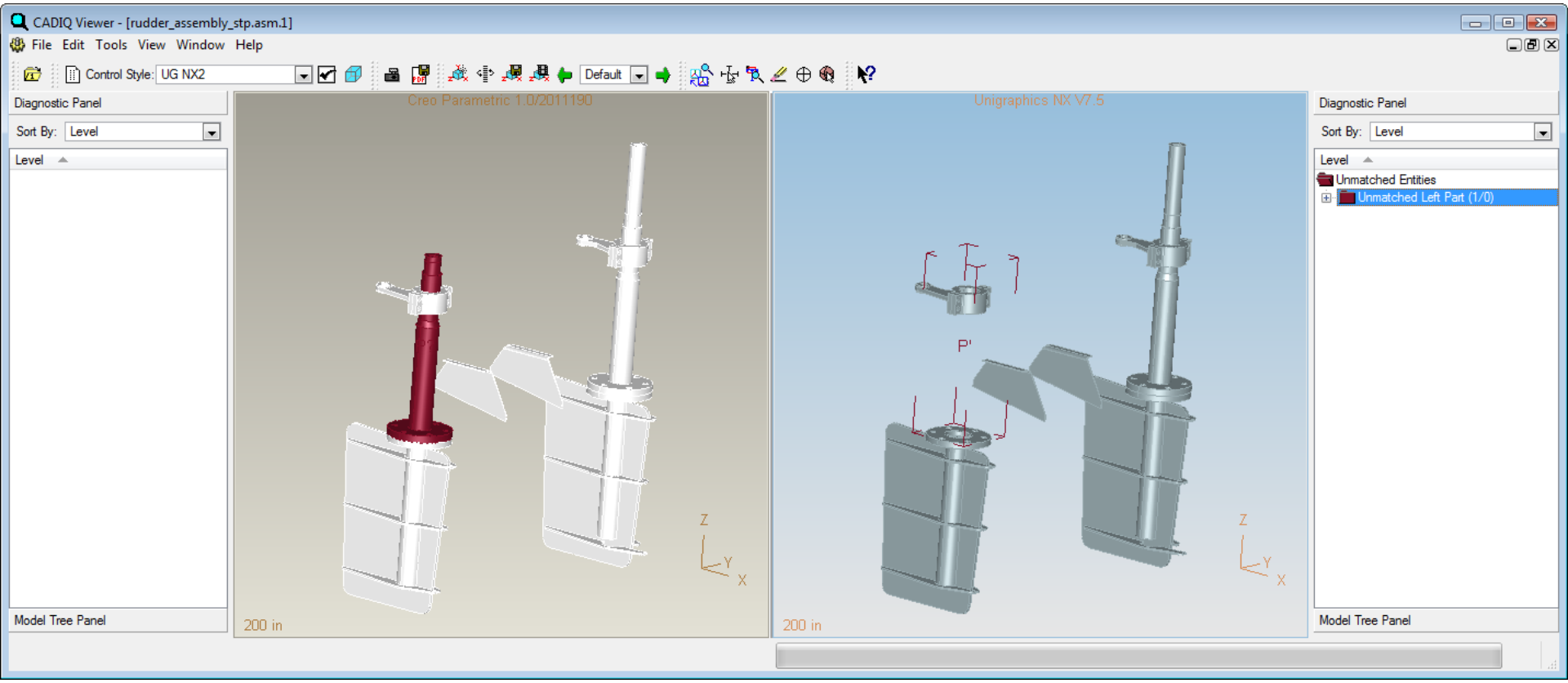

During direct translation from ProE to NX the highlighted part was lost

Images provided by ITI TrancenData

Geometry Validation Example

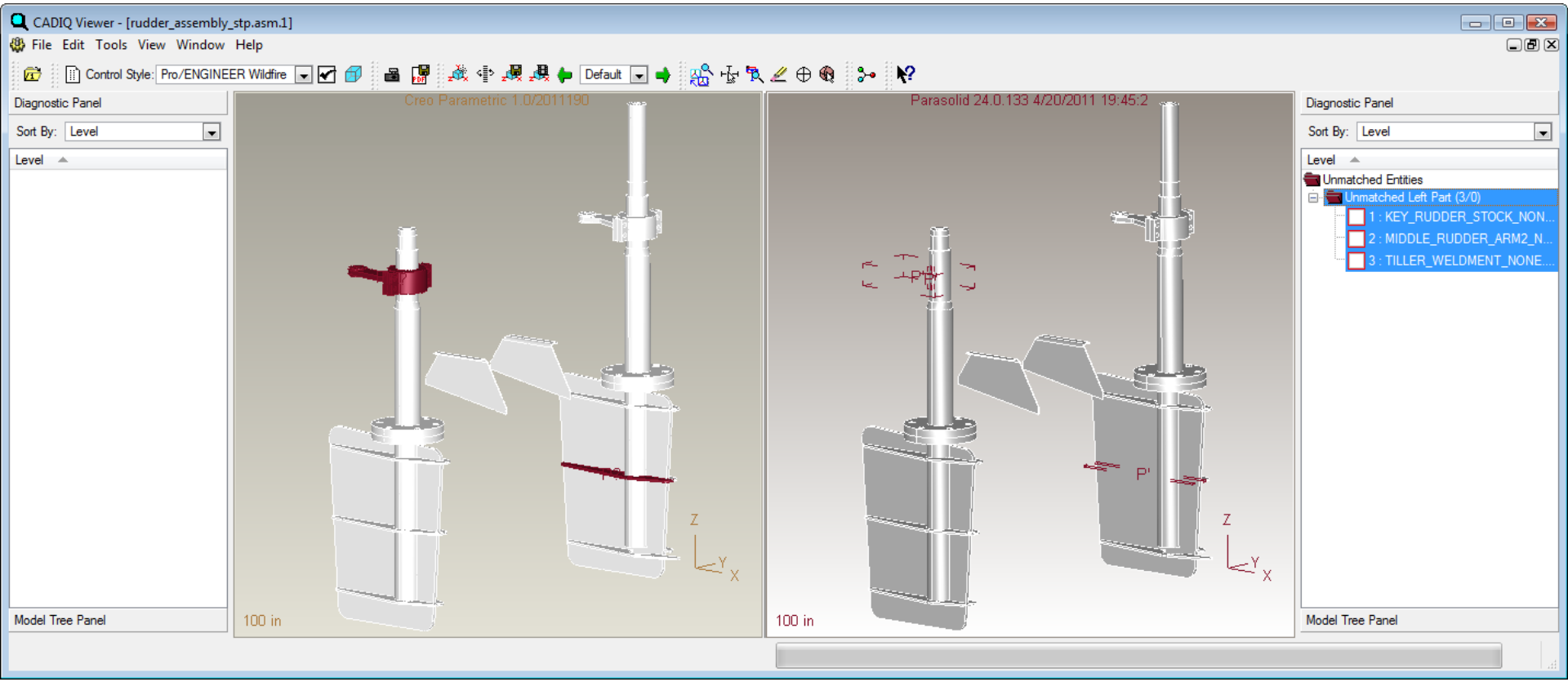

During Parasolid translation from ProE to Solid Edge the highlighted parts were lost

Images provided by ITI TrancenData

PMI Translation Validation Testing

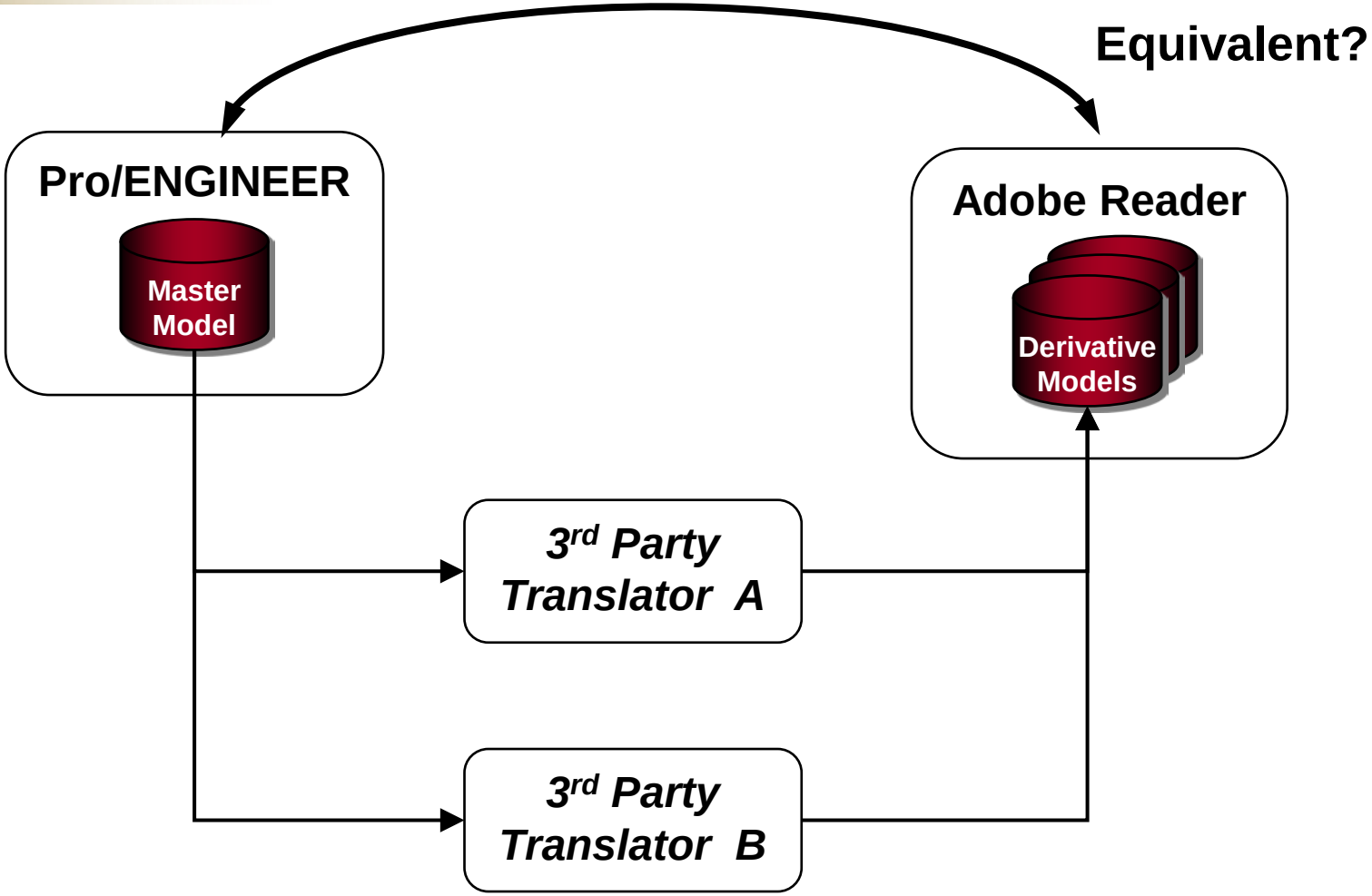

A growing use case is the translation to Adobe 3D PDF. At this point we will also address the Product Manufacturing Information quality

Images provided by ITI TrancenData

Model Attributes Validation Example

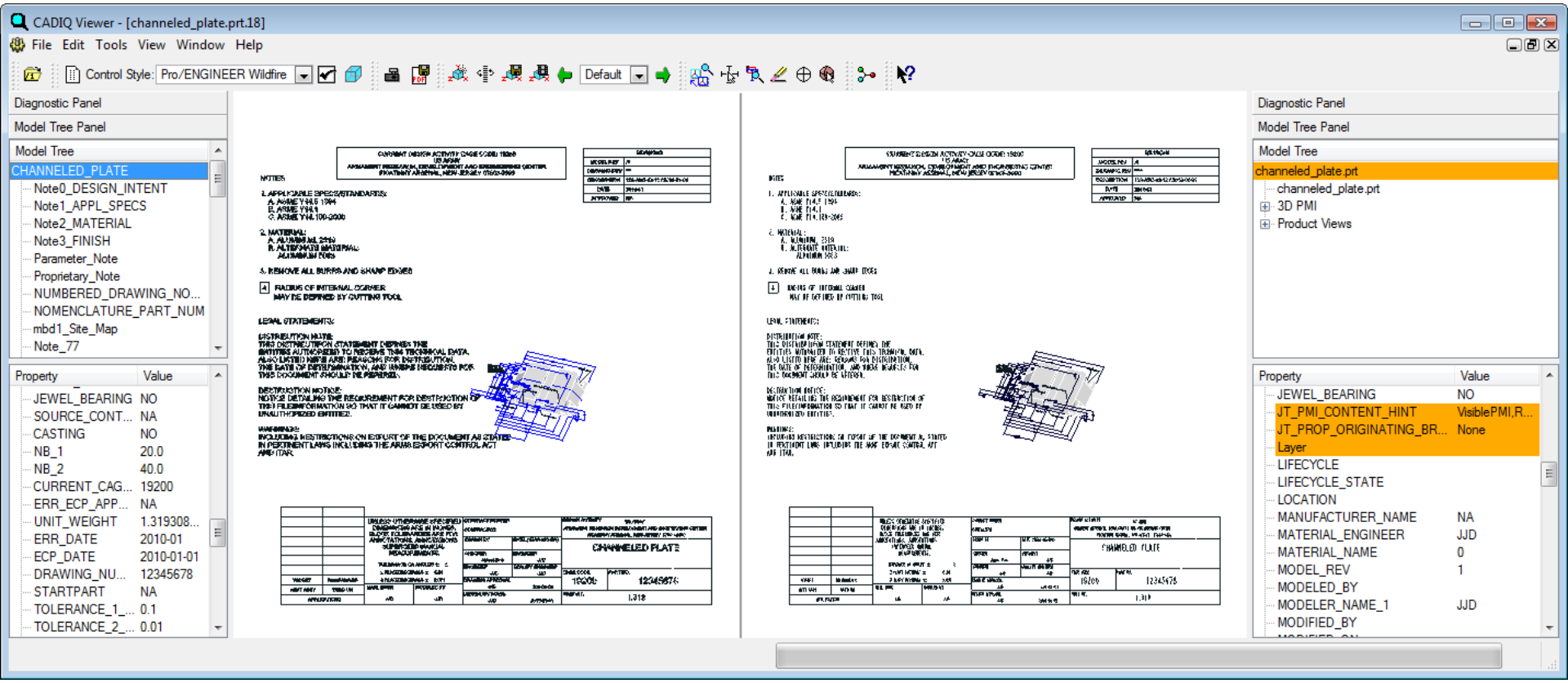

During export from ProE to 3D PDF confusing attributes were added to the model

Images provided by ITI TrancenData

PMI Font Validation Example

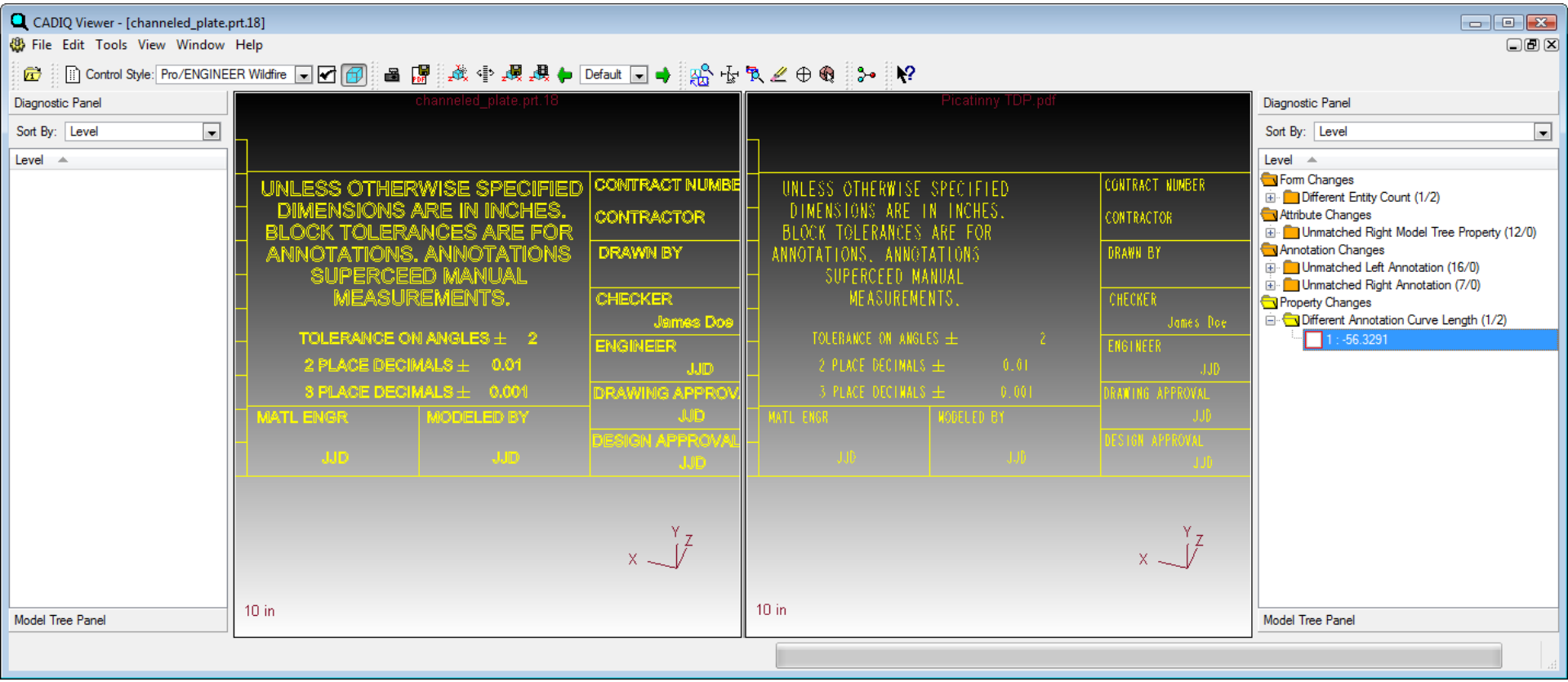

During export from ProE to 3D PDF the text font in this title block changed

Images provided by ITI TrancenData

PMI Combined View Validation

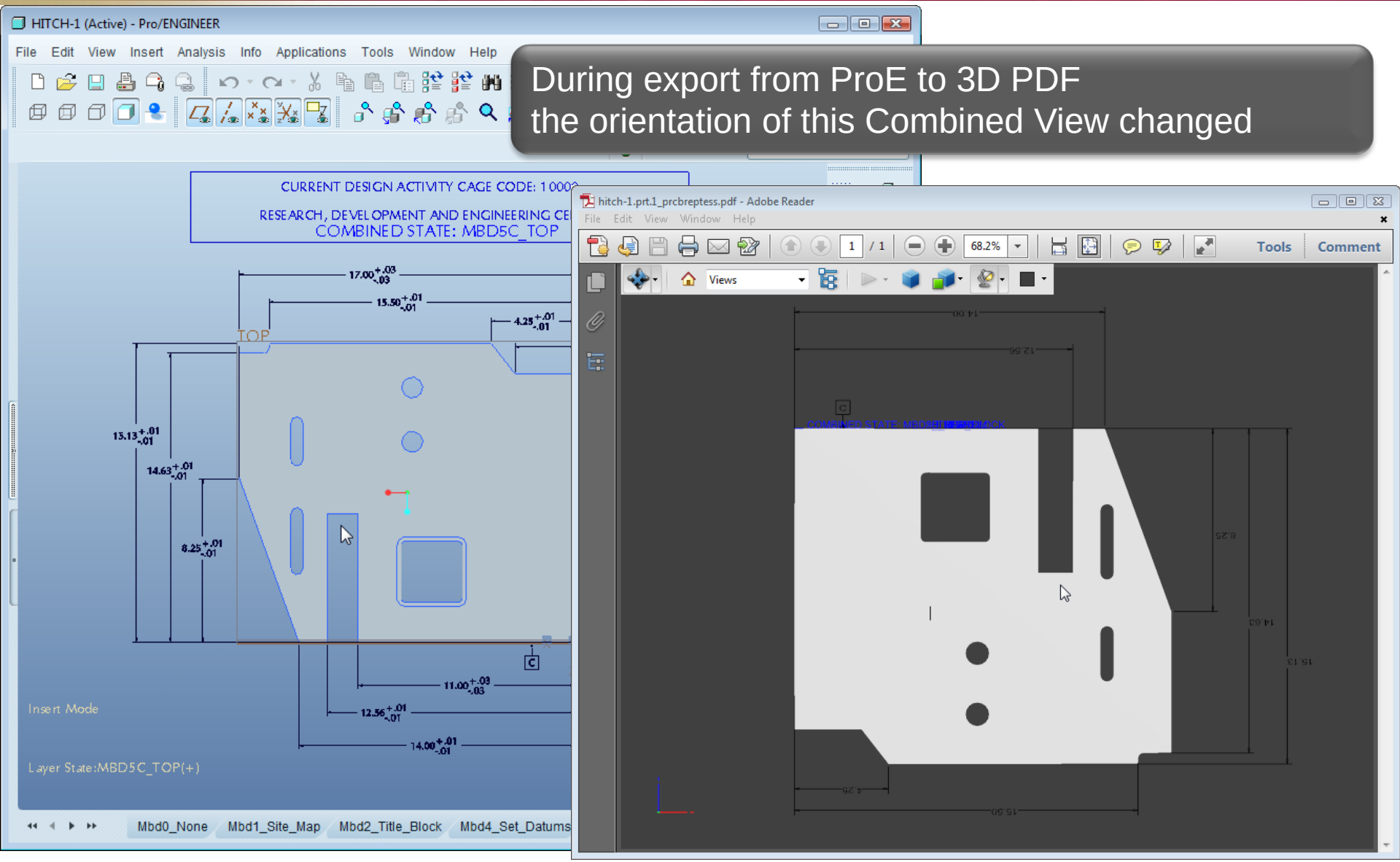

During export from ProE to 3D PDF
the orientation of this Combined View changed

Images provided by ITI TrancenData

PMI Annotation Validation

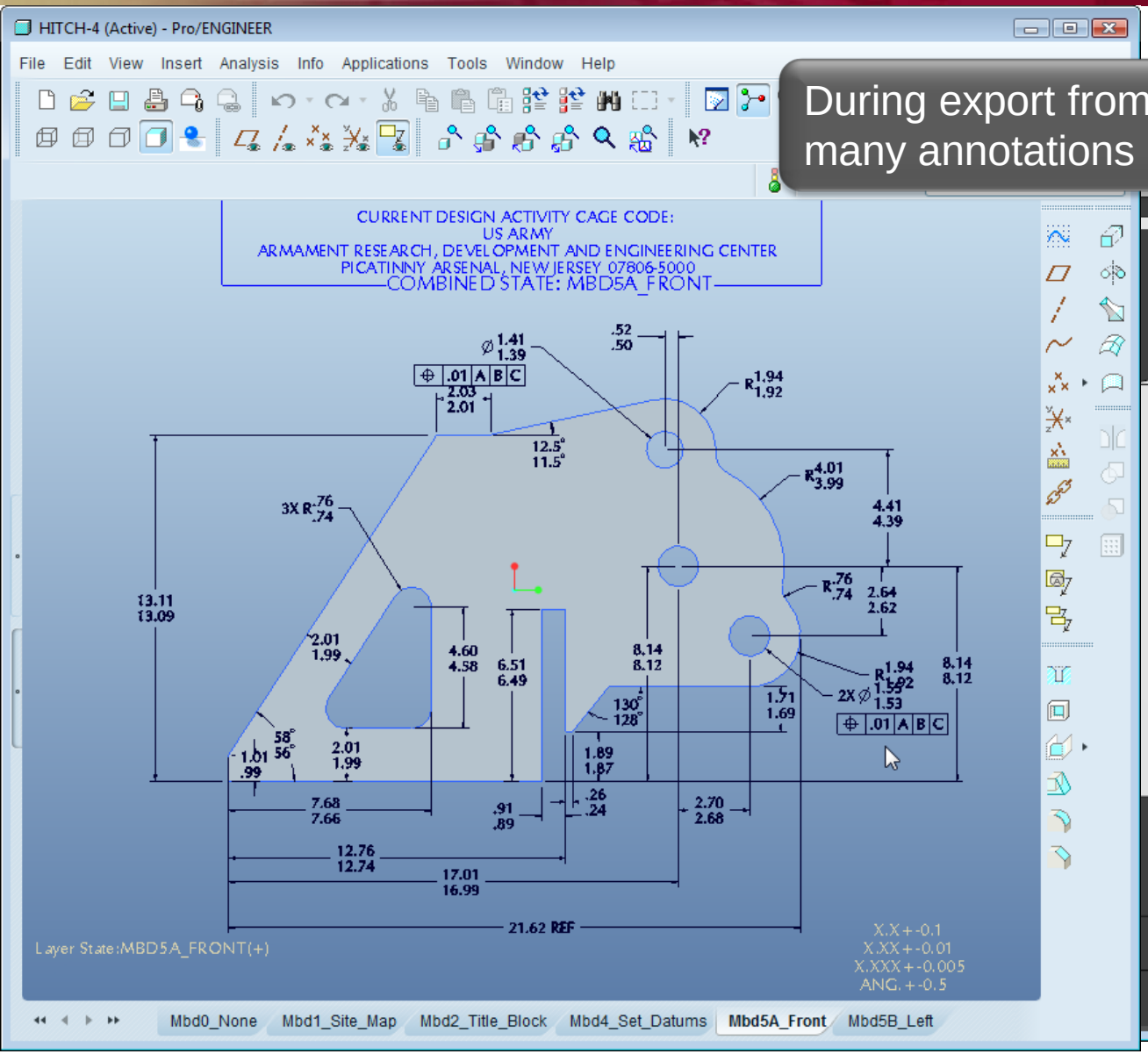

During export from ProE to 3D PDF many annotations in this view were lost

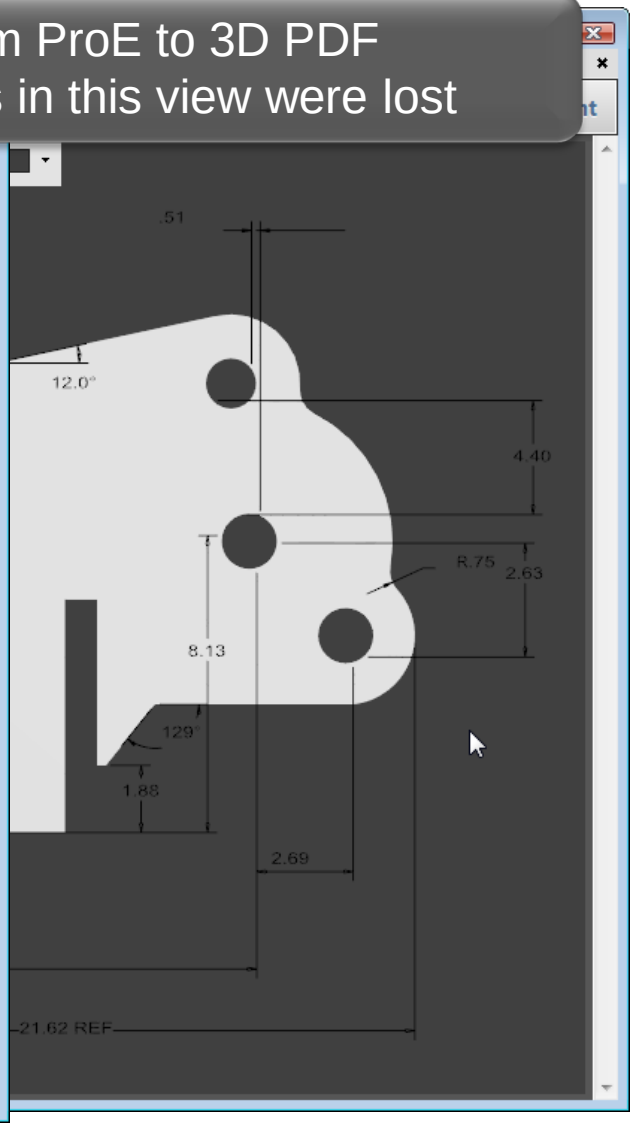

Images provided by ITI TrancenData

PMI Dimension Validation

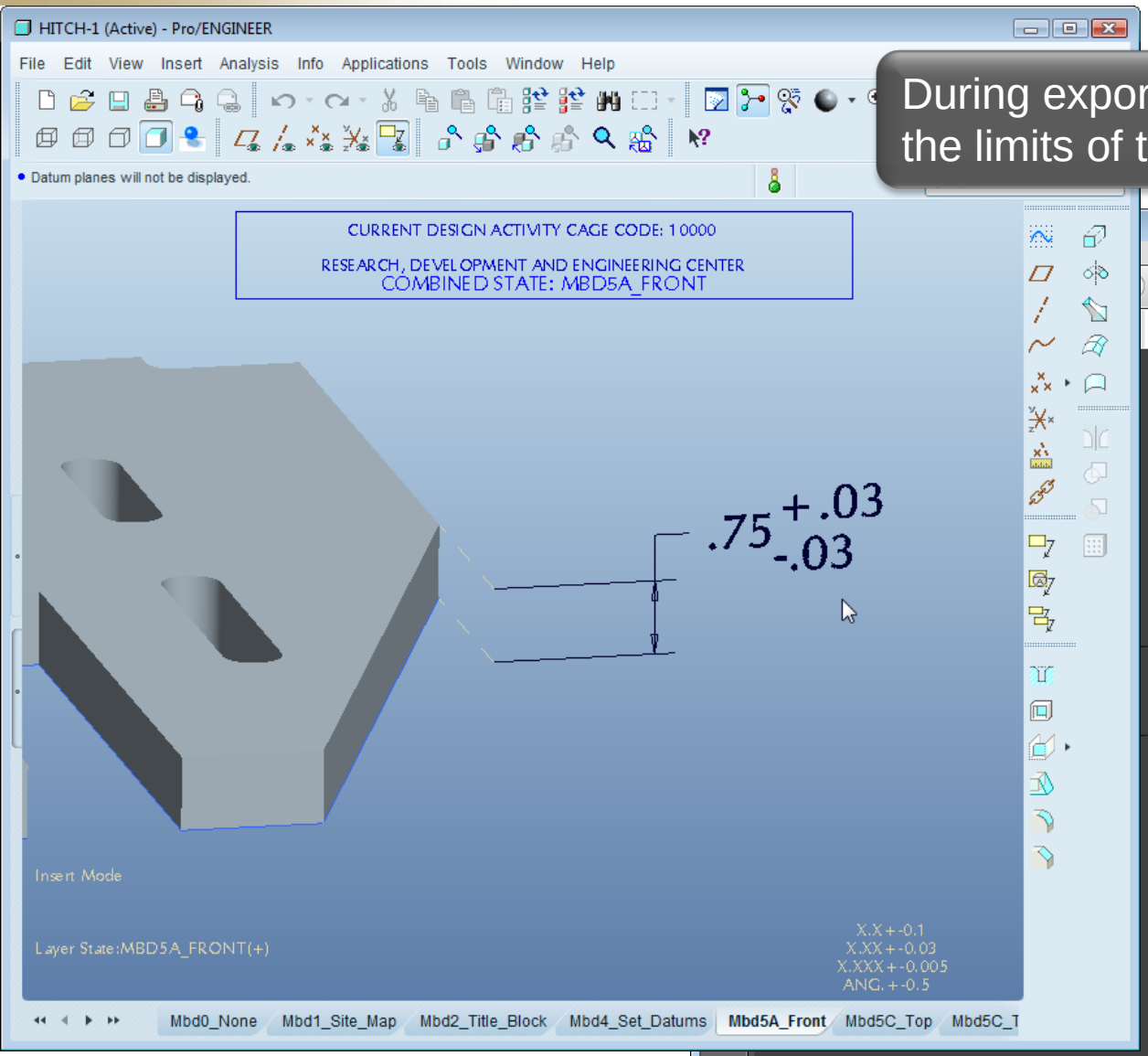

During export from ProE to 3D PDF the limits of this dimension were lost

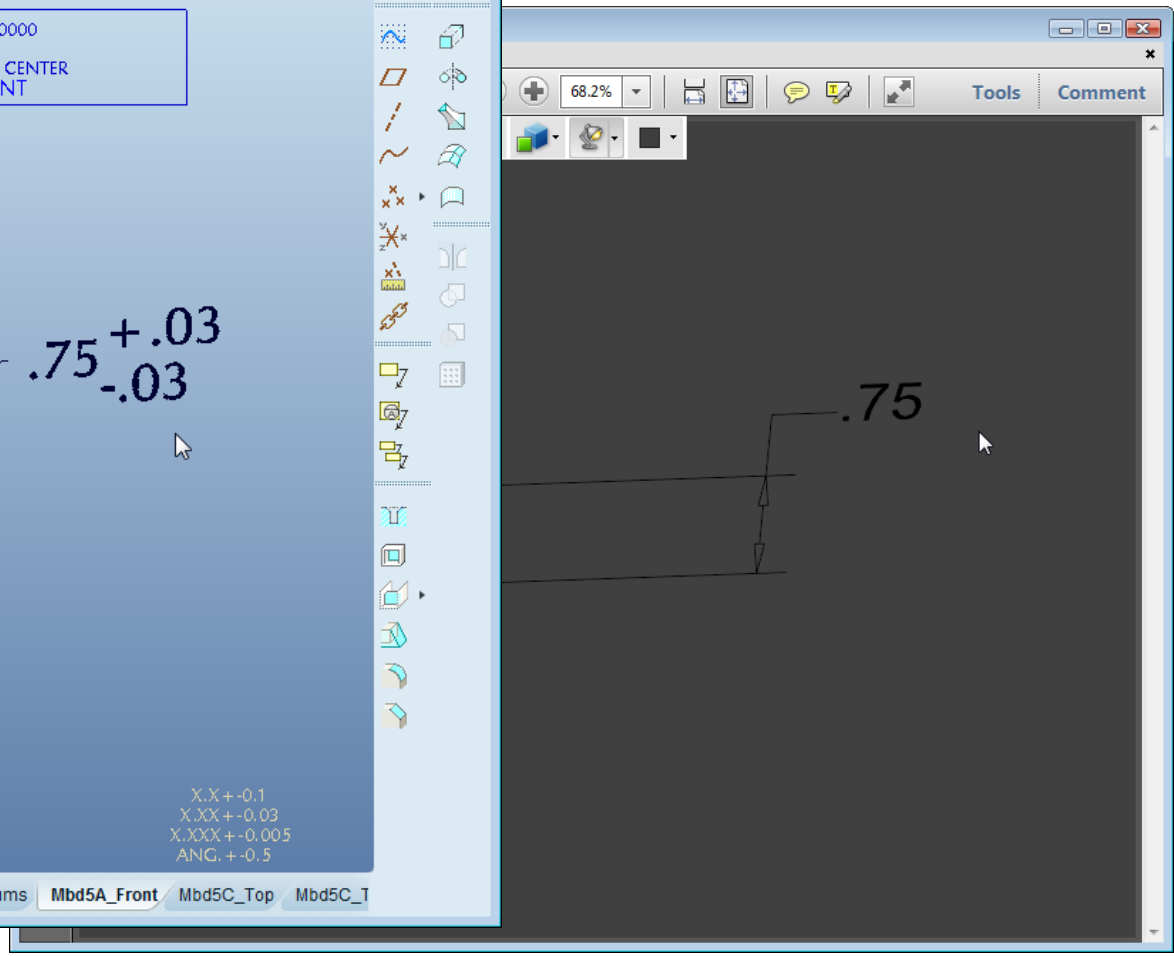

Images provided by ITI TrancenData

PMI Note Placement Validation

During export from ProE to 3D PDF
the placement of these notes was mangled

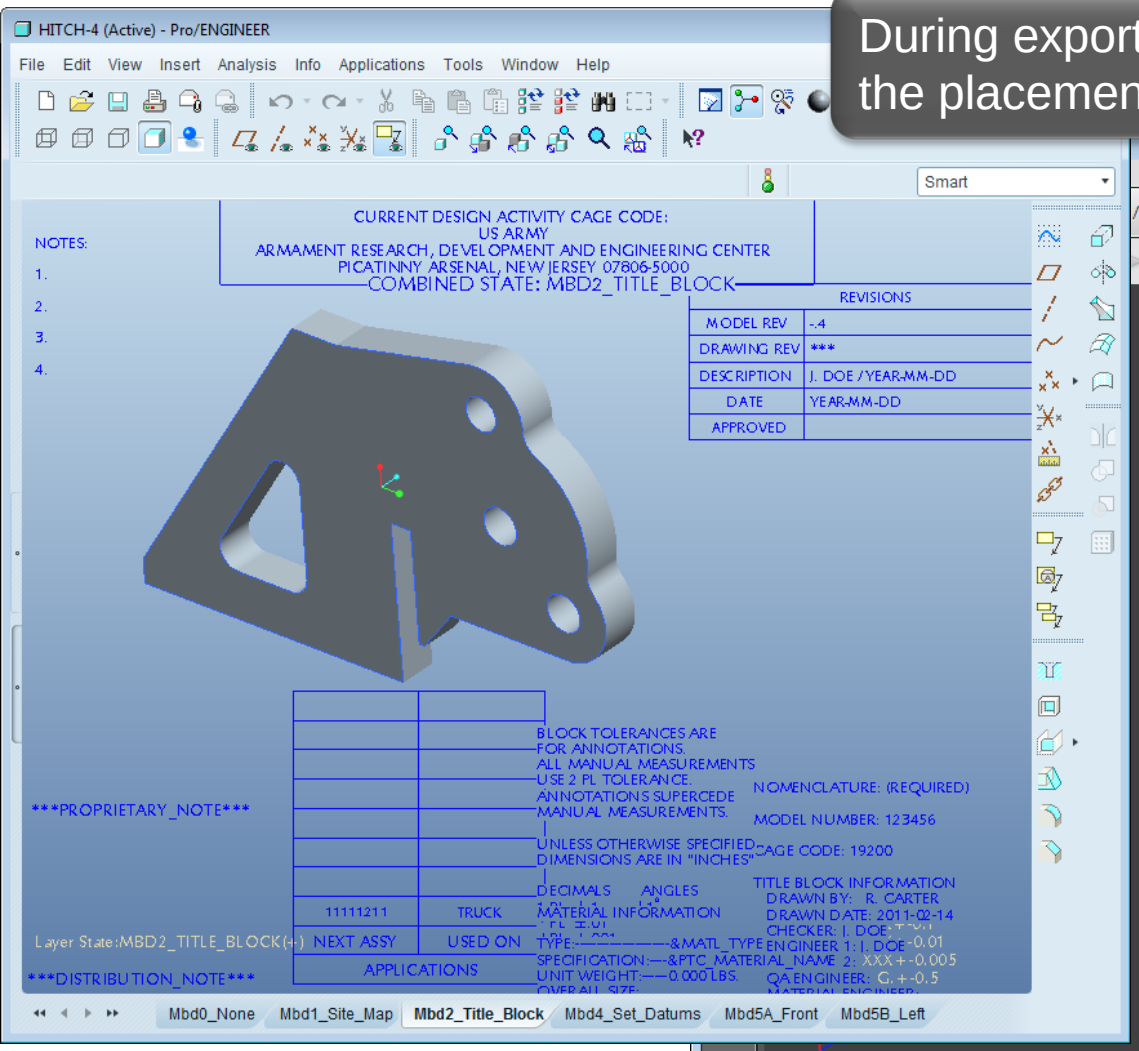

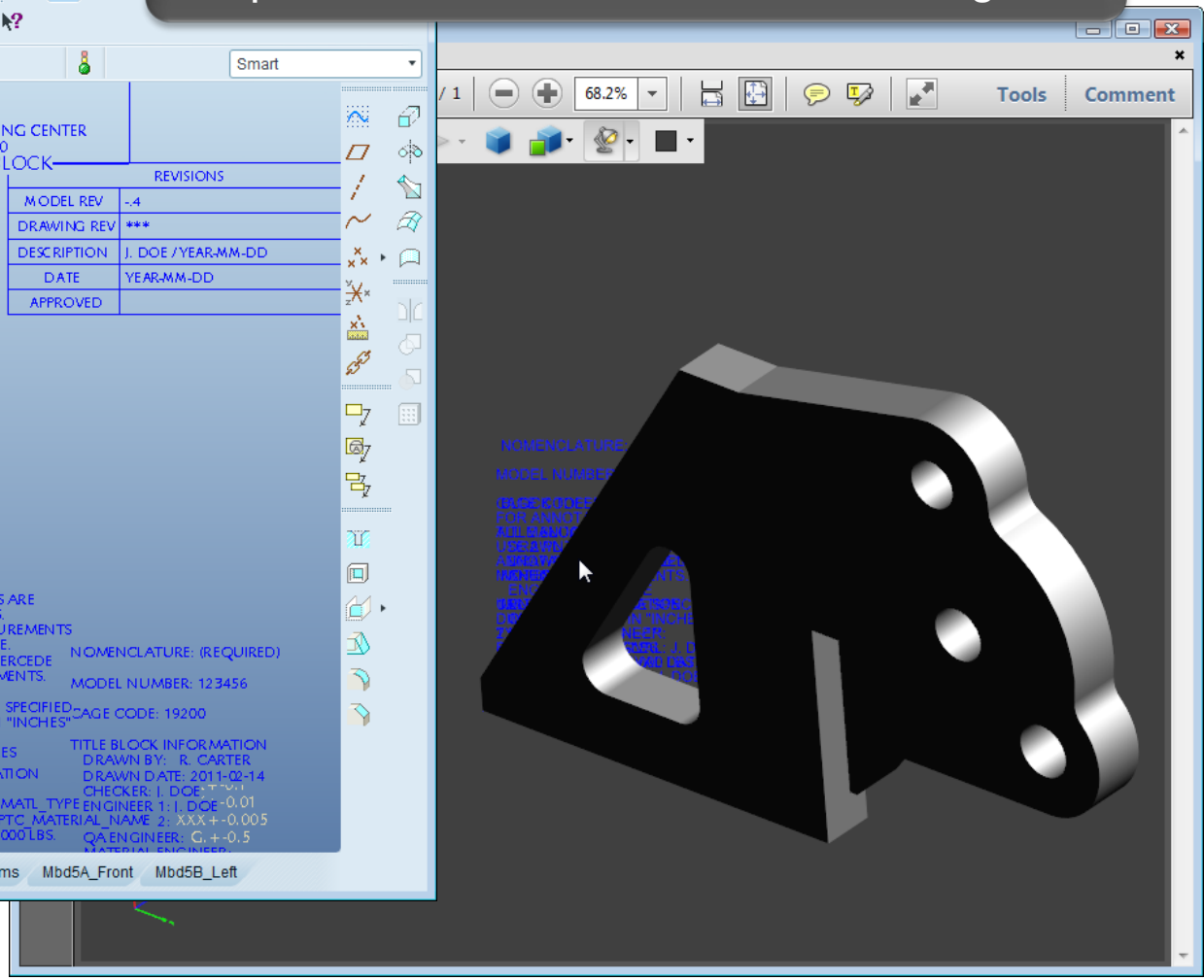

Images provided by ITI TrancenData

RDECOM

Conclusions

- Project Overview
- Demo:
  - Model Creation
  - PLM Check In
  - Derivative Creation
- Conclusions

Wrapping It All Up

- Validation and Verification (V&V) needs to occur at many points in the lifecycle of a model
- Derivative V&V is at least as important as that of the native model
- It is a combination of automation and human in the loop process
- Its end goal is to increase the model data quality and thus increase the trust of consumers of the model

Questions

Thank You