MBD

The Key to **Intelligent** GD&T

MBE-TDP Summit Conference
Gaithersburg MD 2011-12-13

Bill Tandler

A *Smart*GD&T™ Presentation

Copyright © 2011 by Multi Metrics, Inc. Menlo Park, CA All Rights Reserved

MULTI METRICS, INC.

or

Copyright © 2011 by Multi Metrics, Inc. Menlo Park, CA All Rights Reserved

MBD

The Key to **Intelligent** GD&T

and

Intelligent GD&T

The Key to **functional MBD**

Copyright © 2011 by Multi Metrics, Inc. Menlo Park, CA All Rights Reserved

Presentation Overview

1. Objectives
2. MBD and its Promises
3. GD&T and its Promises
4. An Example: “Decorative” versus “Functional” GD&T
5. An Example: “Functional” GD&T and Metrology !
6. Conclusions

Copyright © 2011 by Multi Metrics, Inc. Menlo Park, CA All Rights Reserved

Objectives

1. Review MBD and GD&T to assess their promises.

2. Present ideas for helping them fulfill their promises.

Copyright © 2011 by Multi Metrics, Inc. Menlo Park, CA All Rights Reserved

MULTI METRICS, INC.
Machine Part Geometry Management

***Smart*GD&T**

Review & Assessment of

MBD

Copyright © 2011 by Multi Metrics, Inc. Menlo Park, CA All Rights Reserved

MULTI METRICS, INC.
Machine Part Geometry Management

***Smart*GD&T**

MBE + MBD

1) <u>What is MBD?</u>

Copyright © 2011 by Multi Metrics, Inc. Menlo Park, CA All Rights Reserved

MULTI METRICS, INC.
Machine Part Geometry Management

***Smart*GD&T**

MBE + MBD

1) <u>What is MBD?</u> Among many other things . .

A computational environment which creates a truly functional connection between the 3D features of a machine part and the tolerance zones defined by GD&T to limit their imperfection.

Copyright © 2011 by Multi Metrics, Inc. Menlo Park, CA All Rights Reserved

2) <u>What is MBD for?</u>

Copyright © 2011 by Multi Metrics, Inc. Menlo Park, CA All Rights Reserved

***Smart*GD&T**

MBE + MBD

2) <u>What is MBD for?</u> Among many other things . .

To enable the intelligent application of GD&T controls in the 3D model space, and their intelligent transfer to largely automated downstream processes.

Copyright © 2011 by Multi Metrics, Inc. Menlo Park, CA All Rights Reserved

3) <u>What are MBD's promises?</u>

Copyright © 2011 by Multi Metrics, Inc. Menlo Park, CA All Rights Reserved

3) <u>What are MBD's promises?</u>

1. To vastly improve the ability of mechanical engineers to produce fault tolerant, functional designs right from the get-go.

Copyright © 2011 by Multi Metrics, Inc. Menlo Park, CA All Rights Reserved

3) <u>What are MBD's promises?</u>

1. To vastly improve the ability of mechanical engineers to produce fault tolerant, functional designs right from the get-go.
2. To largely automate the Tolerance Stack-Up Analysis process.

Copyright © 2011 by Multi Metrics, Inc. Menlo Park, CA All Rights Reserved

3) <u>What are MBD's promises?</u>

1. To vastly improve the ability of mechanical engineers to produce fault tolerant, functional designs right from the get-go.
2. To largely automate the Tolerance Stack-Up Analysis process.
3. To completely automate coordinate metrology.

Copyright © 2011 by Multi Metrics, Inc. Menlo Park, CA All Rights Reserved

4) <u>Does MBD fulfill its promises?</u>

Copyright © 2011 by Multi Metrics, Inc. Menlo Park, CA All Rights Reserved

4) <u>Does MBD fulfill its promises?</u>

At this point, only to a very limited extent !

Copyright © 2011 by Multi Metrics, Inc. Menlo Park, CA All Rights Reserved

MULTI METRICS, INC.
Machine Part Geometry Management

***Smart*GD&T**

MBE + MBD

5) <u>What limits the ability of MBD to fulfill its promises?</u>

Copyright © 2011 by Multi Metrics, Inc. Menlo Park, CA All Rights Reserved

5) <u>What limits the ability of MBD to fulfill its promises?</u>

1. The continuing inadequacy of, and confusion surrounding certain Y14.5 and ISO 1101 definitions of GD&T concepts, tools and rules, makes **fully comprehensive** MBD implementation **impossible** at this juncture.

   Very sad !

Copyright © 2011 by Multi Metrics, Inc. Menlo Park, CA All Rights Reserved

***Smart*GD&T**

MBE + MBD

5) <u>What limits the ability of MBD to fulfill its promises?</u>

2. In spite of recognizing its benefits, widespread confusion caused by the complexity of GD&T, leads many potential users to simply avoid it and certainly to fail to even wonder if GD&T "encoding" could ever be intelligently supported.

Copyright © 2011 by Multi Metrics, Inc. Menlo Park, CA All Rights Reserved

***Smart*GD&T**

MBE + MBD

5) <u>What limits the ability of MBD to fulfill its promises?</u>

3. The messy maze (**FUR BALL**) of GD&T callouts which commonly swarm around MBD enhanced 3D models causes even pro-GD&T users to still prefer the 2D drawing environment, thus further limiting interest in MBD systems.

Copyright © 2011 by Multi Metrics, Inc. Menlo Park, CA All Rights Reserved

5) <u>What limits the ability of MBD to fulfill its promises?</u>

4. The still **limited intelligence** of current MBD products, and their **less than brilliant ergonomics**, leads to further reductions in enduser interest and demand.

Copyright © 2011 by Multi Metrics, Inc. Menlo Park, CA All Rights Reserved

MULTI METRICS, INC.
Machine Part Geometry Management

***Smart*GD&T**

MBE + MBD

5) <u>What limits the ability of MBD to fulfill its promises?</u>

5. Limited enduser demand for intelligent GD&T encoding leads to limited interest on the part of CAD companies to invest in their refinement, leaving MBD still far from being able to fulfill its promises.

Copyright © 2011 by Multi Metrics, Inc. Menlo Park, CA All Rights Reserved

6) <u>What's the impact of MBD's Failure to fulfill its promises?</u>

Copyright © 2011 by Multi Metrics, Inc. Menlo Park, CA All Rights Reserved

***Smart*GD&T**

MBE + MBD

6) <u>What's the impact of MBD's Failure to fulfill its promises?</u>

1. Continued use of GD&T in the 2D drawing environment, and continued mis-use due to its complexity.

Copyright © 2011 by Multi Metrics, Inc. Menlo Park, CA All Rights Reserved

MULTI METRICS, INC.
Machine Part Geometry Management

***Smart*GD&T**

MBE + MBD

6) <u>What's the impact of MBD's Failure to fulfill its promises?</u>

1. Continued mis-use of GD&T in the 2 D drawing environment.
2. Low enduser demand for MBD due to ignorance of its potential and therefore low incentive for developers to invest in its refinement.

Oh BAD ! So SAD ! Makes one terribly MAD !

Copyright © 2011 by Multi Metrics, Inc. Menlo Park, CA All Rights Reserved

7) How can MBD be made to fulfill its promises?

Copyright © 2011 by Multi Metrics, Inc. Menlo Park, CA All Rights Reserved

***Smart*GD&T**

MBE + MBD

7) <u>How can MBD be made to fulfill its promises?</u>

1. By cleaning up the foundations of GD&T to enable intelligent MBD implementation.

Copyright © 2011 by Multi Metrics, Inc. Menlo Park, CA All Rights Reserved

***Smart*GD&T**

MBE + MBD

7) <u>How can MBD be made to fulfill its promises?</u>

1. By cleaning up the foundations of GD&T to enable intelligent MBD implementation.
2. By moving forward with the development of a truly smart, highly ergonomic MBD based GD&T encoding engine, in the absolute certainty of payback when the champagne hits the fan.

Copyright © 2011 by Multi Metrics, Inc. Menlo Park, CA All Rights Reserved

MULTI METRICS, INC.
Machine Part Geometry Management

***Smart*GD&T**

Review & Assessment of

GD&T

Copyright © 2011 by Multi Metrics, Inc. Menlo Park, CA All Rights Reserved

MULTI METRICS, INC.
Machine Part Geometry Management

***Smart*GD&T**

What is GD&T ?

Copyright © 2011 by Multi Metrics, Inc. Menlo Park, CA All Rights Reserved

What is GD&T ?

Many people think of GD&T as

Copyright © 2011 by Multi Metrics, Inc. Menlo Park, CA All Rights Reserved

What is GD&T ?

Many people think of GD&T as

Grim, **D**epressing **&** **T**roublesome

Copyright © 2011 by Multi Metrics, Inc. Menlo Park, CA All Rights Reserved

and a fine way to waste a

Copyright © 2011 by Multi Metrics, Inc. Menlo Park, CA All Rights Reserved

MULTI METRICS, INC.
Machine Part Geometry Management

***Smart*GD&T**

and a fine way to waste a

Great **D**eal of **T**ime

Copyright © 2011 by Multi Metrics, Inc. Menlo Park, CA All Rights Reserved

But others find GD&T

Copyright © 2011 by Multi Metrics, Inc. Menlo Park, CA All Rights Reserved

But others find GD&T

Grand, **D**elicious **&** **T**antalizing

Copyright © 2011 by Multi Metrics, Inc. Menlo Park, CA All Rights Reserved

and in fact the . . .

Greatest **D**esign **T**ool

ever !

Copyright © 2011 by Multi Metrics, Inc. Menlo Park, CA All Rights Reserved

GD&T

is therefore all about

managing imperfect geometry

Copyright © 2011 by Multi Metrics, Inc. Menlo Park, CA All Rights Reserved

GD&T

is therefore all about

managing imperfect geometry

perfectly!

Copyright © 2011 by Multi Metrics, Inc. Menlo Park, CA All Rights Reserved

And without

GD&T

Copyright © 2011 by Multi Metrics, Inc. Menlo Park, CA All Rights Reserved

And without

GD&T

all

Tolerance Stack-Up Analysis

&

Coordinate Metrology

are meaningless

Copyright © 2011 by Multi Metrics, Inc. Menlo Park, CA All Rights Reserved

Purpose of GD&T

Copyright © 2011 by Multi Metrics, Inc. Menlo Park, CA All Rights Reserved

Purpose of GD&T

Most people would say . . .

The main purpose of GD&T is to communicate Design intent **unambiguously** to manufacturing and inspection !

Copyright © 2011 by Multi Metrics, Inc. Menlo Park, CA All Rights Reserved

Purpose of GD&T

but in fact . . .

The primary purpose of GD&T, is to ensure that **what** we communicate is **worth** communicating, namely represents manufacturable, assemblable and operational parts.

Copyright © 2011 by Multi Metrics, Inc. Menlo Park, CA All Rights Reserved

In greater detail . . .

Copyright © 2011 by Multi Metrics, Inc. Menlo Park, CA All Rights Reserved

Definition of GD&T

Copyright © 2011 by Multi Metrics, Inc. Menlo Park, CA All Rights Reserved

Definition of GD&T

GD&T is a symbolic language for

Copyright © 2011 by Multi Metrics, Inc. Menlo Park, CA All Rights Reserved

Definition of GD&T

GD&T is a symbolic language for

1. **researching**
2. **refining** and
3. **encoding**

Copyright © 2011 by Multi Metrics, Inc. Menlo Park, CA All Rights Reserved

Definition of GD&T

GD&T is a symbolic language for

1. **researching**
2. **refining** and
3. **encoding**

the **functions** of each feature of a part and for maximizing the **fault tolerance** of a Design,

Copyright © 2011 by Multi Metrics, Inc. Menlo Park, CA All Rights Reserved

Definition of GD&T

GD&T is a symbolic language for

1. **researching**
2. **refining** and
3. **encoding**

the **functions** of each feature of a part and for maximizing the **fault tolerance** of a Design,

in order - through **decoding** - to

Copyright © 2011 by Multi Metrics, Inc. Menlo Park, CA All Rights Reserved

MULTI METRICS, INC.
Machine Part Geometry Management

Definition of GD&T

GD&T is a symbolic language for

1. **researching**
2. **refining** and
3. **encoding**

the **functions** of each feature of a part and for maximizing the **fault tolerance** of a Design,

in order - through **decoding** - to

1. **guarantee assemblability** through truly functional, Tolerance Stack-Up Analysis

Copyright © 2011 by Multi Metrics, Inc. Menlo Park, CA All Rights Reserved

MULTI METRICS, INC.
Machine Part Geometry Management

Definition of GD&T

GD&T is a symbolic language for

1. **researching**
2. **refining** and
3. **encoding**

the **functions** of each feature of a part and for maximizing the **fault tolerance** of a Design,

in order - through **decoding** - to

1. **guarantee assemblability** through truly functional, Tolerance Stack-Up Analysis
2. **reduce manufacturing cost** by setting precise, achievable objectives

Copyright © 2011 by Multi Metrics, Inc. Menlo Park, CA All Rights Reserved

Definition of GD&T

GD&T is a symbolic language for

1. **researching**
2. **refining** and
3. **encoding**

the **functions** of each feature of a part and for maximizing the **fault tolerance** of a Design,

in order - through **decoding** - to

1. **guarantee assemblability** through truly functional, Tolerance Stack-Up Analysis
2. **reduce manufacturing cost** by setting precise, achievable objectives
3. turn **inspection** into a **scientific process**

Copyright © 2011 by Multi Metrics, Inc. Menlo Park, CA All Rights Reserved

How is GD&T used in **Design**?

Copyright © 2011 by Multi Metrics, Inc. Menlo Park, CA All Rights Reserved

How is GD&T used in **Design**?

1. For **researching** the functional interaction between mating product components during early design stages,

Copyright © 2011 by Multi Metrics, Inc. Menlo Park, CA All Rights Reserved

How is GD&T used in **Design**?

1. For **researching** the functional interaction between mating product components during early design stages,

2. For **refining** the geometry of certain features in order to maximize the fault tolerance of a design,

Copyright © 2011 by Multi Metrics, Inc. Menlo Park, CA All Rights Reserved

How is GD&T used in **Design**?

1. For **researching** the functional interaction between mating product components during early design stages,

2. For **refining** the geometry of certain features in order to maximize the fault tolerance of a design,

3. For **guaranteeing** the assemblability of in spec mating parts through tolerance stack-up analysis, and

Copyright © 2011 by Multi Metrics, Inc. Menlo Park, CA All Rights Reserved

How is GD&T used in **Design**?

1. For **researching** the functional interaction between mating product components during early design stages,

2. For **refining** the geometry of certain features in order to maximize the fault tolerance of a design,

3. For **guaranteeing** the assemblability of in spec mating parts through tolerance stack-up analysis, and

4. For **encoding** the functions of each feature of a part in absolutely unambiguous terms to specify its geometric requirements for manufacturing and inspection.

Copyright © 2011 by Multi Metrics, Inc. Menlo Park, CA All Rights Reserved

How is GD&T used in **Manufacturing**?

Copyright © 2011 by Multi Metrics, Inc. Menlo Park, CA All Rights Reserved

How is GD&T used in **Manufacturing**?

GD&T does not specify manufacturing **PROCESSES !**

Copyright © 2011 by Multi Metrics, Inc. Menlo Park, CA All Rights Reserved

How is GD&T used in **Manufacturing**?

GD&T does not specify manufacturing **PROCESSES !**

It merely specifies manufacturing **OBJECTIVES**, and serves only to guide the selection and management of manufacturing processes.

Copyright © 2011 by Multi Metrics, Inc. Menlo Park, CA All Rights Reserved

How is GD&T used in **Inspection**?

Copyright © 2011 by Multi Metrics, Inc. Menlo Park, CA All Rights Reserved

How is GD&T used in **Inspection**?

GD&T does not specify inspection **OBJECTIVES !**

Copyright © 2011 by Multi Metrics, Inc. Menlo Park, CA All Rights Reserved

How is GD&T used in **Inspection**?

GD&T does not specify inspection **OBJECTIVES !**

It specifies inspection **PROCESSES** in their entirety.

Copyright © 2011 by Multi Metrics, Inc. Menlo Park, CA All Rights Reserved

How is GD&T used in **Inspection**?

GD&T does not specify inspection **OBJECTIVES !**
It specifies inspection **PROCESSES** in their entirety.

Without GD&T, metrology, and therefore effective assessment of **end product quality** and **manufacturing process quality** are simply impossible

Copyright © 2011 by Multi Metrics, Inc. Menlo Park, CA All Rights Reserved

3) What are GD&T's Promises?

Copyright © 2011 by Multi Metrics, Inc. Menlo Park, CA All Rights Reserved

3) <u>What are GD&T's Promises?</u>

1. To guarantee absolutely reliable **tolerance stack-up analysis** on which to base acceptance or revision of the code.

Copyright © 2011 by Multi Metrics, Inc. Menlo Park, CA All Rights Reserved

3) <u>What are GD&T's Promises?</u>

1. To guarantee absolutely reliable **tolerance stack-up analysis** on which to base acceptance or revision of the code.

2. To guarantee absolutely reliable **communication** of **design intent**, to enable manufacturing to make it right the first time.

Copyright © 2011 by Multi Metrics, Inc. Menlo Park, CA All Rights Reserved

3) <u>What are GD&T's Promises?</u>

1. To guarantee absolutely reliable **tolerance stack-up analysis** on which to base acceptance or revision of the code.
2. To guarantee absolutely reliable **communication** of **design intent**, to enable manufacturing to make it right the first time.
3. To enable absolutely reliable, **fully automatic** coordinate metrology.

Copyright © 2011 by Multi Metrics, Inc. Menlo Park, CA All Rights Reserved

4) Does GD&T fulfill Promises?

Copyright © 2011 by Multi Metrics, Inc. Menlo Park, CA All Rights Reserved

4) Does GD&T fulfill Promises?

Almost, but with great difficulty !

Copyright © 2011 by Multi Metrics, Inc. Menlo Park, CA All Rights Reserved

5) Why does GD&T fail to fulfill its Promises?

Copyright © 2011 by Multi Metrics, Inc. Menlo Park, CA All Rights Reserved

5) Why does GD&T fail to fulfill its Promises?

1. Due to the difficulty of mastering its **necessary complexity**, namely the complexity of its code which enables it to deal effectively with the complexity of imperfect real geometry.

Copyright © 2011 by Multi Metrics, Inc. Menlo Park, CA All Rights Reserved

5) Why does GD&T fail to fulfill its Promises?

1. Due to the difficulty of mastering its **necessary complexity**, namely the complexity of its code which enables it to deal effectively with the complexity of imperfect real geometry.

2. Due to the continuing **imprecision** of certain concepts, tools and rules defined in the ASME Y14.5 and ISO 1101 Standards.

Copyright © 2011 by Multi Metrics, Inc. Menlo Park, CA All Rights Reserved

6) <u>What's the impact of GD&T's failure to fulfill its promises?</u>

Copyright © 2011 by Multi Metrics, Inc. Menlo Park, CA All Rights Reserved

6) <u>What's the impact of GD&T's failure to fulfill its promises?</u>

Huge wastes of time struggling to **interpret** GD&T **decorated** drawings and the the cost of getting it wrong.

Copyright © 2011 by Multi Metrics, Inc. Menlo Park, CA All Rights Reserved

6) <u>What's the impact of GD&T's failure to fulfill its promises?</u>

Huge wastes of time struggling to **interpret** GD&T **decorated** drawings and the the cost of getting it wrong.

Reduced interest on the part of users and developers **in perfecting MBD**, the only hope we have for reliably managing and partially or completely automating:

1. The GD&T encoding process.
2. Tolerance stack-up analysis.
3. Inspection processes.

Copyright © 2011 by Multi Metrics, Inc. Menlo Park, CA All Rights Reserved

7) How can GD&T be enabled to fulfill its promises?

Copyright © 2011 by Multi Metrics, Inc. Menlo Park, CA All Rights Reserved

7) <u>How can GD&T be enabled to fulfill its promises?</u>

1. By being reduced to crystalline sets of concepts, tools, rules, processes and best practices in refined versions of the current Standards – or – for example as captured in the heuristics of ***Smart*GD&T™ *Technology*** !

Copyright © 2011 by Multi Metrics, Inc. Menlo Park, CA All Rights Reserved

7) <u>How can GD&T be enabled to fulfill its promises?</u>

1. By being reduced to crystalline sets of concepts, tools, rules, processes and best practices in refined versions of the current Standards – or – for example as captured in the heuristics of ***Smart*GD&T™ *Technology*** !

2. By then being empowered by intelligent, ergonomic implementation in the world of MBD.

Copyright © 2011 by Multi Metrics, Inc. Menlo Park, CA All Rights Reserved

"Decorative" versus "Functional"

GD&T

Copyright © 2011 by Multi Metrics, Inc. Menlo Park, CA All Rights Reserved

“Decorative” versus “Functional”

GD&T

Encoding the functions of the Features of a

Flat Edged Vacuum Flange

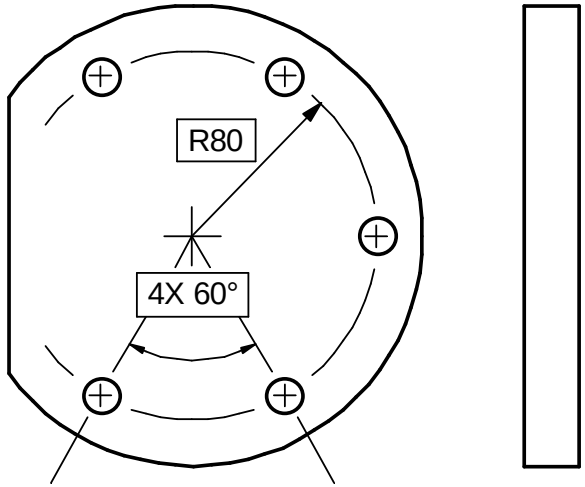

Copyright © 2011 by Multi Metrics, Inc. Menlo Park, CA All Rights Reserved

"Decorative" versus "Functional"

GD&T

Encoding the functions of the Features of a

Flat Edged Vacuum Flange

Functional Objectives

1) One face of the flange shall be flat within 0.01mm to create a reliable vacuum seal with an O-ring in a mating flange.

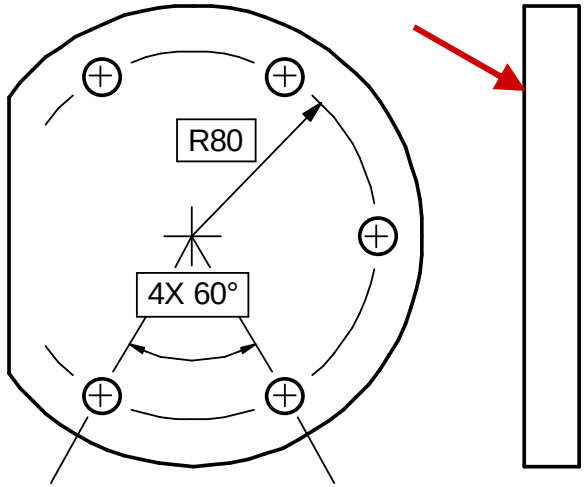

Copyright © 2011 by Multi Metrics, Inc. Menlo Park, CA All Rights Reserved

Encoding the functions of the Features of a

Flat Edged Vacuum Flange

Functional Objectives

1) One face of the flange shall be flat within 0.01mm to create a reliable vacuum seal with an O-ring in a mating flange.

2) The opposing face shall be located within 1mm but parallel to the first within 0.1mm.

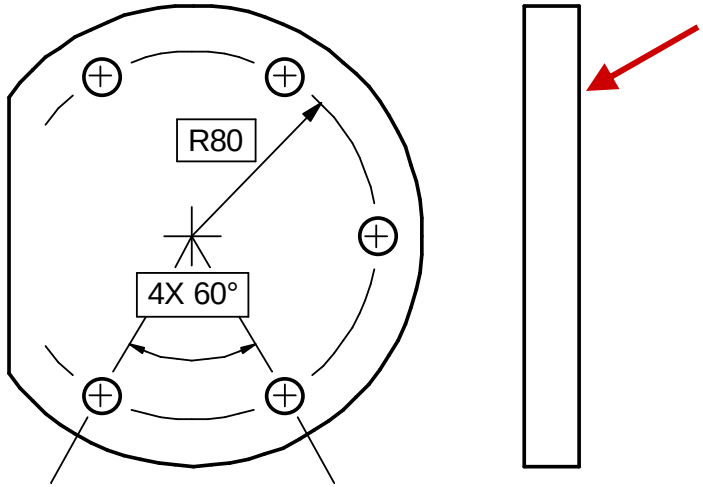

Copyright © 2011 by Multi Metrics, Inc. Menlo Park, CA All Rights Reserved

Encoding the functions of the Features of a

Flat Edged Vacuum Flange

Functional Objectives

1) One face of the flange shall be flat within 0.01mm to create a reliable vacuum seal with an O-ring in a mating flange.

2) The opposing face shall be located within 1mm but parallel to the first within 0.1mm.

3) The bolt hole pattern shall be loosely centered in the flange but otherwise tightly controlled to serve as a locating feature.

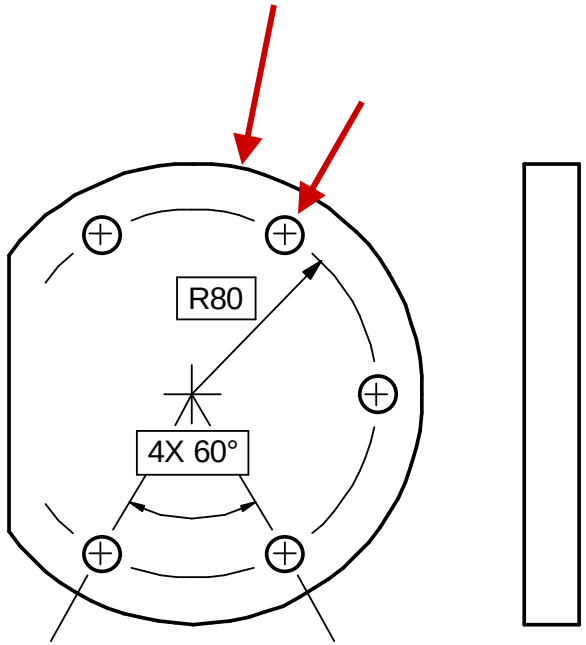

Copyright © 2011 by Multi Metrics, Inc. Menlo Park, CA All Rights Reserved

"Decorative" versus "Functional"

GD&T

Encoding the functions of the Features of a

Flat Edged Vacuum Flange

Functional Objectives

1) One face of the flange shall be flat within 0.01mm to create a reliable vacuum seal with an O-ring in a mating flange.

2) The opposing face shall be located within 1mm but parallel to the first within 0.1mm.

3) The bolt hole pattern shall be loosely centered in the flange but otherwise tightly controlled to serve as a locating feature.

4) The left hand edge of the flange shall be tightly controlled relative to the bolt pattern to reliably align and locate a mating part.

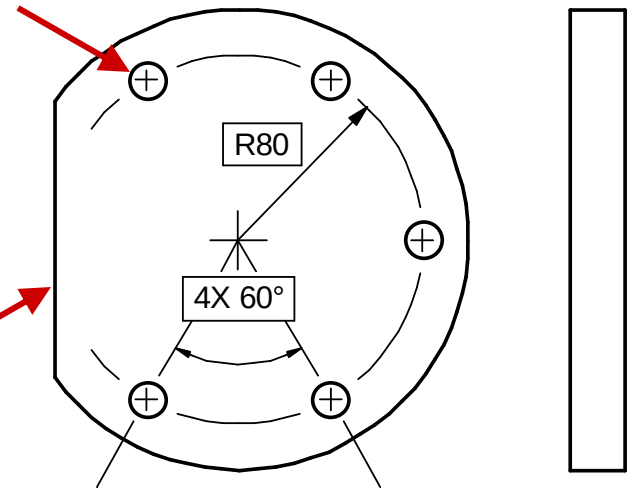

Copyright © 2011 by Multi Metrics, Inc. Menlo Park, CA All Rights Reserved

"Decorative" versus "Functional"

GD&T

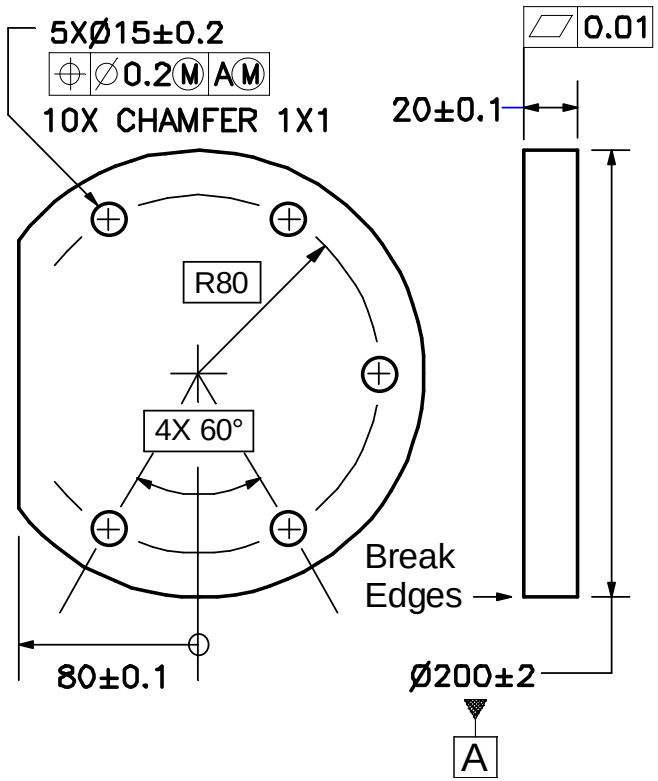

First cut !

How are we doing?

Copyright © 2011 by Multi Metrics, Inc. Menlo Park, CA All Rights Reserved

The "decorated" Drawing

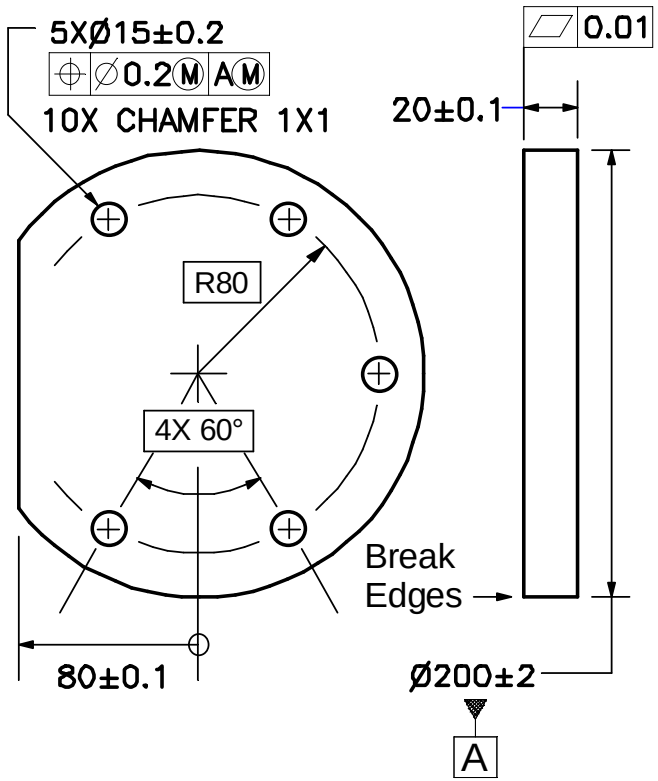

1. Part symmetry should have been broken but was not.
2. Thickness tolerance was made tighter than necessarily to control parallelism.
3. Datum Feature A is non-functional for the purpose assigned to it.
4. The Tolerance Zone Size modifier (M) on Position does not encode the location function of the bolt pattern.
5. The control on the flat edge in no way represents the required constraints.

Copyright © 2011 by Multi Metrics, Inc. Menlo Park, CA All Rights Reserved

“Decorative” versus “Functional”

GD&T

Second cut !

How are we doing?

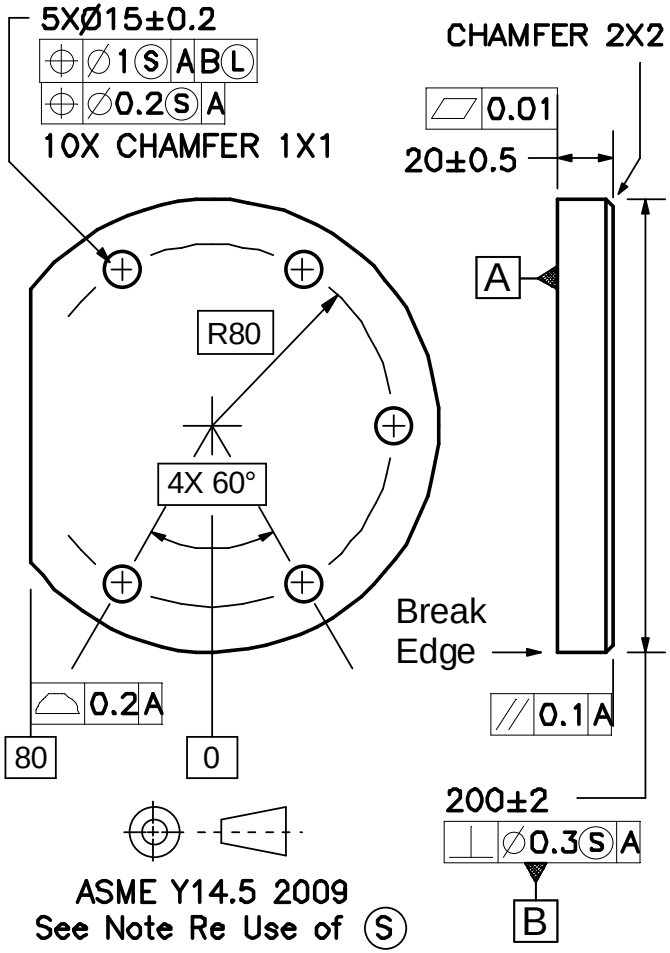

Copyright © 2011 by Multi Metrics, Inc. Menlo Park, CA All Rights Reserved

The "functional" Drawing

1. The symmetry is broken.
2. The thickness is controlled loosely and the flatness and parallelism of the faces independently and functionally.
3. A Y14.5 Standard is referenced and the projection preference is specified.
4. The Datum Features are functional.
5. The bolt hole pattern and the flat edge are controlled in a manner to fully represent their functions in a highly fault tolerant way.

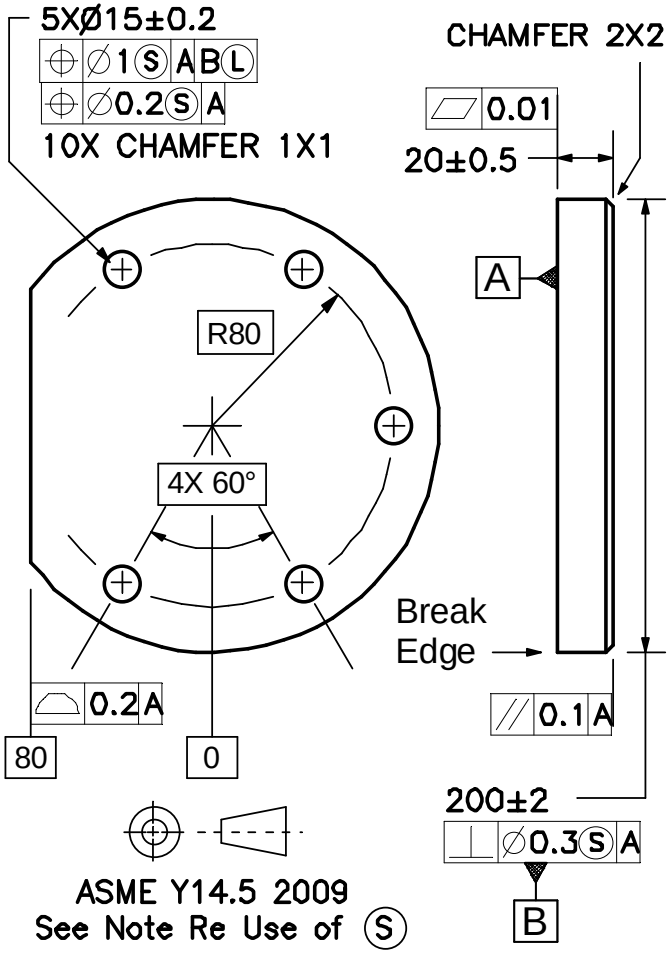

Copyright © 2011 by Multi Metrics, Inc. Menlo Park, CA All Rights Reserved

“Decorative” versus “Functional”

GD&T

“decorated”

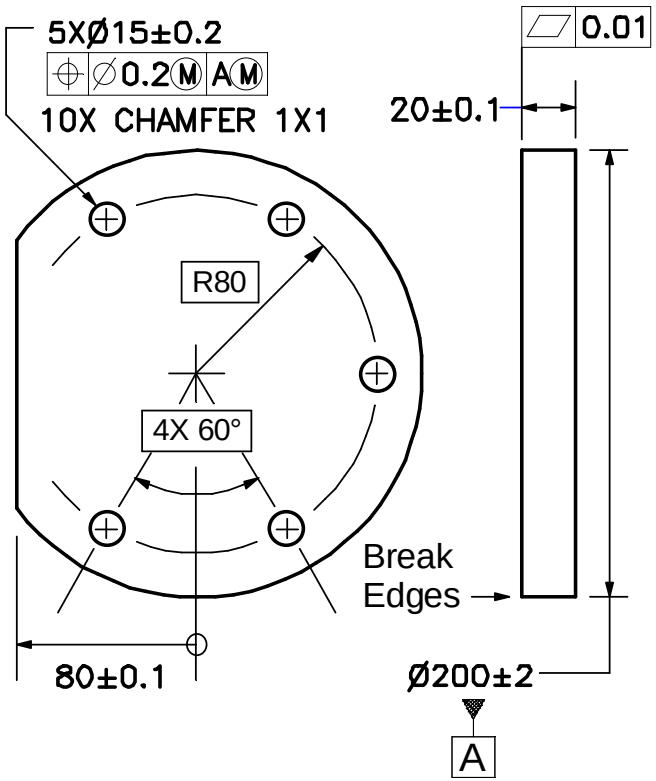

“functional”

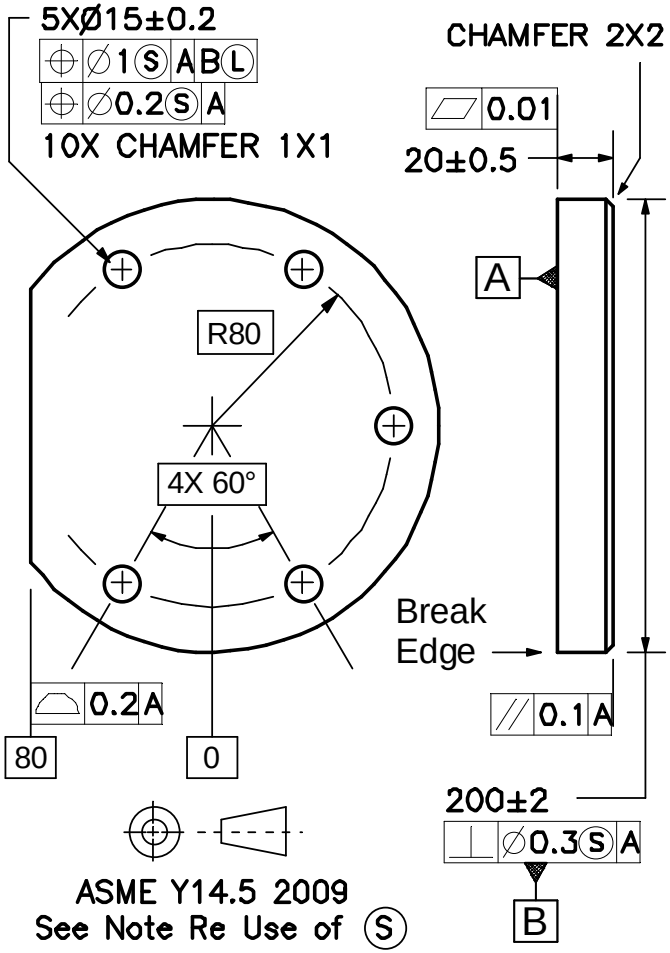

Copyright © 2011 by Multi Metrics, Inc. Menlo Park, CA All Rights Reserved

MULTI METRICS, INC.
Machine Part Geometry Management

*Smart*GD&T

MBD + "Functional" GD&T

Complete Automation

of the

Coordinate Metrology Process

Copyright © 2011 by Multi Metrics, Inc. Menlo Park, CA All Rights Reserved

*Smart*GD&T

An Example of Coordinate Metrology Process Automation

Based on

InnovMetric Inc.'s

PolyWorks Inspector™ V12

A Multi Metrics, Inc.

Smart*GD&T™ *Technology

Licensee

Copyright © 2011 by Multi Metrics, Inc. Menlo Park, CA All Rights Reserved

MULTI METRICS, INC.
Machine Part Geometry Management

*Smart*GD&T

PolyWorks Inspector
Process Steps and Timing

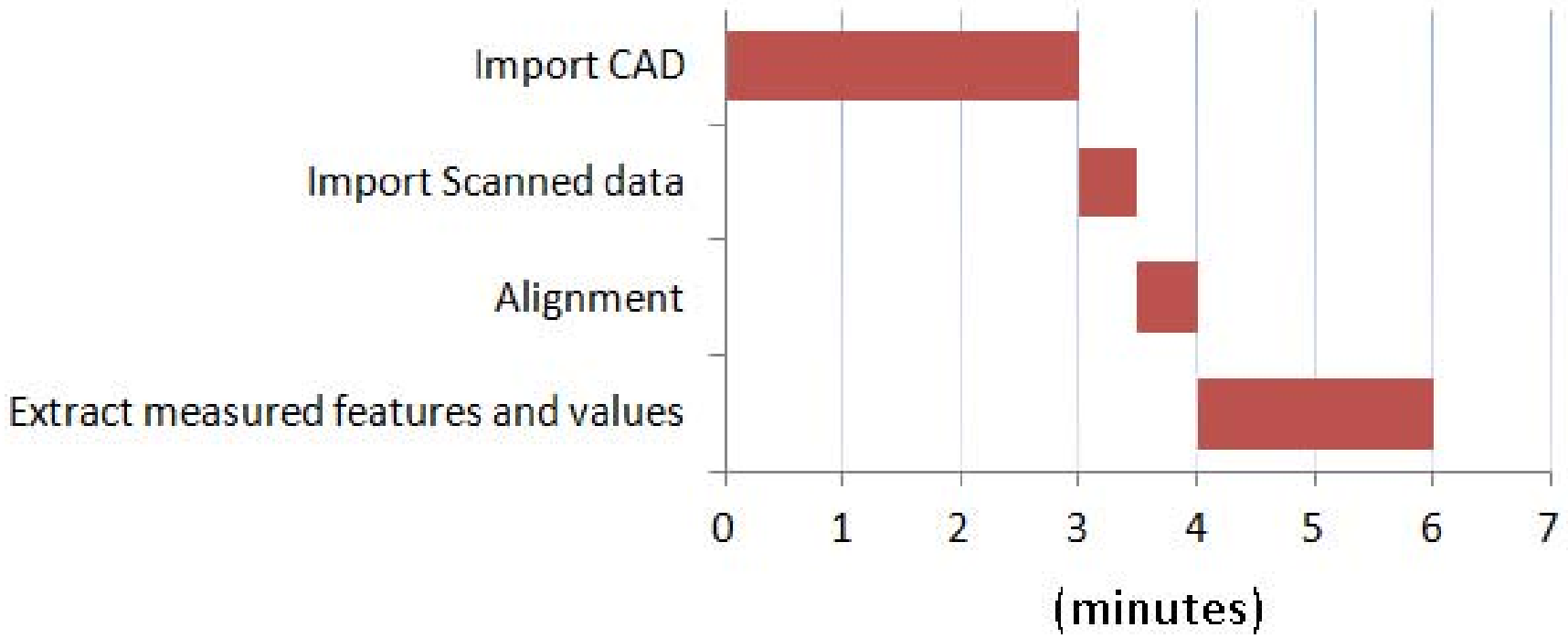

Copyright © 2011 by Multi Metrics, Inc. Menlo Park, CA All Rights Reserved

Flat Edged Flange Inspection

Report Author:
Date: 12/1/2011

1. Import CAD model.
The features and the GD&T controls are automatically imported.

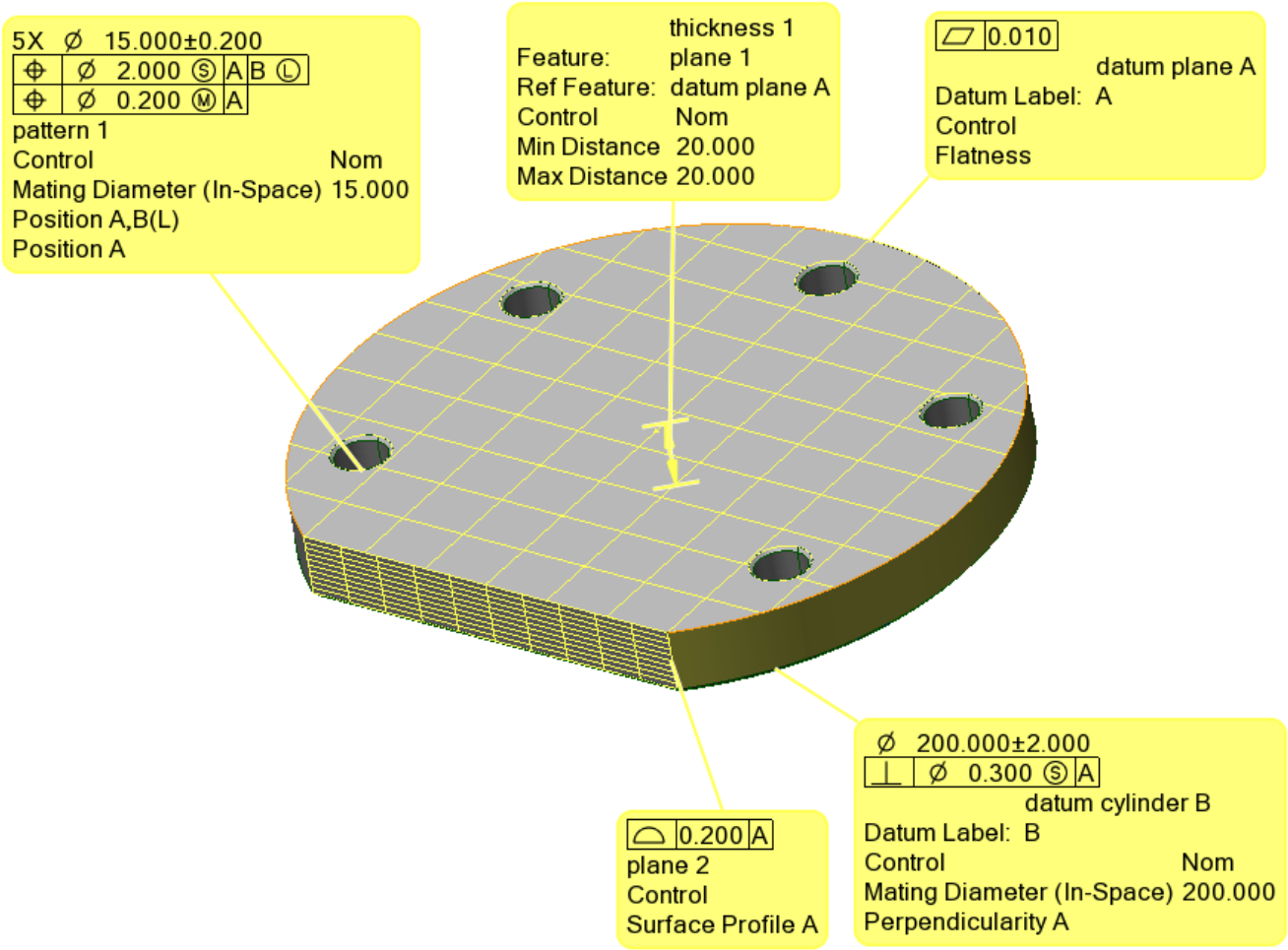

Organization: A company
Operator: Whoever
E-mail: whoever@acompany.com

Part name: Scanned Part Flat Edged Flange
Part number: 123-456
Device: Laser scanner

2. Import scanned data

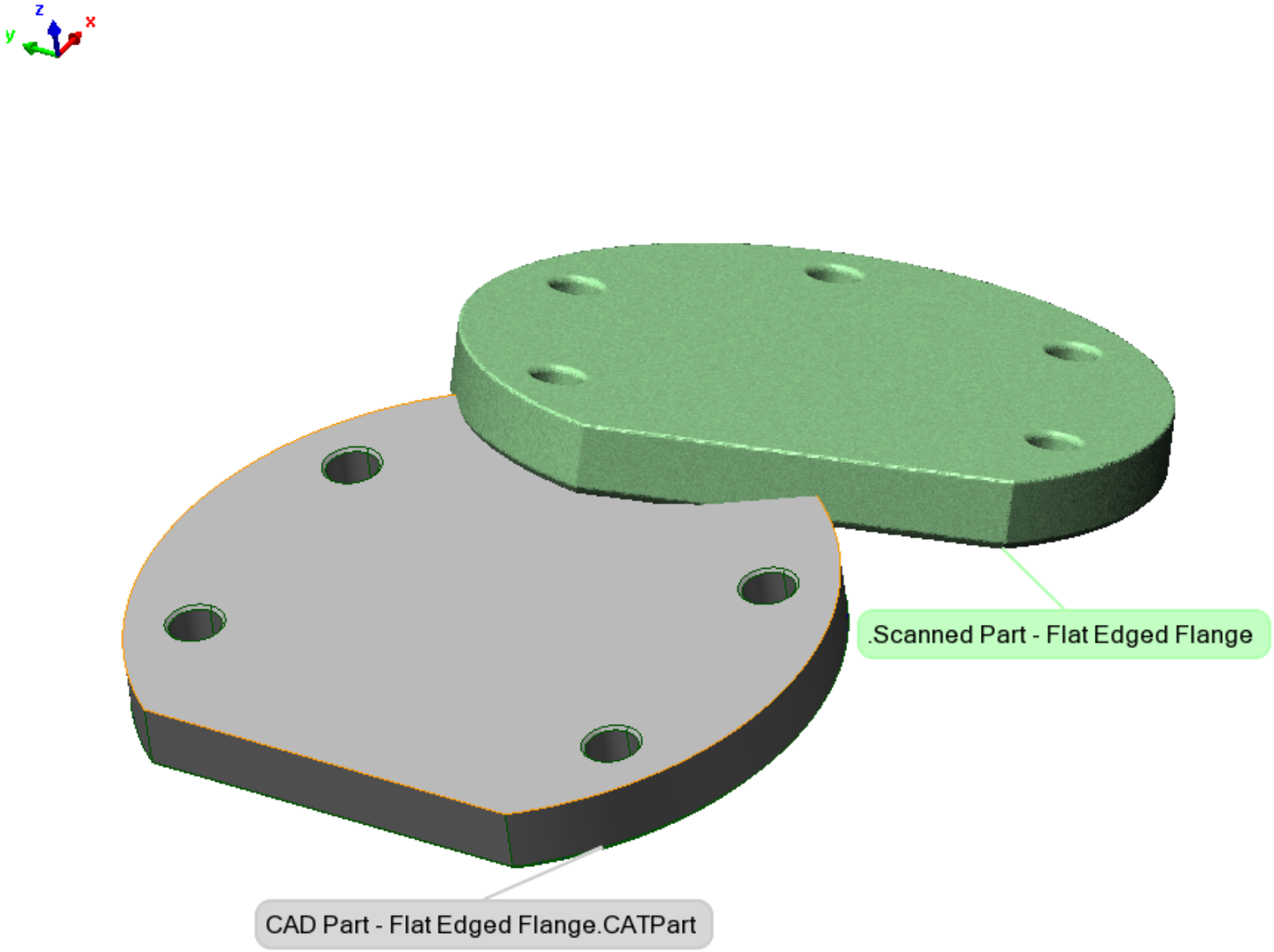

3. Align the scanned data to the CAD model

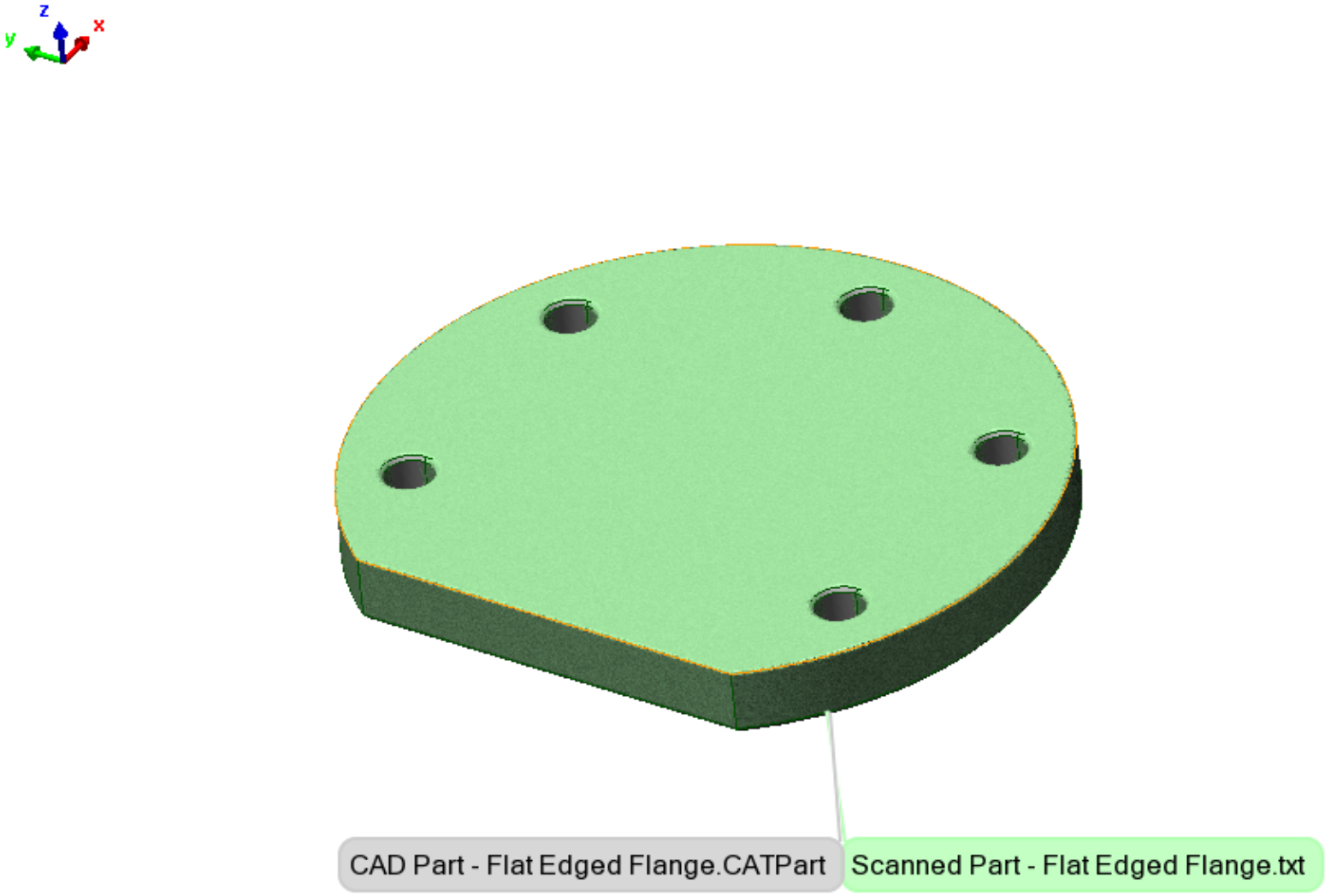

4. Extract measured features.

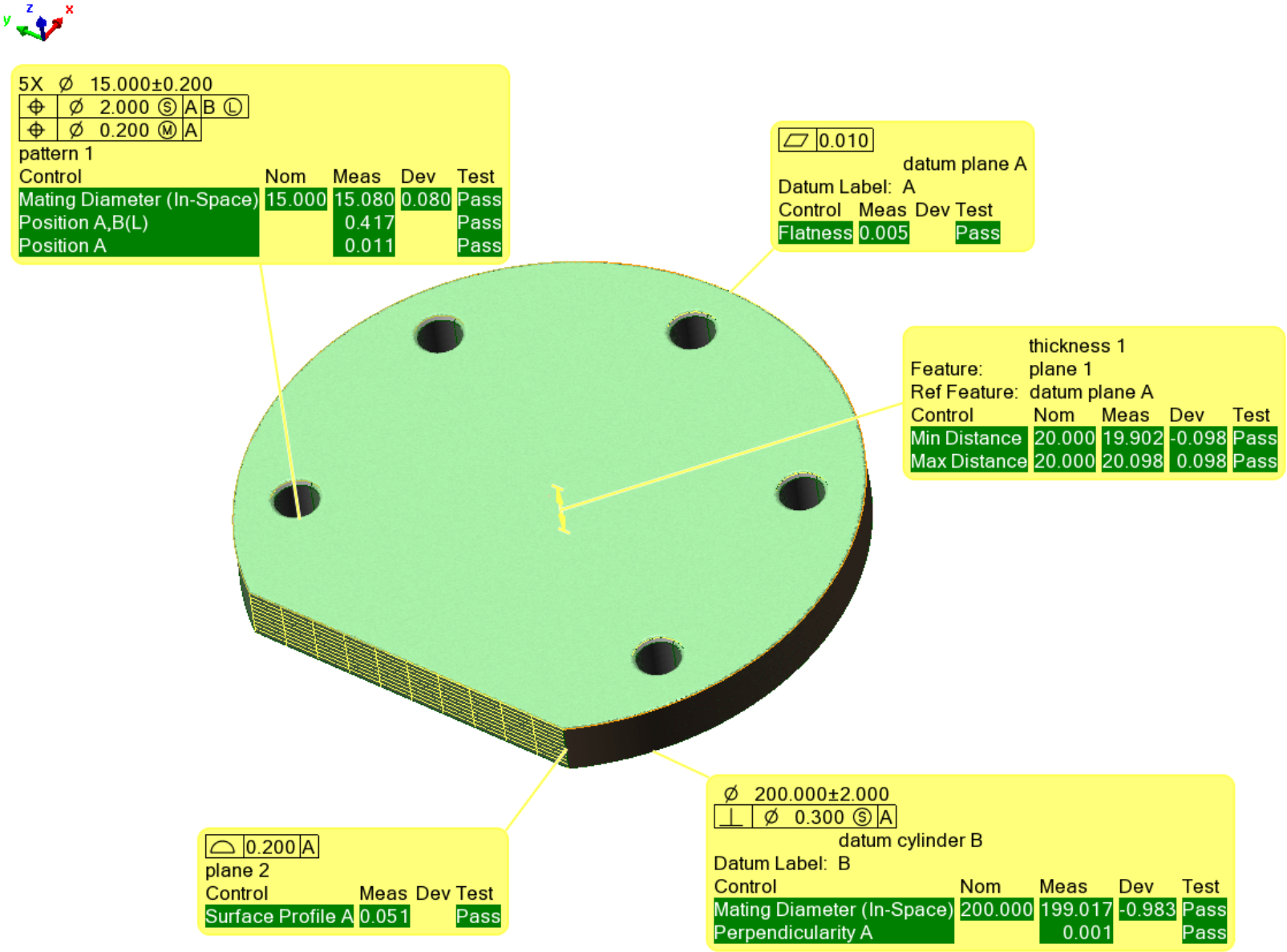

5. Inspection results

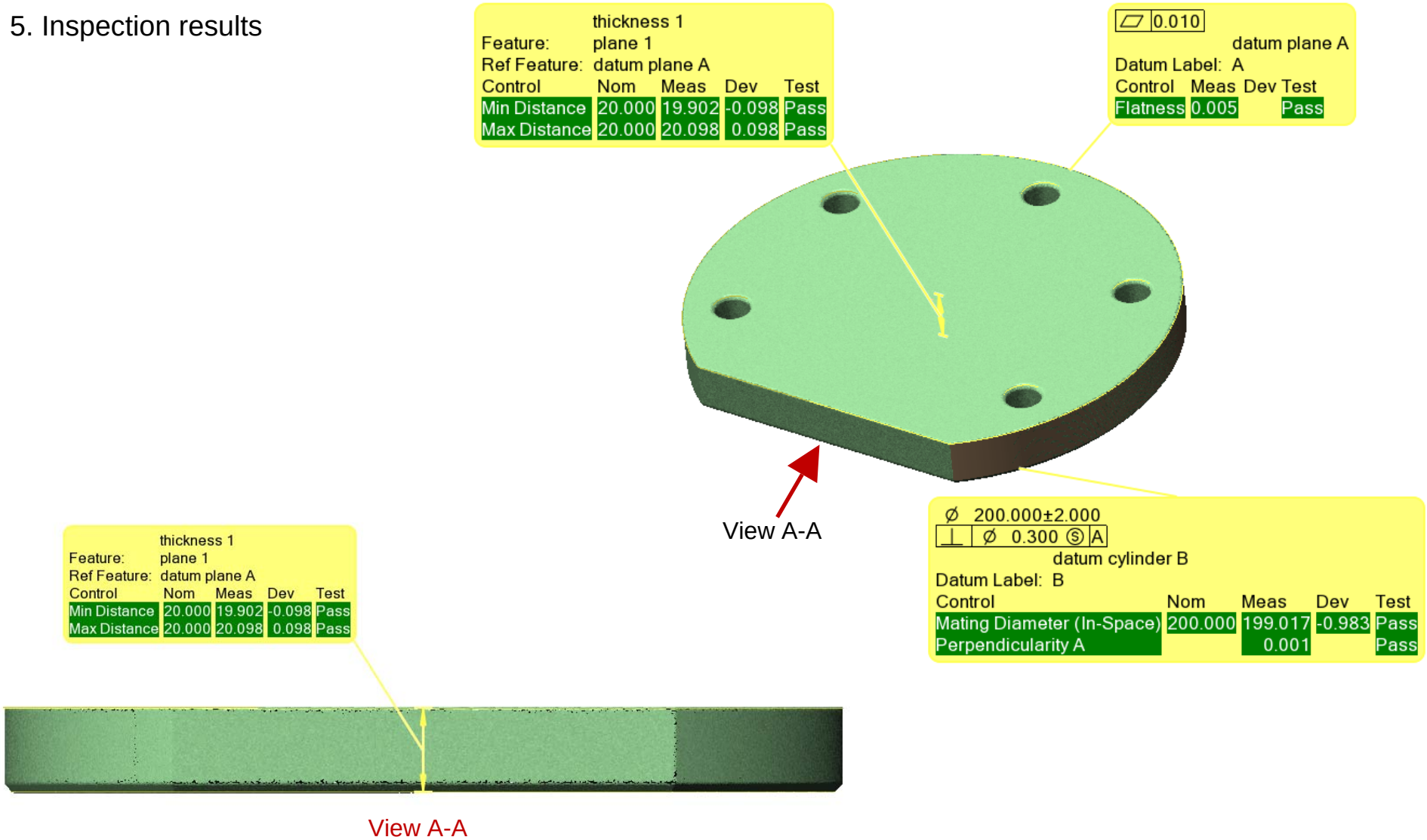

Table Type **Feature**

Name	Control	Nominal	Measured	Tol+	Tol-	TZ Size	Deviation	Test
thickness 1	Min Distance	20.000	19.902	1.000	-1.000		-0.098	Pass
thickness 1	Max Distance	20.000	20.098	1.000	-1.000		0.098	Pass
datum plane A	Flatness		0.005			0.010		Pass
datum cylinder B	Mating Diameter (In-Space)	200.000	199.017	2.000	-2.000		-0.983	Pass
datum cylinder B	Perpendicularity A		0.001			0.300		Pass

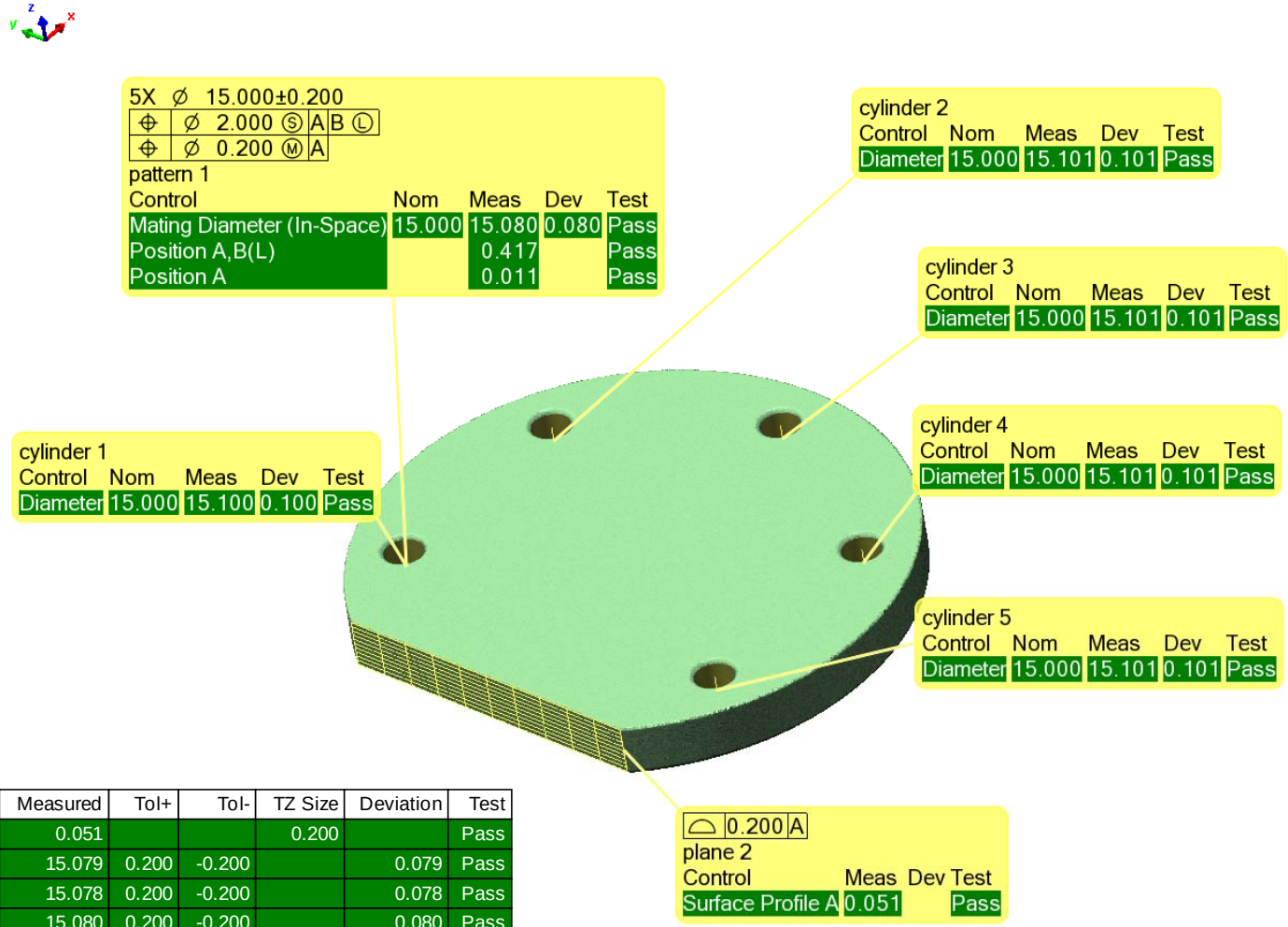

Table Type **Feature**

Name	Control	Nominal	Measured	Tol+	Tol-	TZ Size	Deviation	Test
plane 2	Surface Profile A		0.051			0.200		Pass
pattern 1	Mating Diameter (In-Space)	15.000	15.079	0.200	-0.200		0.079	Pass
pattern 1	Mating Diameter (In-Space)	15.000	15.078	0.200	-0.200		0.078	Pass
pattern 1	Mating Diameter (In-Space)	15.000	15.080	0.200	-0.200		0.080	Pass
pattern 1	Mating Diameter (In-Space)	15.000	15.079	0.200	-0.200		0.079	Pass
pattern 1	Mating Diameter (In-Space)	15.000	15.078	0.200	-0.200		0.078	Pass
pattern 1	Position A,B(L)		0.417			2.000		Pass
pattern 1	Position A,B(L)		0.376			2.000		Pass
pattern 1	Position A,B(L)		0.326			2.000		Pass
pattern 1	Position A,B(L)		0.320			2.000		Pass
pattern 1	Position A,B(L)		0.367			2.000		Pass
pattern 1	Position A		0.011			0.200		Pass
pattern 1	Position A		0.010			0.200		Pass
pattern 1	Position A		0.010			0.200		Pass
pattern 1	Position A		0.010			0.200		Pass
pattern 1	Position A		0.010			0.200		Pass

What is
***Smart*GD&T** ?

***Smart*GD&T** is a **rule-based**, process driven approach to either the ASME Y14.5M 1994 or ISO 1101 standard, which makes it possible to **"encode"** and **"decode"**, rather than "interpret" GD&T, and get it right the first time.

Copyright © 2011 by Multi Metrics, Inc. Menlo Park, CA All Rights Reserved

Conclusions

Copyright © 2011 by Multi Metrics, Inc. Menlo Park, CA All Rights Reserved

Conclusions

1. GD&T is the ultimate tool to enable useful MBD.
2. MBD is the ultimate tool to enable functional GD&T.

Copyright © 2011 by Multi Metrics, Inc. Menlo Park, CA All Rights Reserved

Conclusions

1. GD&T is the ultimate tool to enable useful MBD.
2. MBD is the ultimate tool to enable functional GD&T.

---

3. It is time to clean up the ISO and ASME GD&T Standards.
4. It is time to start investing in heavily MBD development.

Copyright © 2011 by Multi Metrics, Inc. Menlo Park, CA All Rights Reserved

Thank you !

Bill Tandler

bill@multimetrics.com

Menlo Park, CA

Copyright © 2011 by Multi Metrics, Inc. Menlo Park, CA All Rights Reserved