NAWC
Aircraft Division
NAVAL AIR WARFARE CENTER

INERT GAS GENERATORS Used for Fire Protection Aboard Navy Aircraft

Systems Requirements Depar▮men▮

DAVID D. THURSTON

HALON 1301 ALTERNATIVES

INERT GAS GENERATION - TECHNICAL PLAN 2.7

- Project goal
  - Develop, demonstrate, and validate the use of inert gas generation technologies in aircraft dry bays and engine nacelles

HALON 1301 ALTERNATIVES

INERT GAS GENERATION - TECHNICAL PLAN 2.7

- Gas generator performance
  - Method of extinguishment
    - Oxygen depletion
  - Exhaust products
    - CO_2, N_2, H_2O, and trace particulates
  - Exhaust temps
    - 1200 degrees F
  - Activation method
    - Pyrotechnic initiator
  - Burn time
    - 100-1000 milliseconds

HALON 1301 ALTERNATIVES

INERT GAS GENERATION - TECHNICAL PLAN 2.7

- Technical issues
  - Overall fire extinguishing performance
  - Gas distribution throughout protection areas given cluttered bays
  - Device reaction time
  - Gas dwell time in bay
  - Prevention of re-ignition
  - Concentration sensing equipment sensitivity to inert gases
  - Trace particulate material compatibility

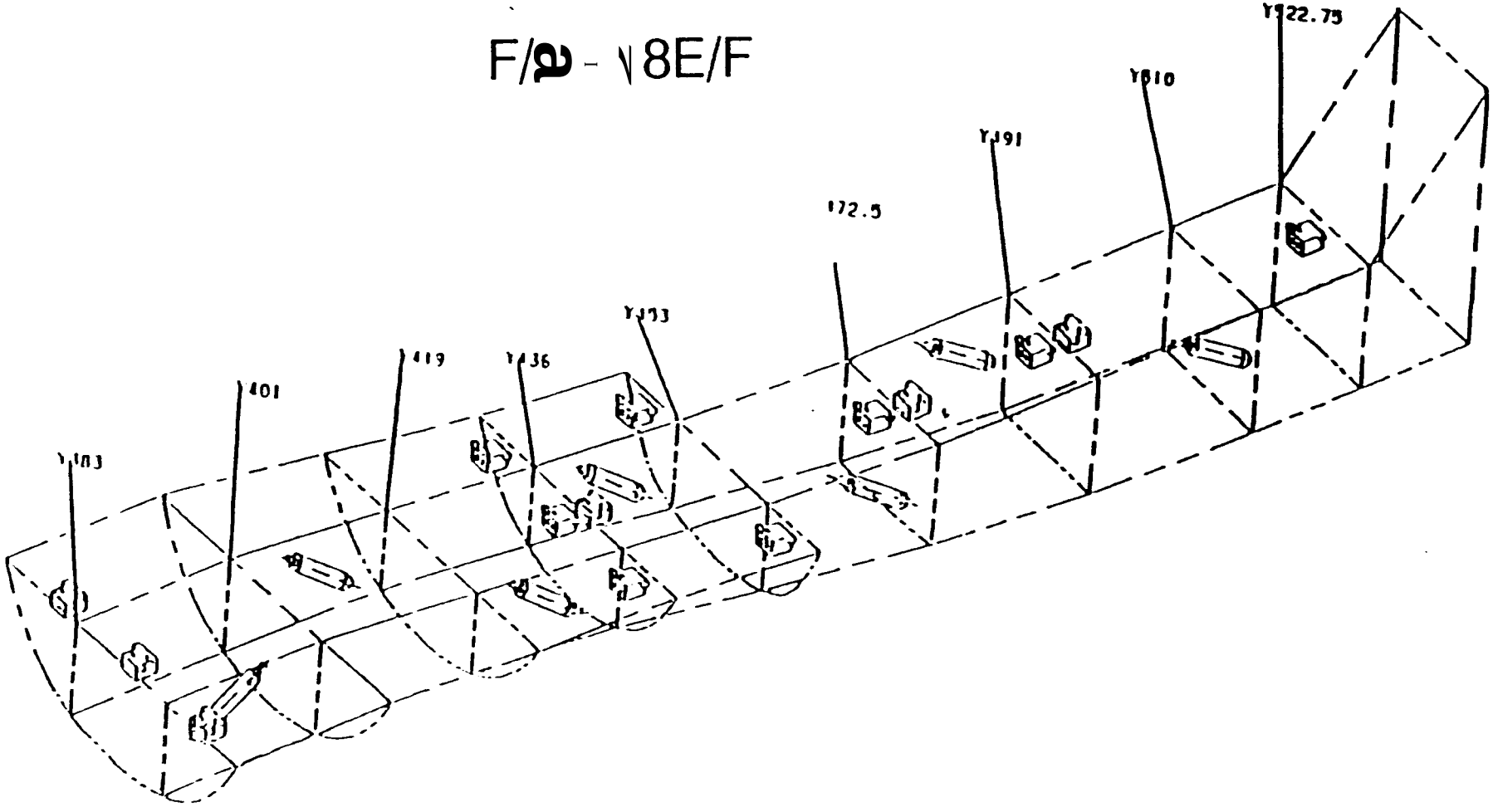
Y401
Y419
Y436
Y453
172.5
Y491
Y510
Y522.75

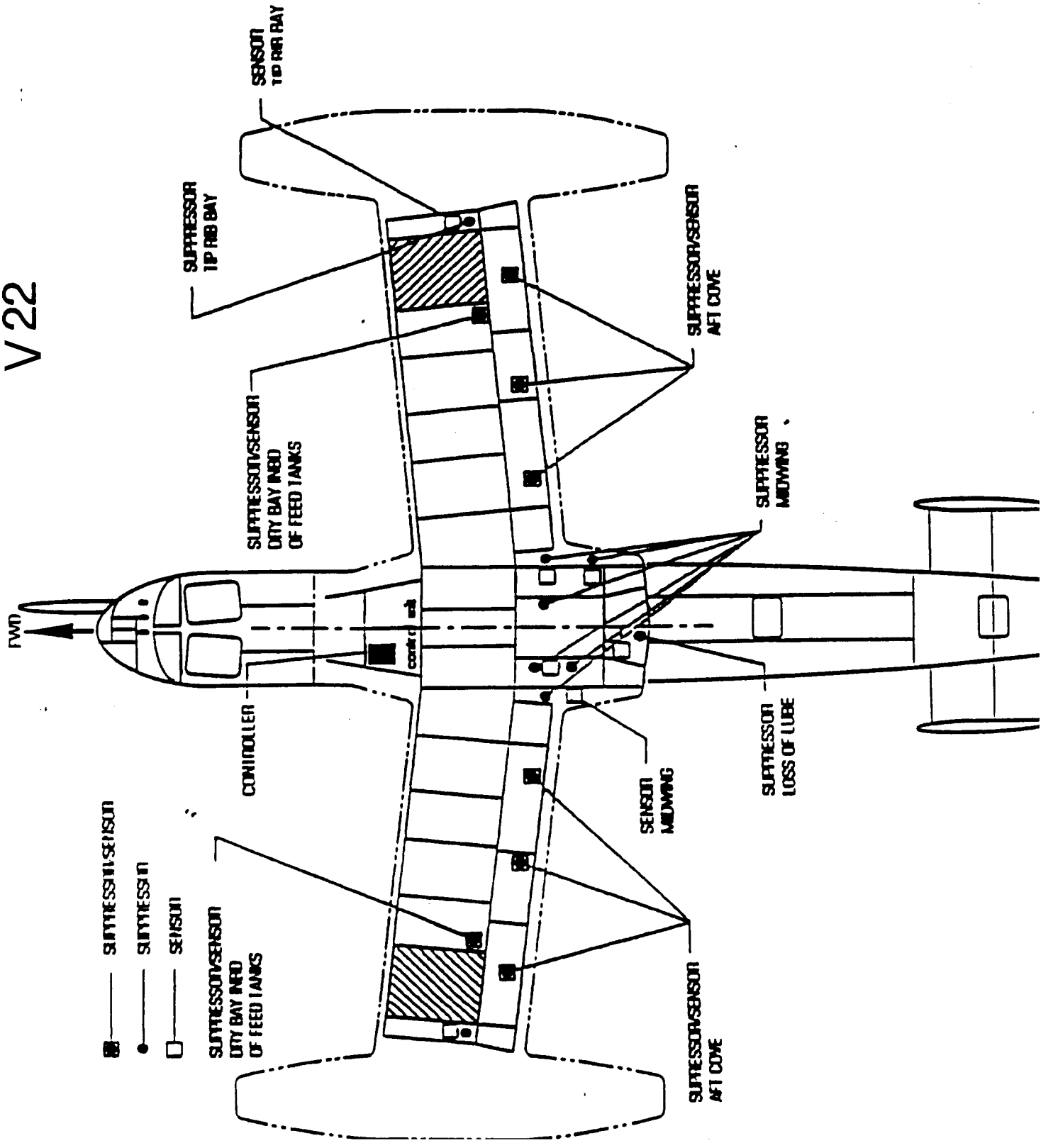
V 22
FWD
SENSOR
TIP RIB BAY
SUPPRESSOR
TIP RIB BAY
SUPPRESSOR/SENSOR
DRY BAY INBD
OF FEED TANKS
SUPPRESSOR/SENSOR
AFT COVE
SUPPRESSOR
MIDWING
CONTROLLER
SENSOR
MIDWING
SUPPRESSOR
LOSS OF LUBE
SUPPRESSOR/SENSOR
DRY BAY INBD
OF FEED TANKS
SUPPRESSOR/SENSOR
AFT COVE
SUPPRESSOR/SENSOR
SUPPRESSOR
SENSOR

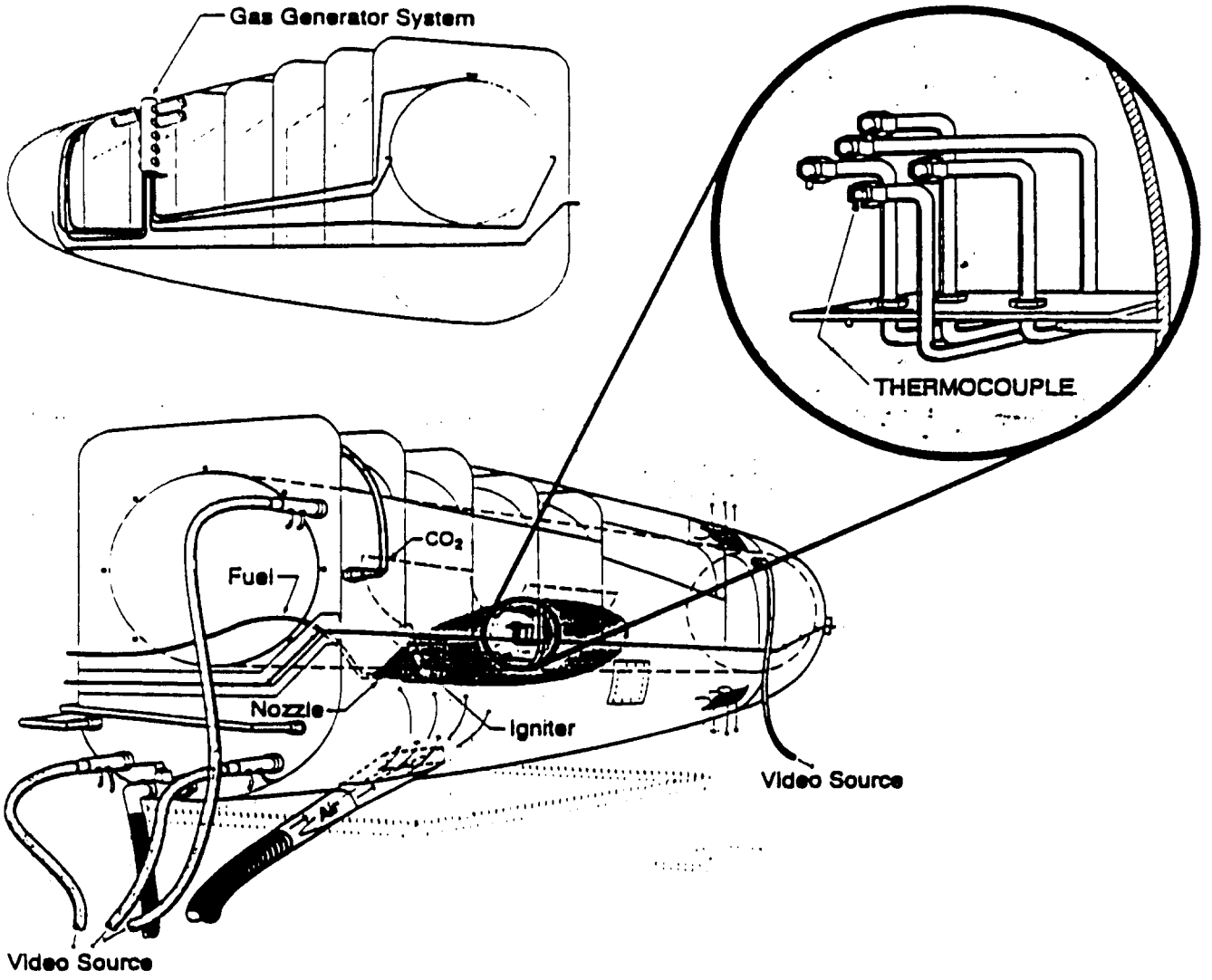
Gas Generator System
THERMOCOUPLE
CO_2
Fuel
Nozzle
Igniter
Video Source
Video Source

HALON 1301 ALTERNATIVES

INERT GAS GENERATION - TECHNICAL PLAN 2.7

- Gas generator nacelle performance testing
  - Testing conducted at China Lake
  - Actual fires
    - Ballistic and non-ballistic
    - Realistic pre-burn (30 - 60 Seconds)
    - Simulated engine nacelle structure
    - Representative fire conditions
      - Airflow
      - Fuel flow
      - Ignition source
      - Hot surface re-ignition

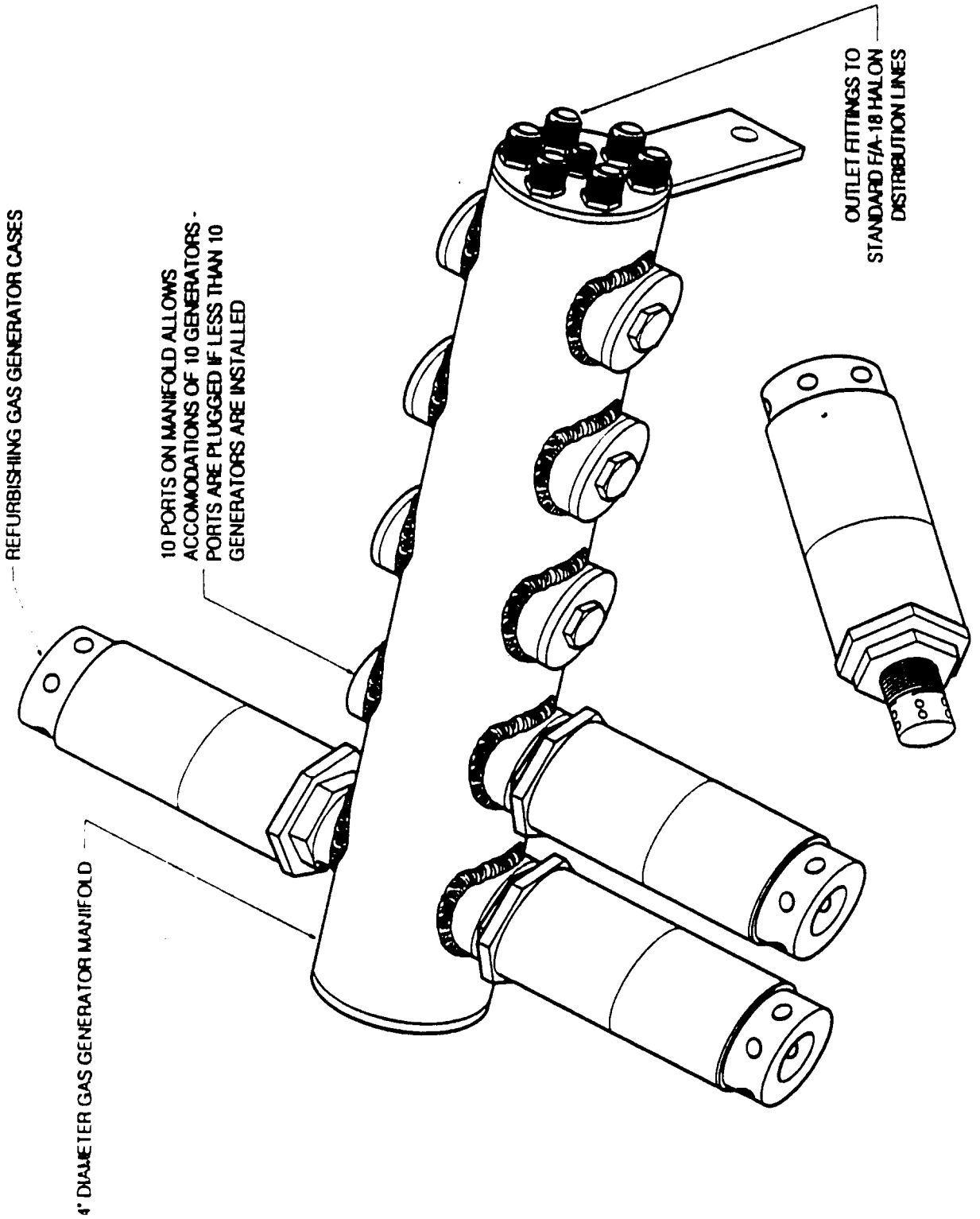

FIGURE 3. Gas Generator Manifold.

HALON 1301 ALTERNATIVES

INERT GAS GENERATION - TECHNICAL PLAN 2.7

- Nacelle performance testing (cont.)
  - Over 240 tests conducted
    - Halon characterization
    - Halon baseline
    - Gas generators
  - Test results conclude that inert gas generators are as *effective* as halon 1301 on a mass basis
    - Contingent on nacelle configuration
  - Quick-look report complete
  - Final report in draft

HALON 1301 ALTERNATIVES

INERT GAS GENERATION - TECHNICAL PLAN 2.7

- Engine nacelle technical approach (cont.)
  - Hardware modification
    - Complete the development of an efficient gas generator design
      - Single grain propellant FS01-40
    - Investigate use of more efficient propellants
      - M4150
  - Full scale testing
    - Complete full scale testing of refined engine nacelle system by 1st quarter 96

HALON 1301 ALTERNATIVES

INERT GAS GENERATION - ACCOMPLISHMENTS

- Summary
  - Accomplishments
    - V-22 and F/A-18
      - Dry bay feasibility studies complete
      - Hardware qualification efforts underway
    - F/A-18
      - Engine nacelle feasibility study complete
      - Hardware refinement in progress
  - Left to do
    - Complete engine nacelle generator development