Automated measurement of nonlinearity of optical fiber power meters

Igor Vayshenker, Shao Yang*, Xiaoyu Li, Thomas R. Scott

National Institute of Standards and Technology
Optoelectronics Division
Sources and Detectors Group
325 Broadway
Boulder, CO 80303

*Shao Yang is with Ohmeda Medical Systems, Inc., Louisville, CO 80027

ABSTRACT

We have developed a system for measuring the nonlinearity of optical power meters or detectors over a dynamic range of more than 60 dB at telecommunications wavelengths. This system uses optical fiber components and is designed to accommodate common optical power meters and optical detectors. It is based on the triplet superposition method. The system also measures the range discontinuity between neighboring power ranges or scale settings of the optical power meter. We have developed an algorithm to treat both the nonlinearity and the range discontinuity in a logically consistent manner. Measurements with this system yield correction factors for powers in all ranges. The measurement system is capable of producing results which have standard deviations as low as 0.02 %. With slight modification the system can operate over a 90 dB dynamic range at telecommunications wavelengths. This measurement system provides accurate determination of optical power meter or detector nonlinearity; the characterized detectors then can be used for such applications as absolute power and attenuation measurements.

Keywords: nonlinearity, optical power calibration, optical power meter, optical detector, optical fiber

1. INTRODUCTION

An optical power meter is the most common type of test equipment used to support optical fiber instruments. To improve the usage of the optical fiber power meter, it is often desirable to characterize its output response over a large range of power. The basic assumption for optical power measurement is that the meter output reading is directly proportional to the optical input power. This proportionality property is defined as linearity, and the departure from this direct proportionality is defined as nonlinearity. A typical optical power meter consists of a detector and a display unit which contains a current-to-voltage converter or amplifier.[1] Most photodiode detectors are linear over many orders of magnitudes; however, the electronic circuitry associated with the detector can increase the meter's nonlinearity. This can happen, for example, if the gains of the amplifier are not properly matched to the detector output.

0-8194-1909-5/95/$6.00

There are several methods for the measurement of power meter or detector nonlinearity: differential,[2] attenuation,[3] superposition.[4,5] These methods were compared using a unified mathematical expression for nonlinearity.[6,7,8] We based our system on a superposition method known as the triplet method. This method relies on the principle that for a linear detector, the sum of the detector or power meter outputs corresponding to input from two individual beams should equal the output when the two beams are combined and incident on the detector at the same time.

1.1. Definition and Basic Expressions

Optical power meter nonlinearity is defined as the relative difference between the responsivity at an arbitrary power and the responsivity at the calibration power.[9] This definition can be expressed as

$$\Delta_{NL}(P;P_c) = \frac{R(P) - R(P_c)}{R(P_c)}, \tag{1}$$

where $R(P)=V/P$ is the responsivity of the detector at optical power P incident on the detector; the subscript c indicates the calibration point, and V is the detector output, which can be electric current, voltage, or the display reading from a power meter. A function that describes the relationship between the incident optical power P and an optical meter or detector output is called the response function and is expressed as follows:

$$V = V(P). \tag{2}$$

The response function is depicted in Figure 1. We can express the nonlinearity of Equation (1) in terms of the response function:

$$\Delta_{NL}(P;P_c) = \frac{V(P)P_c}{V(P_c)P} - 1. \tag{3}$$

The inverse of the response function is called the conversion function and is depicted in Figure 2. This conversion function converts the output V to the input power P and is expressed as

$$P = P(V). \tag{4}$$

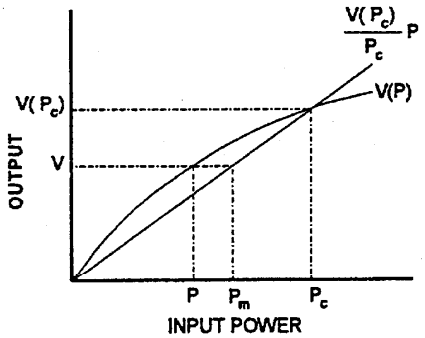

Figure 1. A response function.

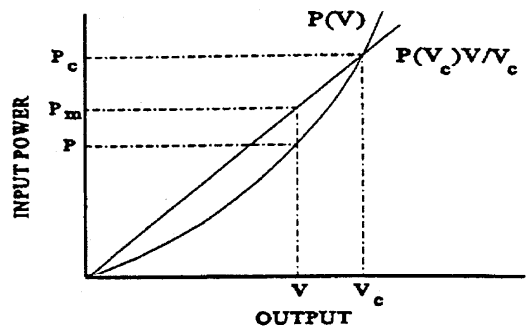

Figure 2. The conversion function.

The response function and the conversion function represent the same physical quantity in inverted variables. Consequently, the nonlinearity can equivalently be expressed and calculated in terms of the response function and input power P.

In practice, it is often more convenient to use the conversion function rather than the response function. We can define the nonlinearity in terms of the output V as

$$\Delta_{NL}(V;V_c) = \frac{P(V_c)V}{P(V)V_c} - 1. \tag{5}$$

1.2. Polynomial Expression for Conversion Function

The conversion function can be expressed as a polynomial:[3,4]

$$P(V) = \sum_{k=1}^{n} a_k V^k. \tag{6}$$

When the nonlinearity is small, a polynomial can represent the conversion function well. The output responses of the commonly used photodiodes, Si, Ge, or InGaAs, are exponential with respect to input power. However, they are often used in nearly short-circuited or reverse-biased configurations to achieve a linear response. As a result, their responses can be approximated as polynomials produced by the Taylor series expansion of the form shown in Equation (6), where the zero-order term is not included because we assume that the dark output of a power meter is always adjusted to 0 (if the dark output is not 0, we can add a zero-order term to the polynomial).

The nonlinearity Δ_{NL} of Equation (5) now becomes

$$\Delta_{NL}(V;V_c) = -\sum_{k=2}^{n} \frac{a_k}{a_1}(V^{k-1} - V_c^{k-1}). \tag{7}$$

We can simplify the polynomial expression by dividing all the coefficients a_k by the first coefficient a_1; the polynomial thus obtained is called normalized conversion function denoted by p(V) and expressed as

$$p(V) = V + \sum_{k=2}^{n} b_k V^k, \tag{8}$$

where $b_k = a_k/a_1$. The normalized conversion function p(V) can be turned to the general conversion

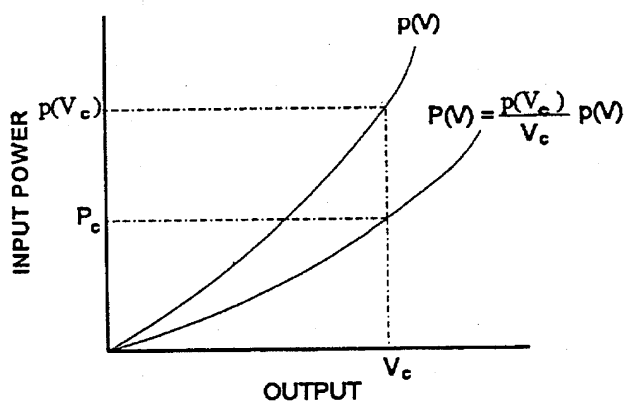

Figure 3. Calibrated and uncalibrated conversion functions.

function P(V) through the determination of the coefficient a_1 by means of calibration (see Figure 3). Once the conversion function P(V) of a power meter is known, its nonlinearity can be calculated.

In terms of the normalized polynomial, the nonlinearity can be expressed as

$$\Delta_{NL}(V;V_c) = -\sum_{k=2}^{n} b_k(V^{k-1} - V_c^{k-1}). \tag{9}$$

1.3. Optical Power Meter Ranges and Range Discontinuity

Generally, an optical power meter has a dynamic range of more than 60 dB with many meters exceeding 90 dB. To achieve these dynamic ranges, an optical power meter is designed to switch ranges (automatically or manually) during power measurements. The power ranges have their own inherent amplifications often separated by factors of 10. If the meter readings from neighboring meter ranges are the same at a constant power, then the meter does not have a range discontinuity (ideal case). We treat range discontinuity with the same procedures as we do the nonlinearity.

While calibration gives the true input power from the power meter reading (output) at the calibration point, the measurement of nonlinearity and range discontinuity, together with calibration, provides this input-output relation at any power in the whole dynamic range of the power meter. It is, therefore, convenient to express the measured nonlinearity in terms of the conversion function P=P(V), which relates the input power P to the output V, and referred to the calibration output V_c, $\Delta_{NL}(V;V_c)$.

$$a_1[c]=\frac{P_c}{V_c+\sum_{k=2}^{n} b_k[c]V_c^k}, \tag{10}$$

Calibration determines a_1 of range [c] where the calibration reference point is selected; P_c is the calibration power and V_c is the calibration output.

1.4. Correction Factor for Nonlinearity and Range Discontinuity

The true input power P is obtained from the power meter reading V by

$$P=\frac{V}{F_c \cdot CF}, \tag{11}$$

where $F_c=V_c/P_c$ is the calibration factor and CF is a correction factor due to nonlinearity and range discontinuity:

$$\begin{aligned} CF&=\frac{a_1[c]}{a_1[m]}\times\frac{1+\sum_{k=2}^{n} b_k[c]V_c^{k-1}}{1+\sum_{k=2}^{n} b_k[m]V^{k-1}} \\ &=\frac{a_1[c]}{a_1[m]}[1+\Delta_{NL}(V;0)-\Delta_{NL}(V_c;0)], \end{aligned} \tag{12}$$

where m is a range of an optical power meter. Each range of a power meter has its own correction factor.

2. MEASUREMENT SYSTEM

The NIST optical power nonlinearity measurement system is depicted in Figure 4. We use a high-power single-mode fiber-pigtailed laser whose power is stabilized; the laser is temperature controlled. The laser is connected to an in-line optical isolator to avoid any feedback from the system components. An external optical attenuator with a dynamic range of 60 dB is used to provide variable optical power. The output of the attenuator is divided into two approximately equal parts by introducing a 3-dB fiber splitter; one of the splitter arms has an additional length of fiber (100 m) to avoid interference. A computer-controlled shutter is inserted into a collimated beam in each arm. Both signals are combined in a 3-dB fiber coupler which has a FC/APC connector at the output to decrease reflection effects. We use single-mode fiber components such as splitters and couplers. The data are acquired using the triplet superposition method. The measurements were performed by taking sets of three power readings from the test meter: (1) when the shutter 1 is open and shutter 2 is closed, (2) when the shutter 1 is closed and shutter 2 is open, and (3) when both shutters are open. This sequence is then repeated at different powers. The optical power meter is linear when the sum of the two individual power readings is equal to the combined power reading.

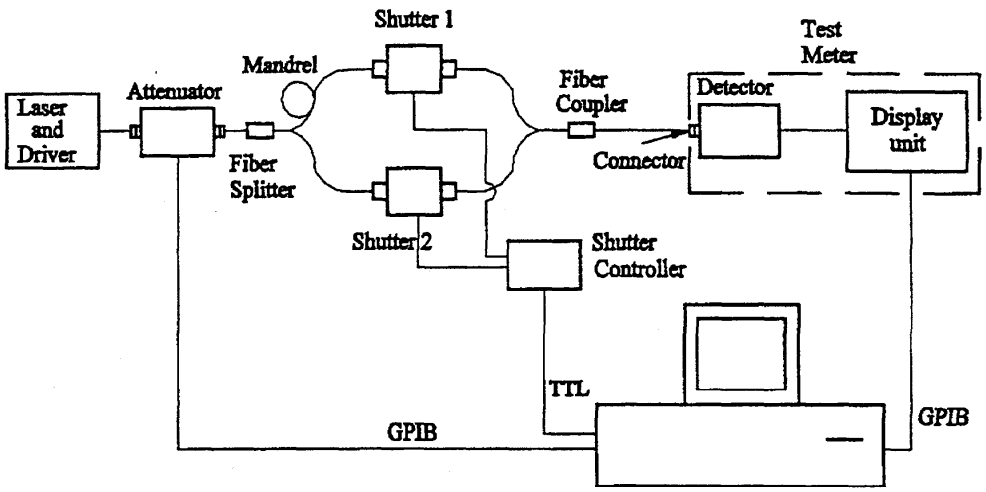

Figure 4. The measurement system.

To measure the range discontinuity (offsets between range or scale settings), readings are taken at the lower power end of each range and compared to the readings on the higher power region of the next lower range (if available) at a constant power.

3. RESULTS

Using the system shown in Figure 4, the nonlinearity of an optical power meter is characterized over the power range of 1.5 nW-3.5 mW at a wavelength of 1285 nm. Sample results obtained on a NIST power meter are presented in Table I and shown graphically in Figure 5. The correction factors result from meter nonlinearity within each range, combined with the range discontinuity. Each correction value listed in the table is the average of six correction factors found throughout that range.

Table I. Nonlinearity Correction Factors

Meter Range	Power Used	Correction Factor	Standard Deviation (%)
10 dBm	1.5-3.5 mW	1.007	0.30
0 dBm	0.15-2 mW	0.9995	0.06
-10 dBm	15-200 μW	1.000	0.01
-20 dBm	1.5-20 μW	0.9993	0.02
-30 dBm	0.15-2 μW	1.003	0.04
-40 dBm	15-200 nW	1.002	0.06
-50 dBm	1.5-20 nW	1.003	0.06

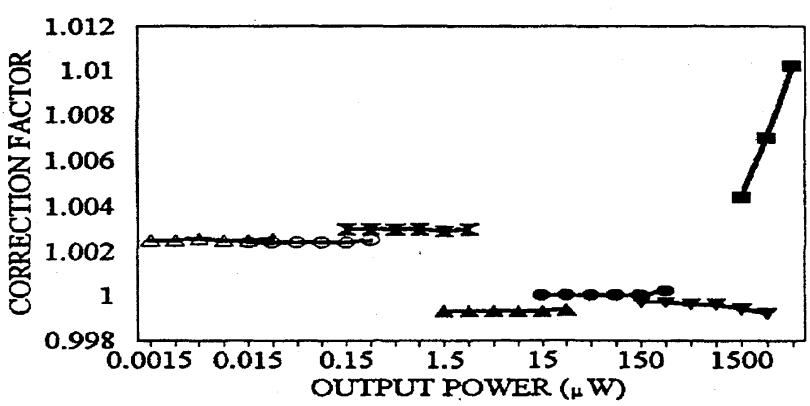

Figure 5. Correction factor vs. output power.

To correct the nonlinearity and range discontinuity, power meter readings should by divided by the appropriate correction factors. The standard deviation was calculated using three data runs. We used a commercial attenuator with 60 dB dynamic range; by introducing an attenuator with 90 dB dynamic range, the system can operate over a 90 dB dynamic range at telecommunications wavelengths.

4. ACKNOWLEDGMENTS

This work is supported by the Calibration Coordination Group (CCG) of the Department of Defense; the lead agency for this project is the U.S. Naval Warfare Assessment Division, Corona, California. Robert Gallawa and Steven Mechels of NIST reviewed the manuscript, Matt Young and Robert Peterson of NIST provided useful suggestions for preparation of the manuscript; the authors thank them for their valuable comments.

5. REFERENCES

1. B. Maisenbacher and W. Reichert, "A Lightwave Multimeter for Basic Fiber Optic Measurements," Hewlett-Packard Journal, February 1991.

2. R.G. Frehlich, "Estimation of the nonlinearity of a photodetector," Appl. Opt. 31, 5926-5929(1992).

3. L. Coslovi and F. Righini, "Fast determination of the nonlinearity of photodetectors," Appl. Opt. 19, 3200-3203 (1980).

4. C.L. Sanders, "Accurate measurements of and corrections for nonlinearities in radiometers," J. Res. Nat. Bur. Stand. (U.S.) 76A, 437-453 (1972).

5. R.D. Sanders and J.B. Schumaker, "Automated radiometric linearity tester," Appl. Opt. 23, 3504-3506 (1984).

6. S. Yang, I. Vayshenker, X. Li, and T.R. Scott, "Accurate measurement of optical detector nonlinearity," Proc. Natl. Conf. Standards Laboratories Workshop & Symposium, Session 5A, 353-362, July-August, 1994.

7. S. Yang, I. Vayshenker, X. Li, and T.R. Scott, "Optical detector nonlinearity: a comparison of five methods," Proc. Conf. Precision Electromagnetic Measurements, 455-456, June-July 1994.

8. S. Yang, I. Vayshenker, X. Li, M. Zander and T.R. Scott, "Optical detector nonlinearity: Simulation," Natl. Inst. of Stand. Technol. Technical Note 1376, May 19, 1995.

9. "Calibration of Fiber-Optic Power Meters,"Draft International Standard, IEC TC 86, June 25,1992.