ITI TranscenData

YOUR CENTRAL SOURCE FOR DATA EXCHANGE

NIST MBE PMI Validation & Conformance Testing
FTC Model Verification Results
June 2015

Doug Cheney
CAD Validation Specialist
ITI TranscenData
Doug.Cheney@TranscenData.com

FOCUS INNOVATION CHALLENGE SOLUTION PARTNERSHIP INTEGRATION

www.TranscenData.com

Any mention of commercial products is for information only; it does not imply recommendation or endorsement by NIST.

NIST is Supporting the Discrete Part Manufacturing Industry for Long-term Growth

"Our strategic direction is the Model-Based Enterprise (MBE)"

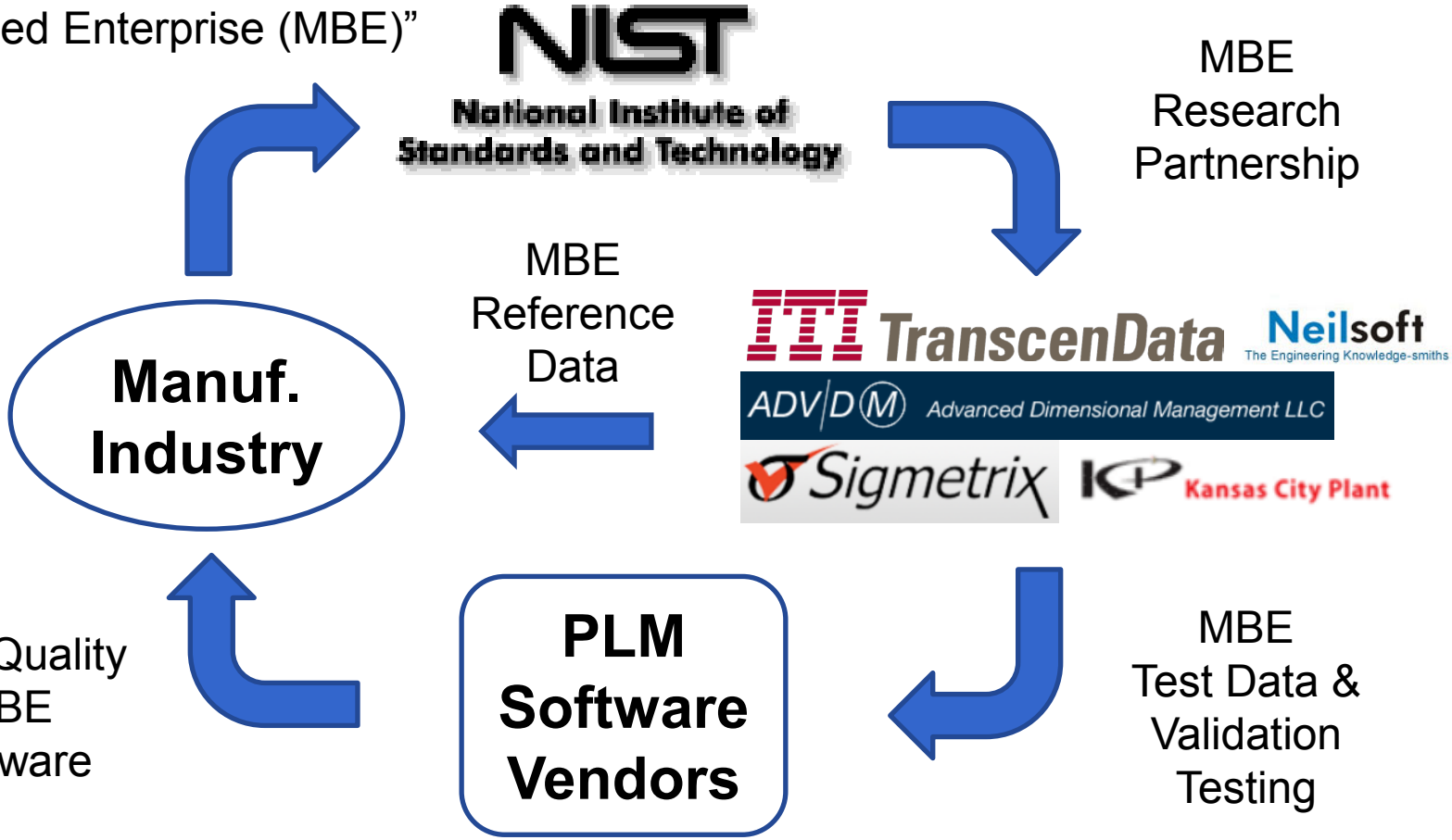

NIST MBE PMI Validation and Conformance Testing Program Objectives

Develop **test cases**,
test models and
software **algorithms** sufficient to
measure conformance of CAD systems to
American Society of Mechanical Engineers (ASME)
standards for Product and Manufacturing Information
(PMI).

ASME Y14.5	Dimensioning and Tolerancing
ASME Y14.41	Digital Product Data Definition Practices

Web site: http://go.usa.gov/mGVm

Example Fully-toleranced Test Case (FTC) and Test Models

Test Case

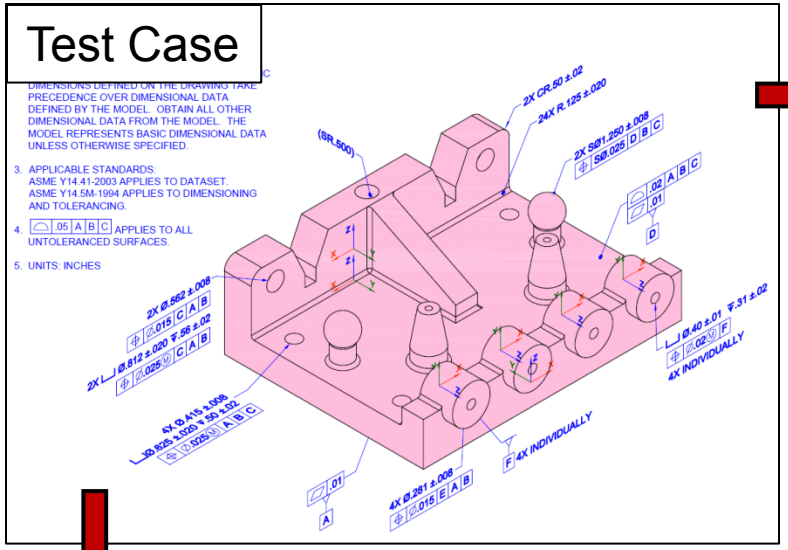

CATIA V5 R24 Model

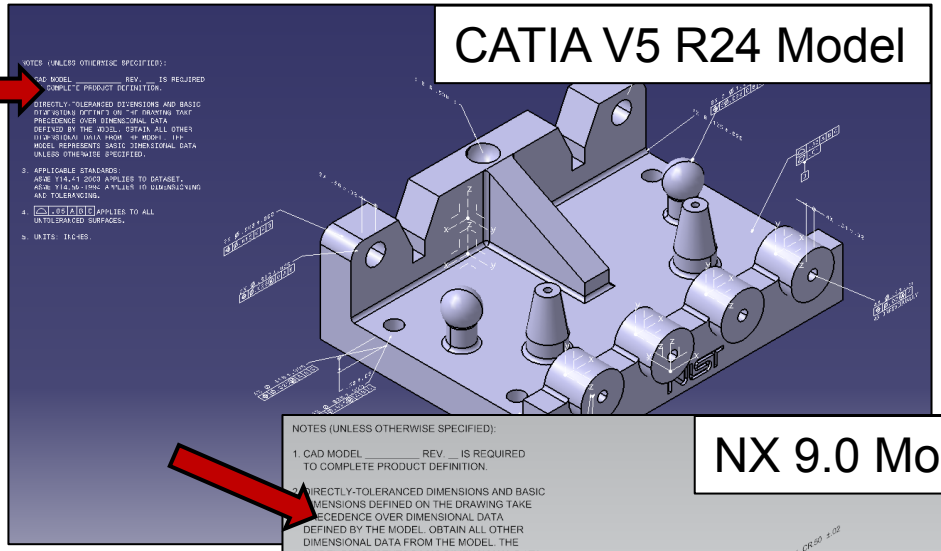

NX 9.0 Model

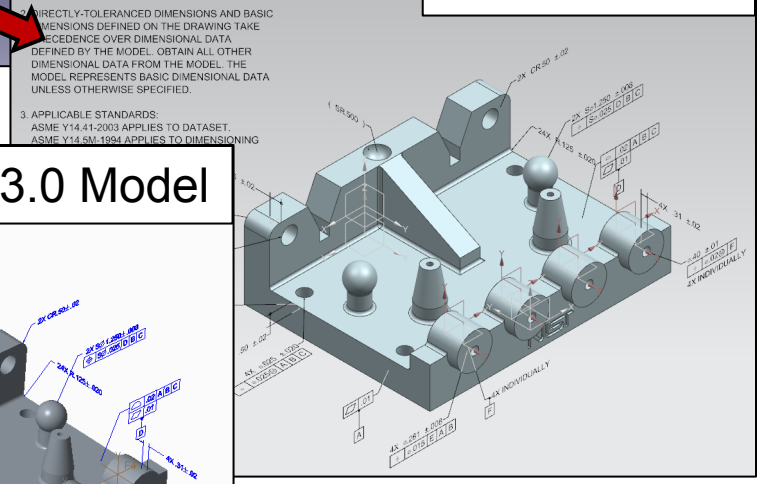

SolidWorks 2015 Model

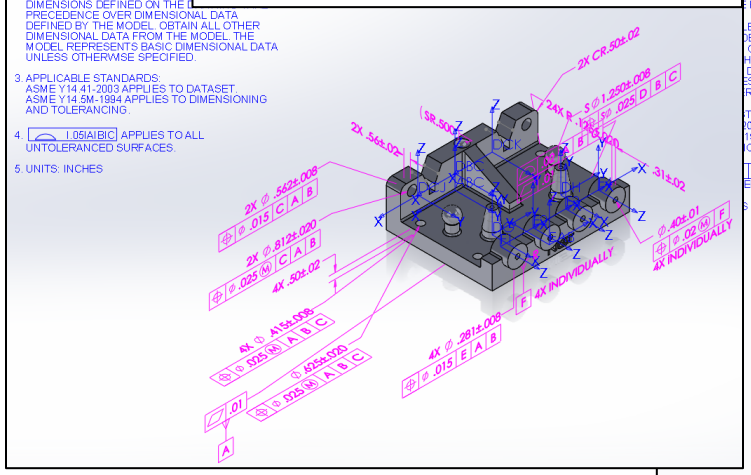

Creo 3.0 Model

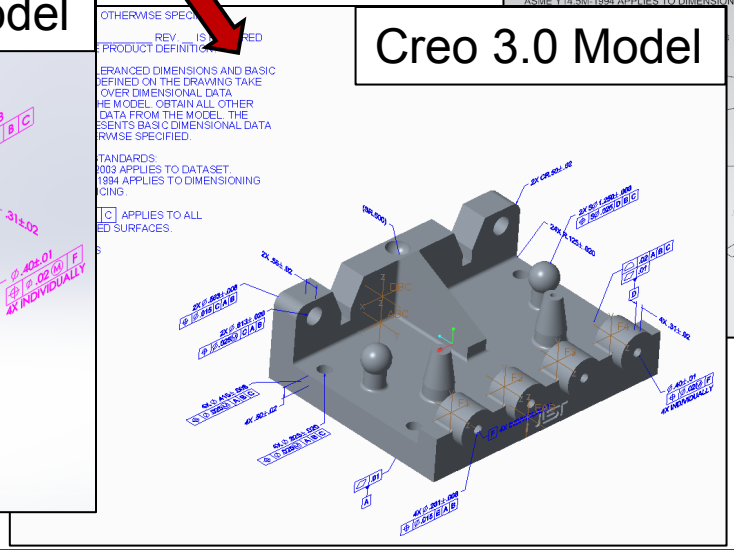

TranscenData

Conformance Testing Terminology

PMI element: An annotation, coordinate system, supplemental geometry entity, or saved view

Presentation: What the human user sees (Visual consumption)

Representation: What the downstream software receives (Automated consumption)

Verification: How well each PMI element is modeled (CAD system capability)

Validation: How well each PMI element is translated (Translator capability)

ITI TranscenData

Fully-toleranced vs. Combined Test Cases

- Combined Test Case (CTC)
  - Combination of representative PMI constructs
  - Not intended to be realistic
- Fully-toleranced Test Case (FTC)
  - All geometric features are fully-toleranced in the context of the GD&T
  - Each tolerancing feature is adequately controlled and constrained by tolerances that comply with the applicable dimensioning, tolerancing, and modeling standards
  - Includes as many annotation types and constructs as needed to fully control and constrain each geometric feature relative to one or more datum reference frames
  - Accounts for the constraint requirements on the form, size, orientation, and location of features and hierarchical interrelationships between their tolerance zones and datum reference frames
  - Not intended to be functional

ITI TranscenData

Verification Testing Methodology

- The representation and presentation of each PMI element is compared to the test case specification
- Any differences, which cannot be resolved with an alternate modeling technique, are categorized as a:
  - Representation Limitation
  - Presentation Limitation
  - Style Difference (representation and presentation are correct but different between systems)
- Each limitation/difference is grouped by characteristic and type
- An example of each characteristic-type combination is documented in this presentation
- The following slide indexes (underlined) these examples

ITI TranscenData

Verification Characteristics (and index to examples)

Representation Limitation

- Annotation structure
- Annotation parameters
- Annotation geometry
- Coordinate system structure
- Coordinate system parameters
- Supplemental geometry structure
- Supplemental geometry parameters

Style Difference

- Annotation structure
- Annotation geometry
- Supplemental geometry structure
- Product geometry parameters

If a characteristic is not underlined, no limitations were found in this dataset.

Presentation Limitation

- Annotation visibility
- Annotation color
- Annotation name
- Annotation layout
- Annotation location
- Annotation orientation
- Annotation lines
- Annotation text
- Coordinate system visibility
- Coordinate system color
- Coordinate system name
- Coordinate system text
- Supplemental geometry visibility
- Supplemental geometry color
- Saved view structure
- Saved view name
- Saved view frustum

PMI Constructs Test Case Drawings and Models

TranscenData

Verification Capability Measurement Methodology

- Each PMI element limitation/difference is counted by category, characteristic, and type
- The subtotal per characteristic is divided by the subtotal of PMI elements to which it applies
  - Multiple limitations/differences of the same characteristic for the same PMI element are only counted once
- The total per category is divided by the total PMI elements
  - Multiple limitations/differences of the same category for the same PMI element are only counted once, with representation > presentation
- The following slides show these statistics for this dataset
- The name of each CAD system is generalized according to the overall results (“CAD A” better than “CAD B”…)

ITI TranscenData

Representation Limitation Counts by Characteristic and Type (across all systems)

Representation Limitations	**133**
Annotation structure	**38**
FCF extension lines defined as separate DIM	18
FCF missing composite layout	4
FCF not defined	1
FCF projected tolerance zone defined as separate DIM	2
FCF text defined as separate note	12
FCF text duplicated	1
Annotation parameters	**51**
Chamfer DIM width not defined	1
DIM conic surfaces defined with encoded text	4
DIM controlled radius defined with encoded text	2
DIM missing dual dimension tolerance	1
DIM not defined as reference DIM	3
DIM origin not defined	4
DIM radius defined with encoded text	1
DIM slot radius defined with encoded text	6
DIM spherical diameter defined with encoded text	3
DIM spherical radius defined with encoded text	4
DIM tapered center defined with encoded text	4
FCF between-basis defined with encoded text	4
FCF diameter symbol not specified	6
FCF dual dimension defined with encoded text	2
FCF free state defined with encoded text	1
FCF missing all-around designation	2
FCF missing tangent plane modifier	1
FCF spherical diameter defined with encoded text	2

Annotation geometry	**44**
DFS not associated with complete set of faces	5
DIM associated with incorrect face	1
DIM not associated with complete set of faces	5
DIM not associated with edge	2
DIM not associated with face	2
DTS not associated with SG curve	6
FCF associated with incorrect face	1
FCF extension line DIM not associated with correct face	3
FCF not associated with complete set of faces	2
FCF not associated with SG curve	17

Abbrev	Definition
AN	Annotation
CS	Coordinate system
DFS	Datum feature symbol
DIM	Dimension
DRF	Datum reference frame
DTS	Datum target symbol
FCF	Feature control frame
PG	Product geometry
SG	Supplemental geometry
VW	View

ITI TranscenData

Style Difference Counts by Characteristic and Type (across all systems)

Style Differences	**36**
Annotation structure	**12**
DTS requires DFS to be defined	12
Annotation geometry	**20**
DFS edge association is extraneous	2
DIM edge association is extraneous	8
FCF edge association is extraneous	10
Supplemental geometry structure	**4**
FCF limited area is non-solid surface on solid face	3
FCF limited area is subdivided solid face	1

Abbrev	Definition
AN	Annotation
CS	Coordinate system
DFS	Datum feature symbol
DIM	Dimension
DRF	Datum reference frame
DTS	Datum target symbol
FCF	Feature control frame
PG	Product geometry
SG	Supplemental geometry
VW	View

ITI TranscenData

Presentation Limitation Counts by Characteristic and Type (across all systems)

Presentation Limitations	**198**
Annotation visibility	**4**
DFS is extraneous when DTS is defined	4
Annotation layout	**43**
Counterbore DIM defined as two separate DIM's	12
Countersink DIM defined as two separate DIM's	3
DIM dual dimension bracket size very small	1
DIM dual dimension position is incorrect	1
DIM not stacked correctly	4
DIM text misaligned	2
FCF defined separate from general note text	2
FCF instance count not in front	2
FCF modifiers reversed	1
FCF stack order reversed	2
Hole DIM defined as two separate DIM's	8
Slot DIM defined as two separate DIMs	5
Annotation location	**19**
DFS not attached to FCF	17
FCF not attached to DIM	2
Annotation orientation	**8**
DIM view plane rotated	6
FCF view plane rotated	2
Annotation lines	**15**
DFS missing extension line	5
DIM leader line is extraneous	1
FCF divider line cuts through symbol	1
FCF leader line passes through FCF	1
FCF missing dual leader lines	4
FCF radial extension lines defined as SG curves	3

Annotation text	**39**
DFS text is extraneous	6
DIM has extraneous space	7
DIM missing pattern text	2
DIM missing zero tolerance limit negative sign	2
DIM nominal value rounded incorrectly	4
DIM pattern text is extraneous	1
DIM pattern text is incorrect	1
FCF extension line DIM text is extraneous	6
FCF missing projected tolerance zone length	2
FCF pattern text is extraneous	7
FCF pattern text is incorrect	1
Coordinate system visibility	**19**
CS visible in wrong view	19
Supplemental geometry visibility	**29**
SG curve visible in wrong view	16
SG point visible in wrong view	13
Saved view structure	**11**
View cannot contain annotations on different planes	11
Saved view frustum	**11**
View camera position not defined	11

Abbrev	Definition
AN	Annotation
CS	Coordinate system
DFS	Datum feature symbol
DIM	Dimension
DRF	Datum reference frame
DTS	Datum target symbol
FCF	Feature control frame
PG	Product geometry
SG	Supplemental geometry
VW	View

TranscenData

Verification Percentages by Characteristic and System

Representation Limitations	Element Count	CAD A	CAD B	CAD C	CAD D
Annotation structure	182	97%	**89%**	97%	99%
Annotation parameters	182	96%	92%	95%	91%
Annotation geometry	182	97%	95%	100%	**86%**
Coordinate system parameters	33	100%	100%	100%	100%
Supplemental geometry structure	16	100%	100%	100%	100%
Supplemental geometry parameters	16	100%	100%	100%	100%

PMI Element	Element Count per Test Case 6	8	9	Total
Annotation	66	52	64	182
Coordinate System	15	9	9	33
Supplemental Geometry Entity	6	2	8	16
Saved View	3	4	4	11
Total:	90	67	85	**242**

Presentation Limitations	Element Count	CAD A	CAD B	CAD C	CAD D
Annotation visibility	182	100%	100%	100%	98%
Annotation color	182	100%	100%	100%	100%
Annotation name	182	100%	100%	100%	100%
Annotation layout	182	96%	91%	96%	94%
Annotation location	182	100%	99%	92%	98%
Annotation orientation	182	99%	98%	99%	99%
Annotation lines	182	99%	97%	98%	97%
Annotation text	182	96%	91%	99%	92%
Coordinate system visibility	33	100%	100%	100%	**42%**
Coordinate system color	33	100%	100%	100%	100%
Coordinate system name	33	100%	100%	100%	100%
Coordinate system text	33	100%	100%	100%	100%
Supplemental geometry visibility	16	100%	100%	100%	**0%**
Supplemental geometry color	16	100%	100%	100%	100%
Saved view structure	11	100%	100%	100%	**0%**
Saved view name	11	100%	100%	100%	100%
Saved view frustum	11	100%	100%	100%	**0%**

Each percentage is calculated using this ratio:

$$\frac{\text{(Element count – Limitation count)}}{\text{Element count}}$$

The limitation count excludes limitations with the same characteristic (but different types) on the same PMI element.

Percentages less than 90% are shown in **bold** font.

TranscenData

Verification Percentages by System

	CAD A	CAD B	CAD C	CAD D
No Limitations	89%	69%	82%	52%
Presentation Limitations only	3%	12%	12%	30%
Representation Limitations	8%	19%	7%	18%
Representation Level	92%	81%	93%	82%

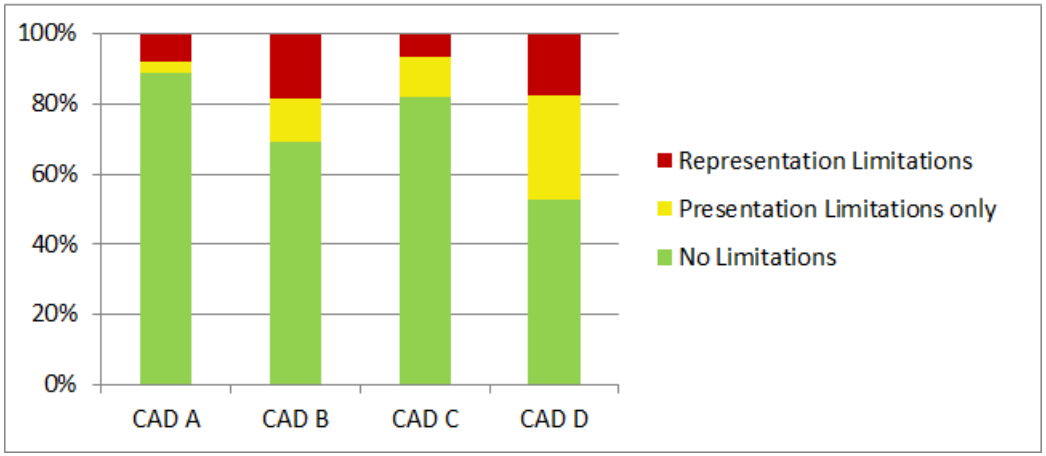

"No Limitations" measures the capability for both automated and visual consumption and is calculated as 100% less the other limitation percentages.

"Representation Level" measures the capability for automated consumption only and is calculated as 100% less the representation limitations percentage.

The presentation and representation limitation percentages are calculated using this ratio:

$$\frac{\text{Limitation count}}{\text{Element count}}$$

The "Presentation Limitation Only" count excludes presentation limitations that overlap with representation limitations on the same PMI element.

The "Element Count" includes all annotations, coordinate systems, supplemental geometry entities, and saved views specified in the test cases.

Verification Summary

- The limitation characteristics and types are different for each system.
- All 4 CAD systems are able to **represent** more than 80% of the annotations, supplemental geometry entities, and saved views in this verification test.
- The systems vary significantly in their ability to visually **present** the PMI elements as specified in the test cases.
- None of the systems are able to present the complex dimensions (counterbore, countersink, hole, slot) as specified in the test case while representing the correct geometry associations for each component of the dimension.

ITI TranscenData

Verification Characteristics (and index to examples)

Representation Limitation

- Annotation structure
- Annotation parameters
- Annotation geometry
- Coordinate system structure
- Coordinate system parameters
- Supplemental geometry structure
- Supplemental geometry parameters

Style Difference

- Annotation structure
- Annotation geometry
- Supplemental geometry structure
- Product geometry parameters

If a characteristic is not underlined, no limitations were found in this dataset.

Presentation Limitation

- Annotation visibility
- Annotation color
- Annotation name
- Annotation layout
- Annotation location
- Annotation orientation
- Annotation lines
- Annotation text
- Coordinate system visibility
- Coordinate system color
- Coordinate system name
- Coordinate system text
- Supplemental geometry visibility
- Supplemental geometry color
- Saved view structure
- Saved view name
- Saved view frustum

PMI Constructs Test Case Drawings and Models

TranscenData

CAD System Representation Limitations for Annotation Structure

Return to Index

Annotation Structure: FCF extension lines defined as separate DIM

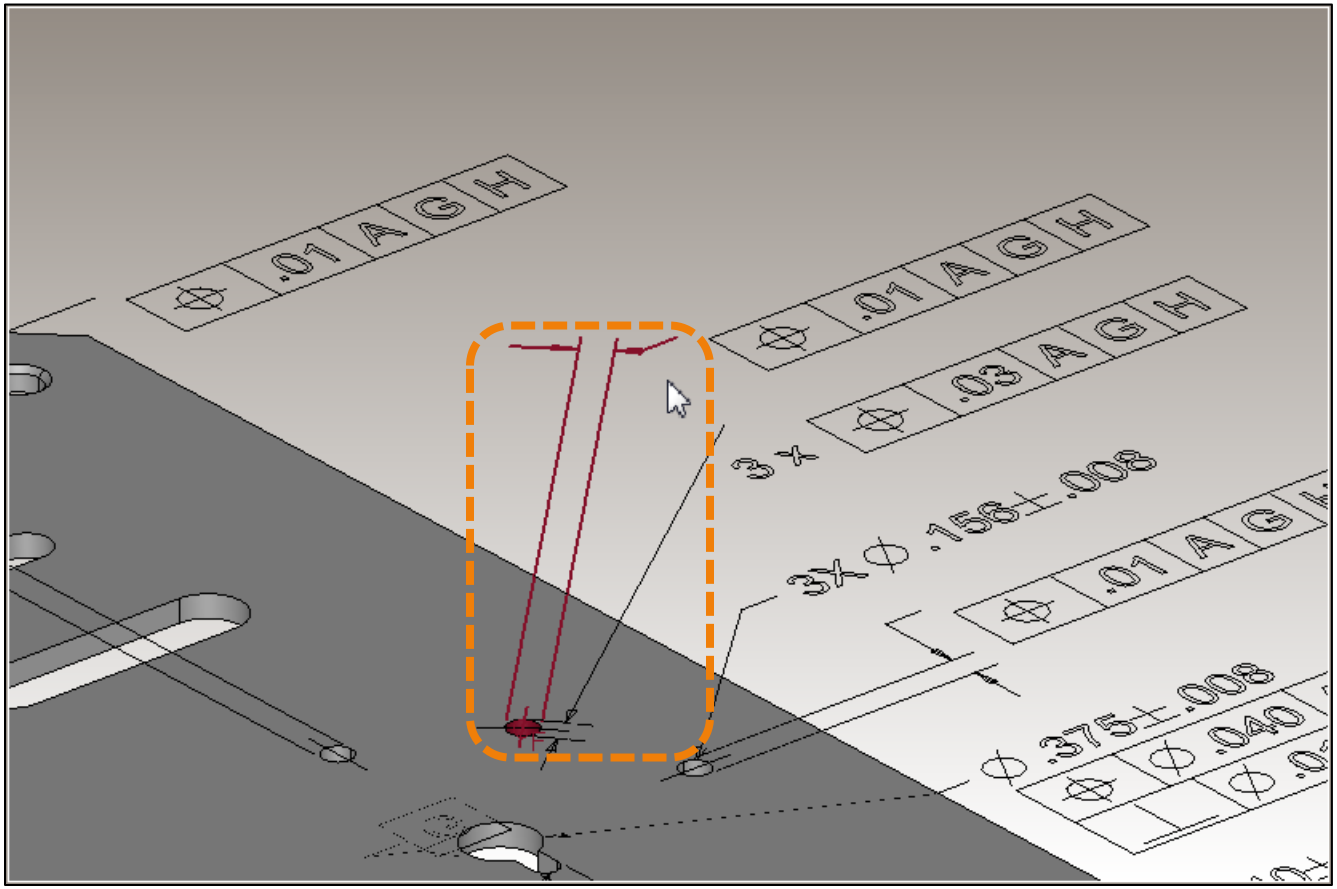

These extension lines are defined as a separate dimension that has no displayed value.

Return to Index

TranscenData

Annotation Structure: FCF missing composite layout

Test Case

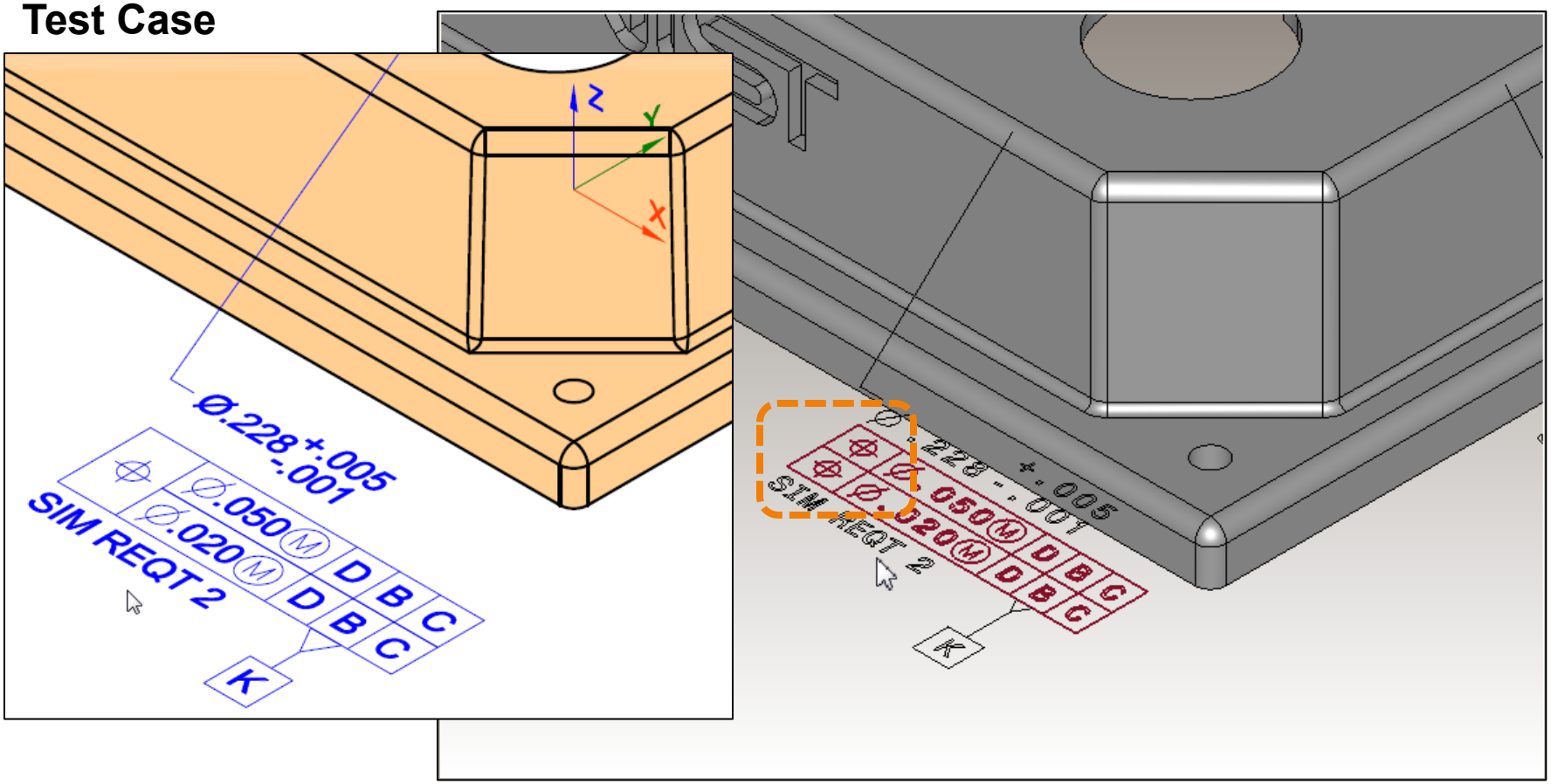

This feature control frame lacks the specified composite layout.

Return to Index

TranscenData

Annotation Structure: FCF not defined

Test Case

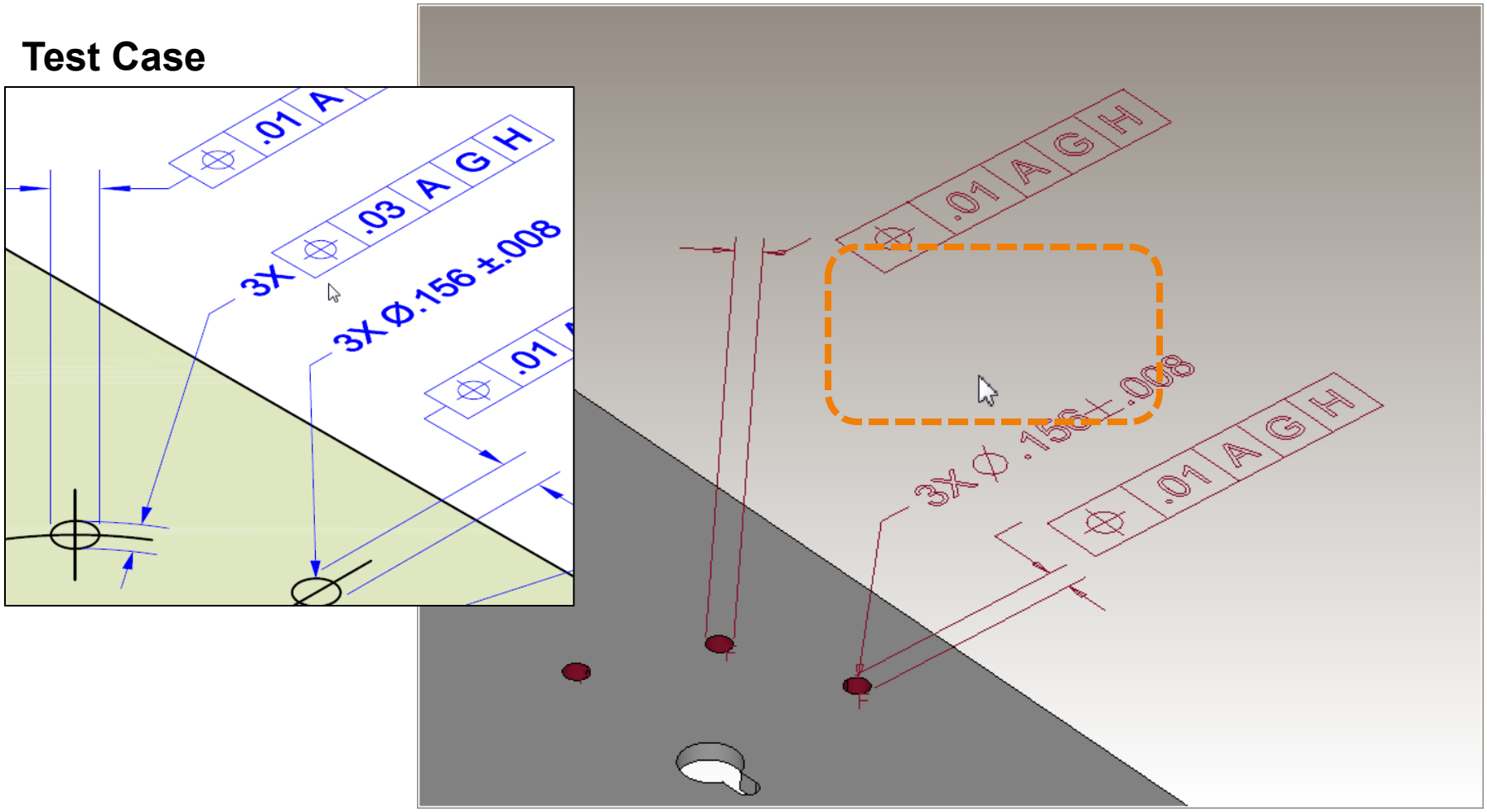

This specified feature control frame is defined.

Return to Index

ITI TranscenData

Annotation Structure: FCF projected tolerance zone defined as separate DIM

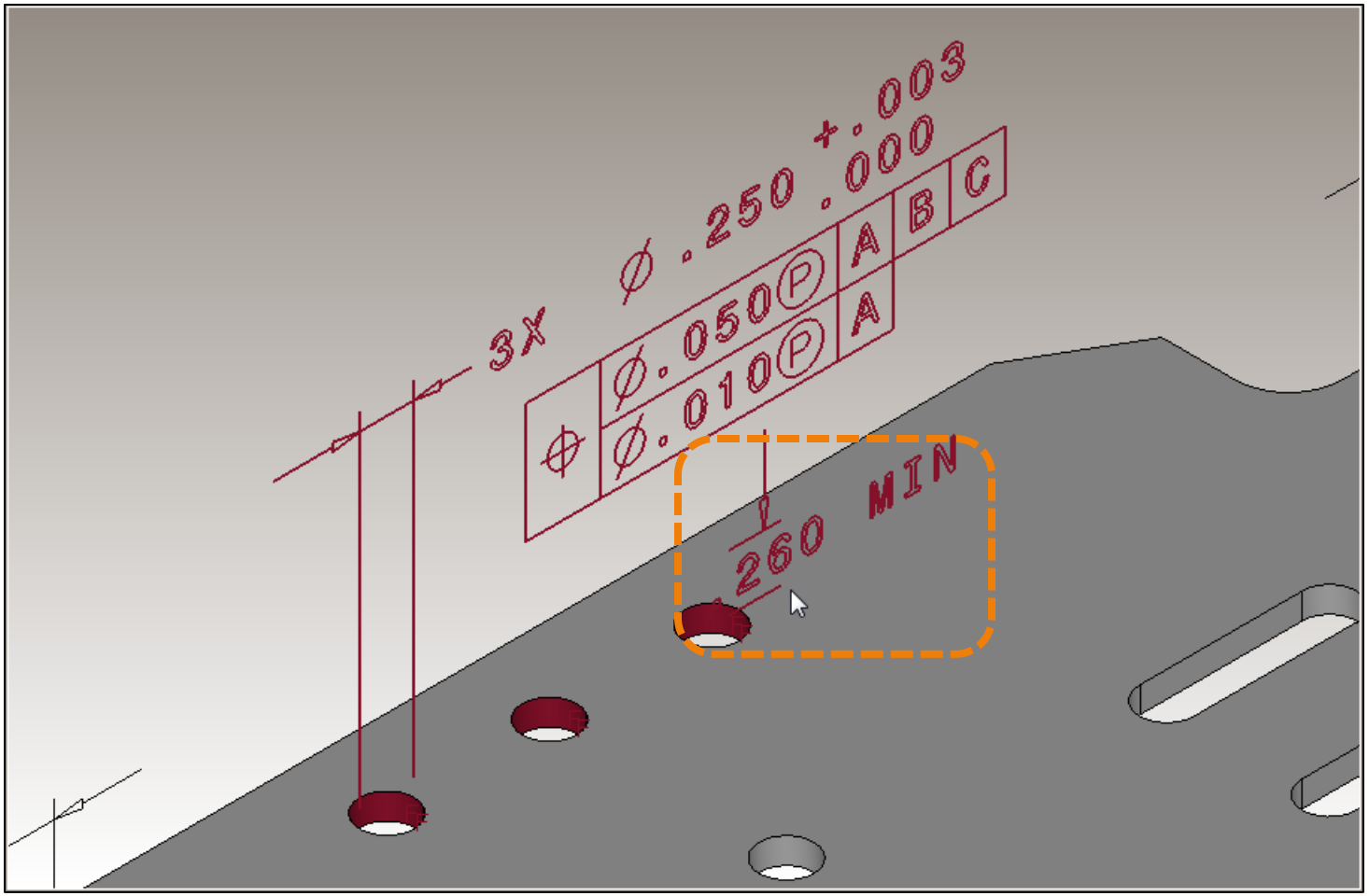

The length of the projected tolerance zone for this feature control frame is defined as a separate dimension.

Return to Index

TranscenData

Annotation Structure: FCF text defined as separate note

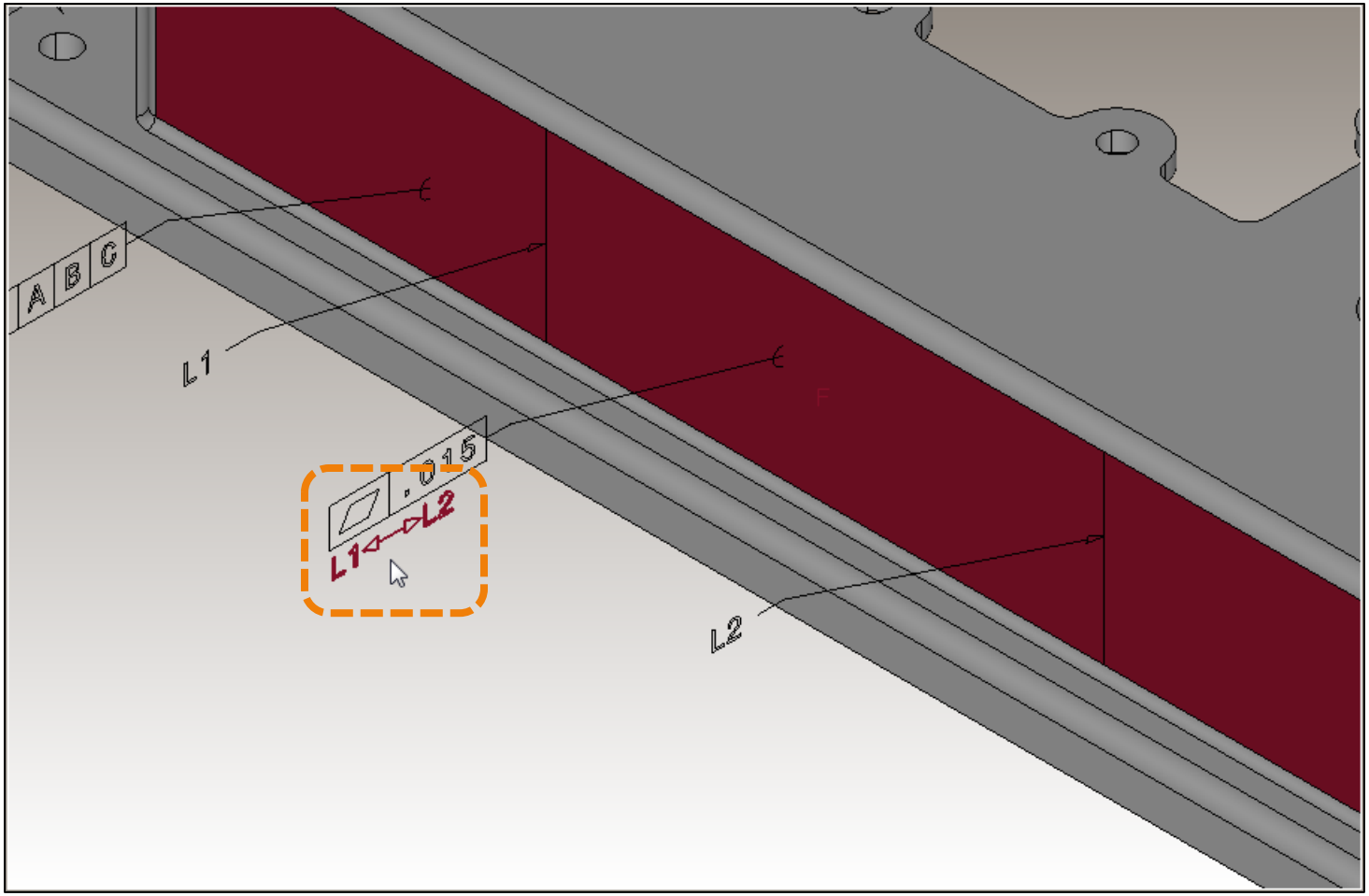

The text which defines the between-basis for this feature control frame is defined as a separate note annotation.

Return to Index

TranscenData

Annotation Structure: FCF text duplicated

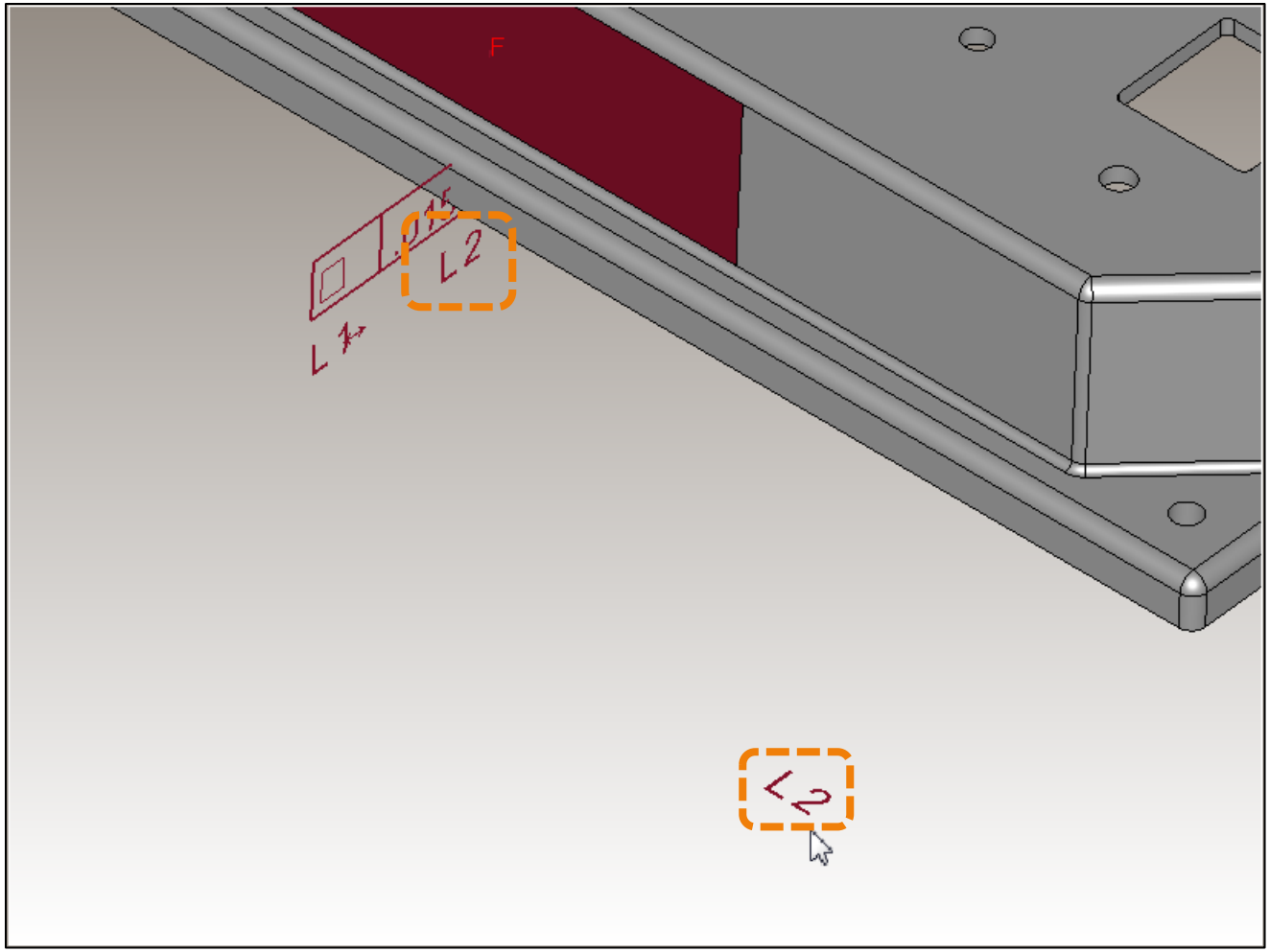

This annotation text is defined twice in the model.

Return to Index

TranscenData

CAD System Representation Limitations for Annotation Parameters

Return to Index

Annotation Parameters: Chamfer DIM width not defined

Test Case

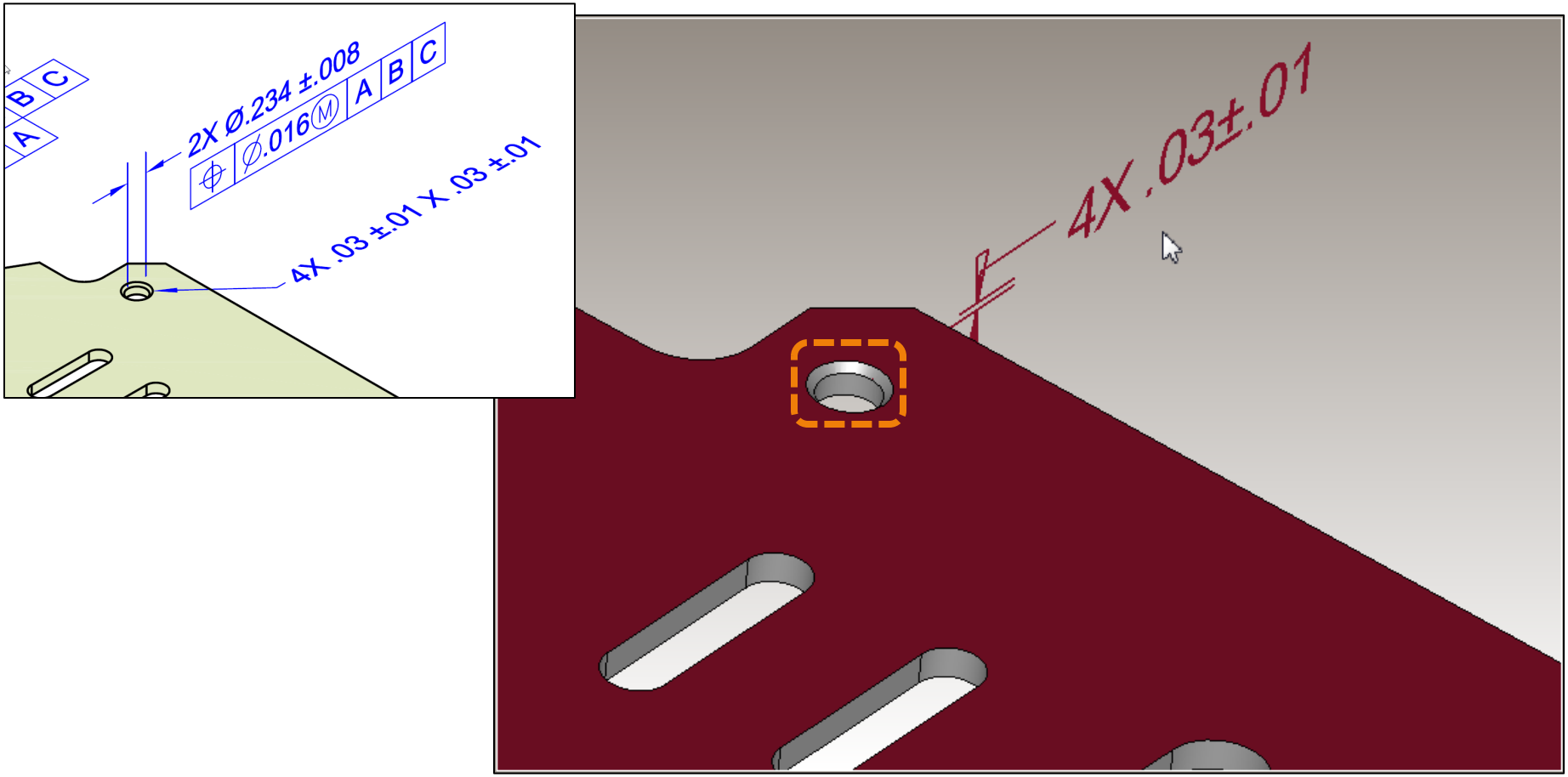

This chamfer is missing the dimension that defines its width.

Return to Index

TranscenData

Annotation Parameters: DIM conic surfaces defined with encoded text

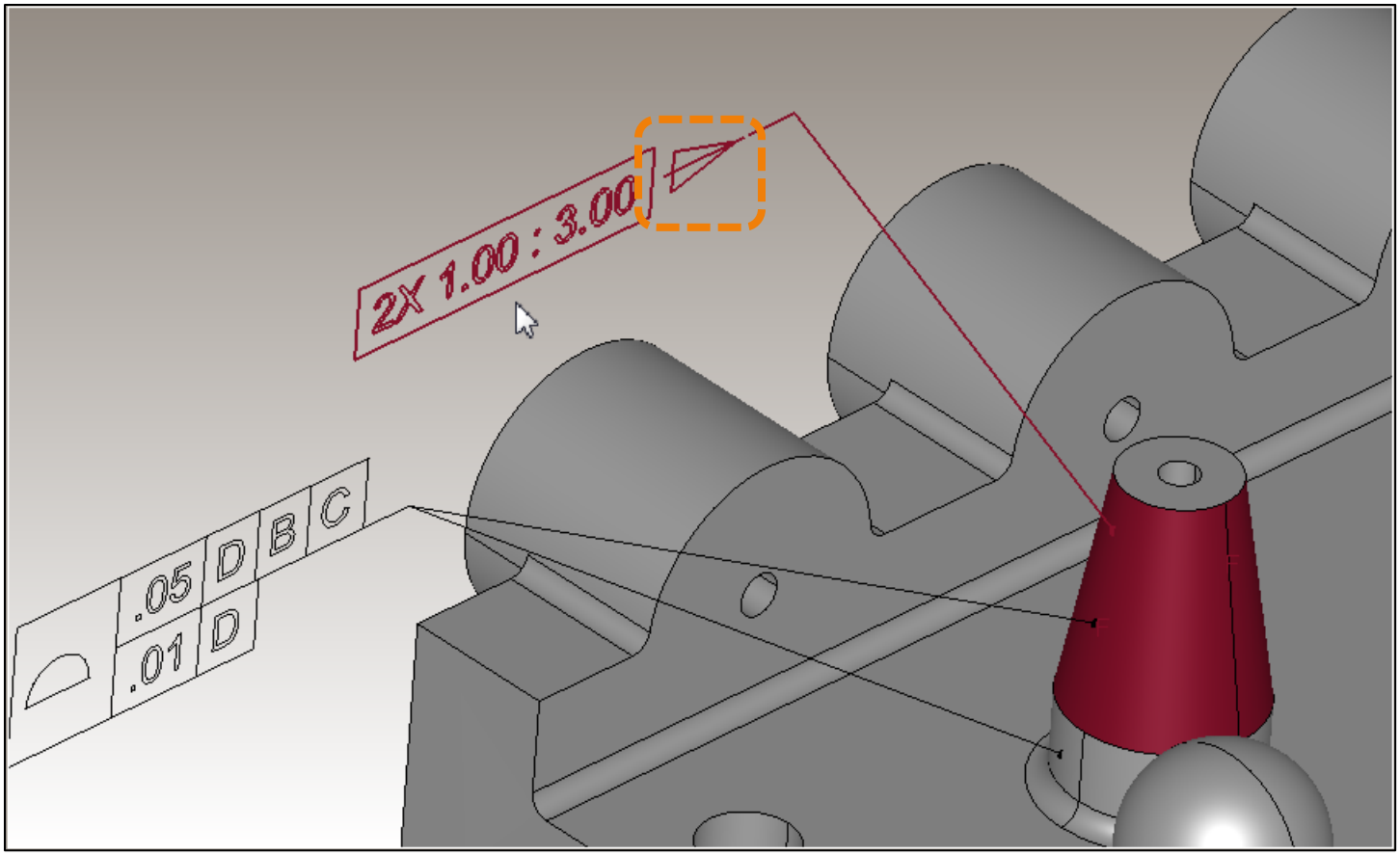

The conic surfaces portion of this dimension is defined using encoded text.

Return to Index

Annotation Parameters: DIM controlled radius defined with encoded text

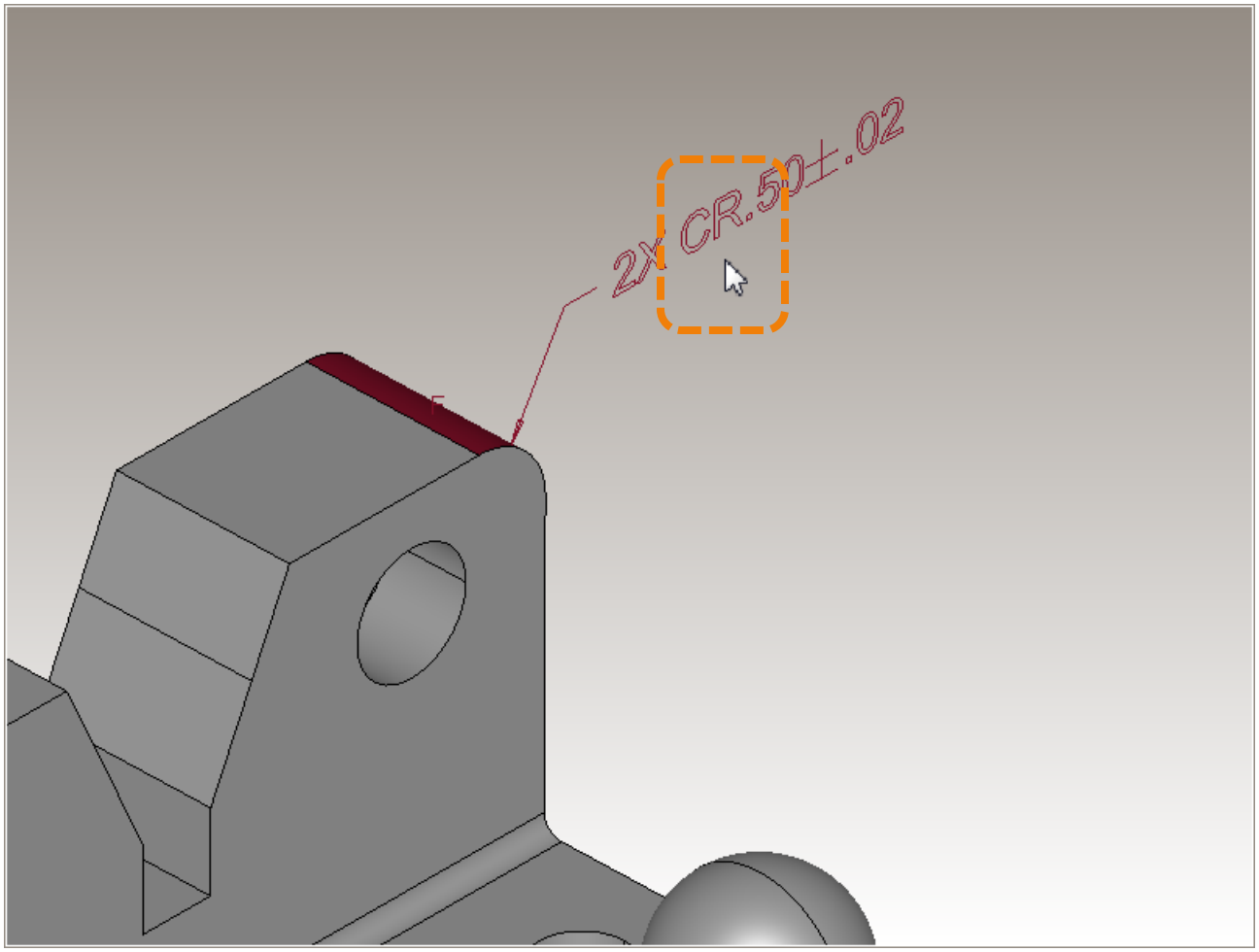

The controlled radius parameter of this dimension is defined using encoded text.

Return to Index

ITI TranscenData

Annotation Parameters: DIM missing dual dimension tolerance

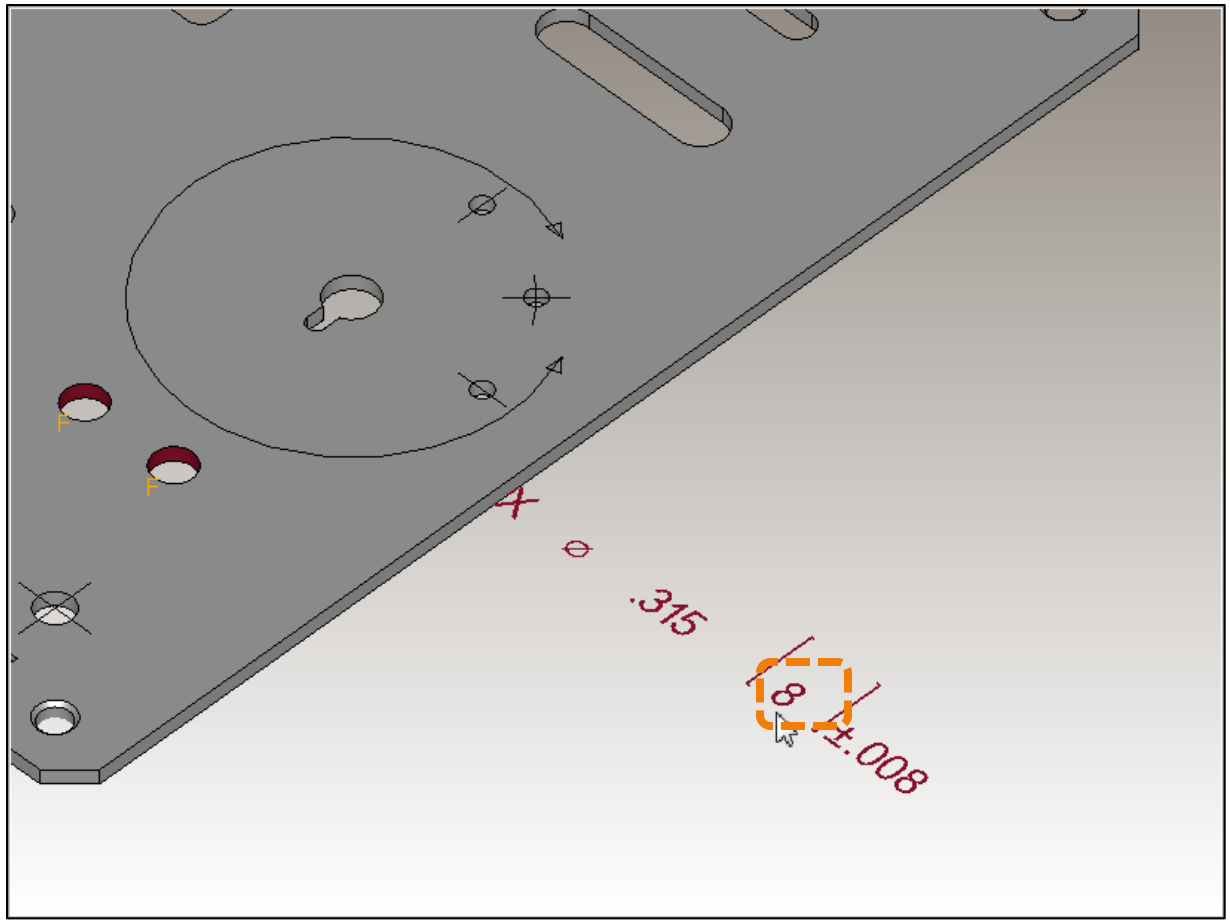

This dual dimension is missing a tolerance value.

Return to Index

TranscenData

Annotation Parameters: DIM not defined as reference DIM

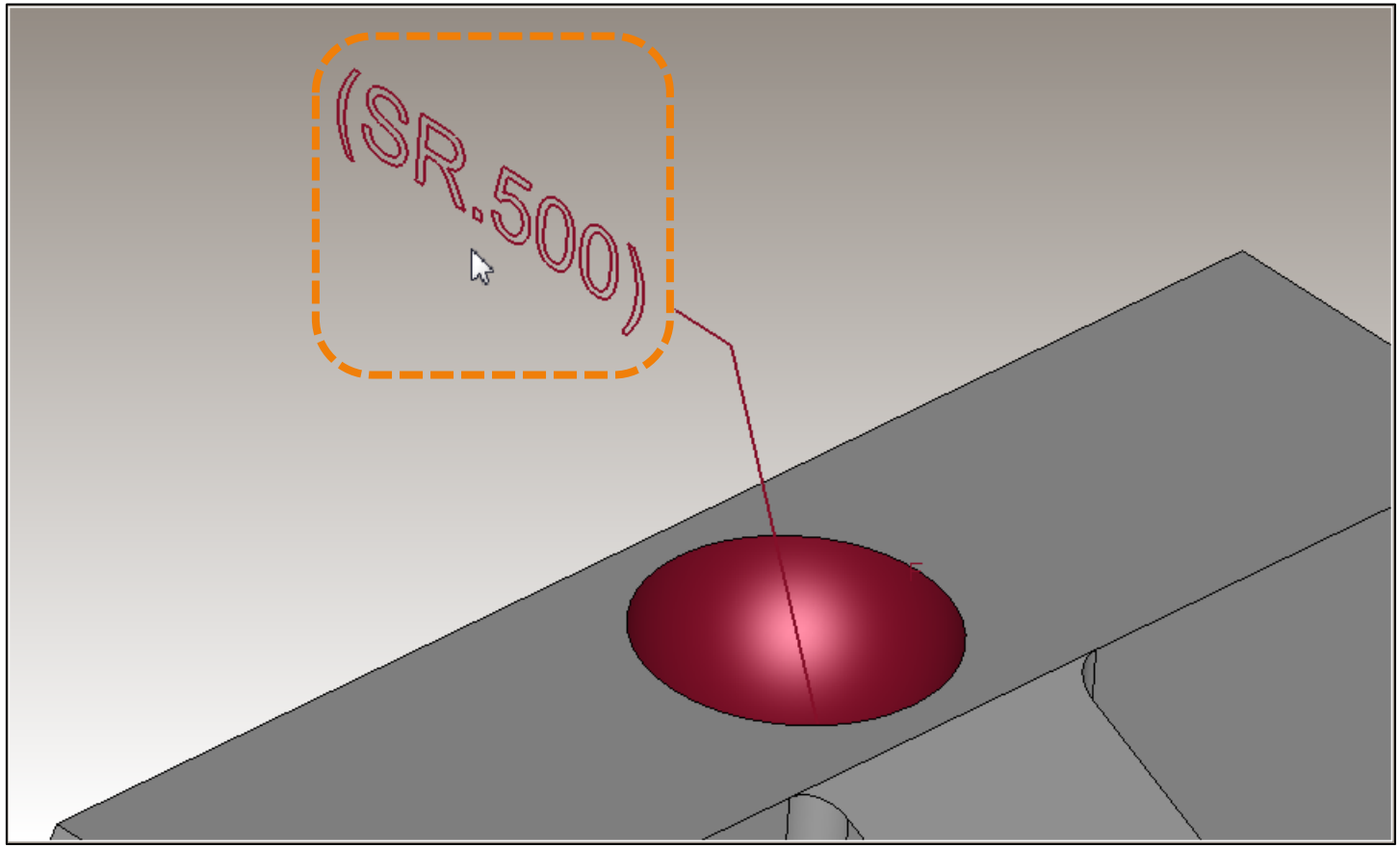

This dimension has parentheses, as specified, but is not defined as a reference dimension.

Return to Index

TranscenData

Annotation Parameters: DIM origin not defined

Incorrect

Correct

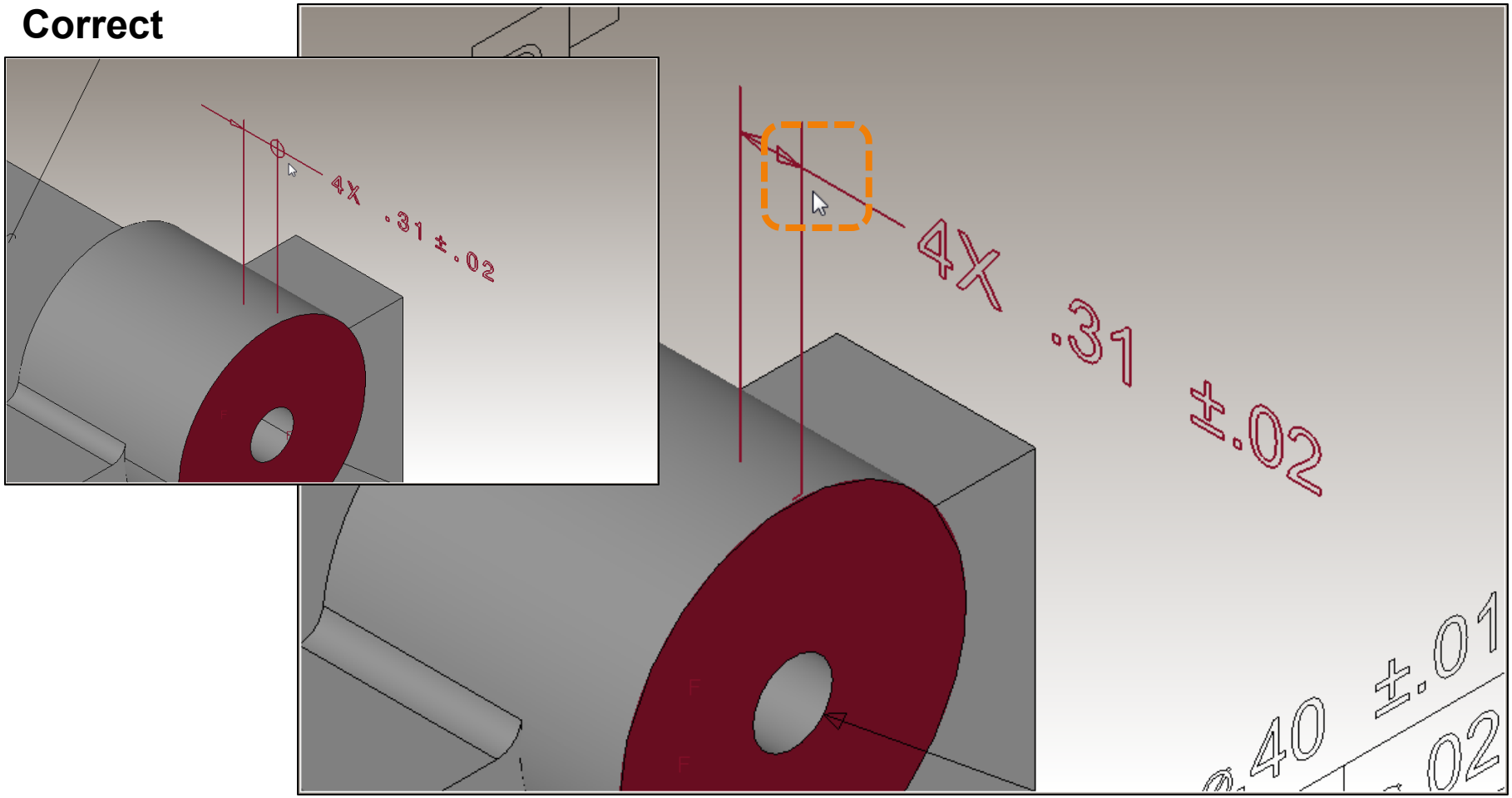

The origin for this oriented dimension is not defined.

Return to Index

TranscenData

Annotation Parameters: DIM radius defined with encoded text

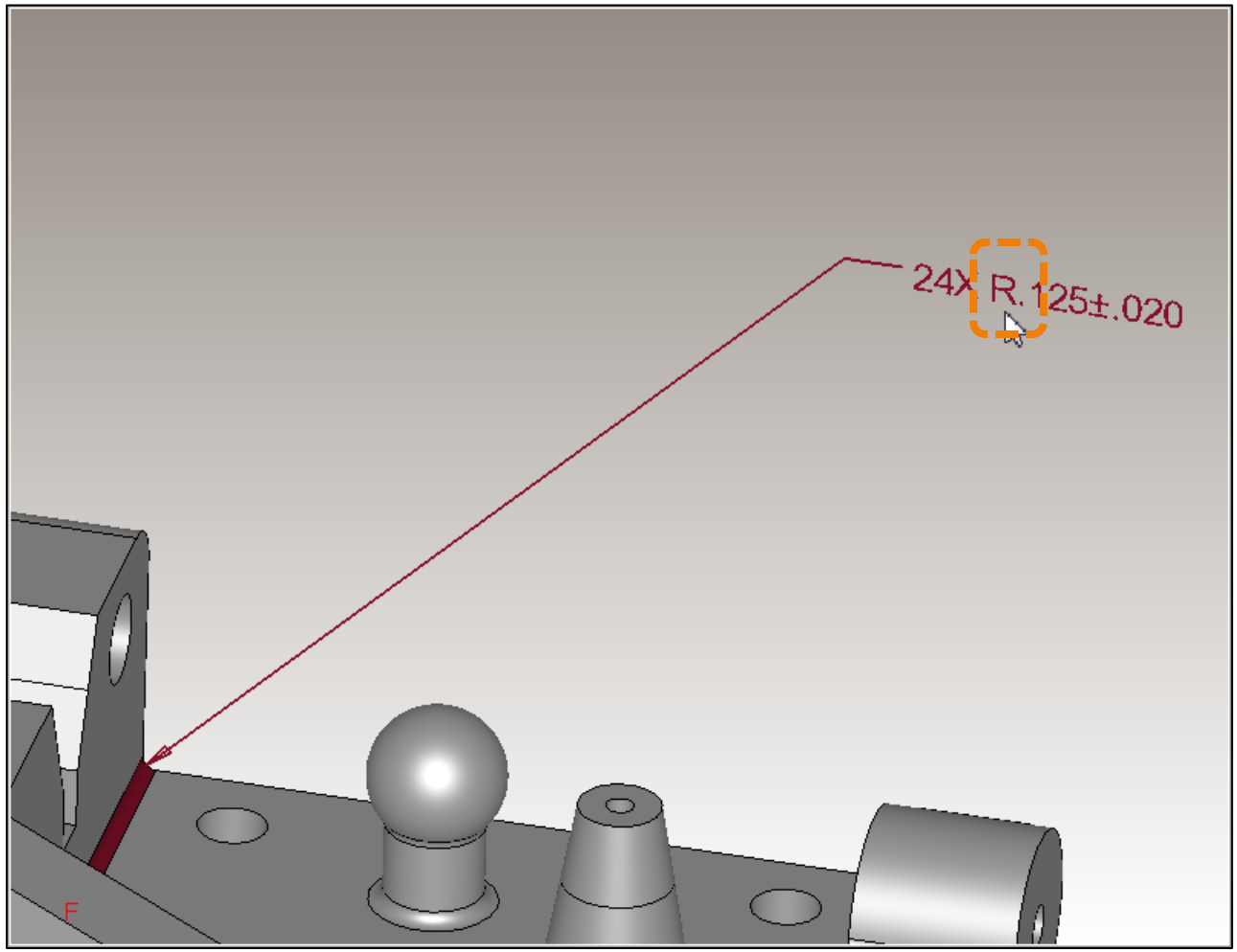

The radius parameter of this dimension is defined using encoded text.

Return to Index

TranscenData

Annotation Parameters: DIM slot radius defined with encoded text

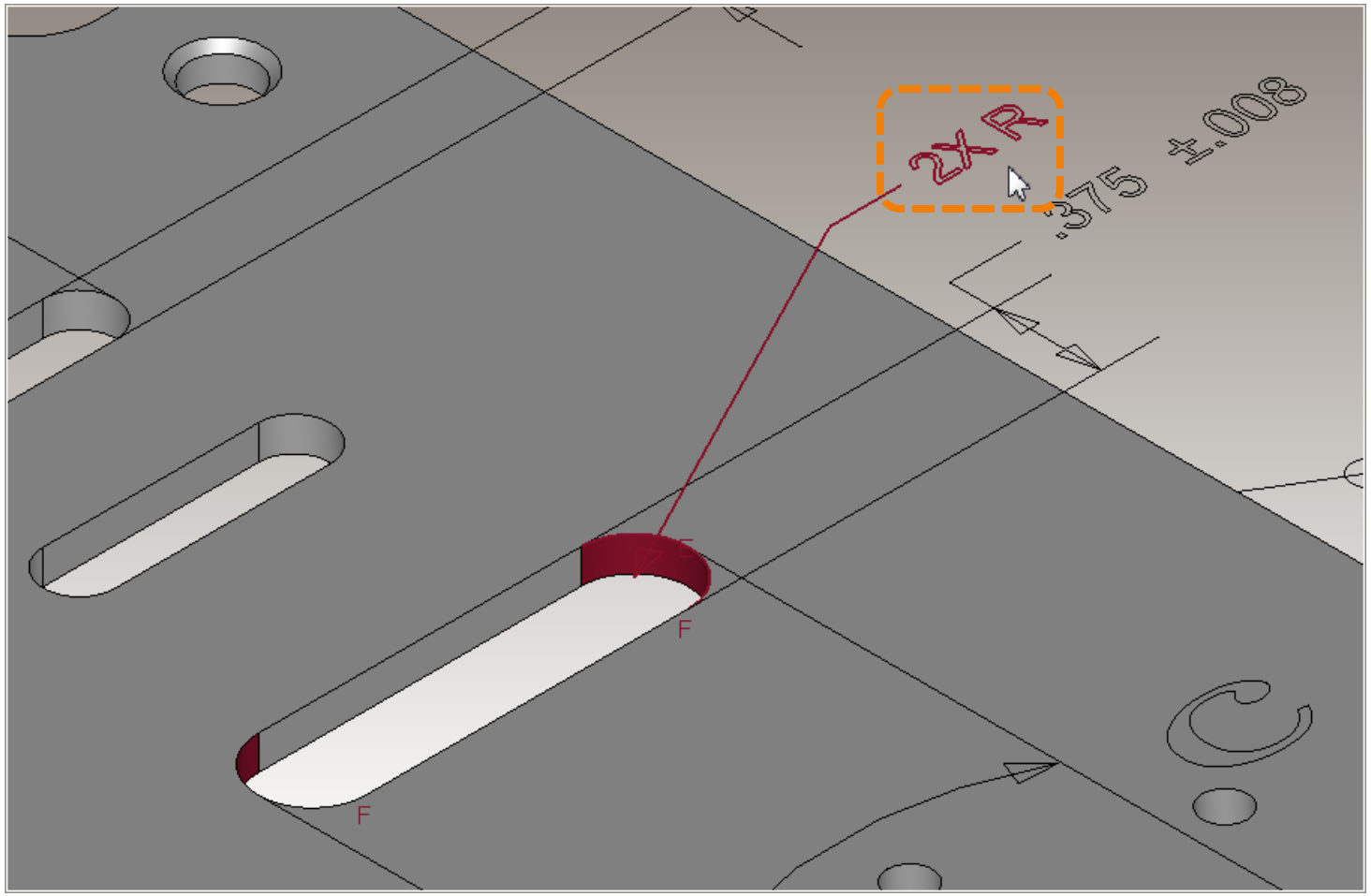

The radius parameter of this dimension is defined using encoded text.

Return to Index

TranscenData

Annotation Parameters: DIM spherical diameter defined with encoded text

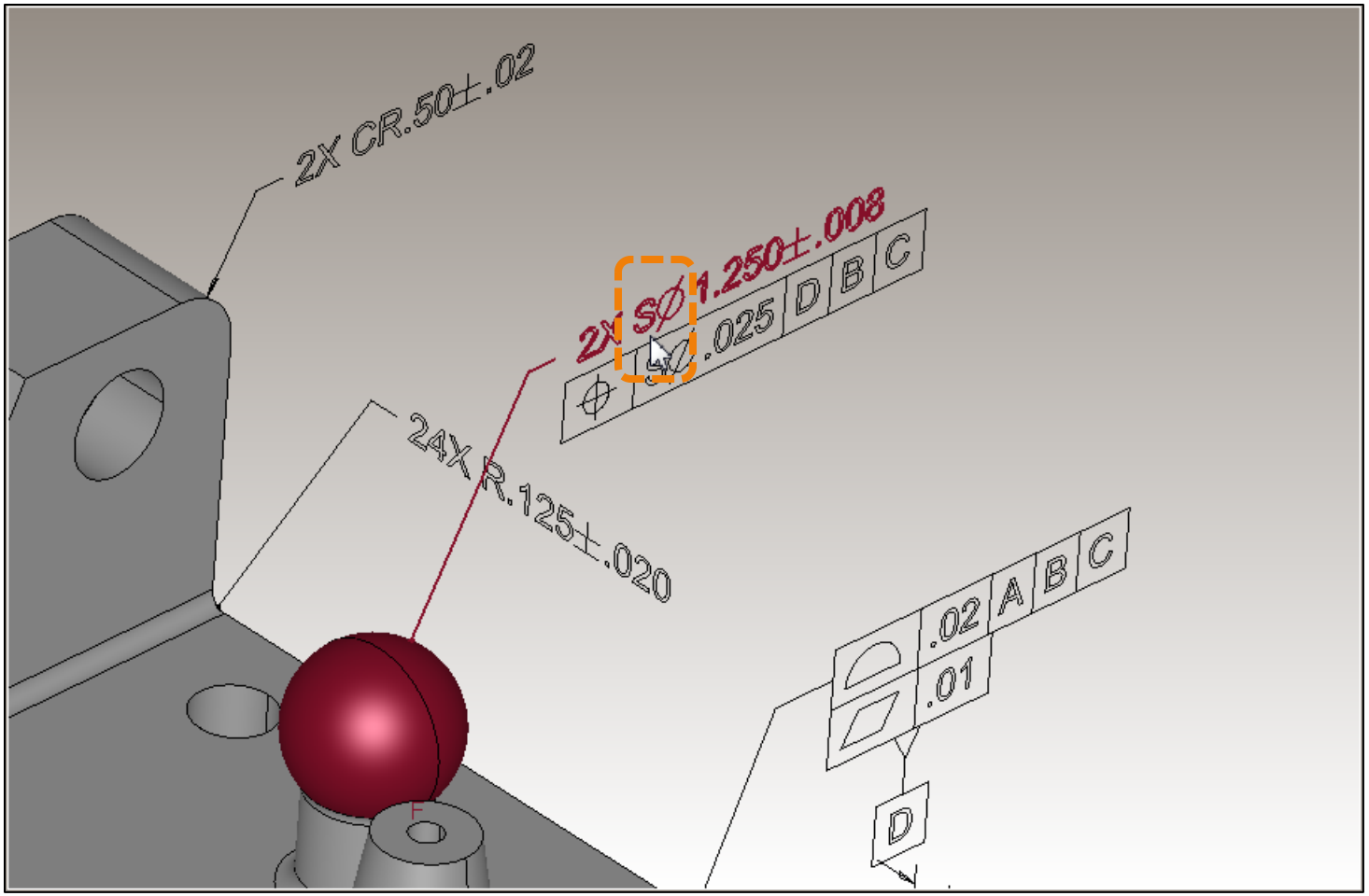

The spherical diameter parameter of this dimension is defined using encoded text.

Return to Index

TranscenData

Annotation Parameters: DIM spherical radius defined with encoded text

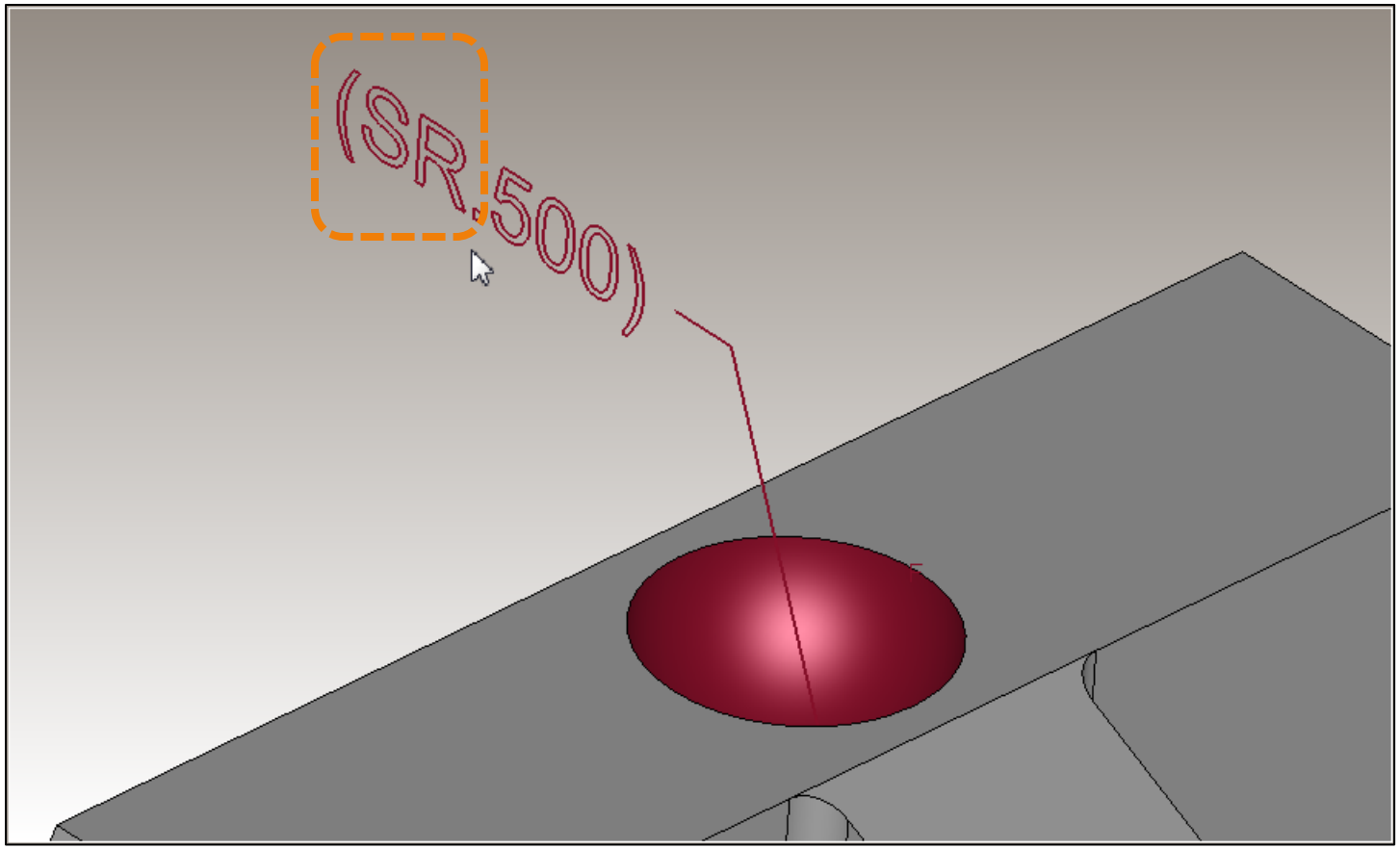

This spherical radius parameter of this dimension is defined using encoded text.

Return to Index

TranscenData

Annotation Parameters: DIM tapered center defined with encoded text

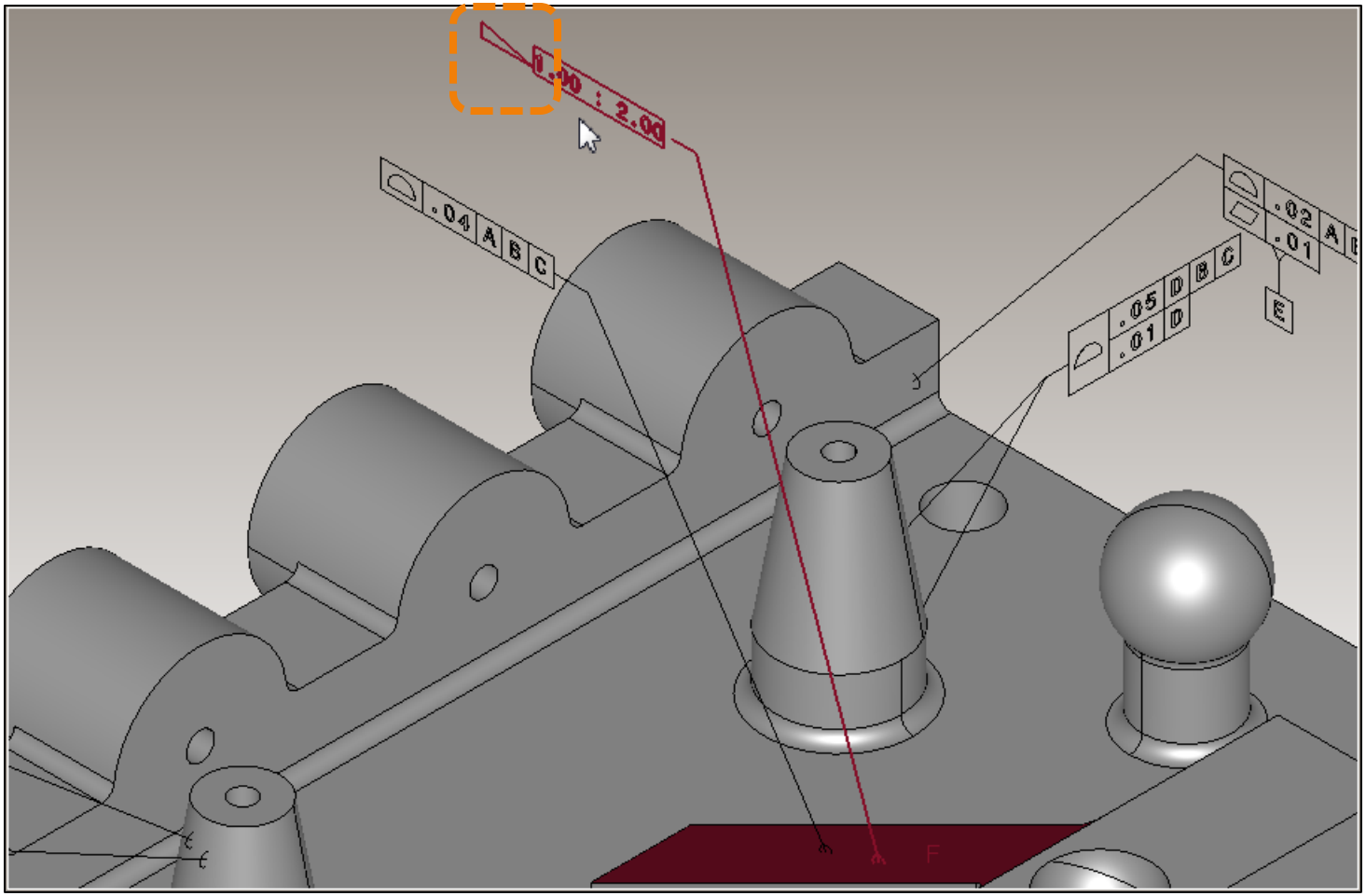

The tapered center parameter of this dimension is defined using encoded text.

Return to Index

TranscenData

Annotation Parameters: FCF between-basis defined with encoded text

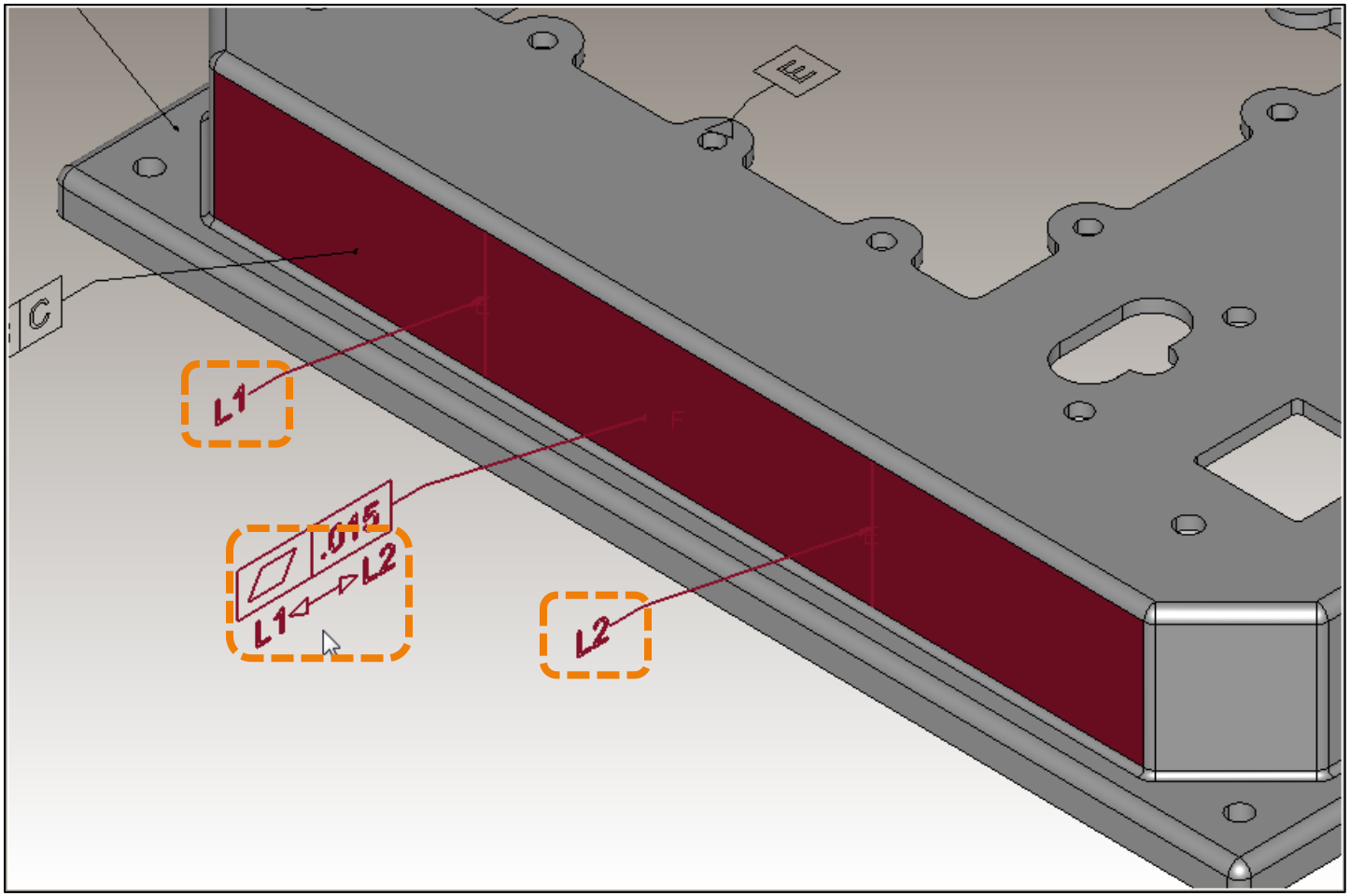

The between-basis for this feature control frame is defined as encoded text and not with named parameters.

Return to Index

TranscenData

Annotation Parameters: FCF diameter symbol not specified

Test Case

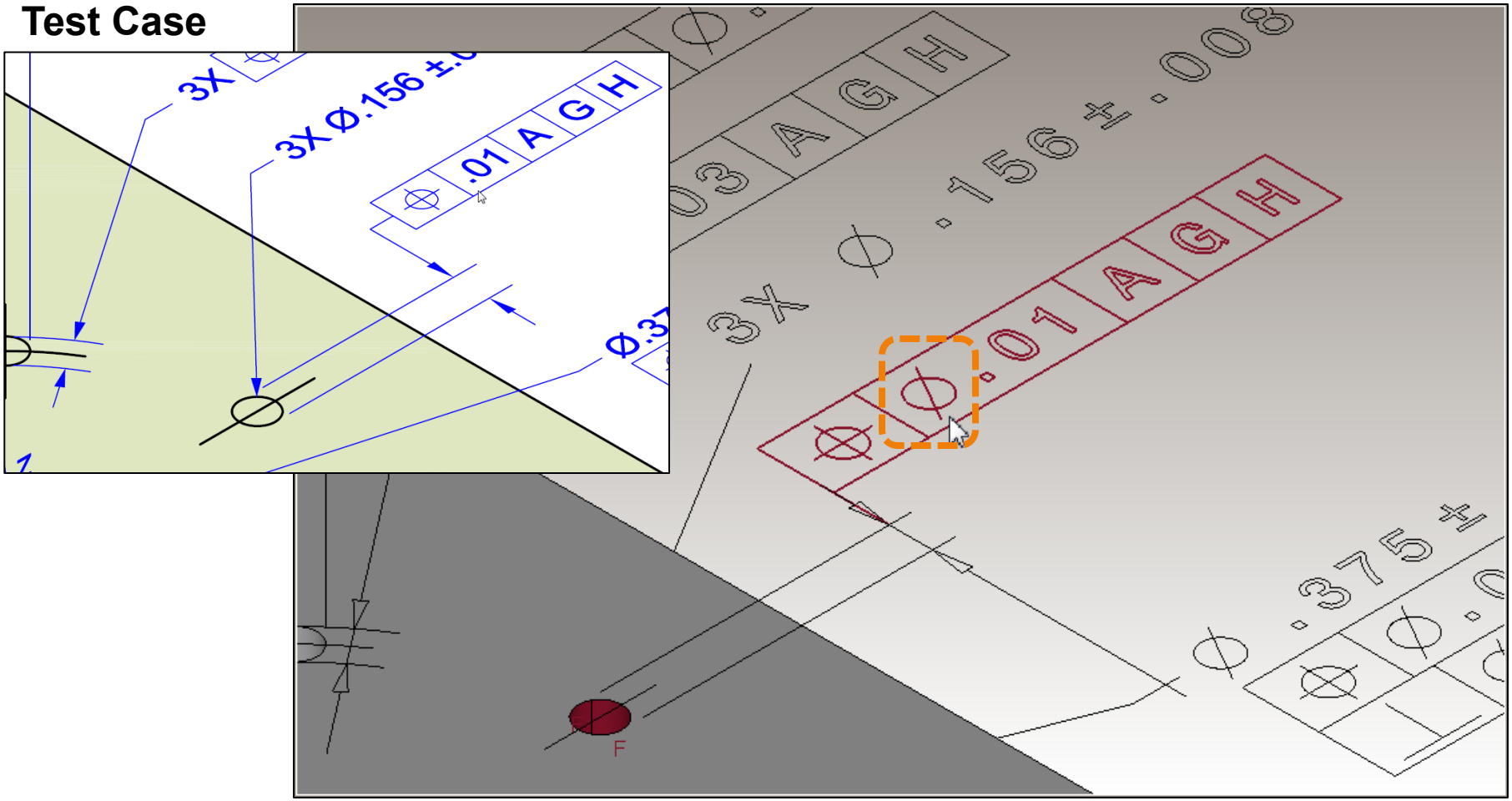

This geometric tolerance has an incorrect diameter symbol.

Return to Index

TranscenData

Annotation Parameters: FCF dual dimension defined with encoded text

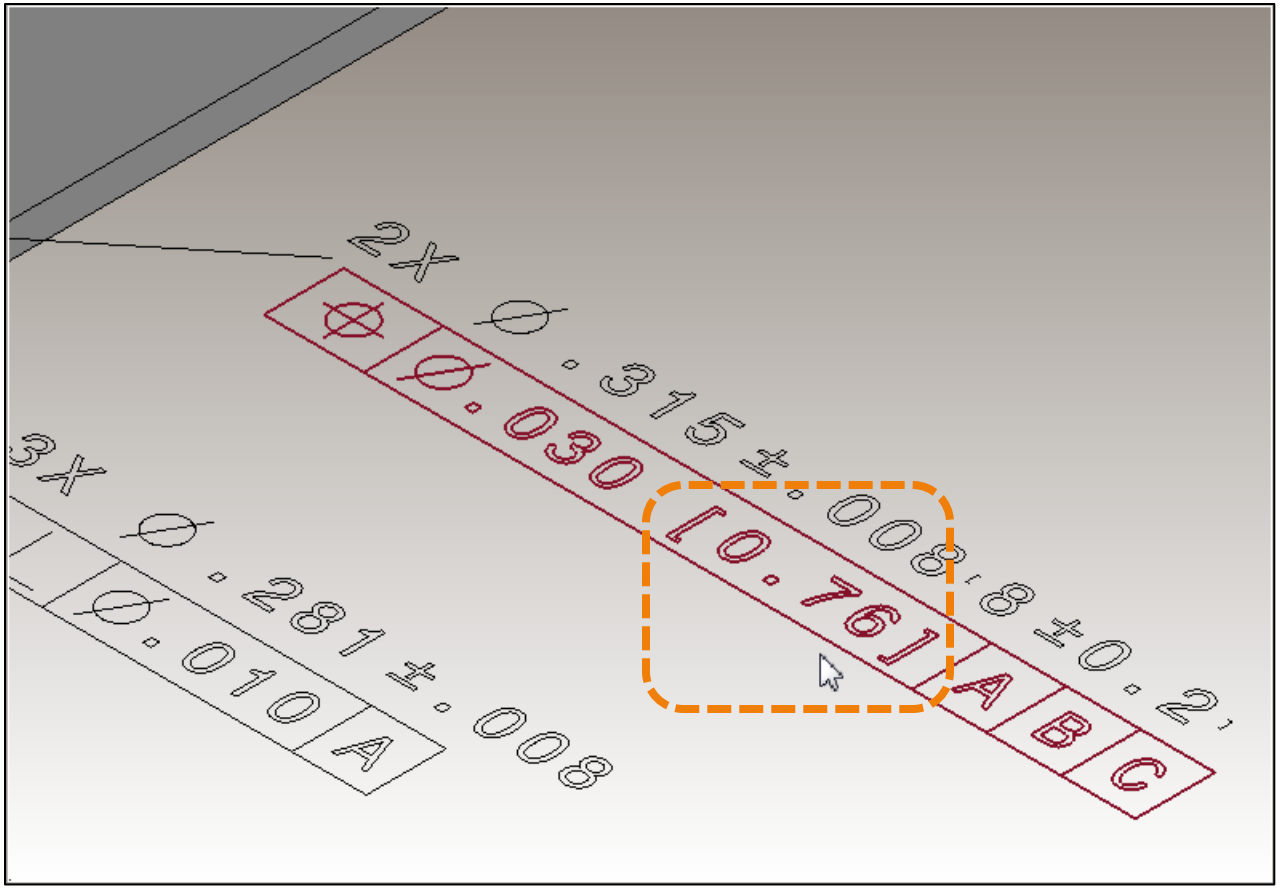

This dual dimension is defined using encoded text.

Return to Index

TranscenData

Annotation Parameters: FCF free state defined with encoded text

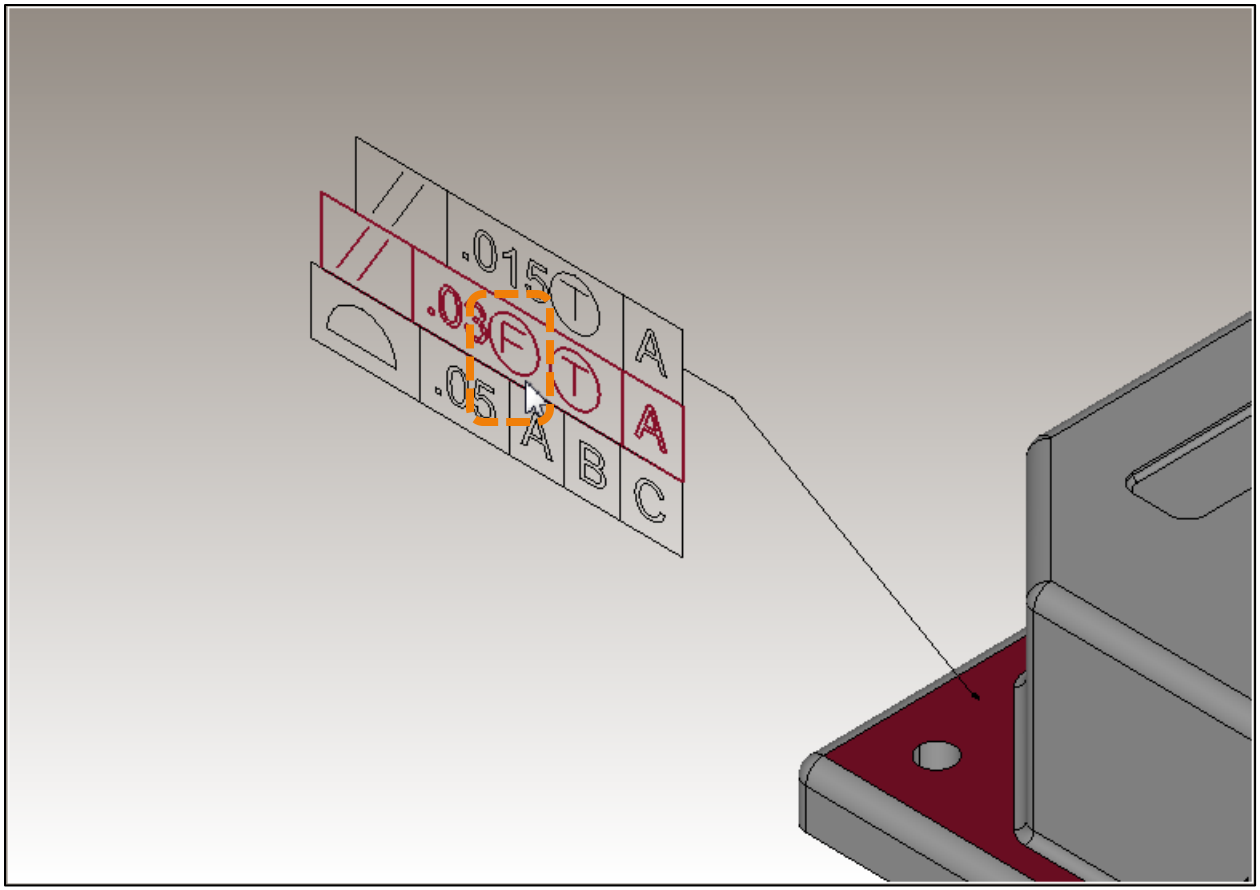

This free state tolerance modifier is defined using encoded text.

Return to Index

TranscenData

Annotation Parameters: FCF missing all-around designation

Test Case

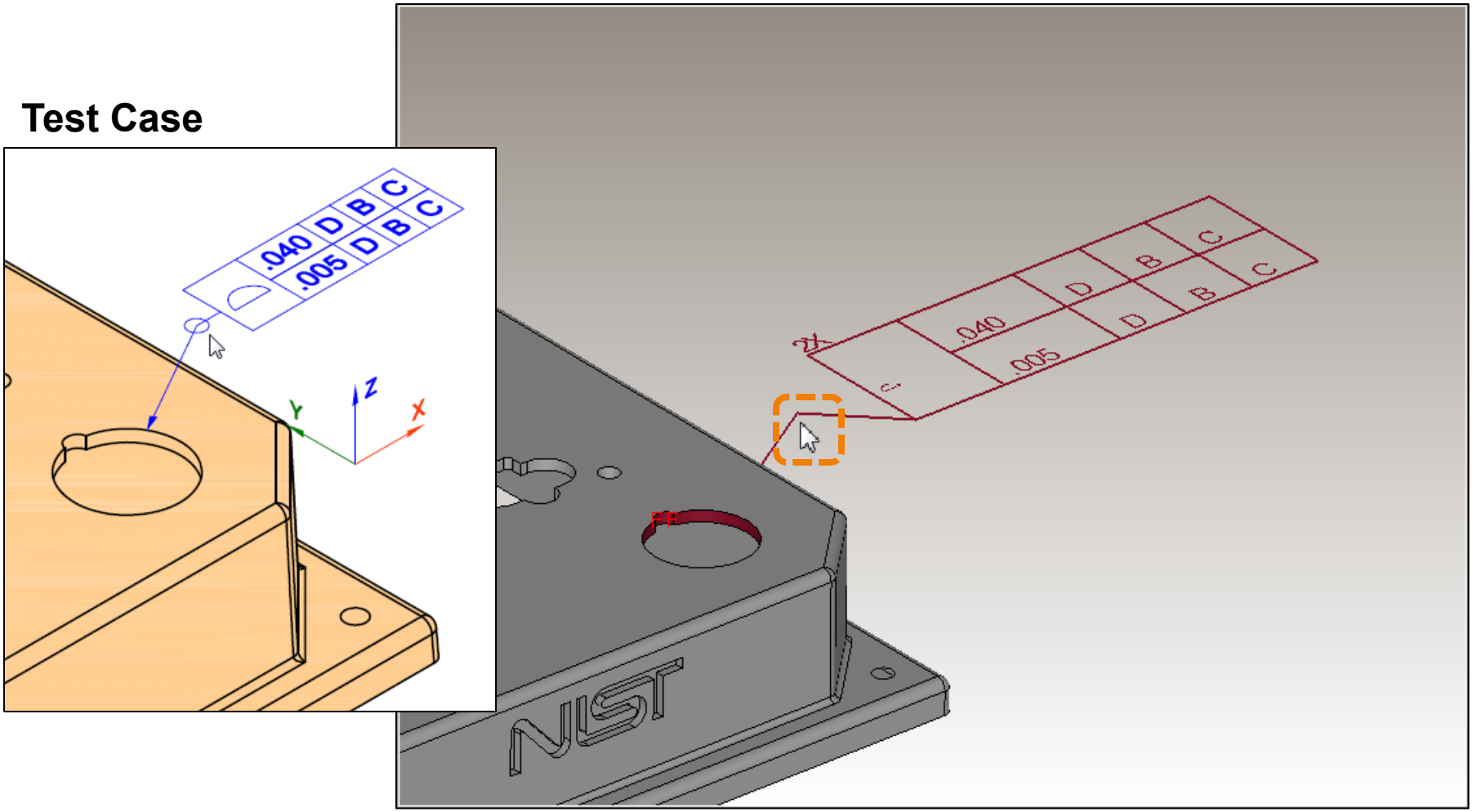

This feature control frame is missing an all-around symbol.

Return to Index

TranscenData

Annotation Parameters: FCF missing tangent plane modifier

Test Case

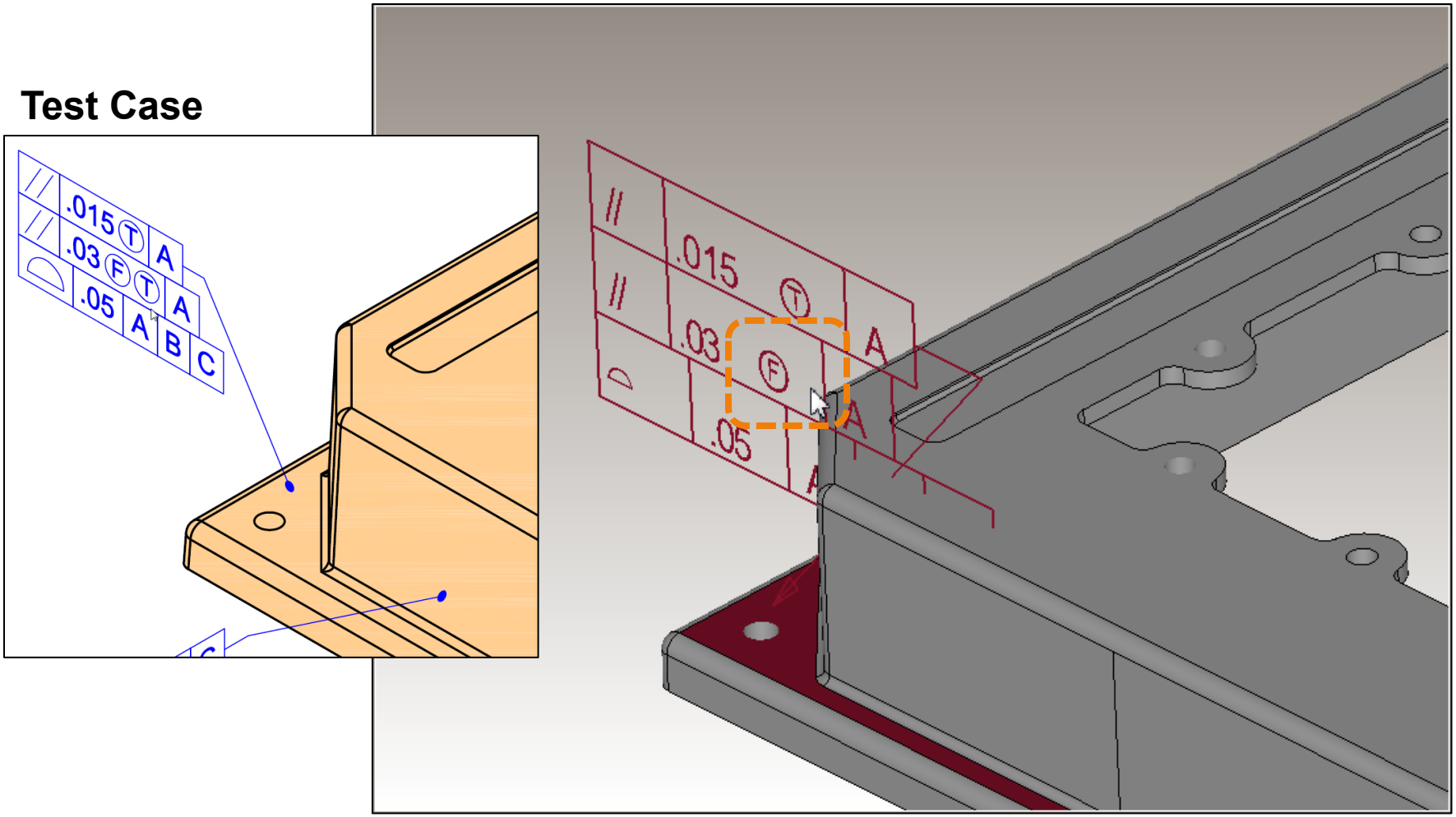

This feature control frame is missing the specified tangent plane modifier.

Return to Index

TranscenData

Annotation Parameters: FCF spherical diameter defined with encoded text

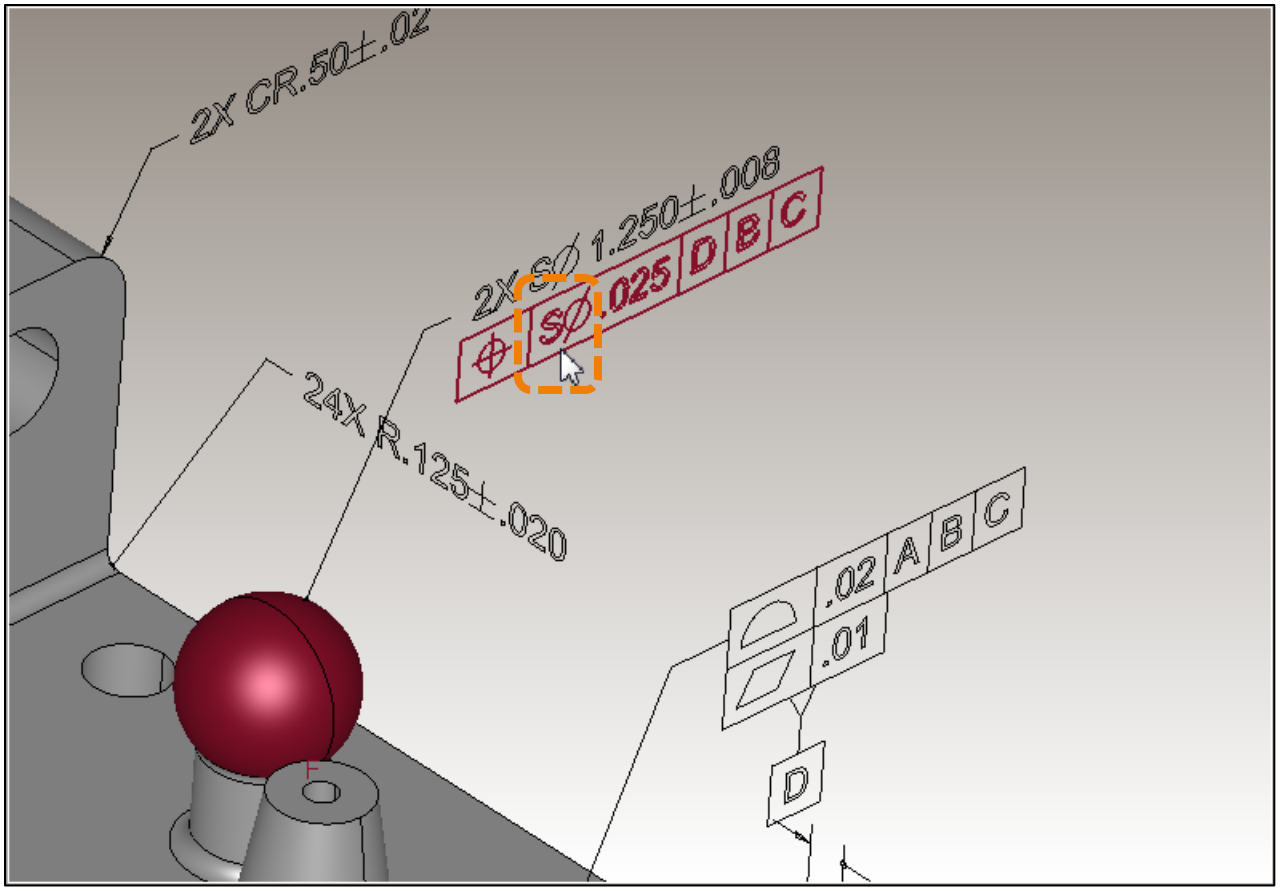

This spherical diameter tolerance zone symbol is defined using encoded text.

Return to Index

CAD System Representation Limitations for Annotation Geometry

Return to Index

Annotation Geometry: DFS not associated with complete set of faces

Incomplete

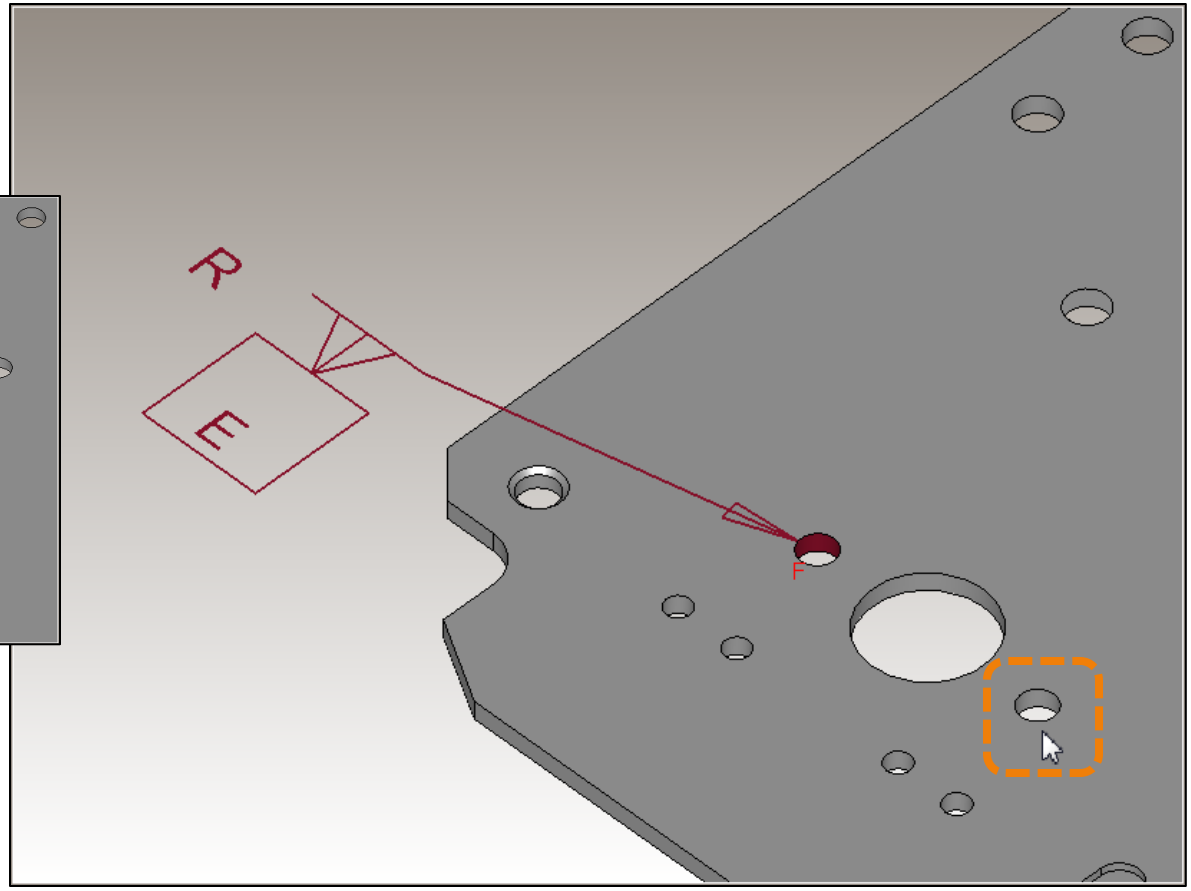

Complete

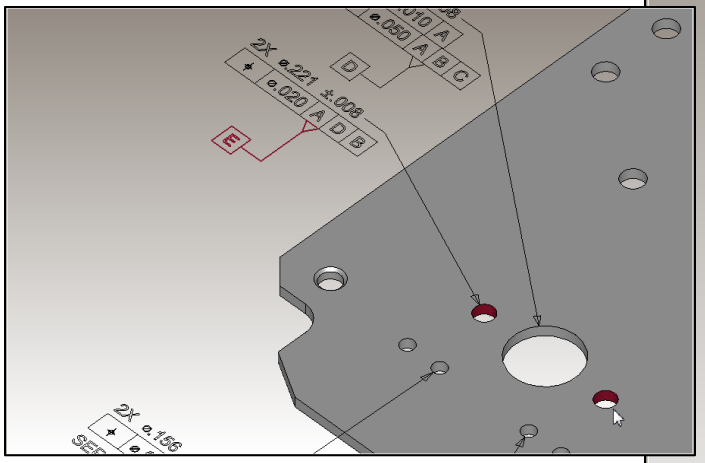

This datum feature symbol is not associated with all of the specified faces.

Return to Index

TranscenData

Annotation Geometry: DIM associated with incorrect face

Correct

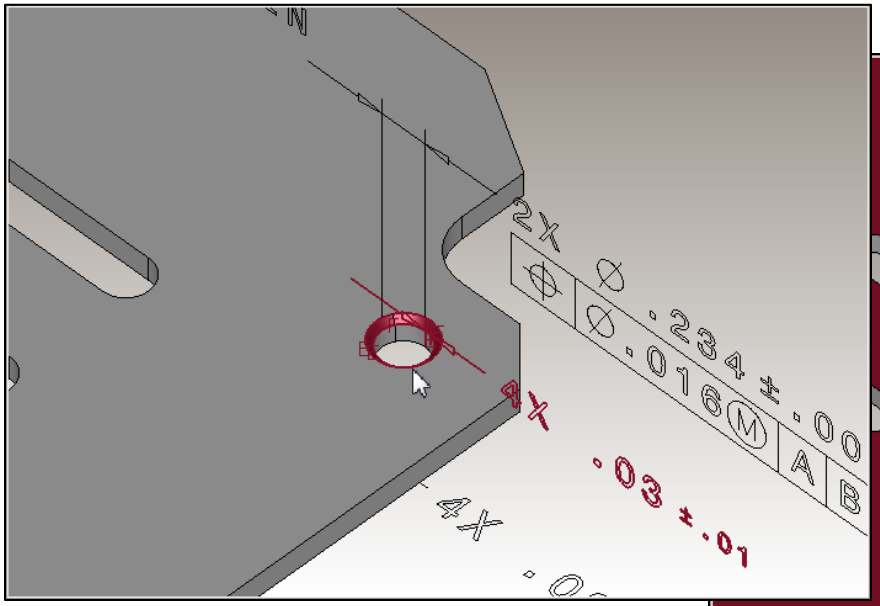

Incorrect

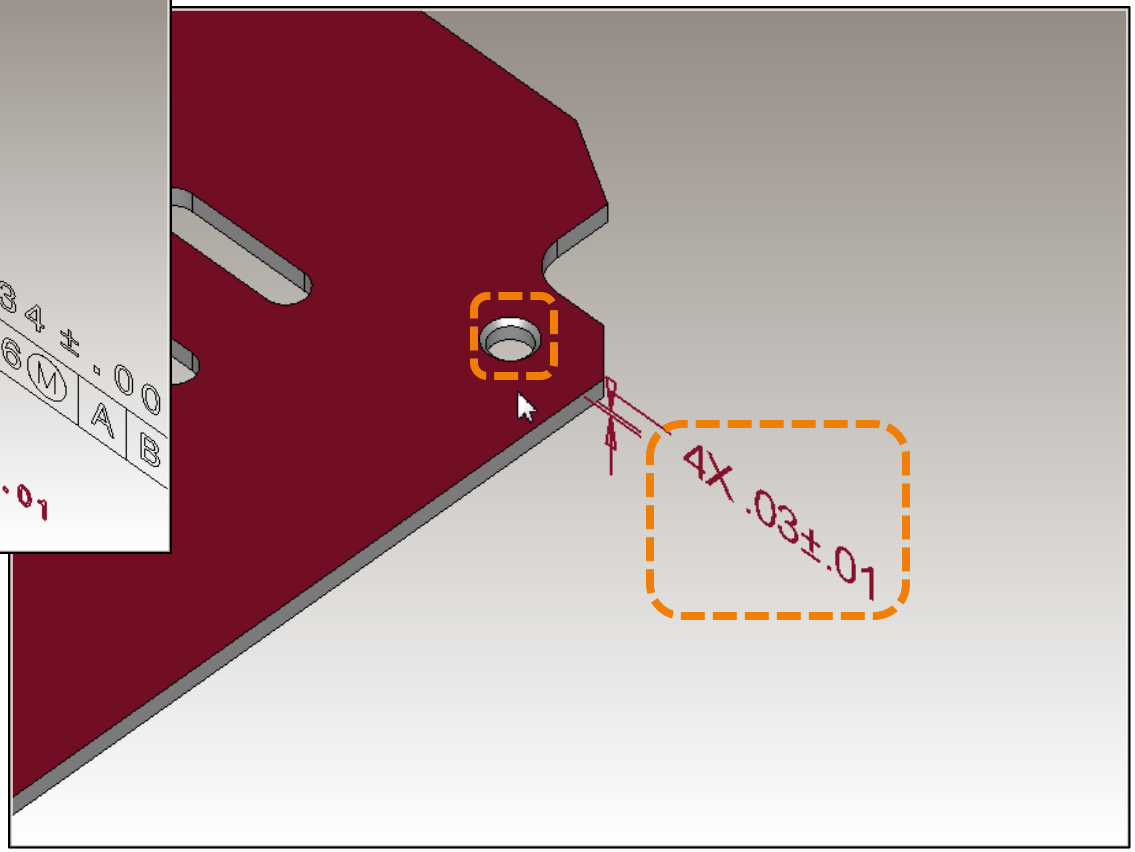

This dimension is not associated with the correct specified face.

Return to Index

TranscenData

Annotation Geometry: DIM not associated with complete set of faces

Complete

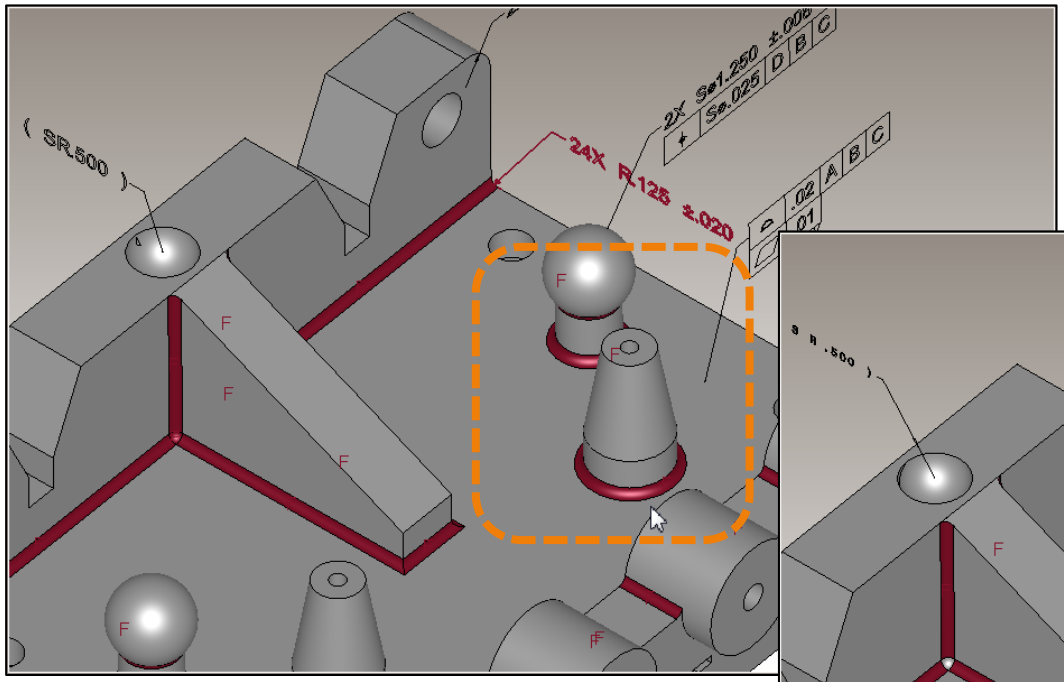

Incomplete

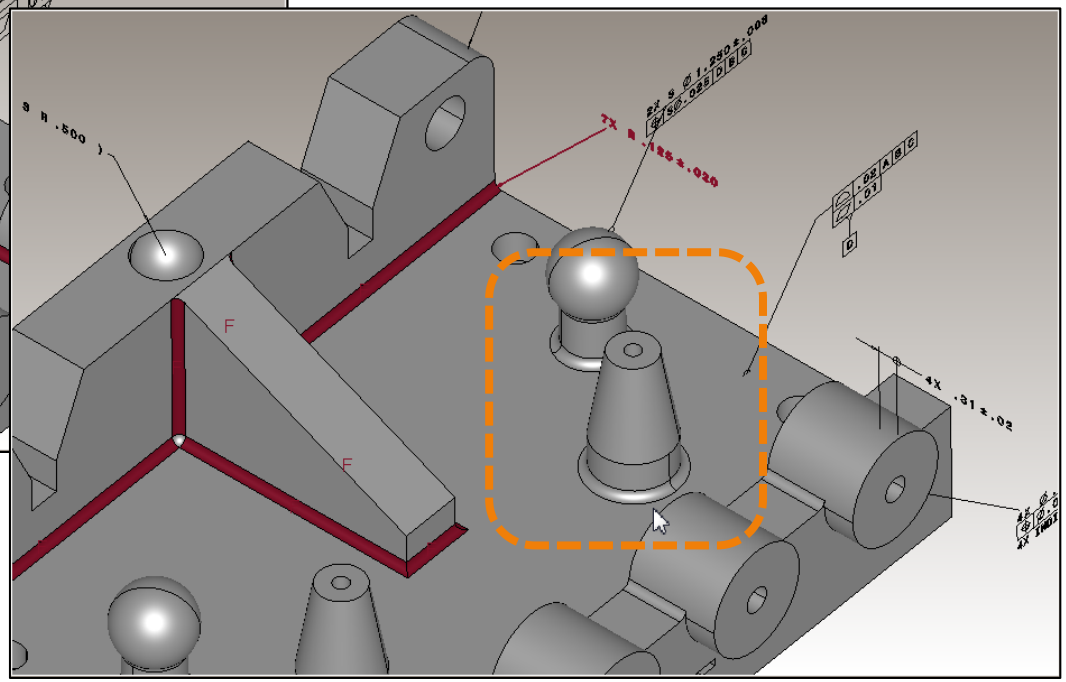

This dimension is only associated with some of the specified faces.

Return to Index

TranscenData

Annotation Geometry: DIM not associated with edge

Correct

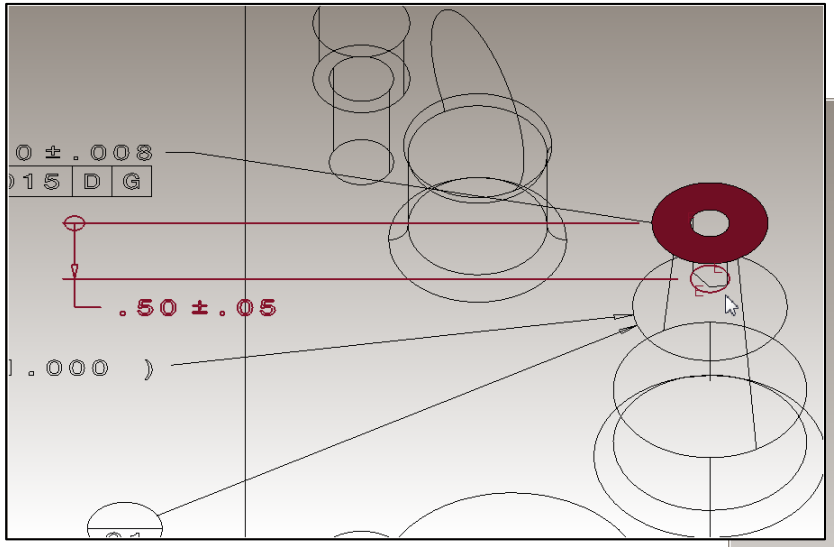

Incorrect

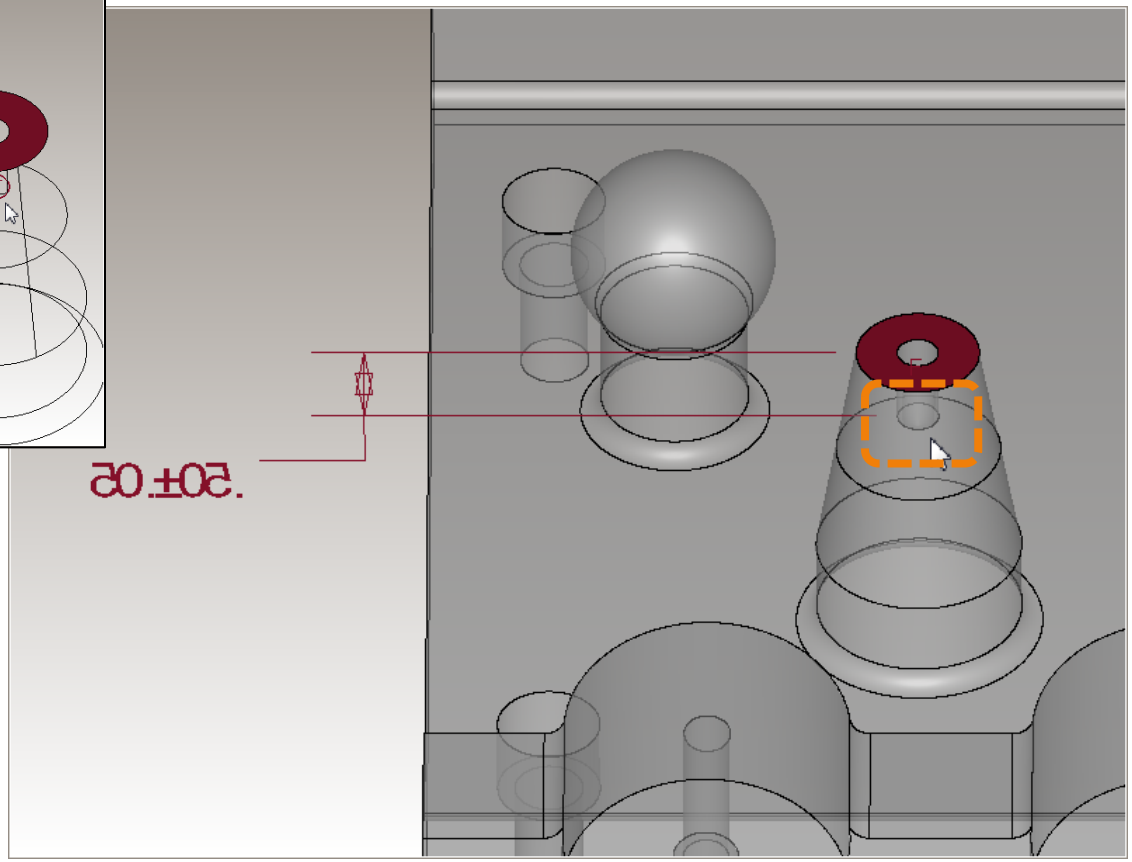

This dimension is not associated with the specified edge.

Return to Index

TranscenData

Annotation Geometry: DIM not associated with face

Correct

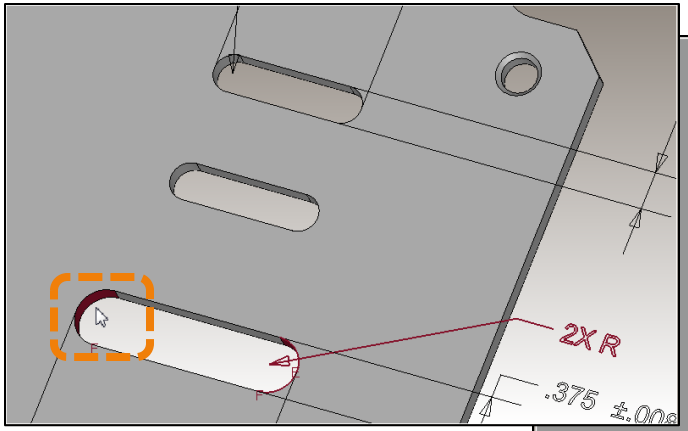

Incorrect

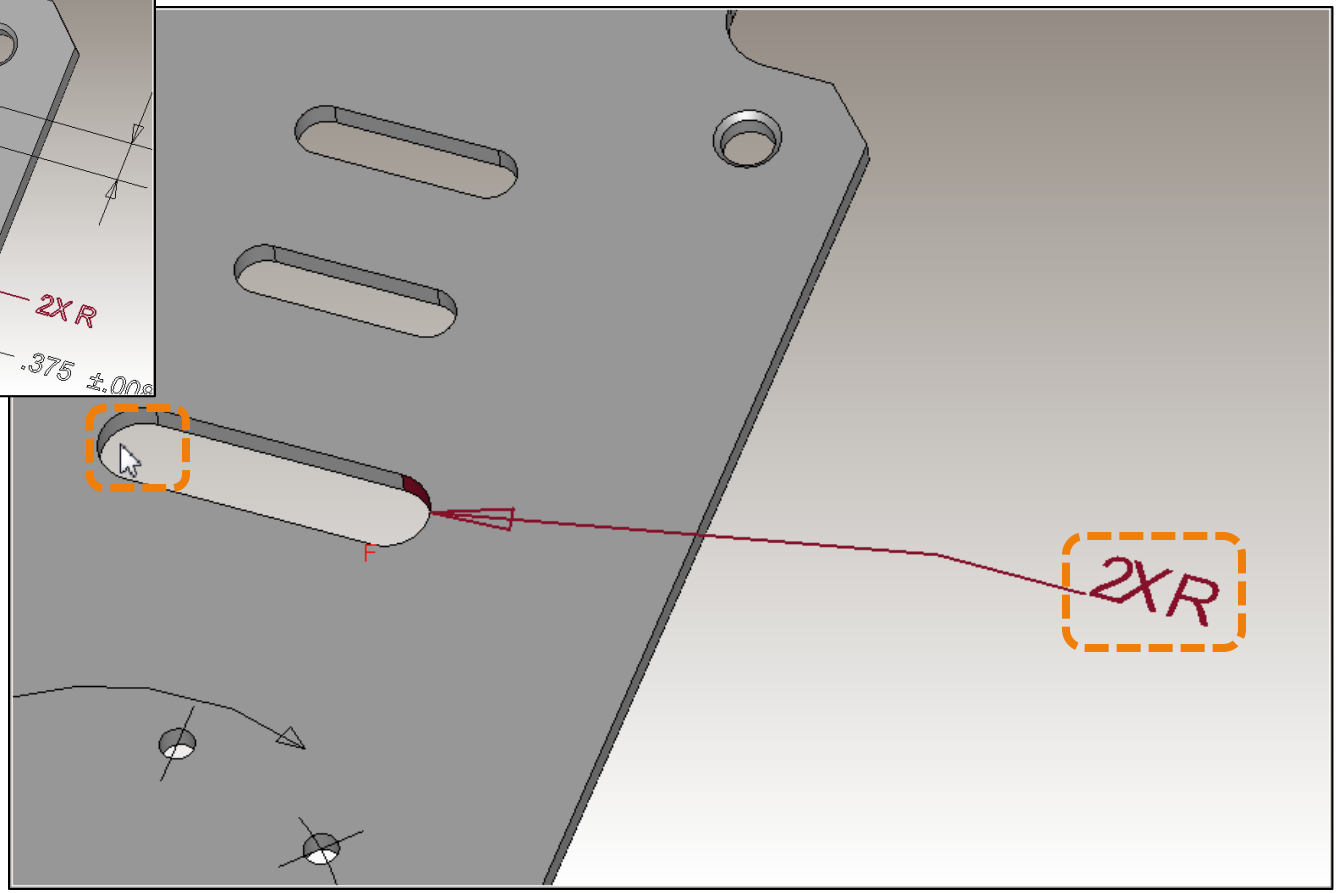

This dimension is not associated with both specified faces.

Return to Index

TranscenData

Annotation Geometry: DTS not associated with SG curve

Incorrect

Correct

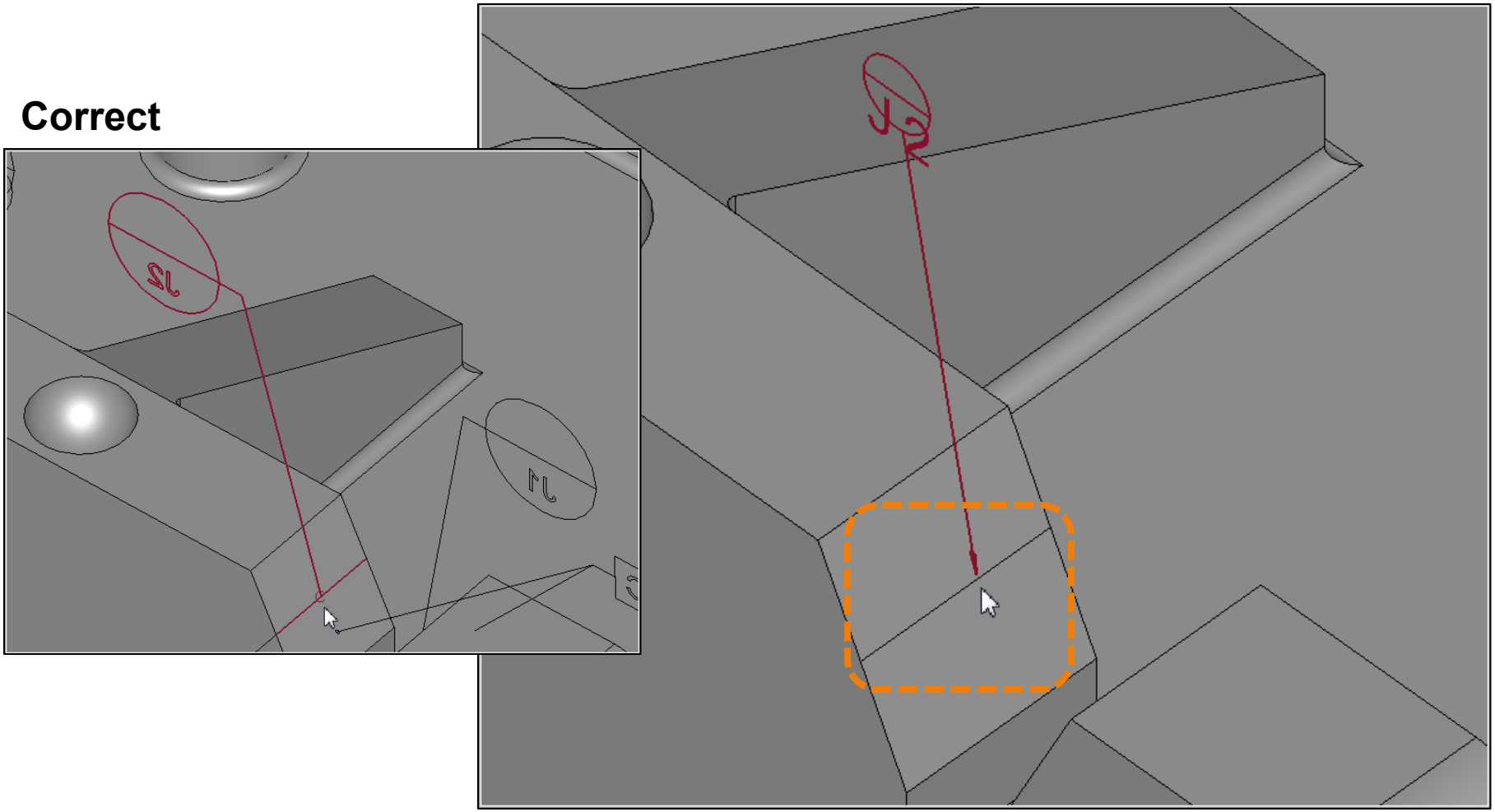

This datum target symbol is not associated with the specified curve.

Return to Index

TranscenData

Annotation Geometry: FCF associated with incorrect face

Correct

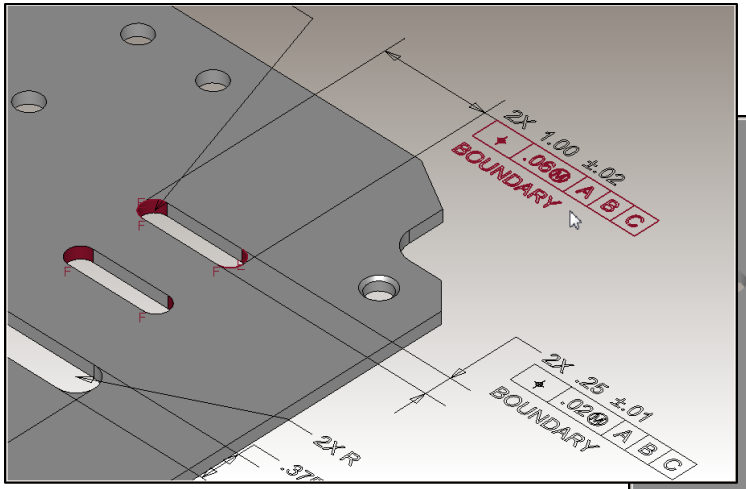

Incorrect

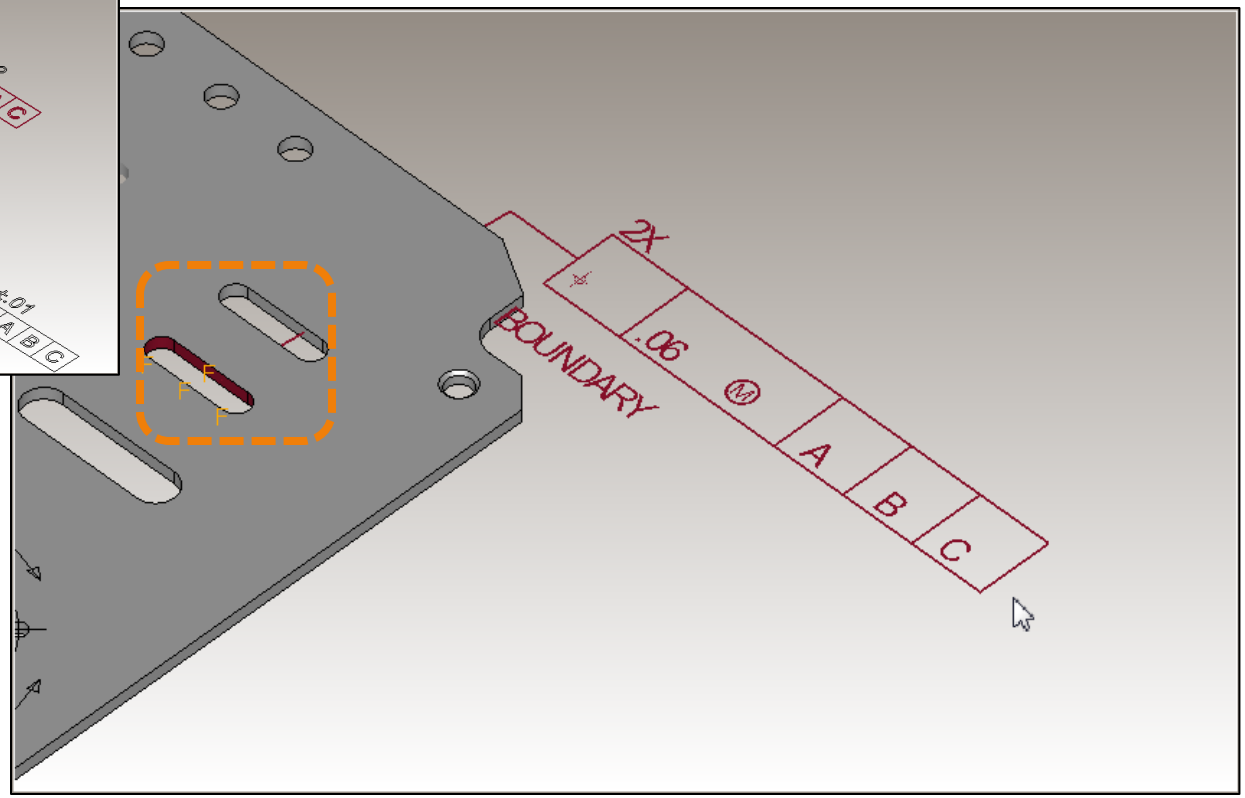

This feature control frame is not associated with the correct faces.

Return to Index

TranscenData

Annotation Geometry: FCF extension line DIM not associated with correct face

Complete

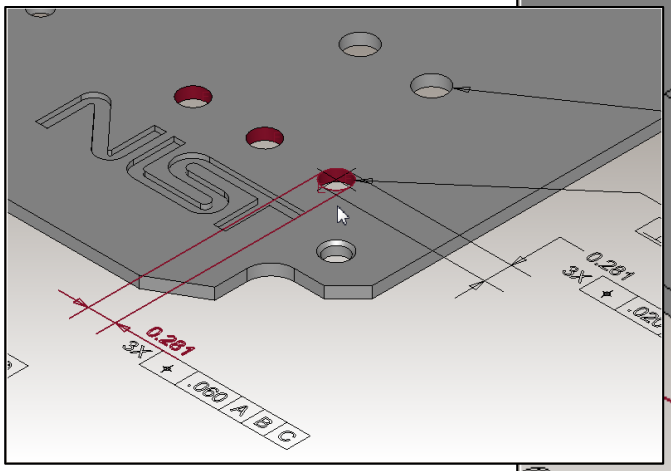

Incomplete

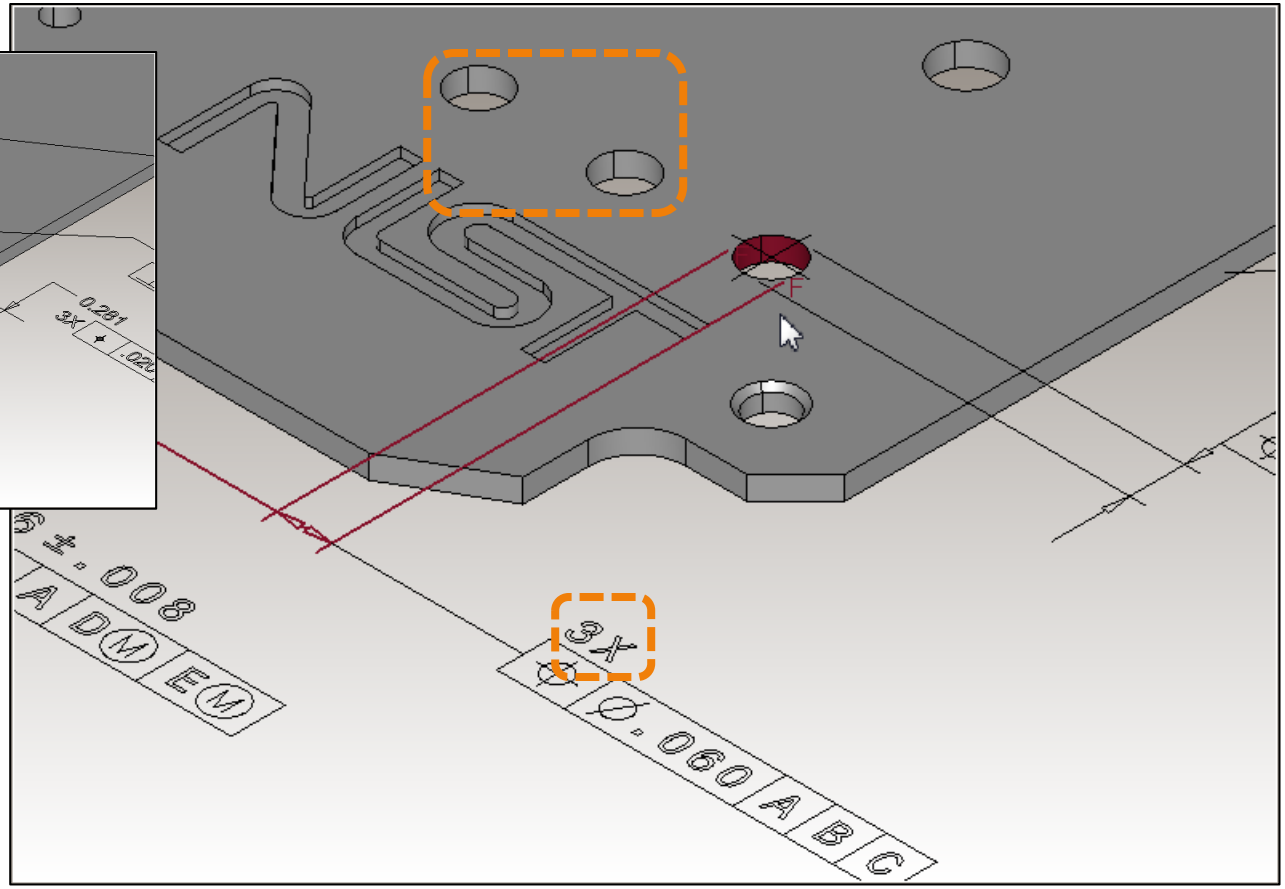

The extension lines for this dimension are not associated with all of the specified faces.

Return to Index

TranscenData

Annotation Geometry: FCF not associated with complete set of faces

Complete

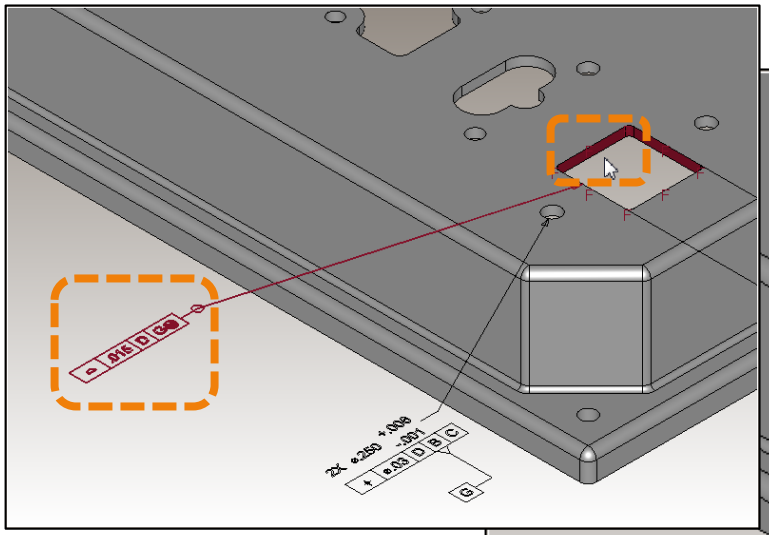

Incomplete

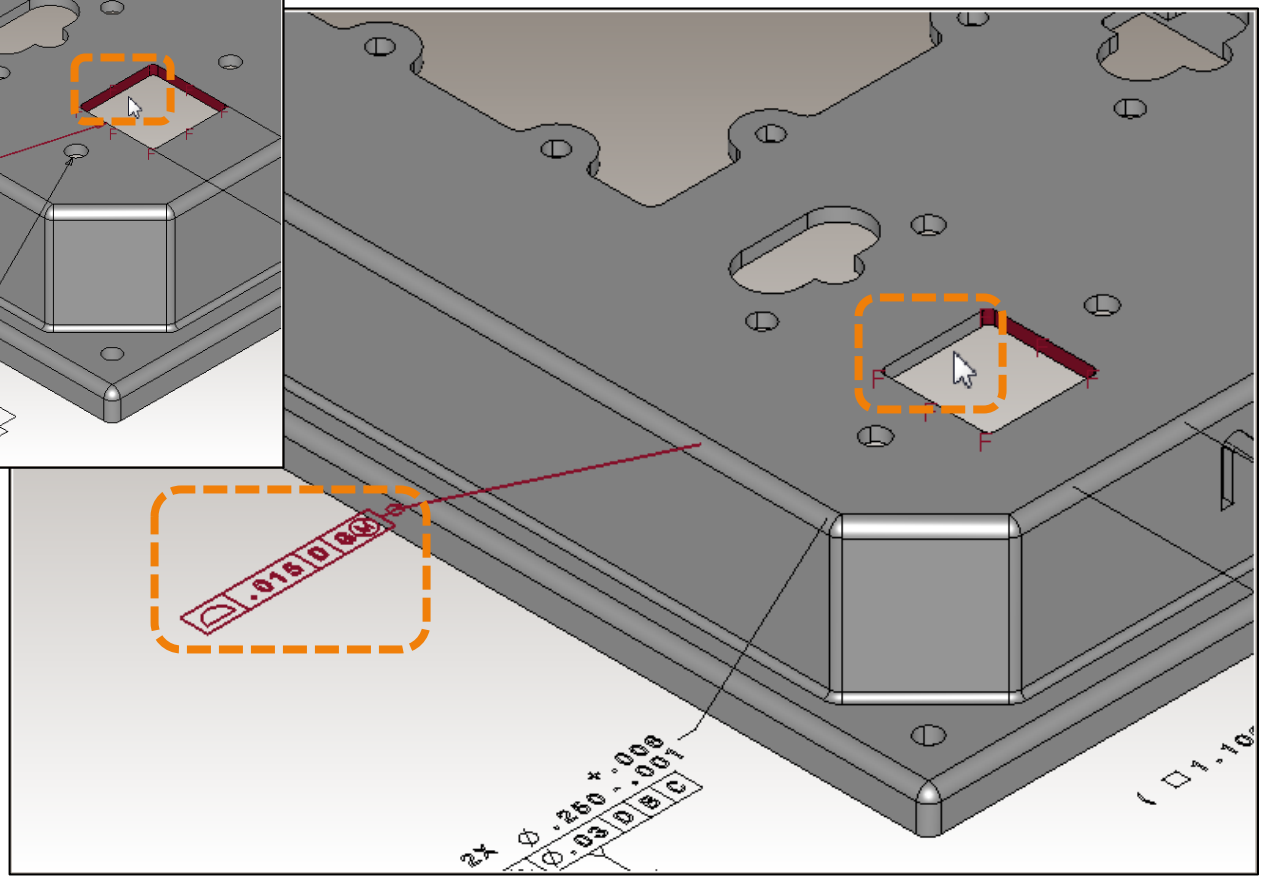

This feature control frame is not associated with all of the specified faces.

Return to Index

TranscenData

Annotation Geometry: FCF not associated with SG curve

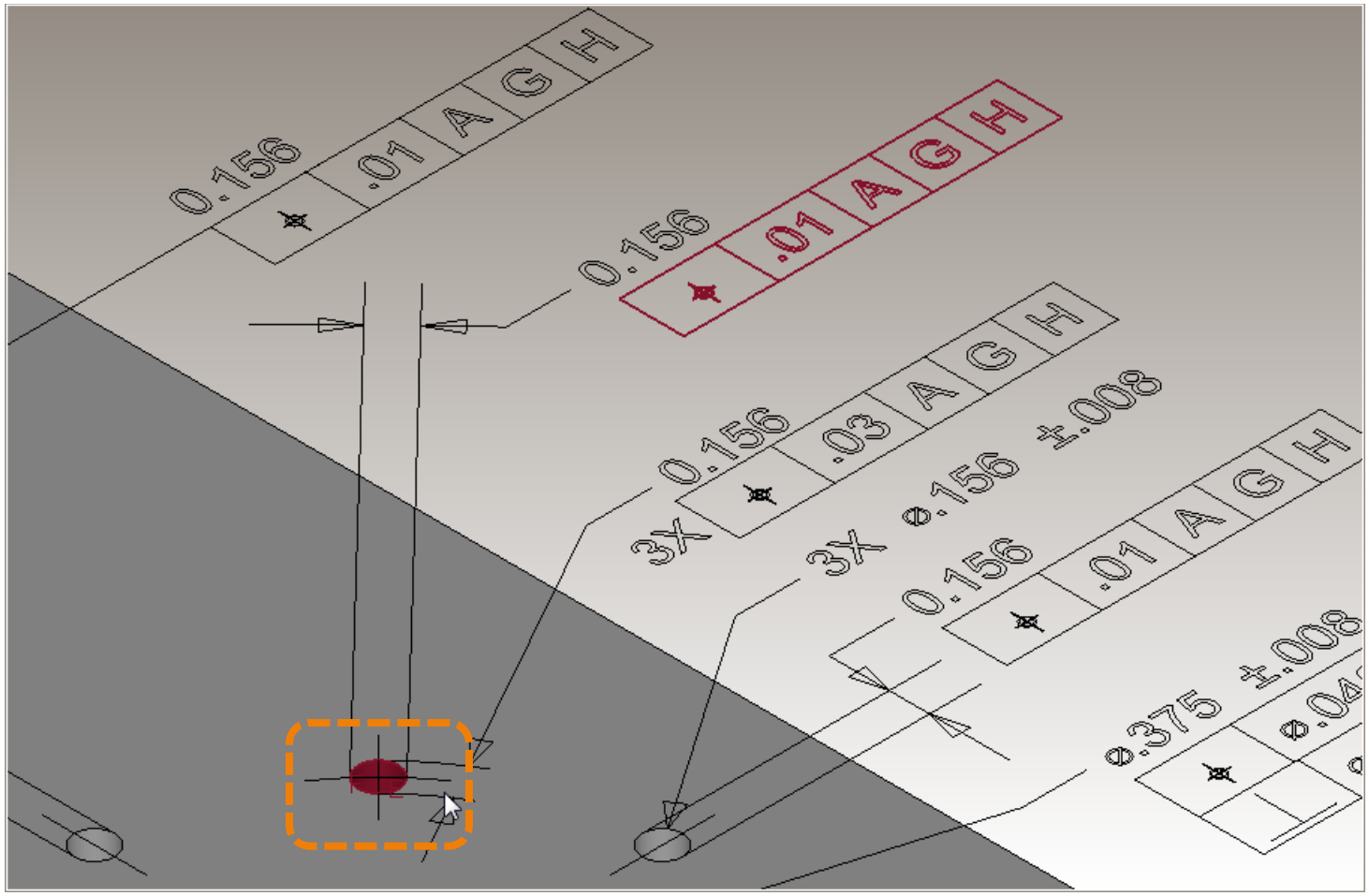

This feature control frame is not associated with the supplemental geometry curve that defines its tolerance direction on this face.

Return to Index

TranscenData

CAD System Style Differences for Annotation Structure

Return to Index

ITI TranscenData

Annotation Structure: DTS requires DFS to be defined

Style Difference

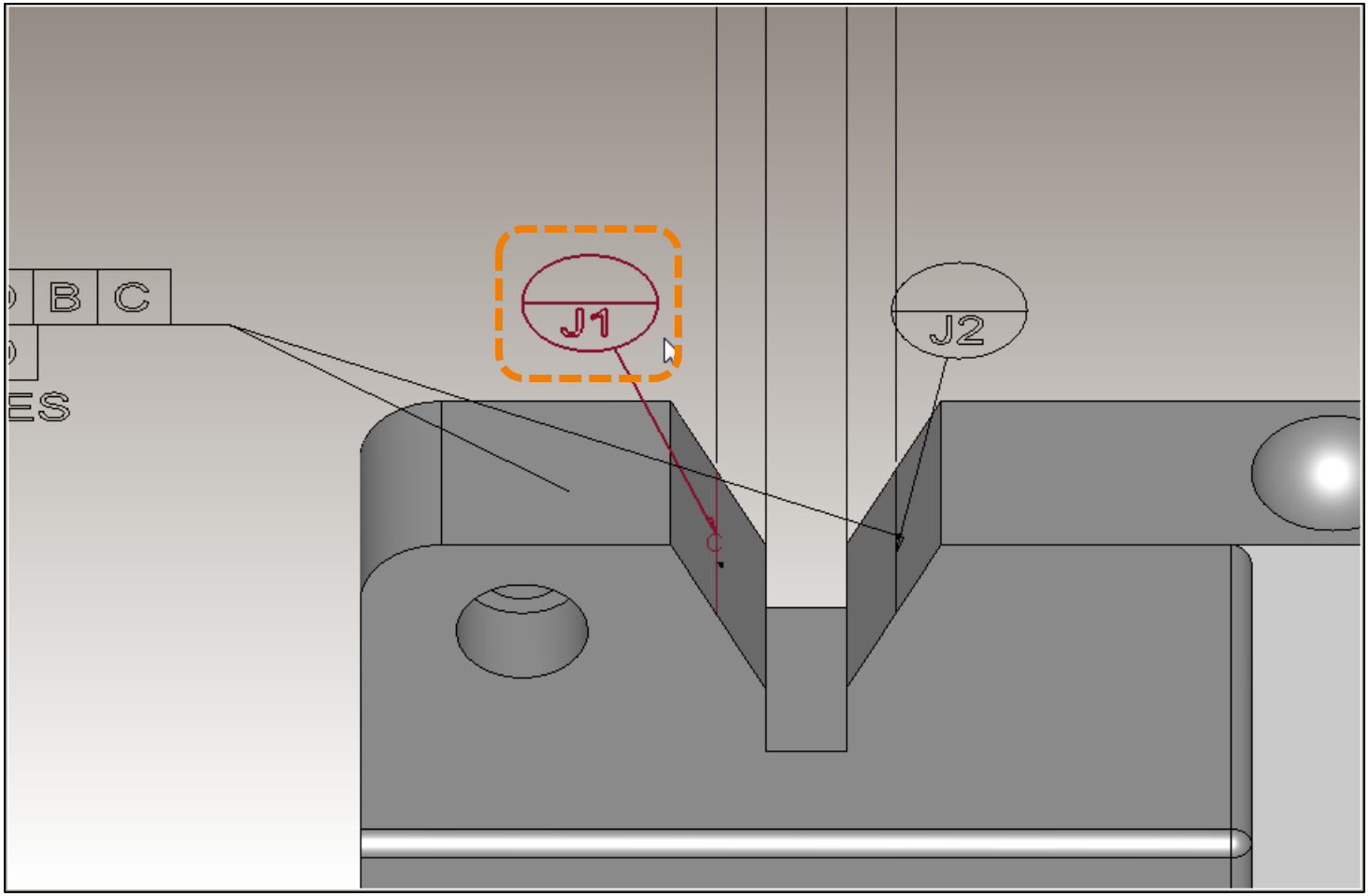

The system requires a datum feature symbol to be defined when a datum target symbol is defined. It allows the datum feature symbol to be hidden so the view appears as specified in the test case.

Return to Index

TranscenData

CAD System Style Differences for Annotation Geometry

Return to Index

Annotation Geometry: DFS edge association is extraneous

Style Difference

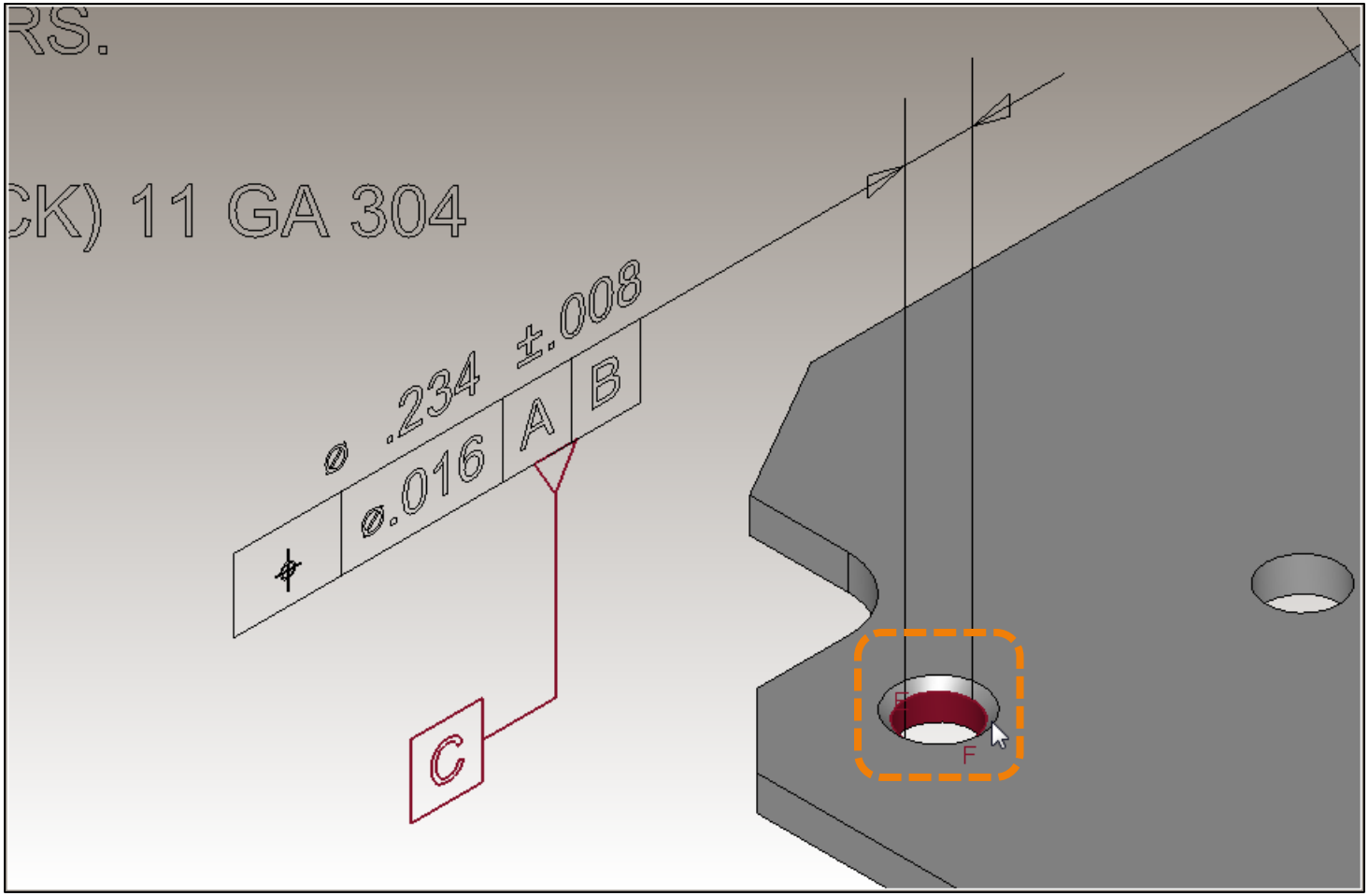

The association of this datum feature symbol with the edge of the hole is used to indicate graphical placement. It is not specified in the test case.

Return to Index

TranscenData

Annotation Geometry: DIM edge association is extraneous

Style Difference

Correct

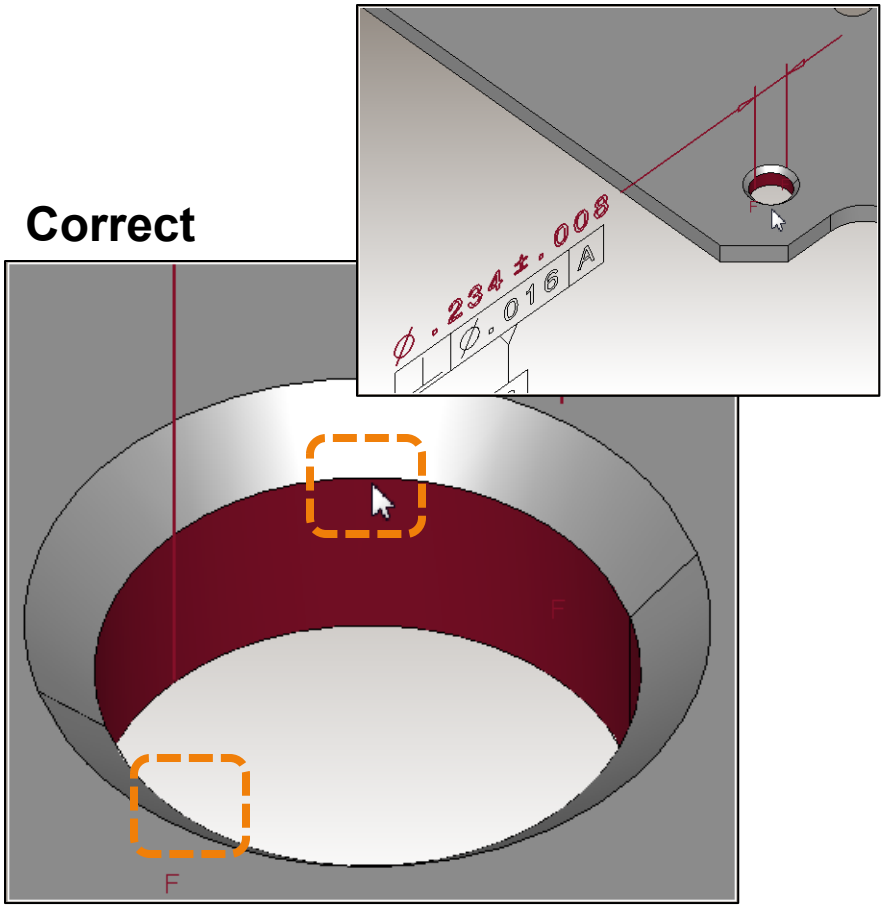

Incorrect

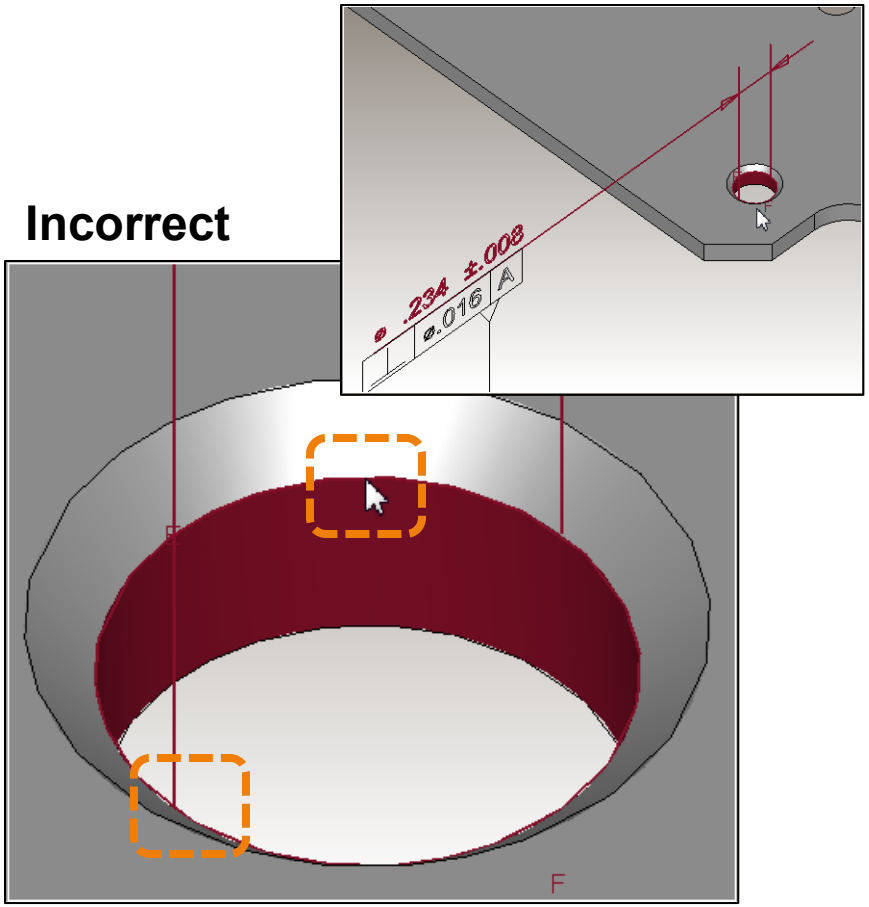

This dimension is unnecessarily associated with the edges of this hole.

Return to Index

TranscenData

Annotation Geometry: FCF edge association is extraneous

Style Difference

Correct

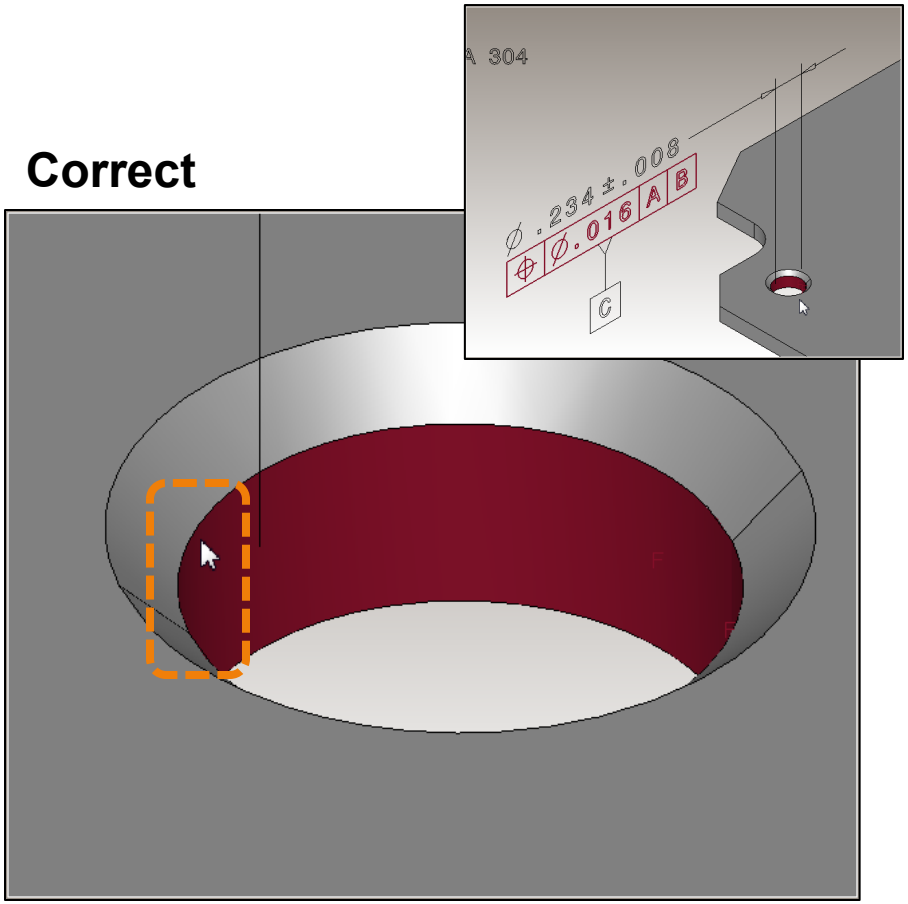

Incorrect

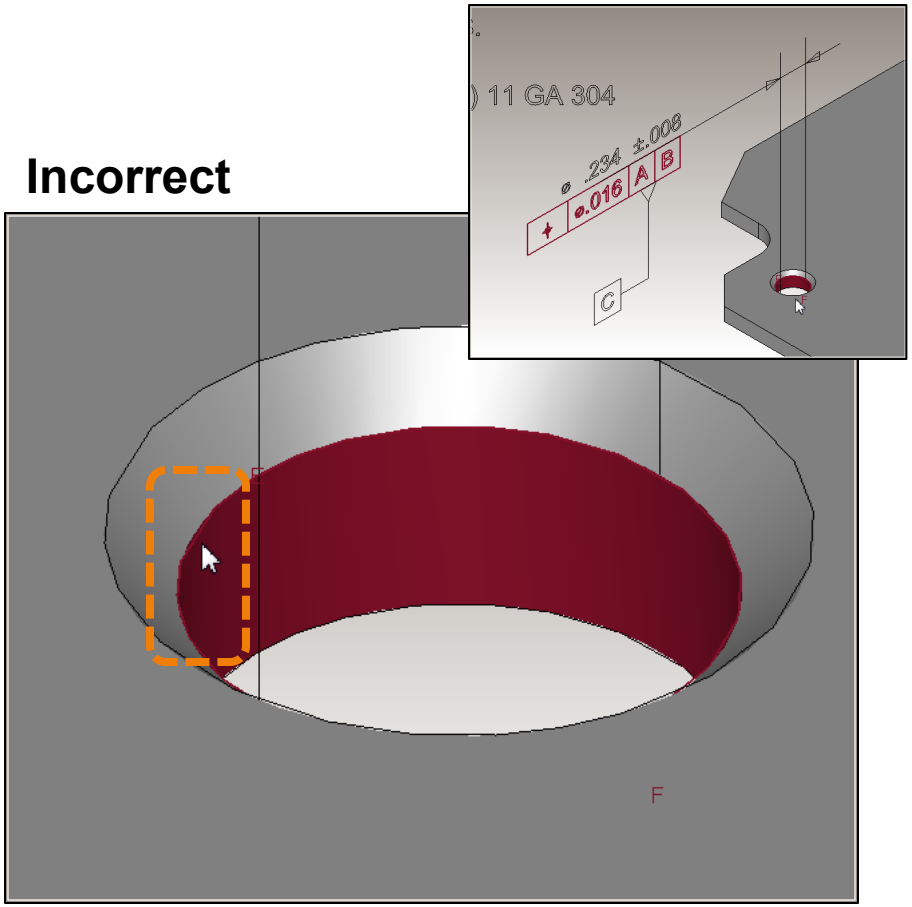

This geometric tolerance is unnecessarily associated with the edges of this hole.

Return to Index

TranscenData

CAD System Style Differences for Supplemental Geometry Structure

Return to Index

Supplemental Geometry Structure: FCF limited area is non-solid surface on solid face

Style Difference

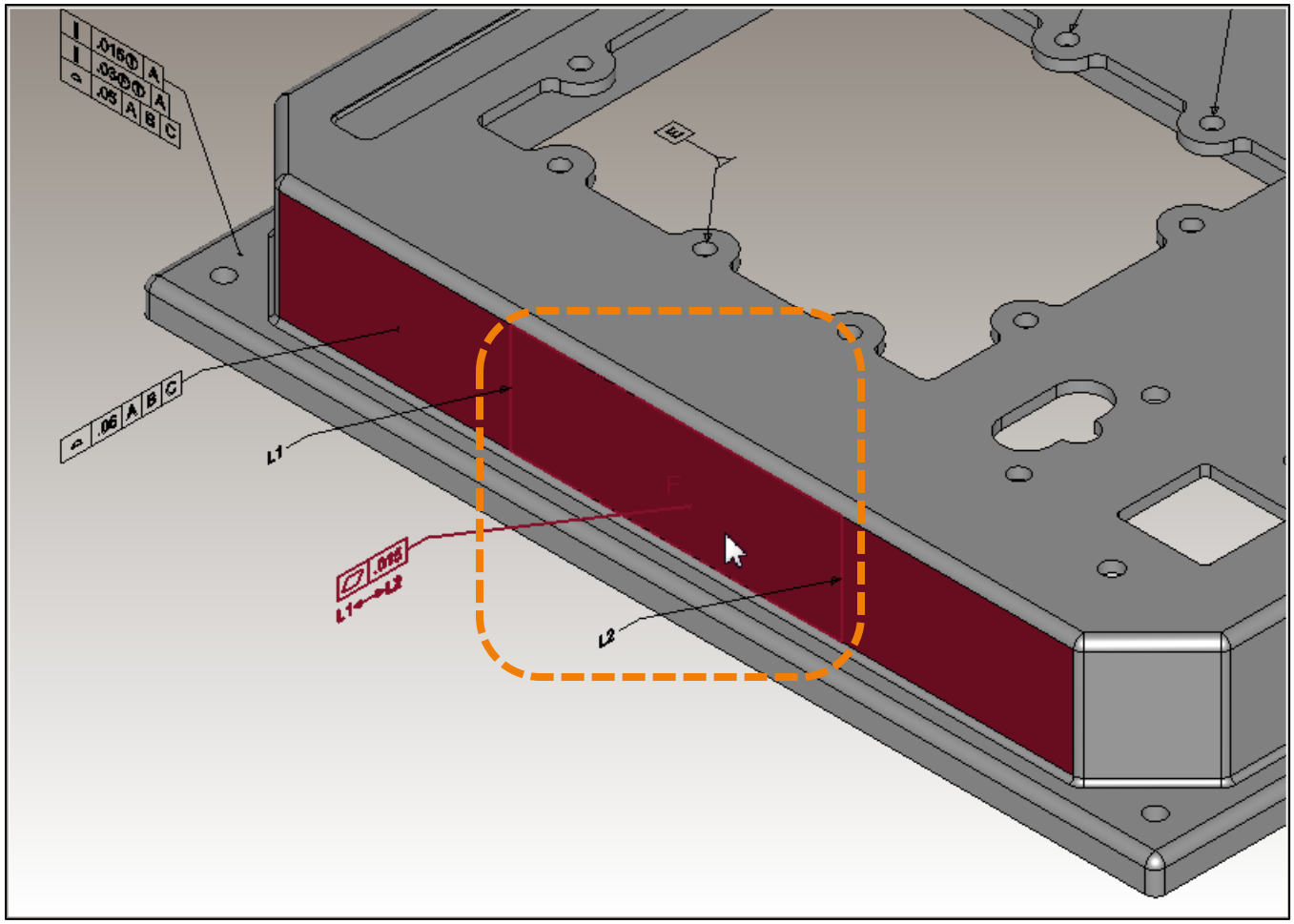

The limited area for this feature control frame is defined as a non-solid surface placed on the solid face.

Return to Index

TranscenData

Supplemental Geometry Structure: FCF limited area is subdivided solid face

Style Difference

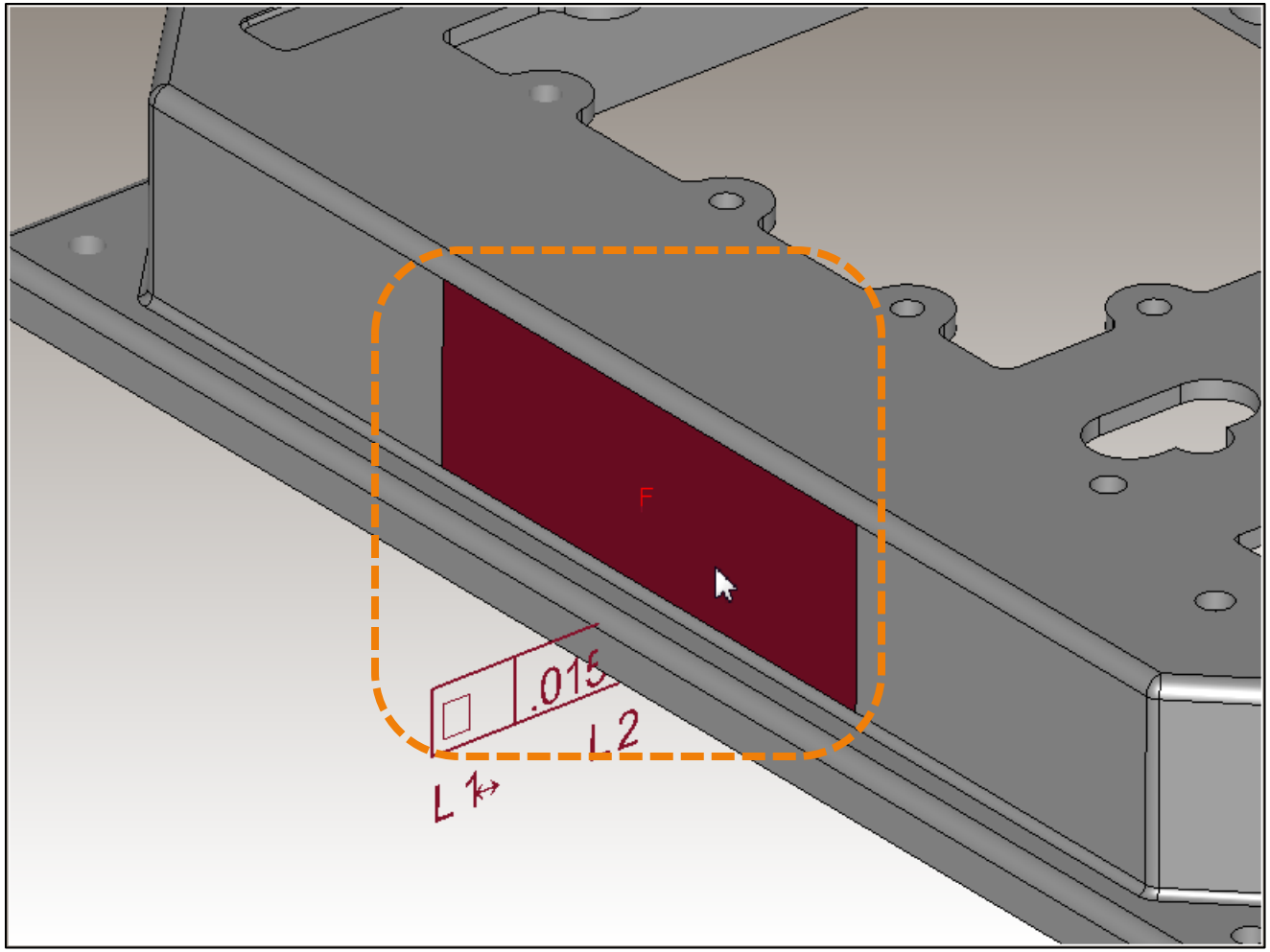

The limited area for this feature control frame is defined as a solid face that has been separated from the adjacent faces in this solid.

Return to Index

TranscenData

CAD System Presentation Limitations for Annotation Visibility

Return to Index

Annotation Visibility: DFS is extraneous when DTS is defined

Presentation Limitation

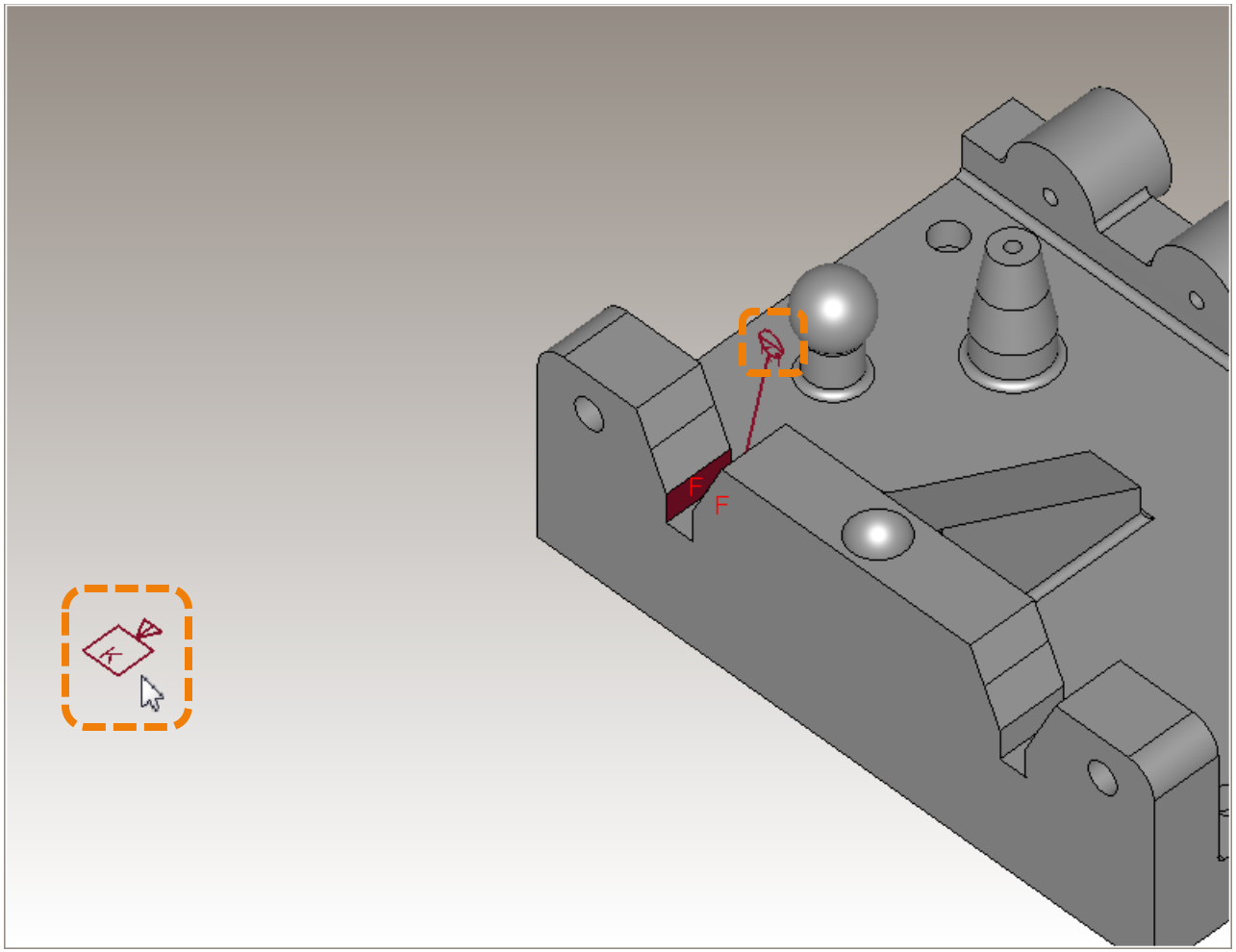

This datum feature symbol is unnecessary when a datum target symbol is defined.

Return to Index

TranscenData

CAD System Presentation Limitations for Annotation Layout

Return to Index

Annotation Layout: Counterbore DIM defined as two separate DIM's

Presentation Limitation

Test Case

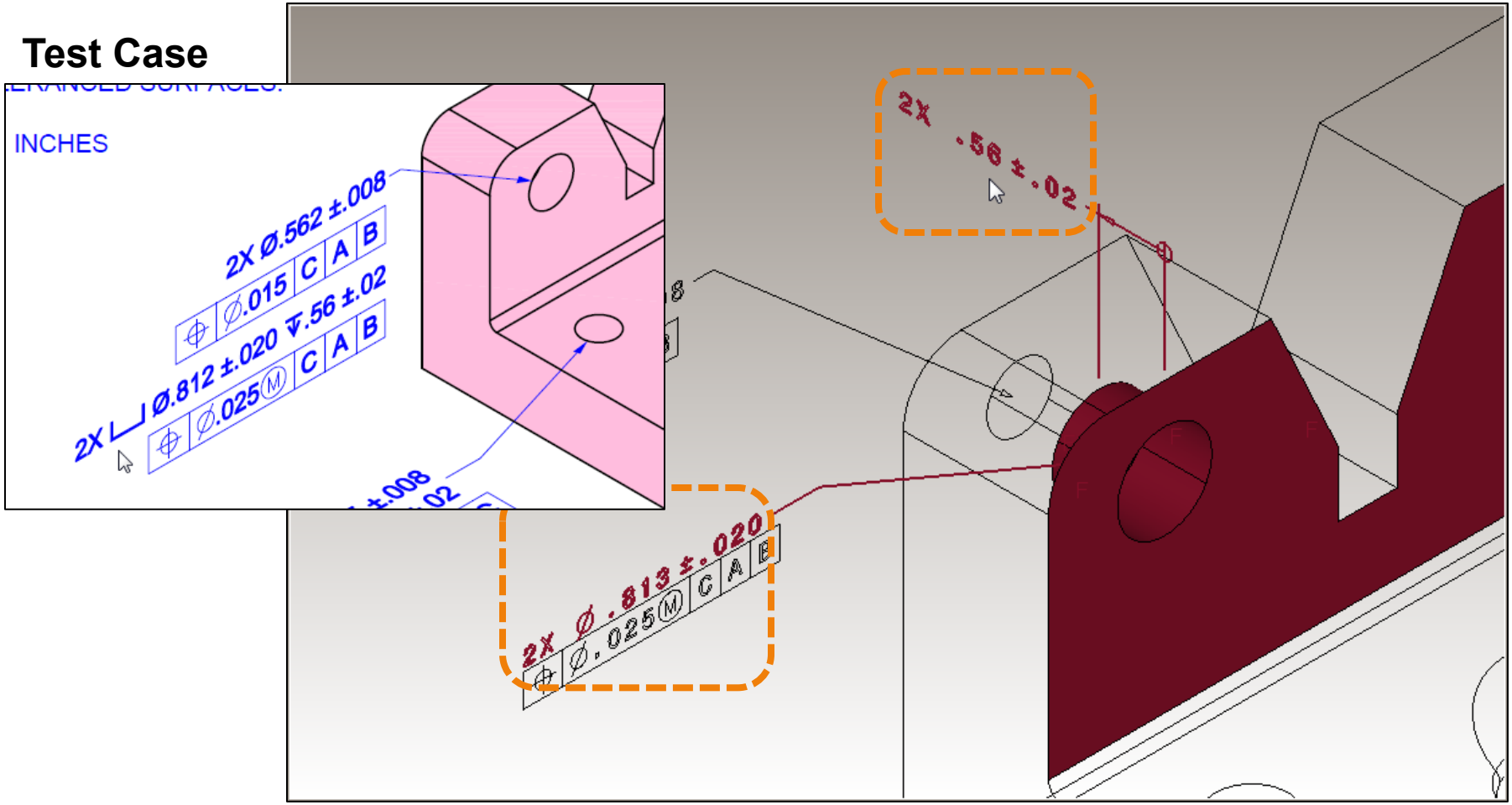

This counterbore dimension cannot be defined as a single annotation with named parameters that each have correct face associations. It must be defined as two separate dimensions.

Return to Index

TranscenData

Annotation Layout: Countersink DIM defined as two separate DIM's

Presentation Limitation

Test Case

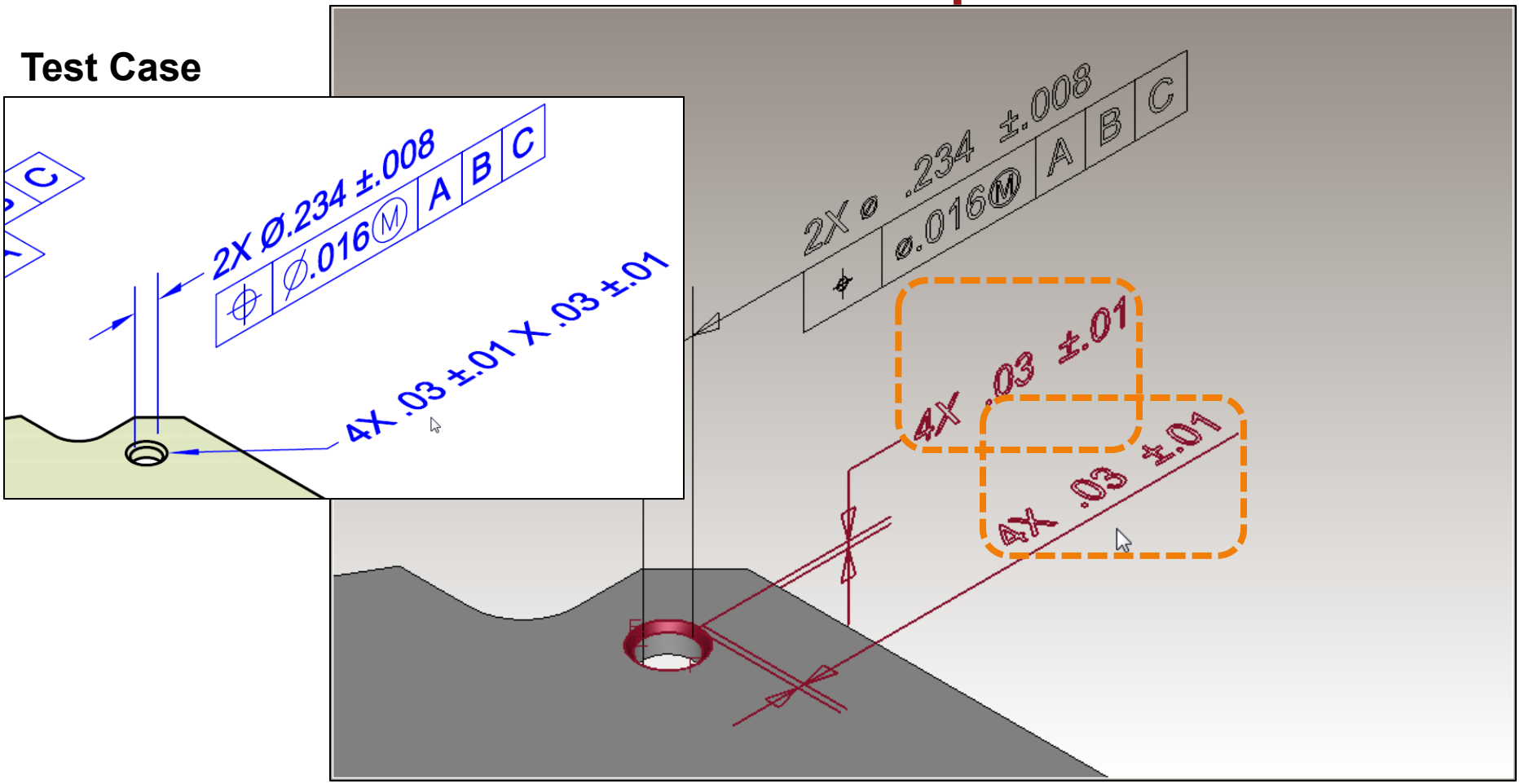

This countersink dimension cannot be defined as a single annotation with named parameters that each have correct face associations. It must be defined as two separate dimensions.

Return to Index

TranscenData

Annotation Layout: DIM dual dimension bracket size very small

Presentation Limitation

Correct

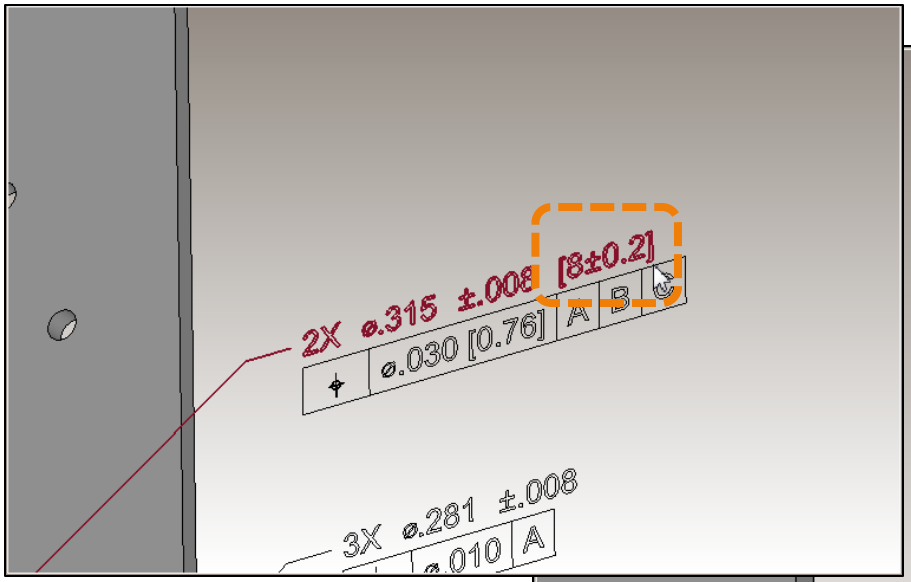

Incorrect

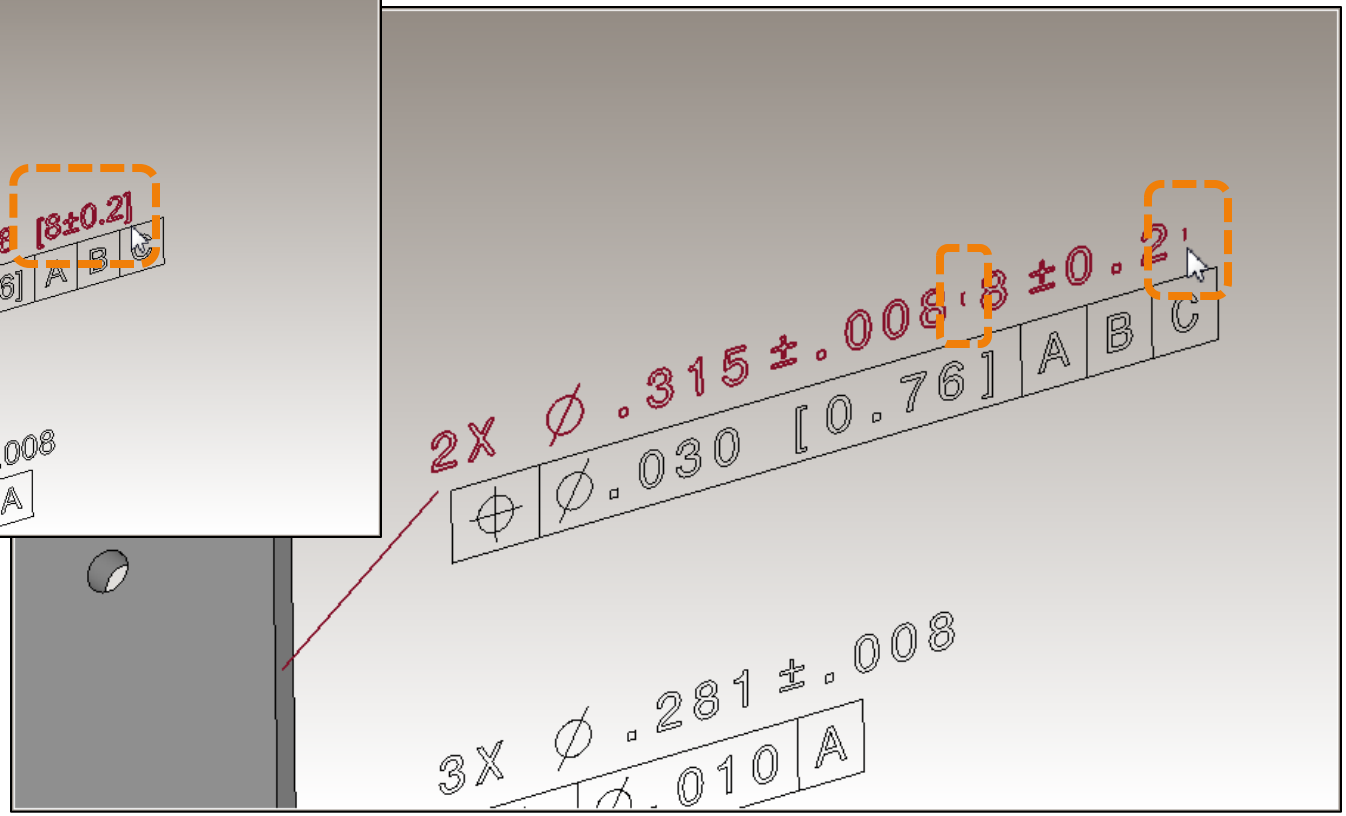

The brackets on this dimension are very small relative to the text height.

Return to Index

TranscenData

Annotation Layout: DIM dual dimension position is incorrect

Presentation Limitation

Correct

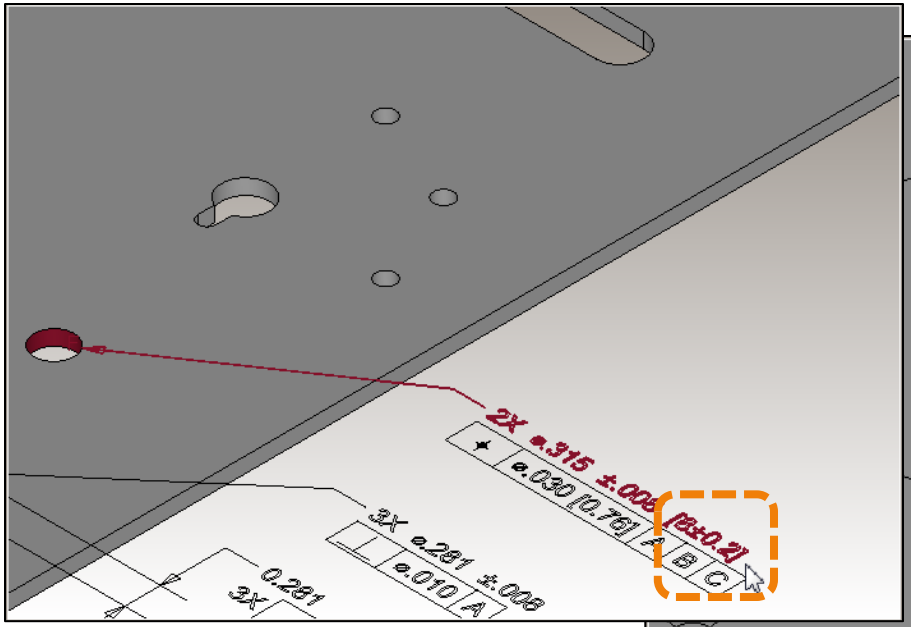

Incorrect

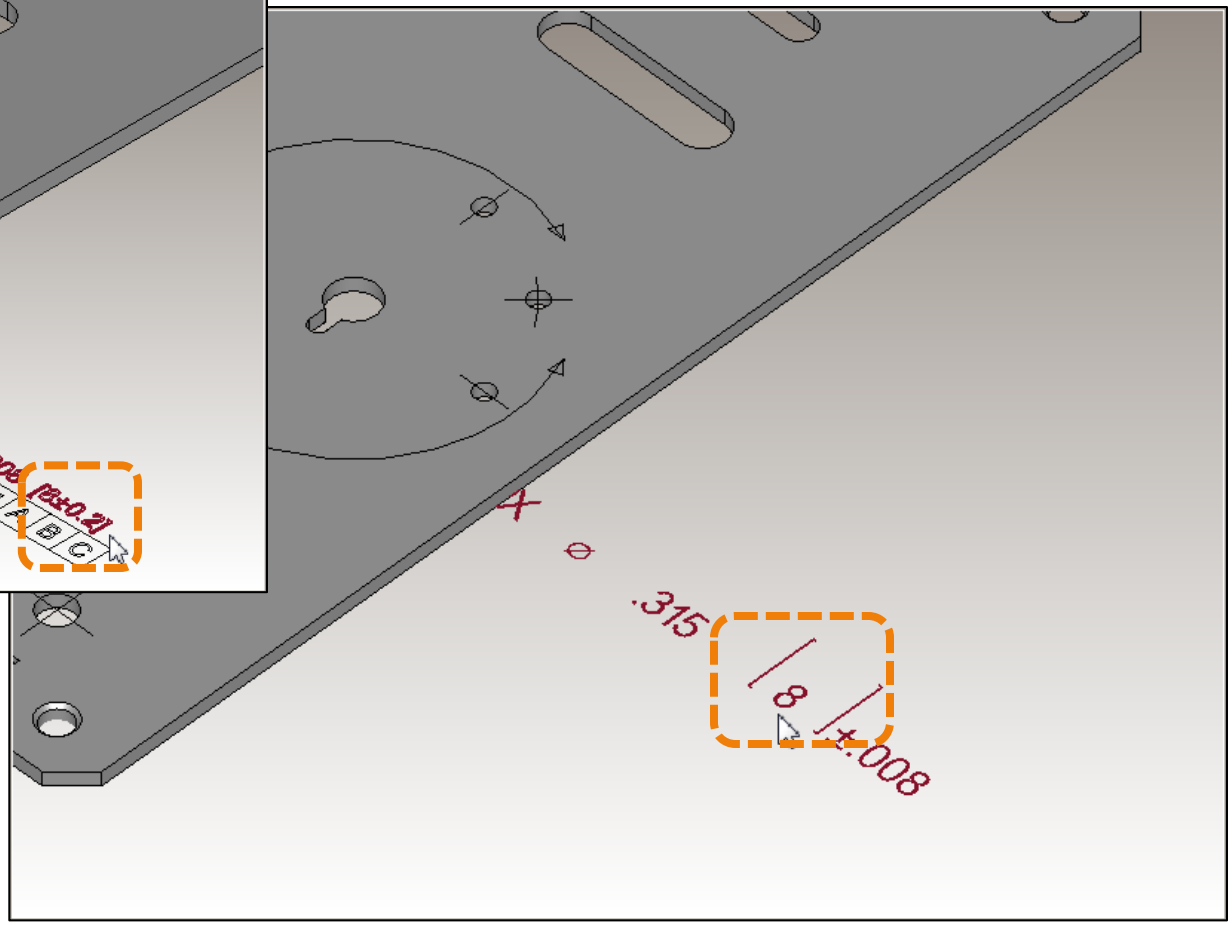

This dual dimension is inserted between the primary nominal dimension and its tolerance.

Return to Index

TranscenData

Annotation Layout: DIM not stacked correctly

Presentation Limitation

Test Case

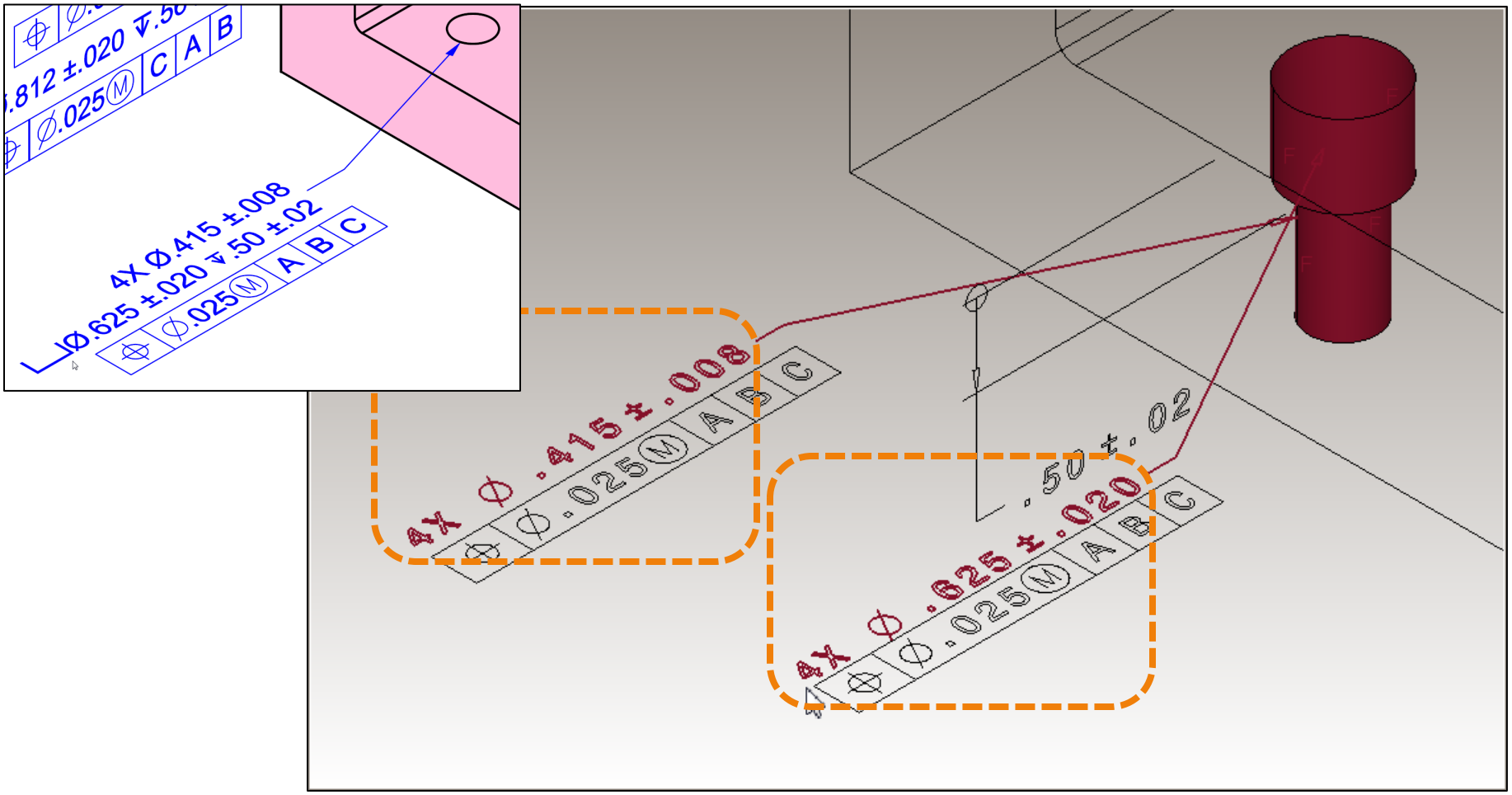

These hole and counterbore dimensions are not combined as specified.

Return to Index

ITI TranscenData

Annotation Layout: DIM text misaligned

Presentation Limitation

Test Case

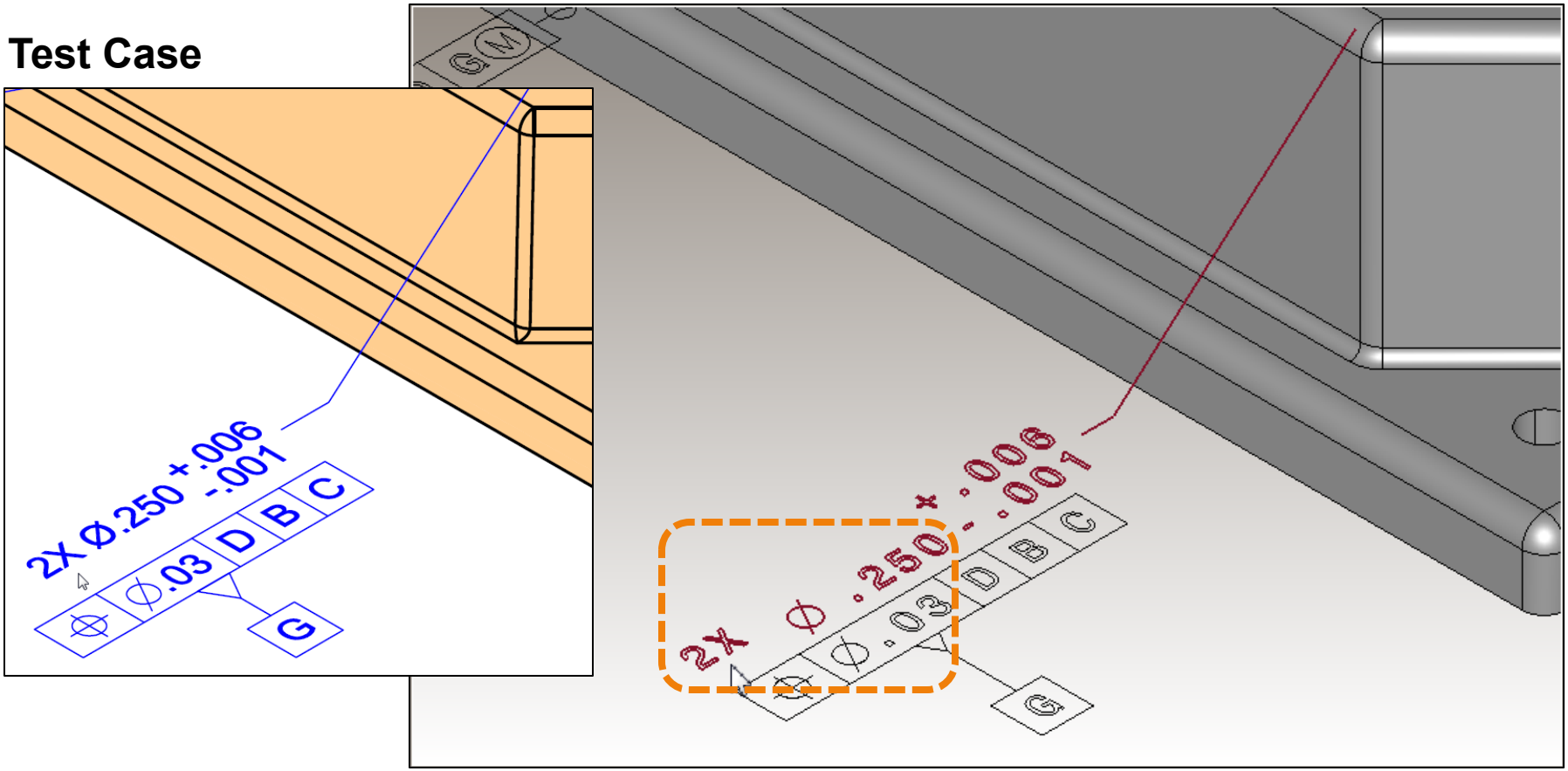

The text for the nominal value of this dimension is not aligned as specified.

Return to Index

TranscenData

Annotation Layout:
FCF defined separate from general note text

Presentation Limitation

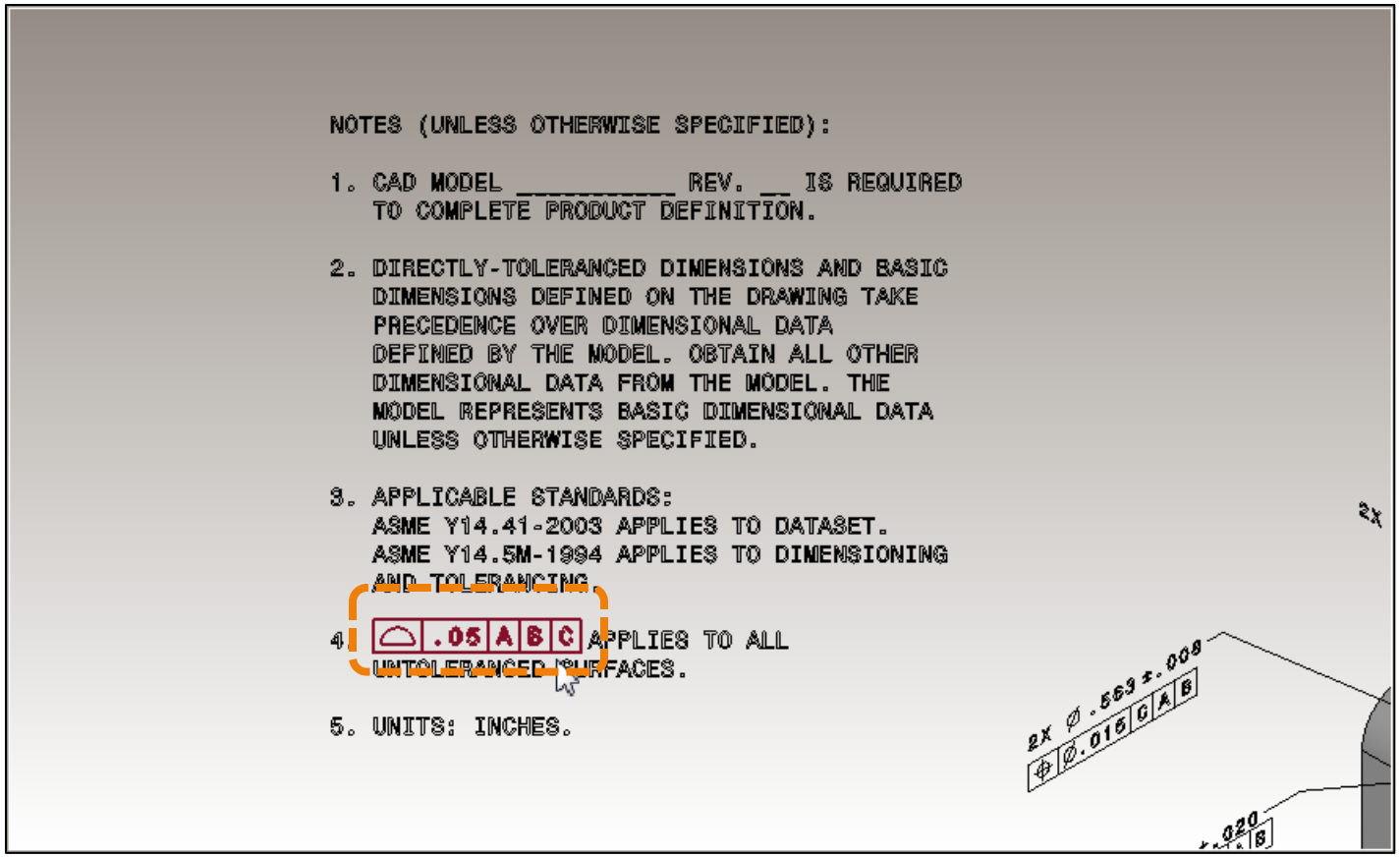

This geometric tolerance is defined as a separate entity from the general notes.

Return to Index

TranscenData

Annotation Layout: FCF instance count not in front

Presentation Limitation

Test Case

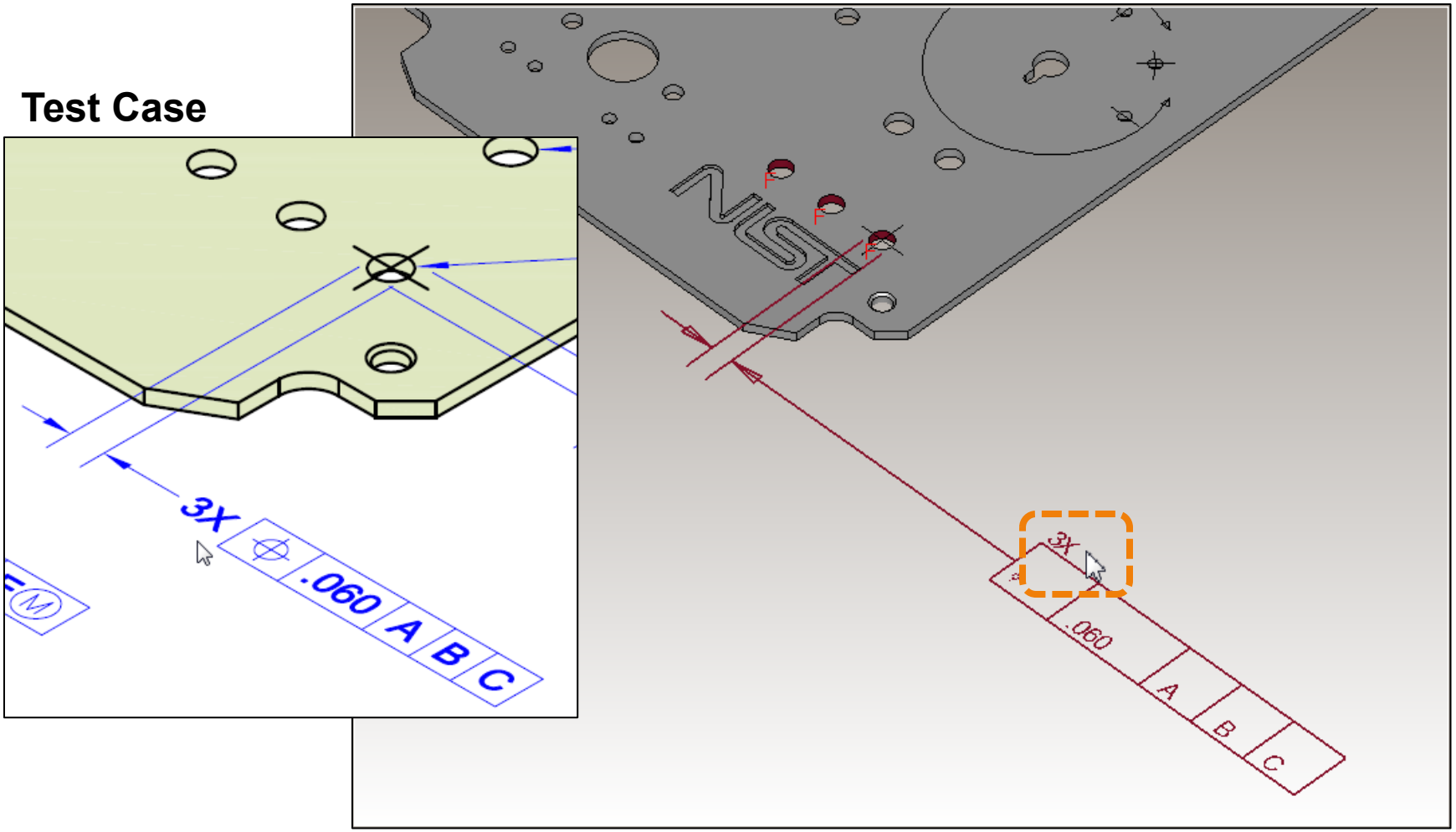

This instance count is not in the specified location.

Return to Index

TranscenData

Annotation Layout: FCF modifiers reversed

Presentation Limitation

Test Case

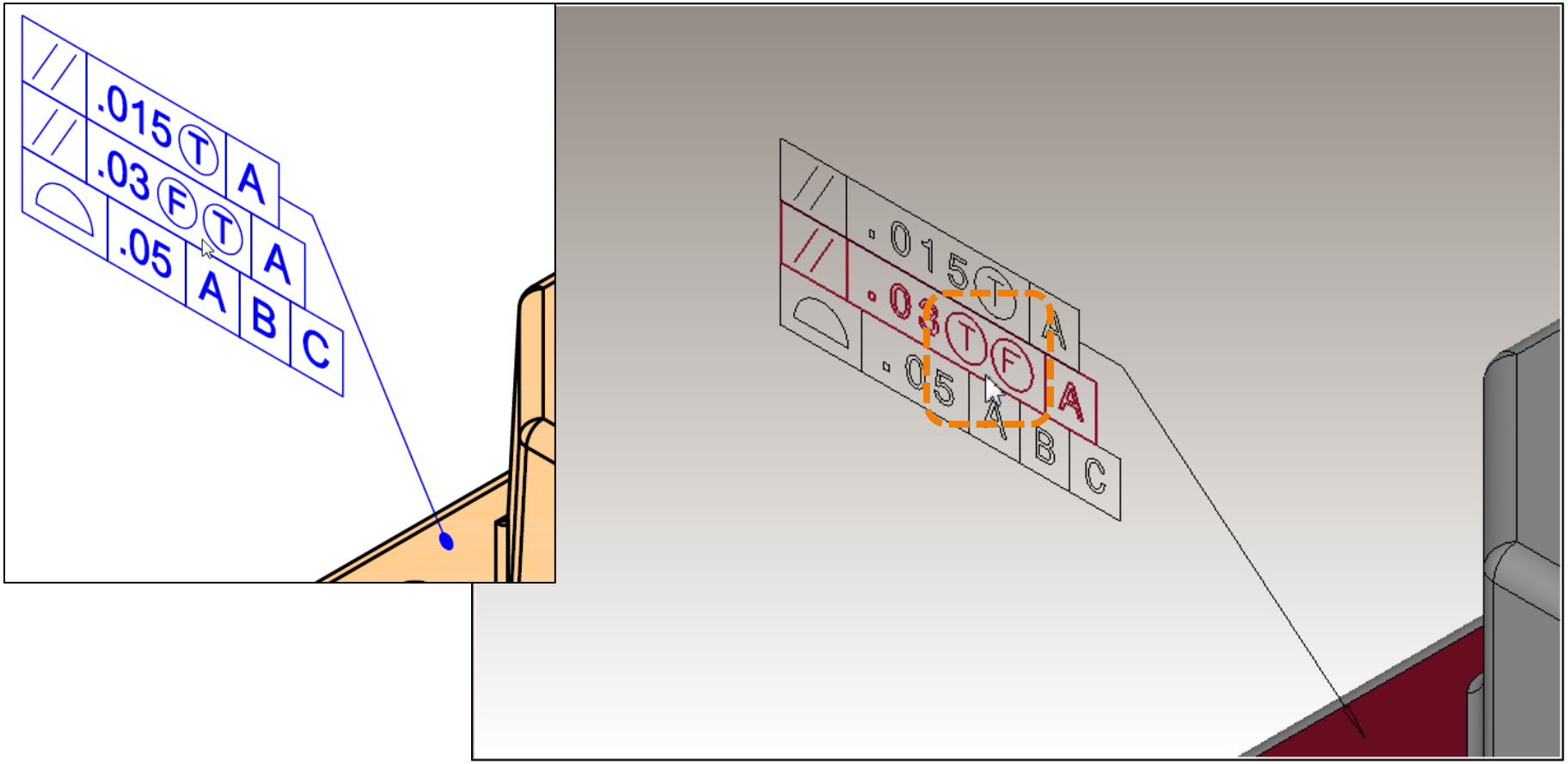

The order of these feature control frame modifiers is reversed from the specification.

Return to Index

TranscenData

Annotation Layout: FCF stack order reversed

Presentation Limitation

Test Case

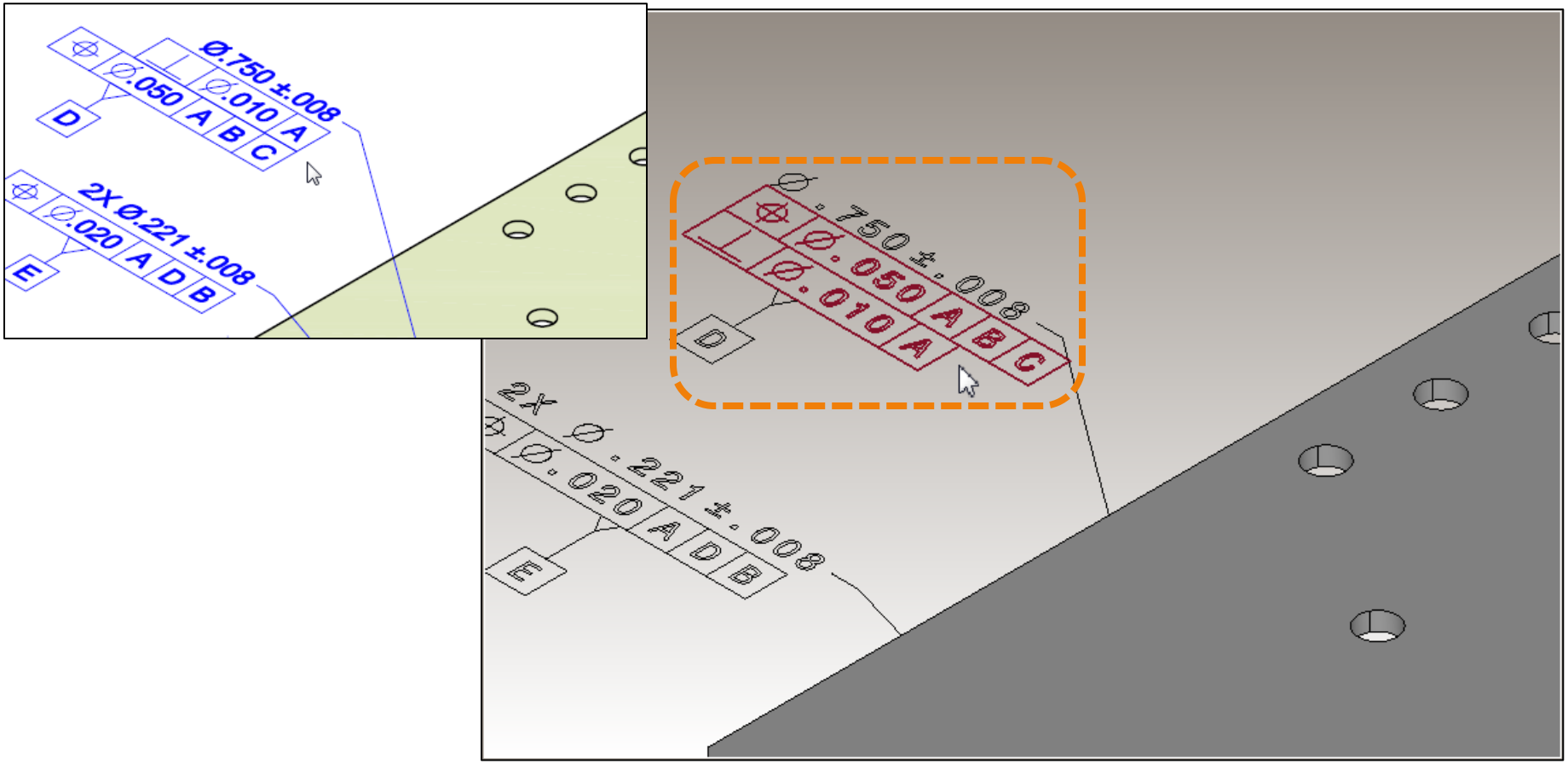

These feature control frames are not stacked as specified.

Return to Index

ITI TranscenData

Annotation Layout:
Hole DIM defined as two separate DIM's

Presentation Limitation

Test Case

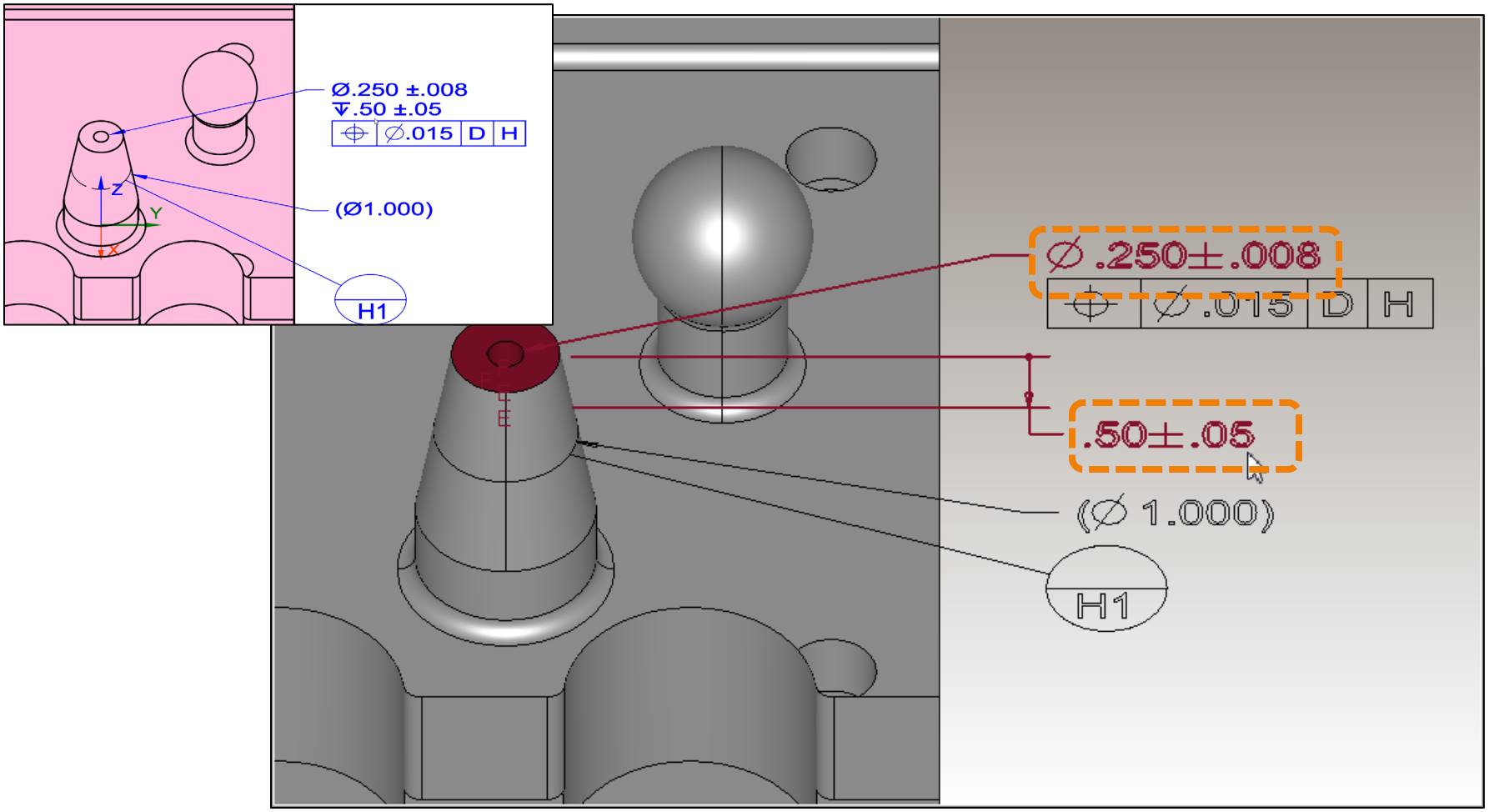

This hole dimension is defined using two separate dimensions.

Return to Index

TranscenData

Annotation Layout:
Slot DIM defined as two separate DIMS

Presentation Limitation

Test Case

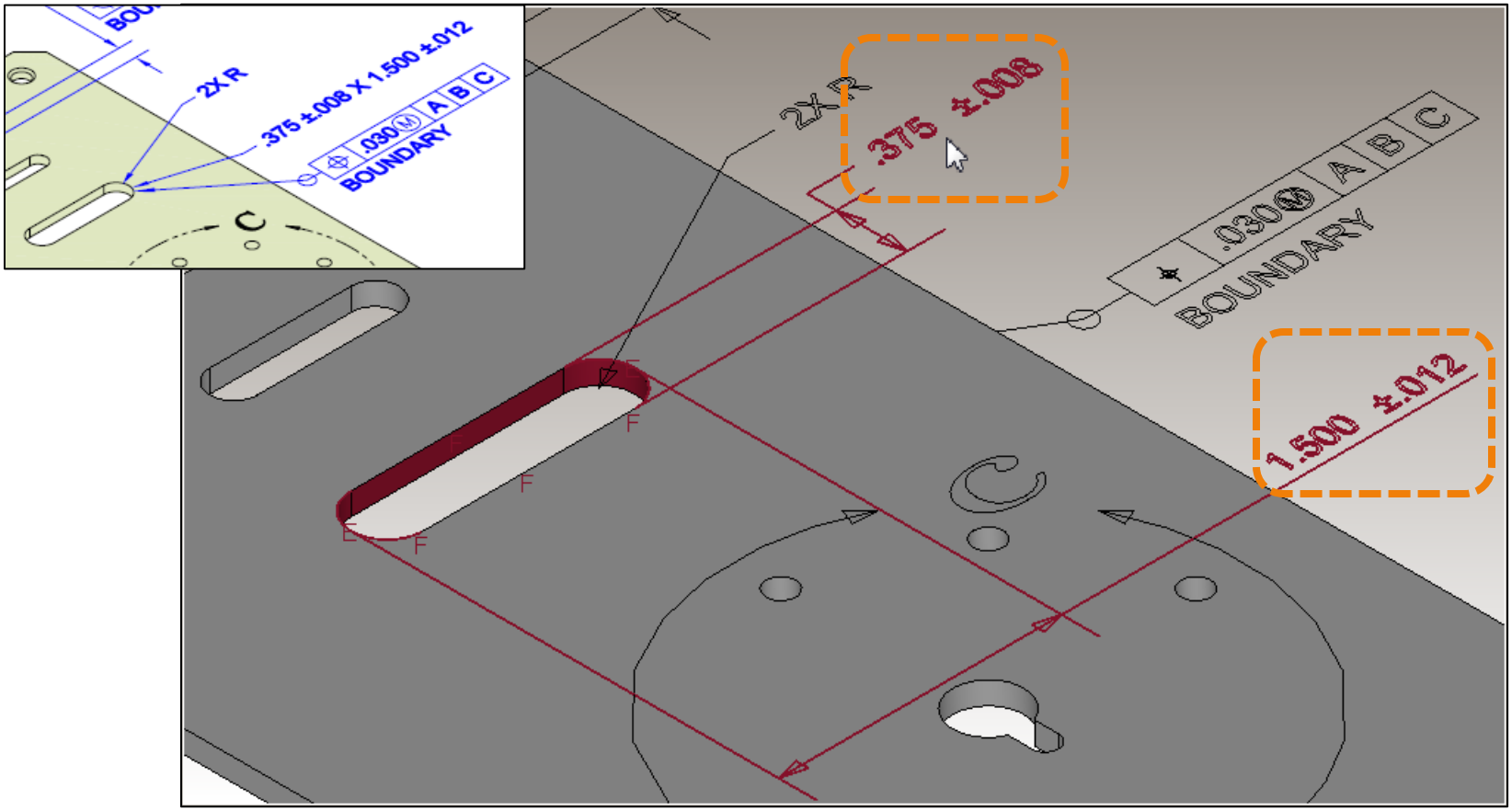

This slot dimension is defined using two separate dimensions.

Return to Index

TranscenData

CAD System Presentation Limitations for Annotation Location

Return to Index

Annotation Location: DFS not attached to FCF

Presentation Limitation

Attached

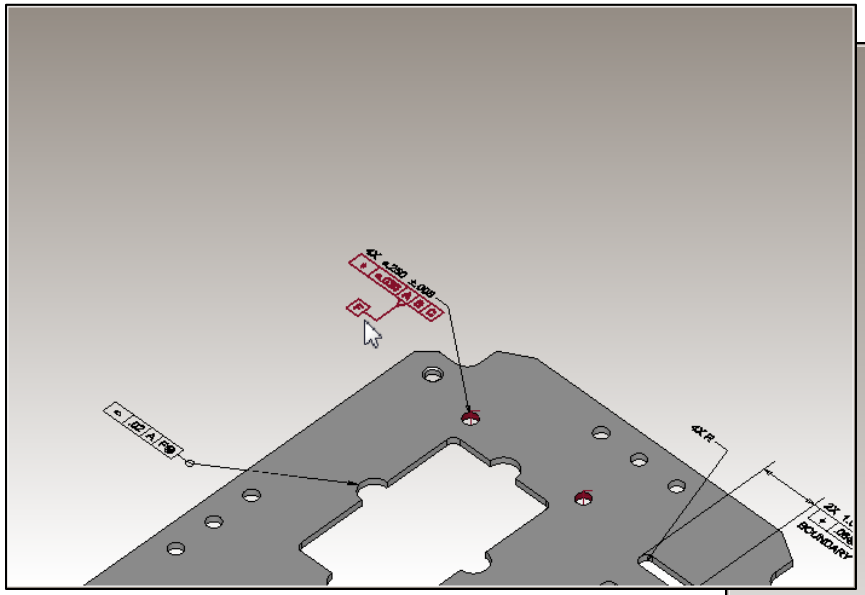

Not Attached

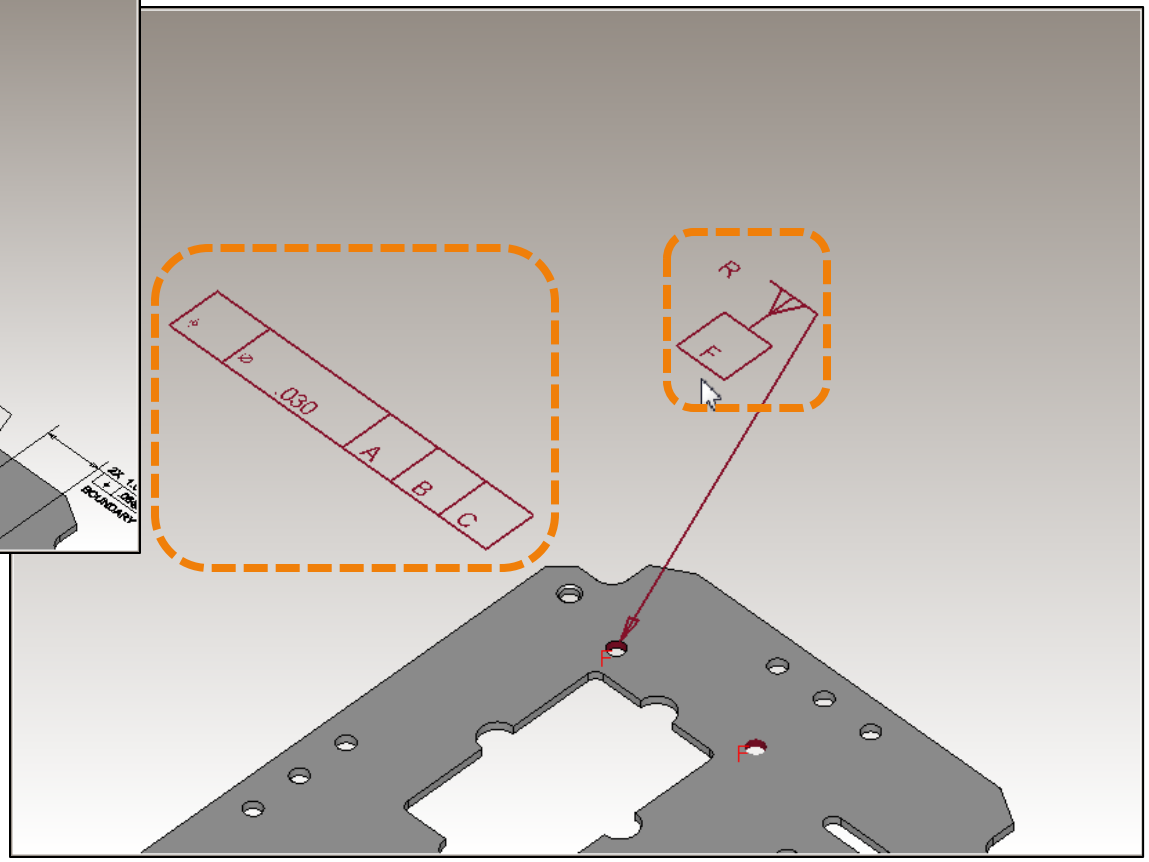

This datum feature symbol is not attached to the associated feature control frame for this hole pattern.

Return to Index

TranscenData

Annotation Location: FCF not attached to DIM

Presentation Limitation

Test Case

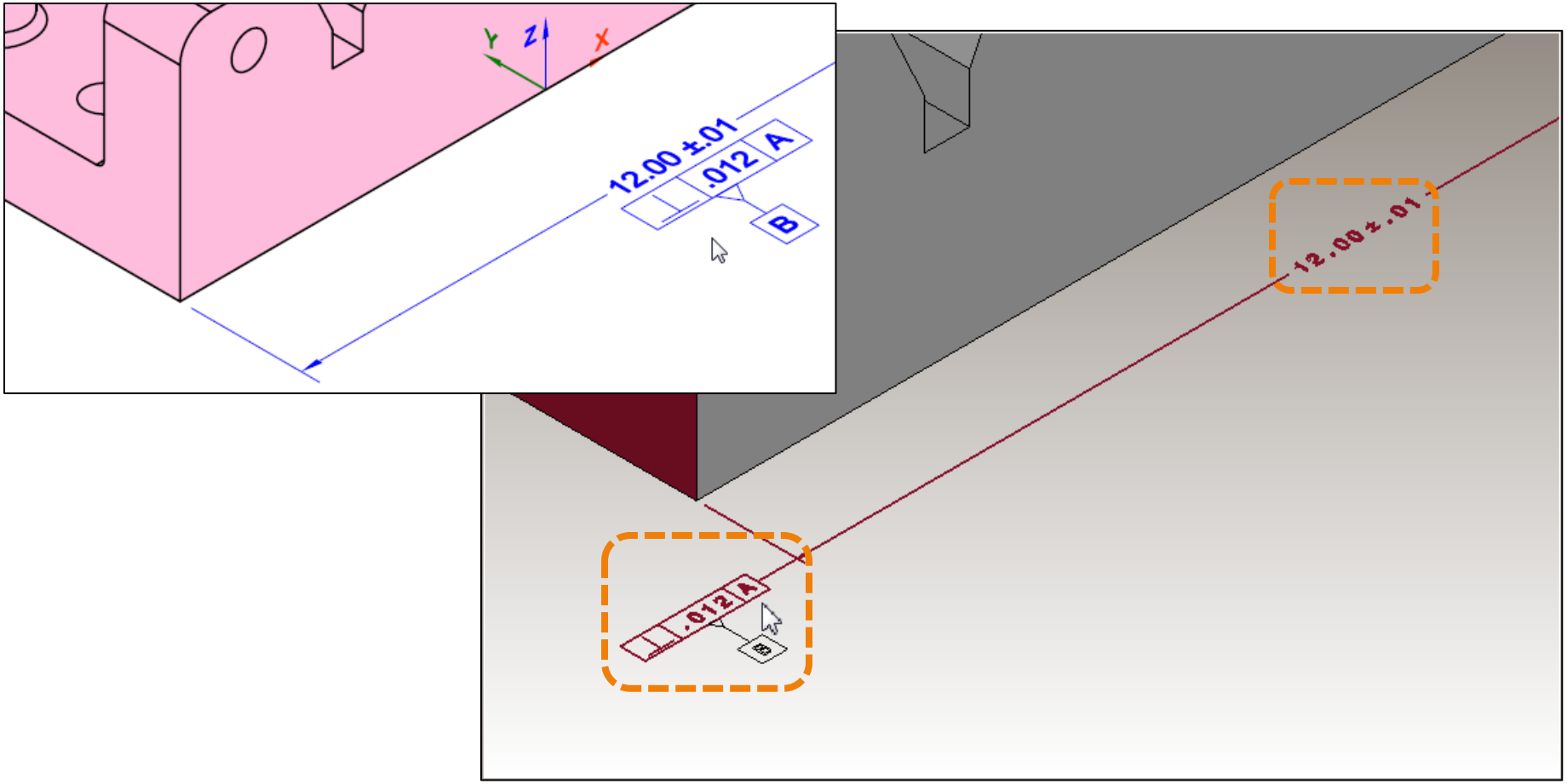

This feature control frame is not attached to it's associated dimension.

Return to Index

TranscenData

CAD System Presentation Limitations for Annotation Orientation

Return to Index

ITI TranscenData

Annotation Orientation: DIM view plane rotated

Presentation Limitation

Test Case

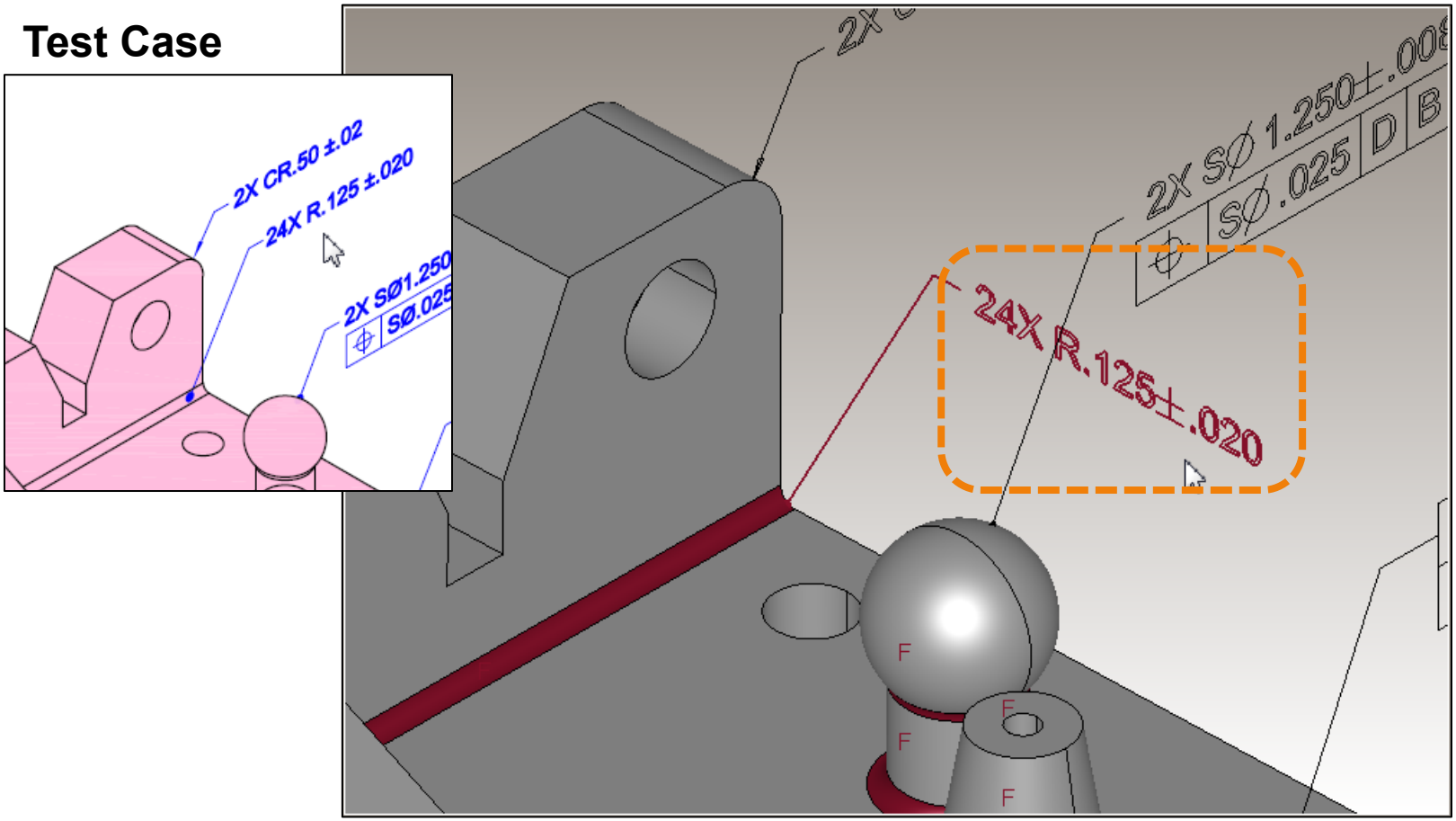

This dimension is not oriented as specified.

Return to Index

TranscenData

Annotation Orientation: FCF view plane rotated

Presentation Limitation

Test Case

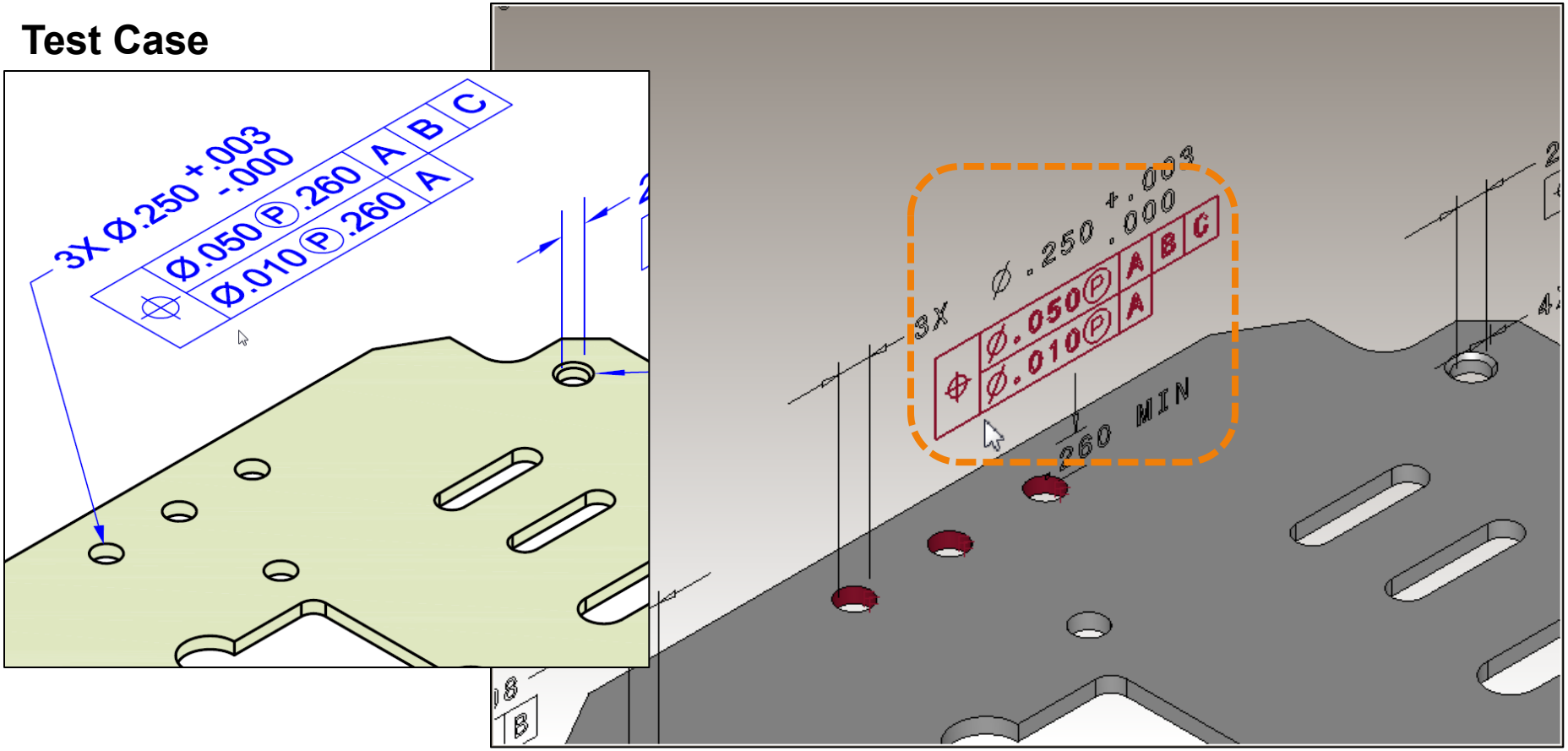

This feature control frame is not oriented as specified.

Return to Index

TranscenData

CAD System Presentation Limitations for Annotation Lines

Return to Index

Annotation Lines: DFS missing extension line

Presentation Limitation

Test Case

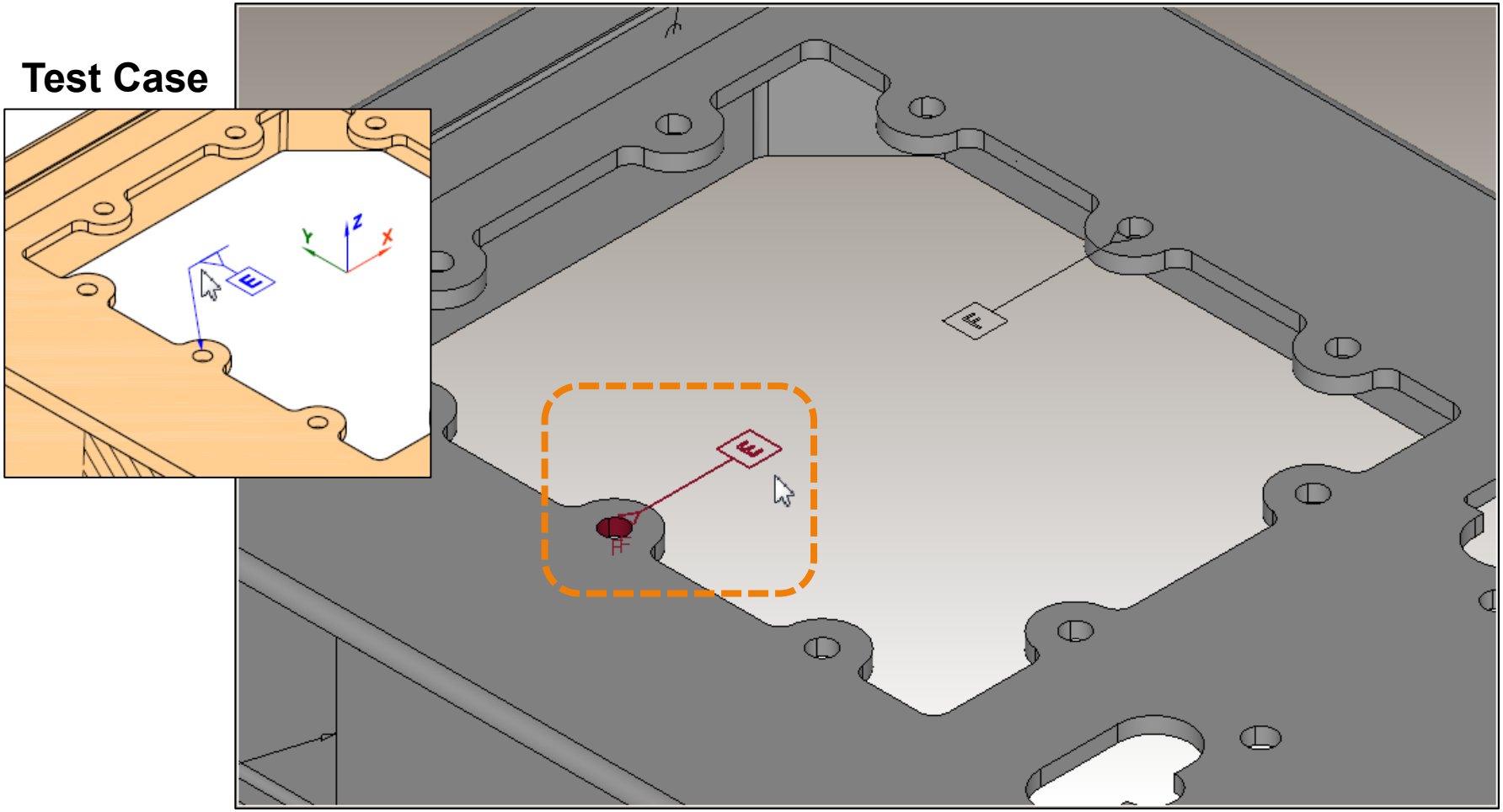

This datum feature symbol does not have the specified extension line.

Return to Index

TranscenData

Annotation Lines: DIM leader line is extraneous

Presentation Limitation

Correct

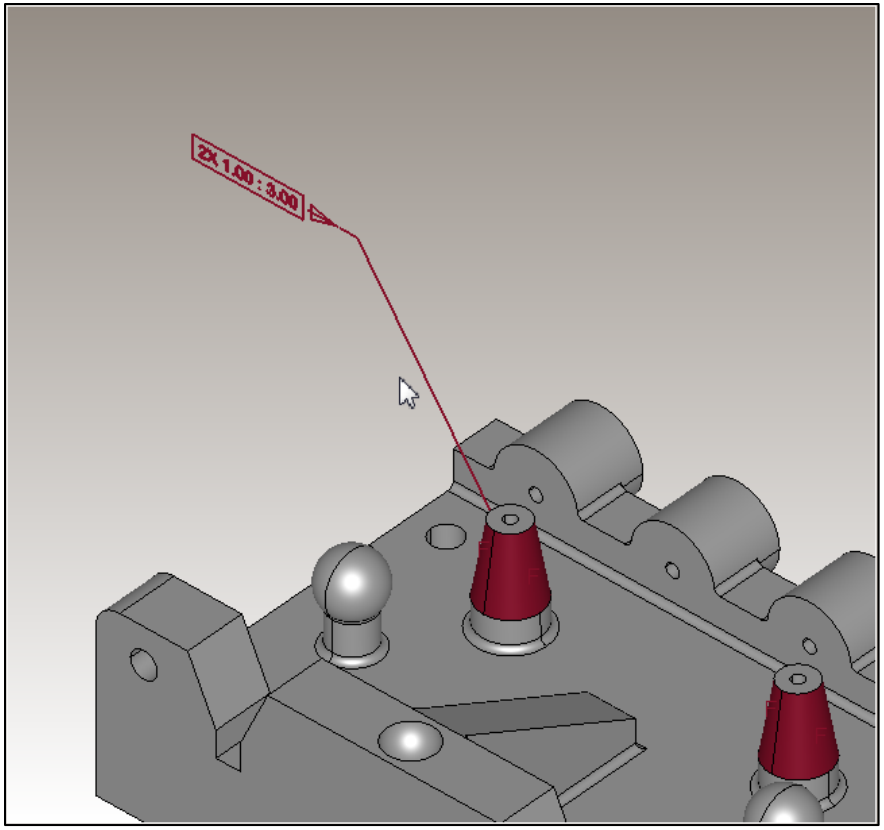

Incorrect

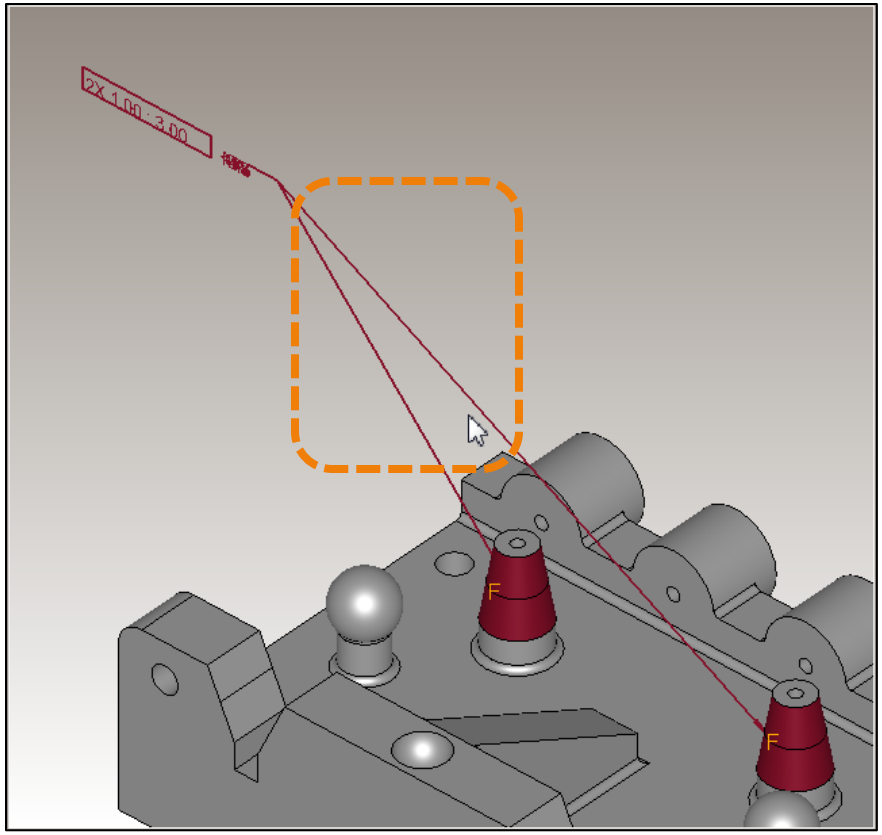

This dimension has an extra leader line that is not specified.

Return to Index

TranscenData

Annotation Lines: FCF divider line cuts through symbol

Presentation Limitation

Test Case

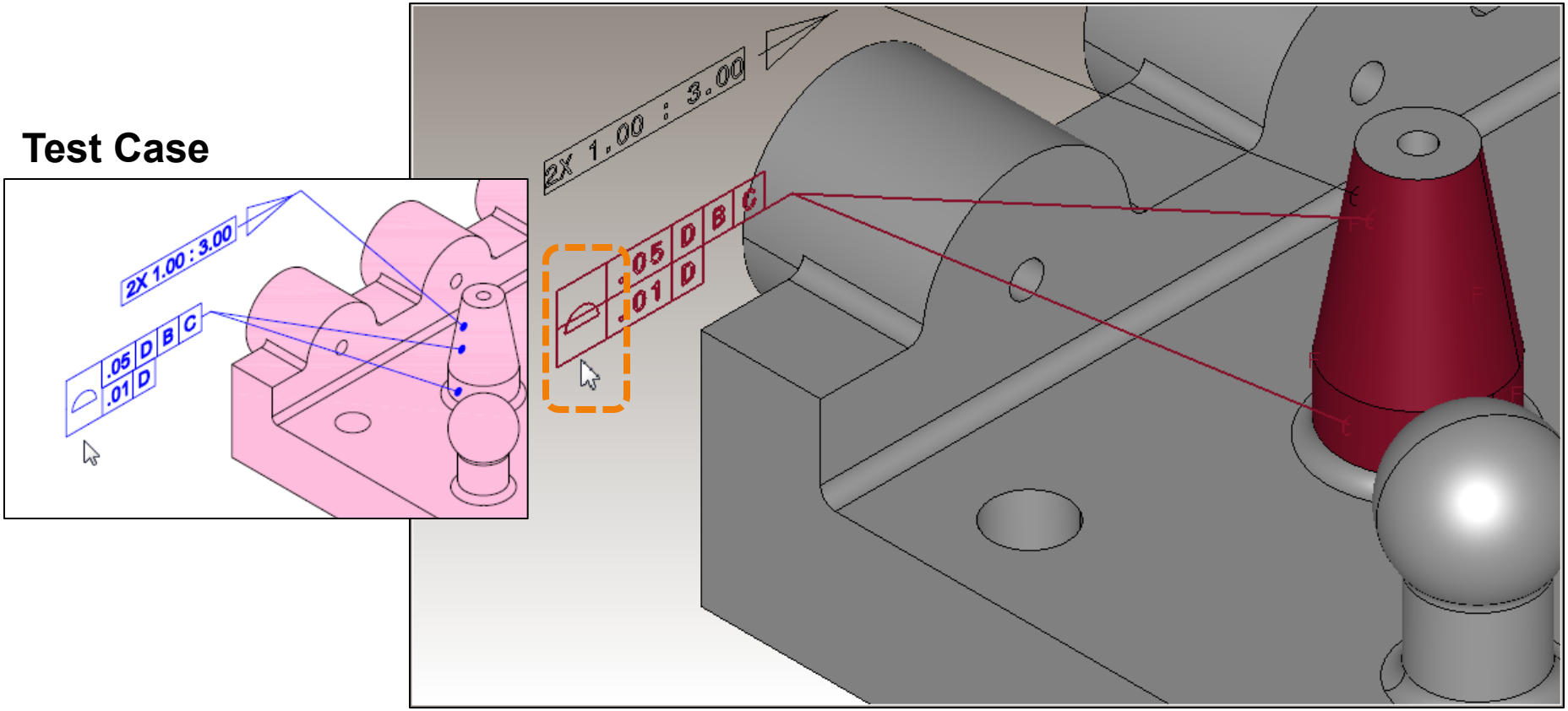

The divider line of this feature control frame runs through the tolerance symbol.

Return to Index

ITI TranscenData

Annotation Lines: FCF leader line passes through FCF

Presentation Limitation

Test Case

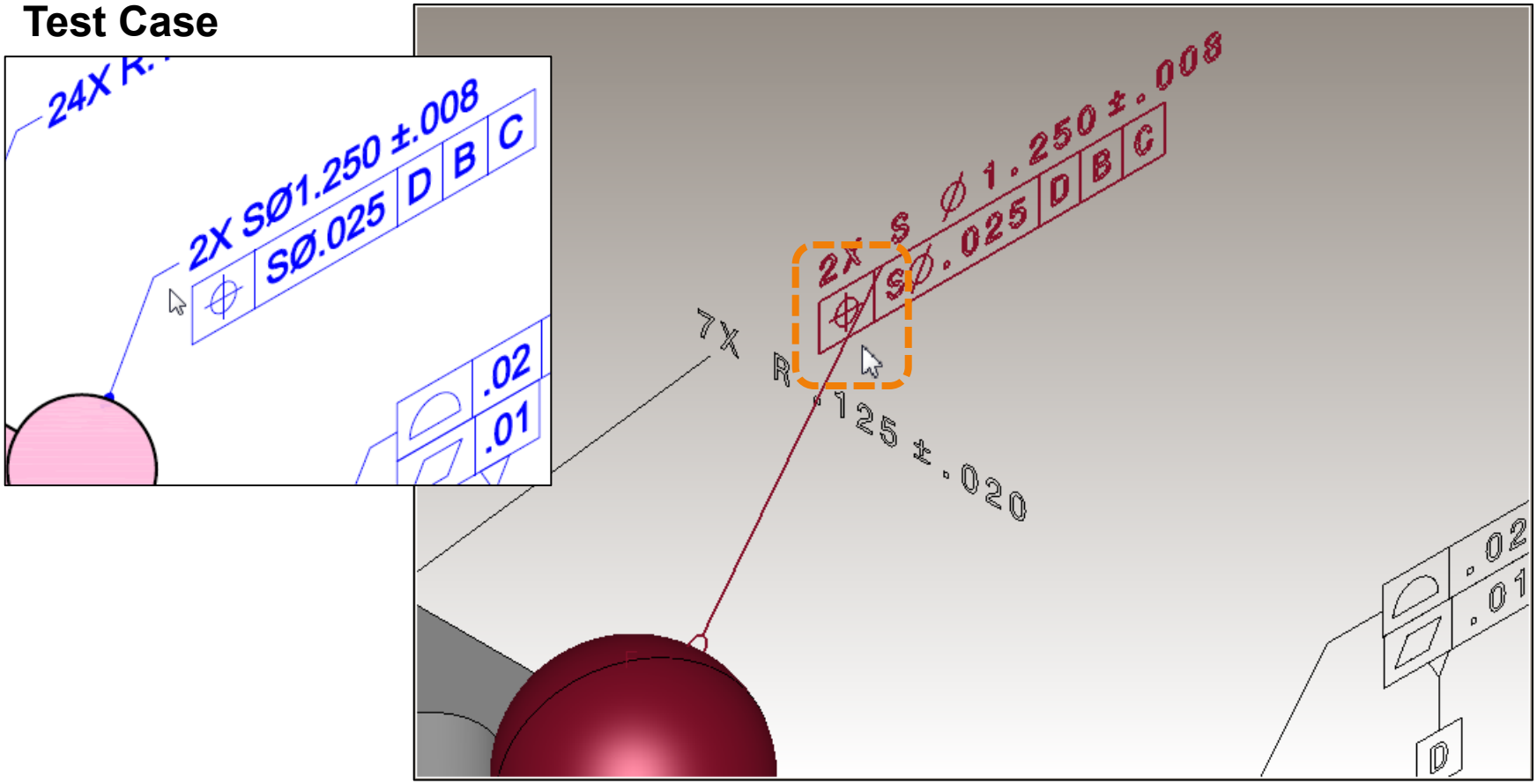

The leader line for this annotation stack passes through the feature control frame.

Return to Index

TranscenData

Annotation Lines: FCF missing dual leader lines

Presentation Limitation

Test Case

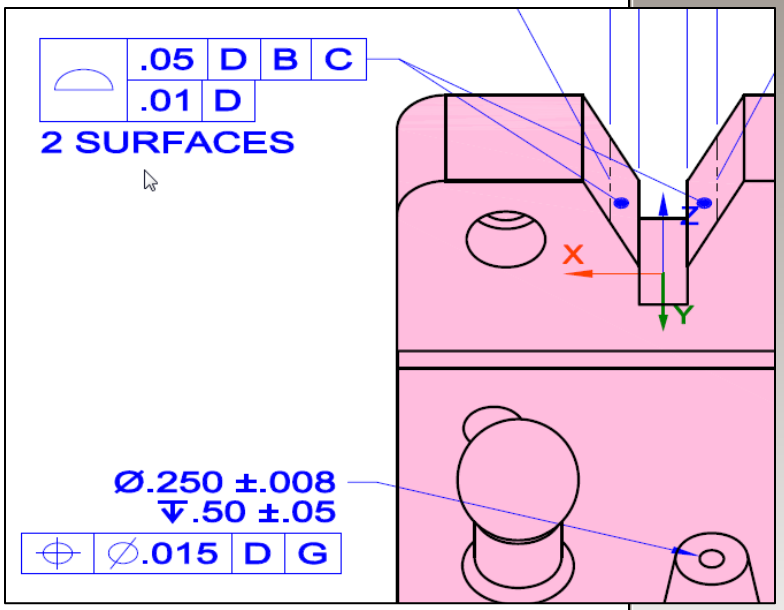

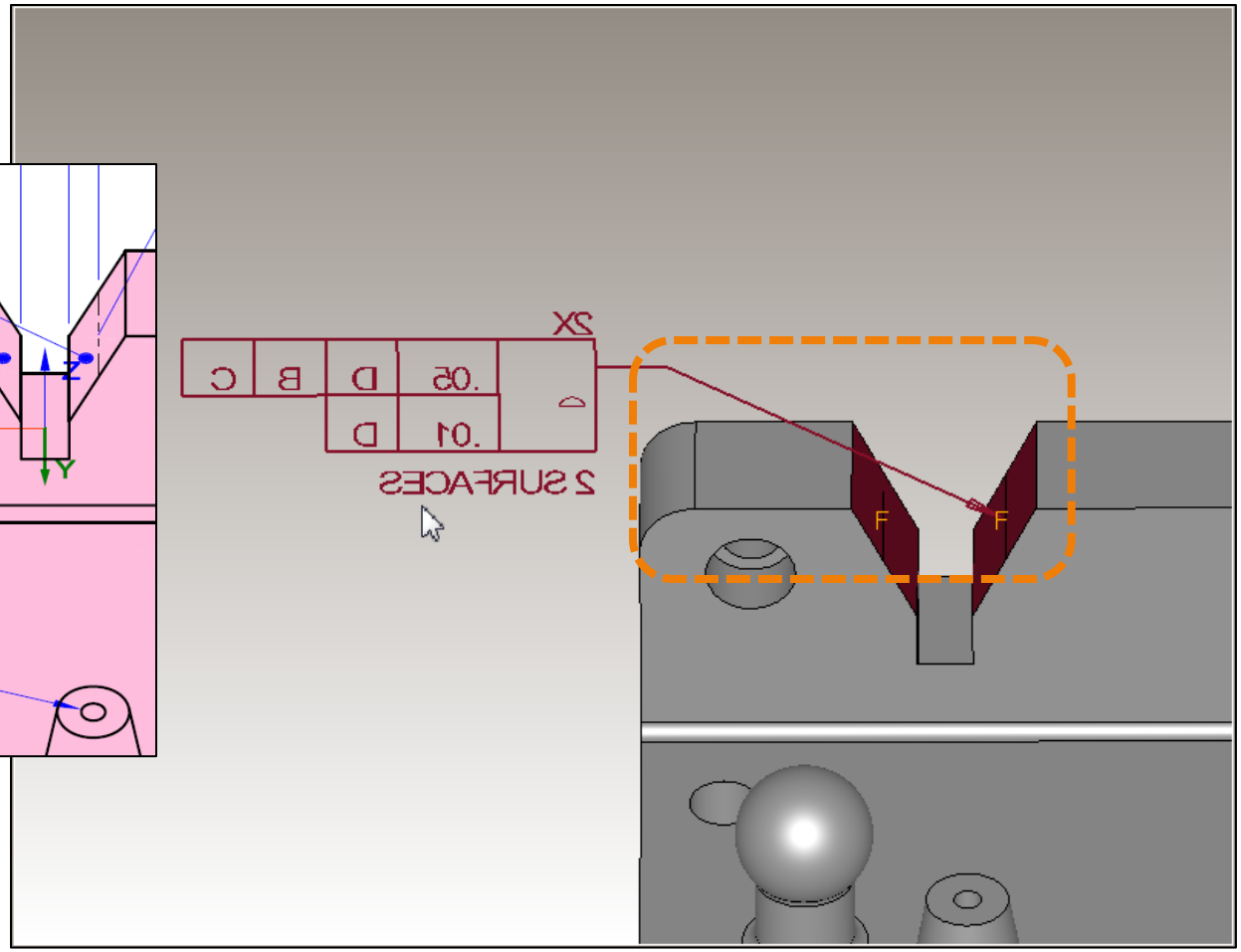

This feature control frame is missing a second leader line.

Return to Index

TranscenData

Annotation Lines:
FCF radial extension lines defined as SG curves

Presentation Limitation

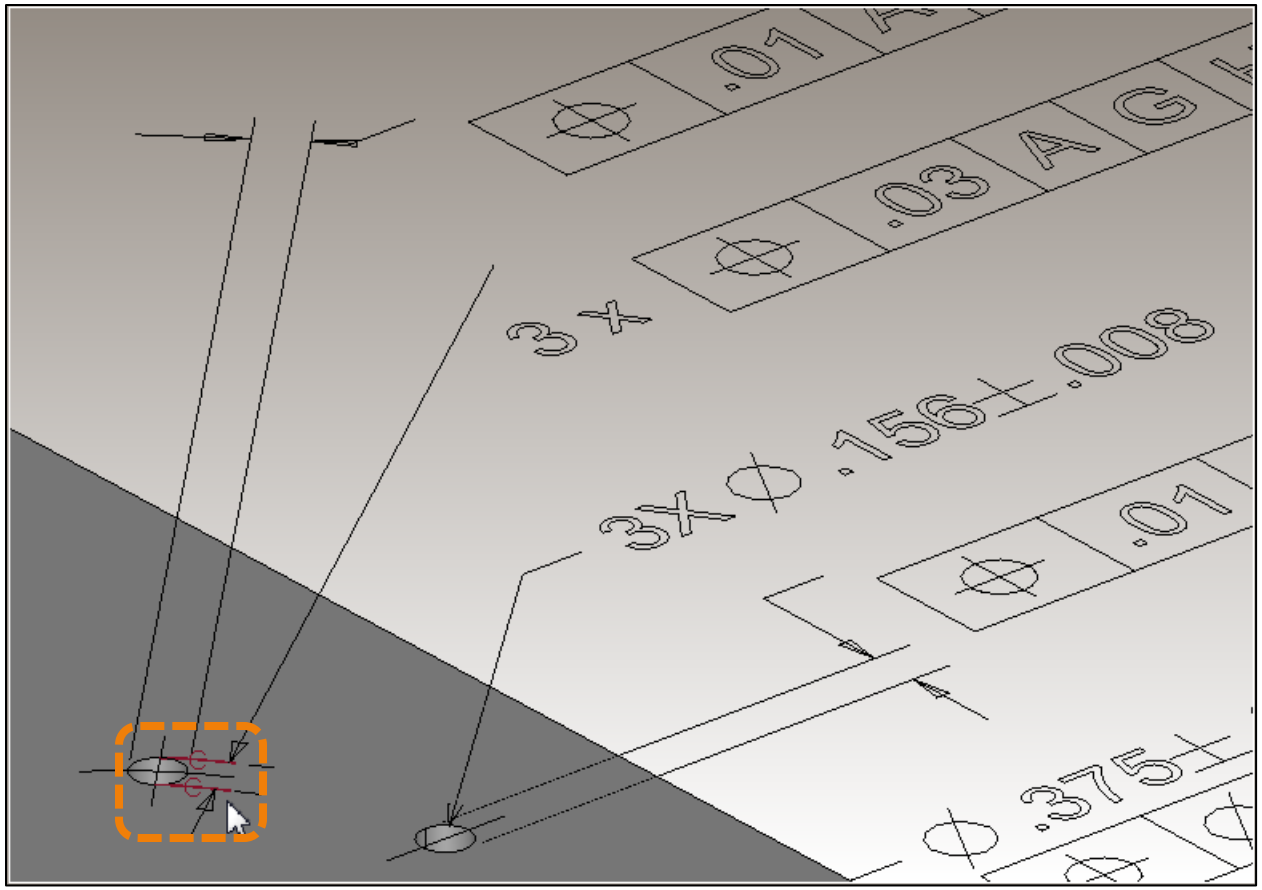

These extension lines have been created as non-solid curves in the model.

Return to Index

ITI TranscenData

CAD System Presentation Limitations for Annotation Text

Return to Index

Annotation Text: DFS text is extraneous

Presentation Limitation

Test Case

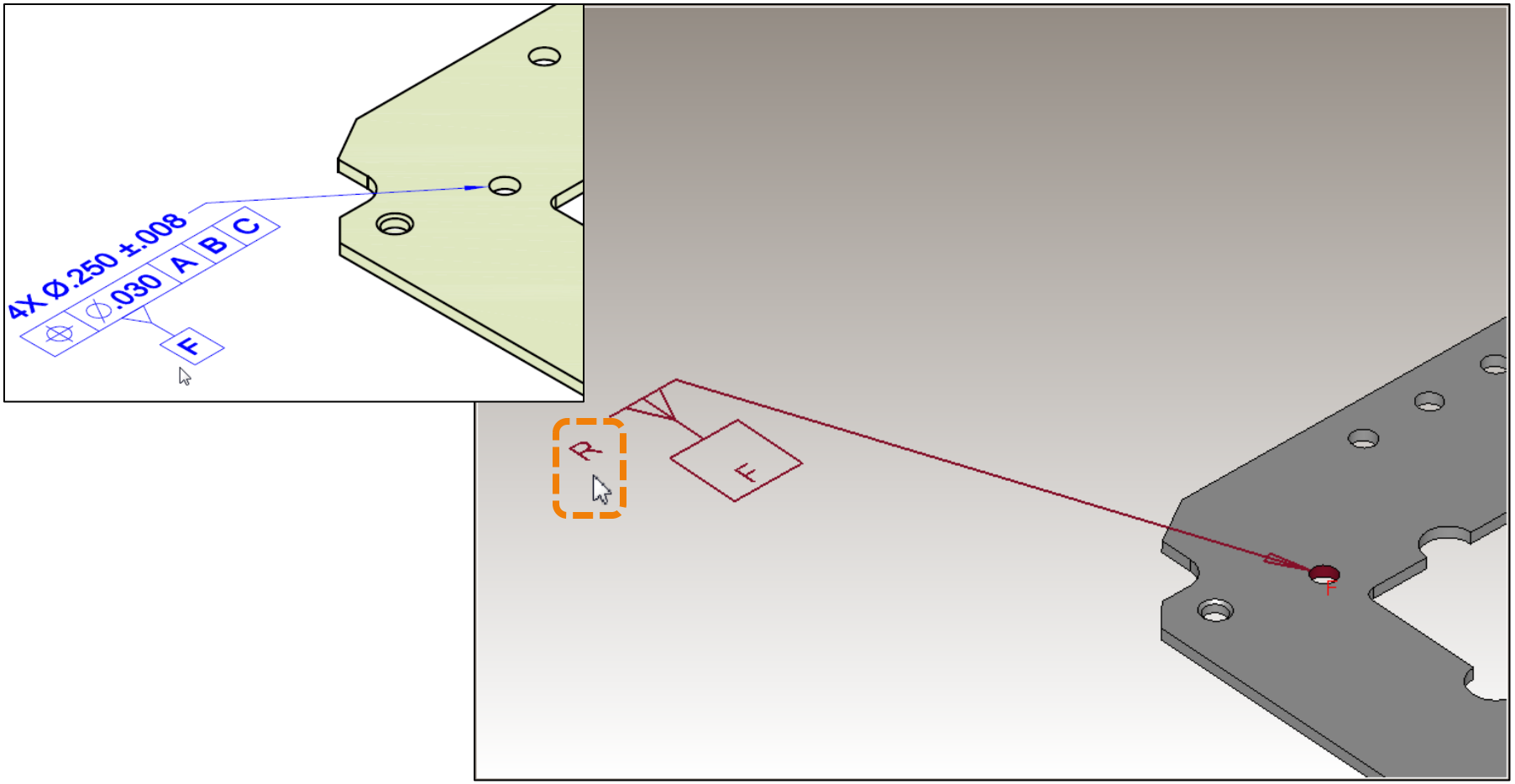

This datum feature symbol has an unspecified “R” symbol.

Return to Index

TranscenData

Annotation Text: DIM has extraneous space

Presentation Limitation

Test Case

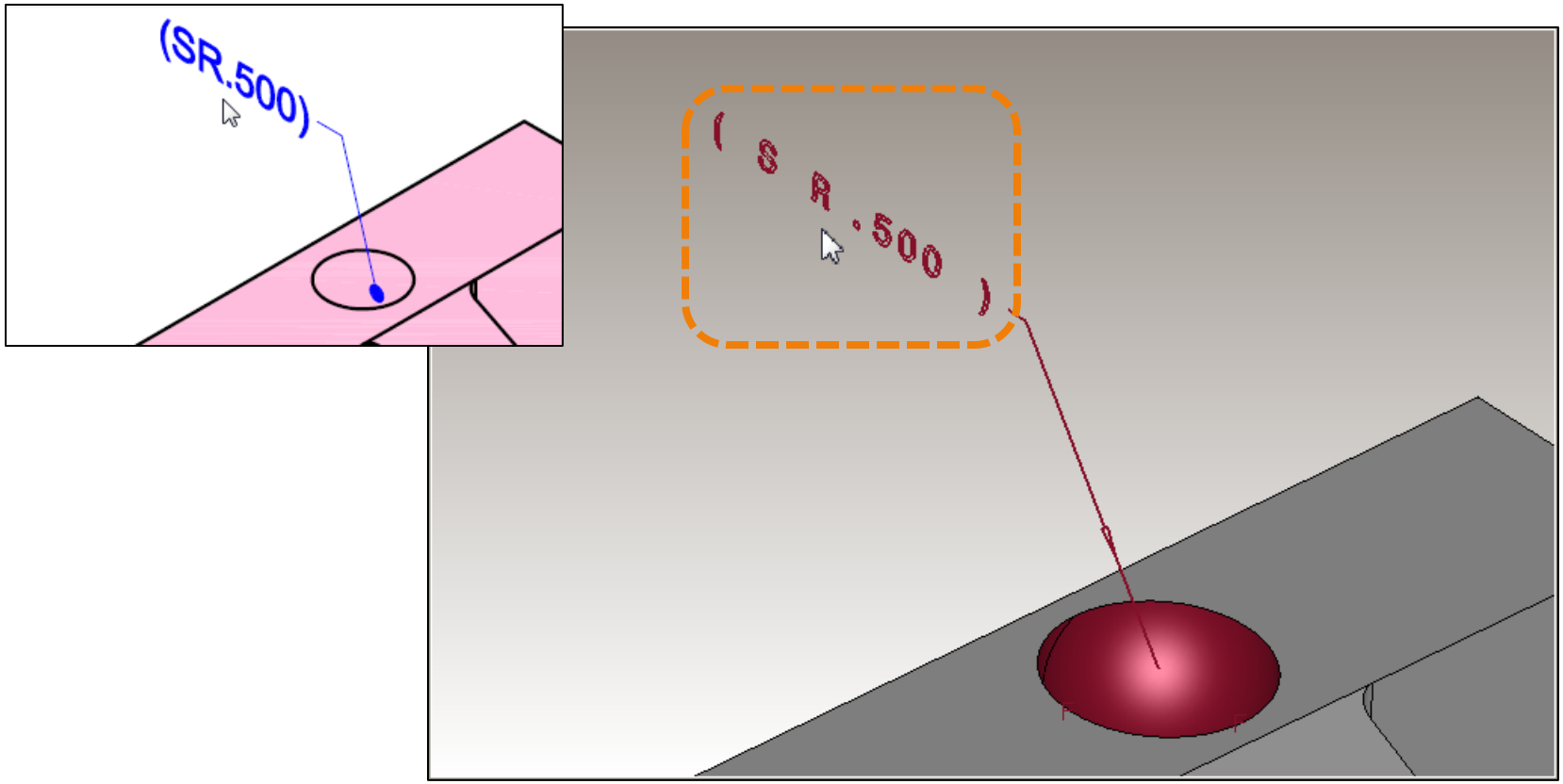

This dimension has extra spaces around the parentheses.

Return to Index

TranscenData

Annotation Text: DIM missing pattern text

Presentation Limitation

Complete

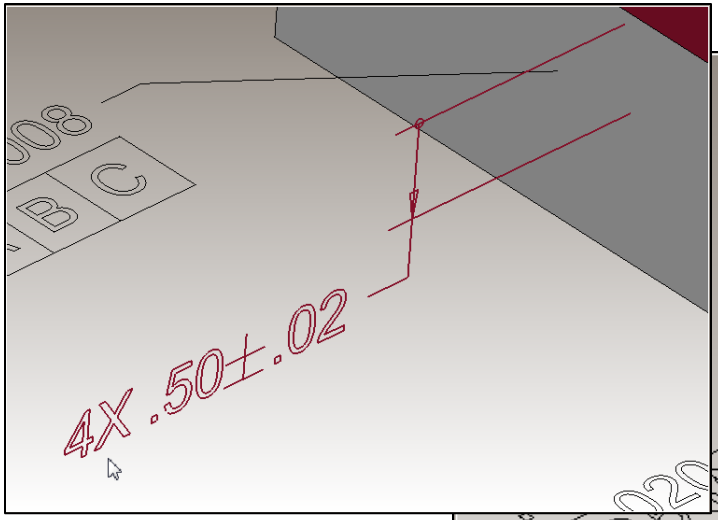

Incomplete

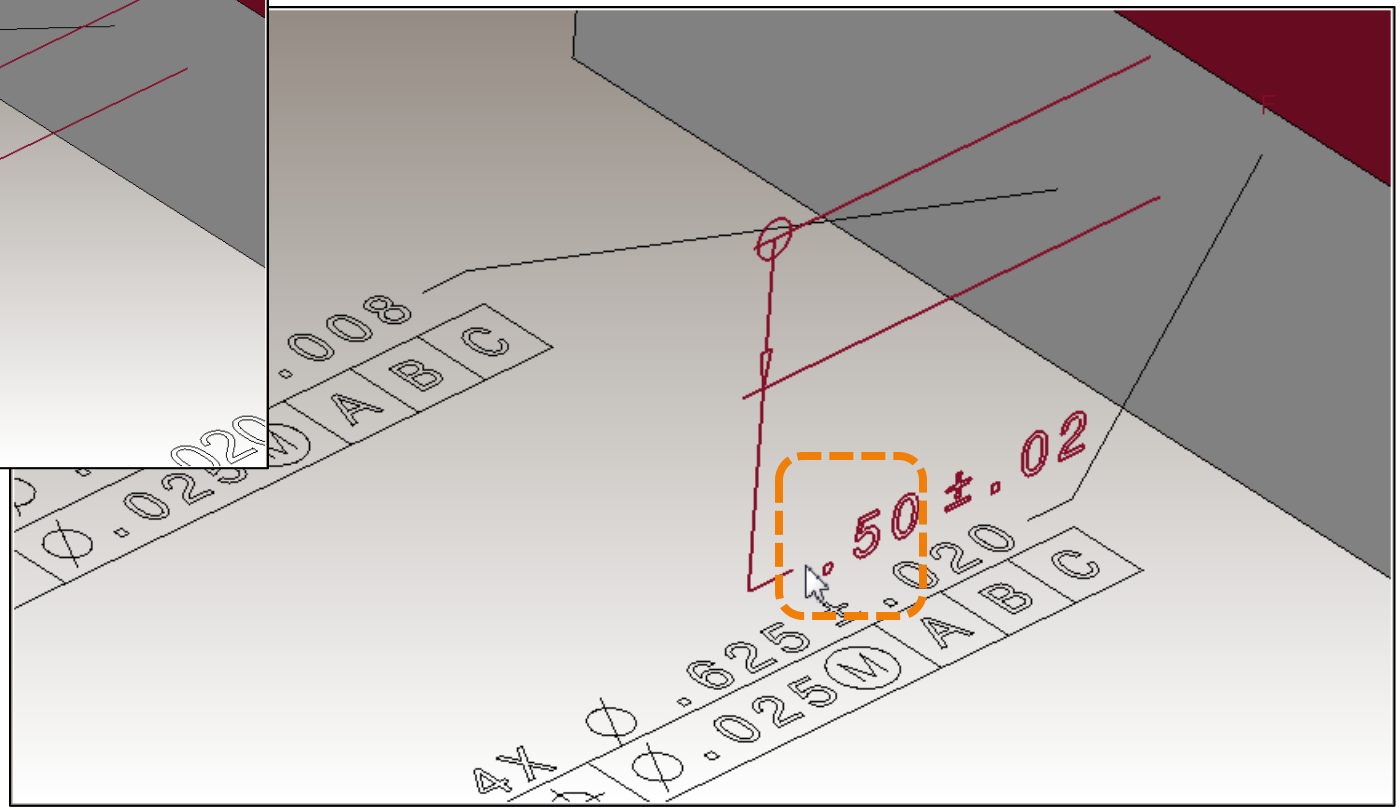

This annotation is missing the pattern instance count.

Return to Index

TranscenData

Annotation Text:
DIM missing zero tolerance limit negative sign

Presentation Limitation

Test Case

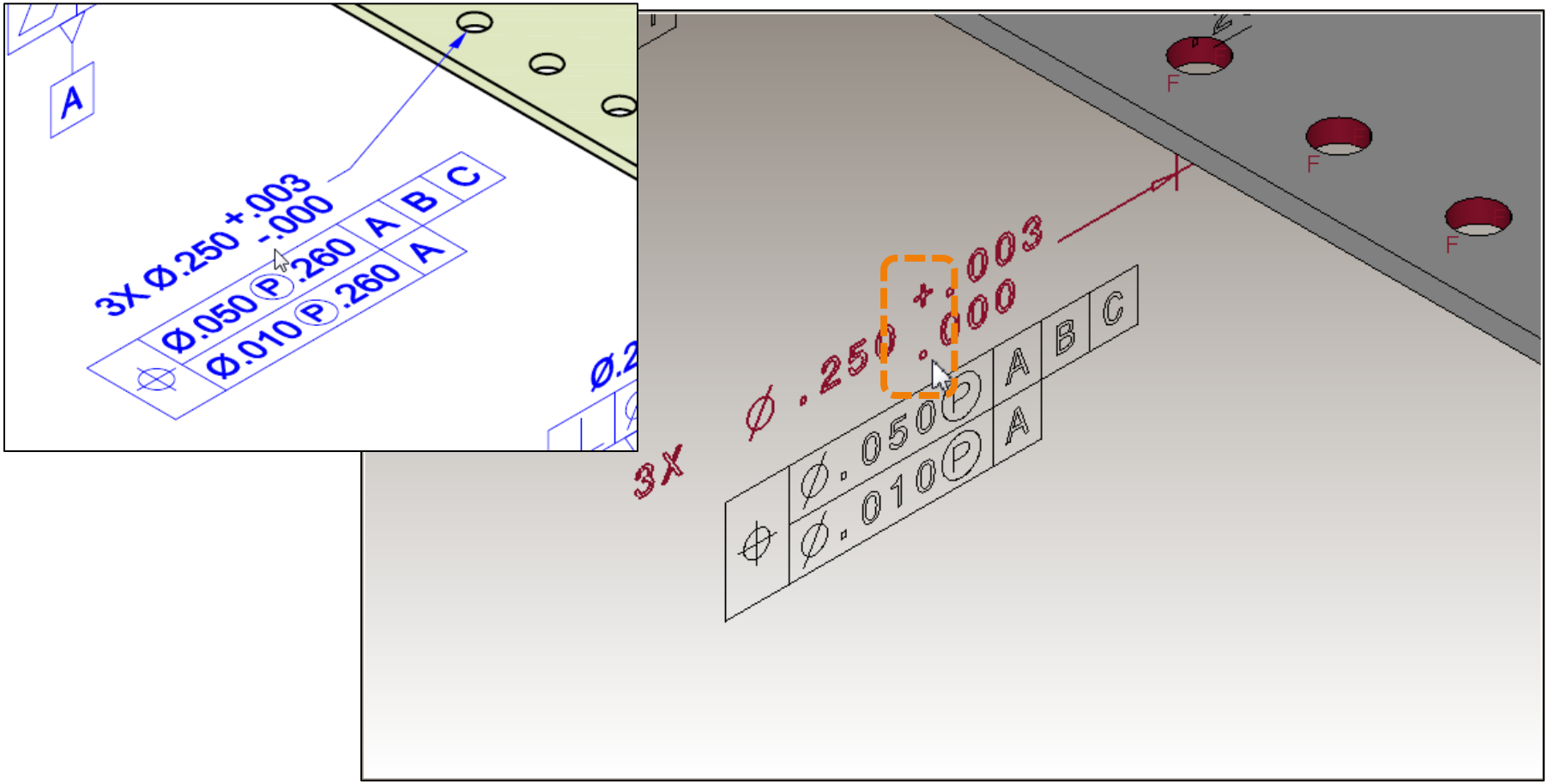

This tolerance is missing the specified negative sign.

Return to Index

TranscenData

Annotation Text: DIM nominal value rounded incorrectly

Presentation Limitation

Test Case

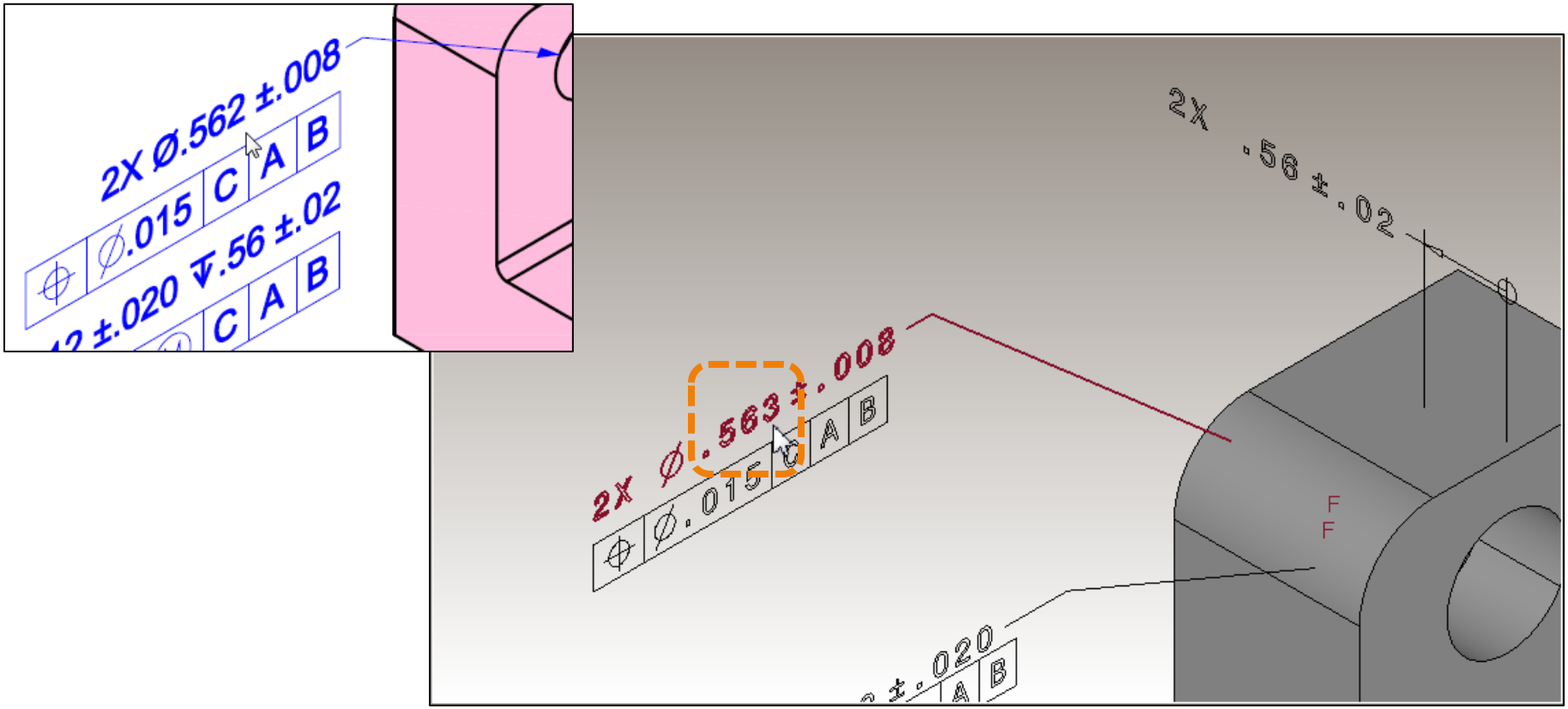

The nominal value of this dimension is rounded incorrectly.

Return to Index

TranscenData

Annotation Text: DIM pattern text is extraneous

Presentation Limitation

Test Case

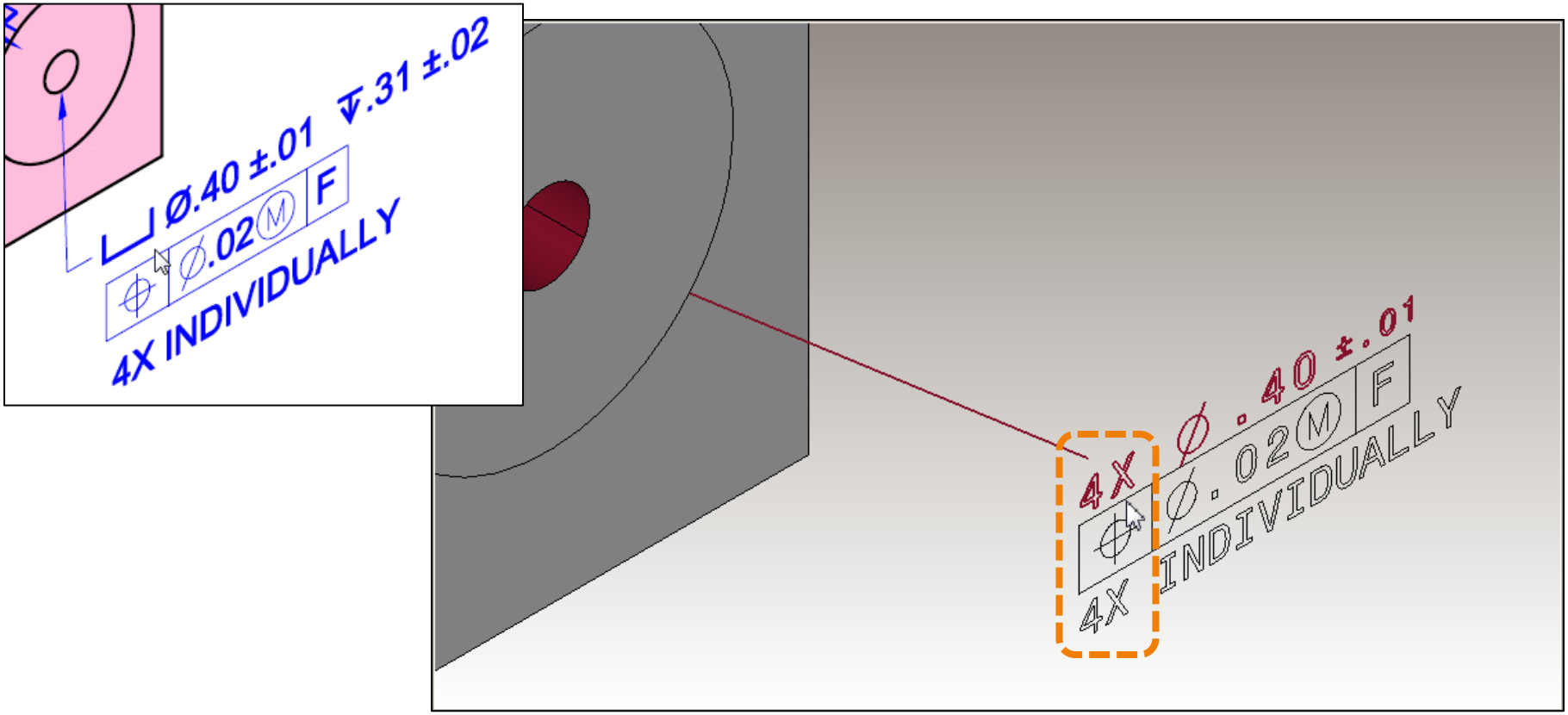

This dimension has extra pattern text.

Return to Index

TranscenData

Annotation Text: DIM pattern text is incorrect

Presentation Limitation

Test Case

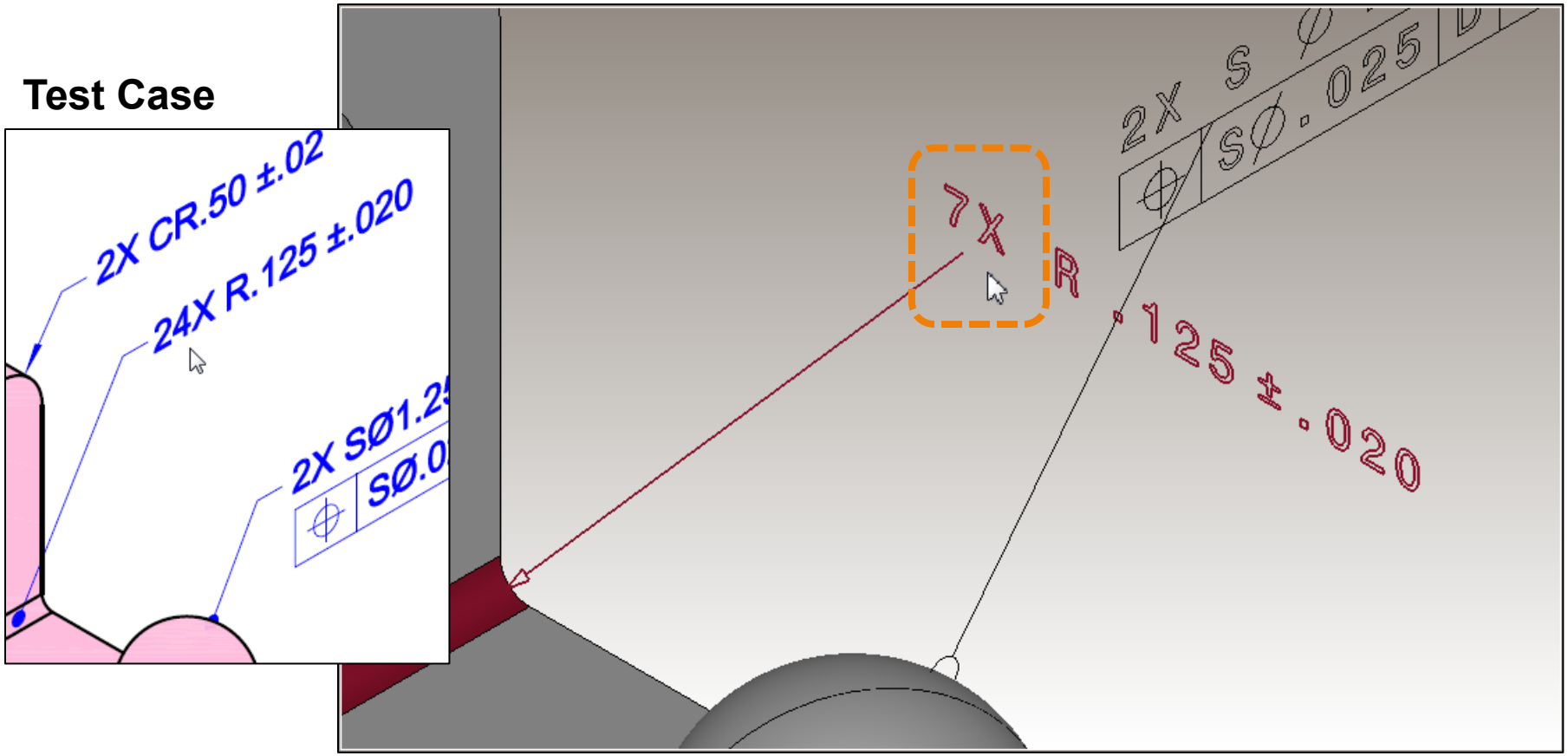

This dimension does not show the specified instance count.

Return to Index

ITI TranscenData

Annotation Text: FCF extension line DIM text is extraneous

Presentation Limitation

Test Case

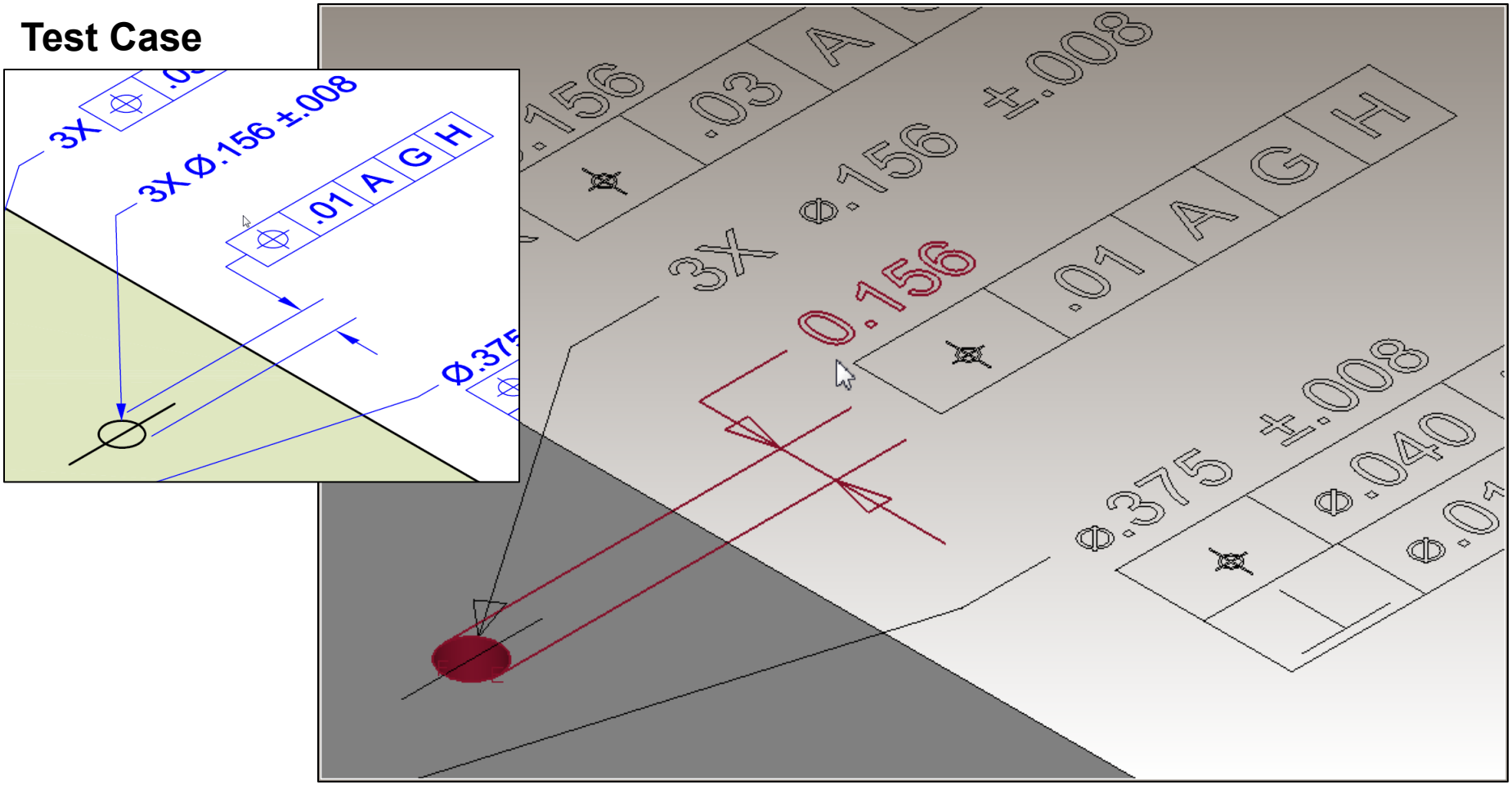

The extension lines for this feature control frame include an unspecified dimension.

Return to Index

TranscenData

Annotation Text: FCF missing projected tolerance zone length

Presentation Limitation

Test Case

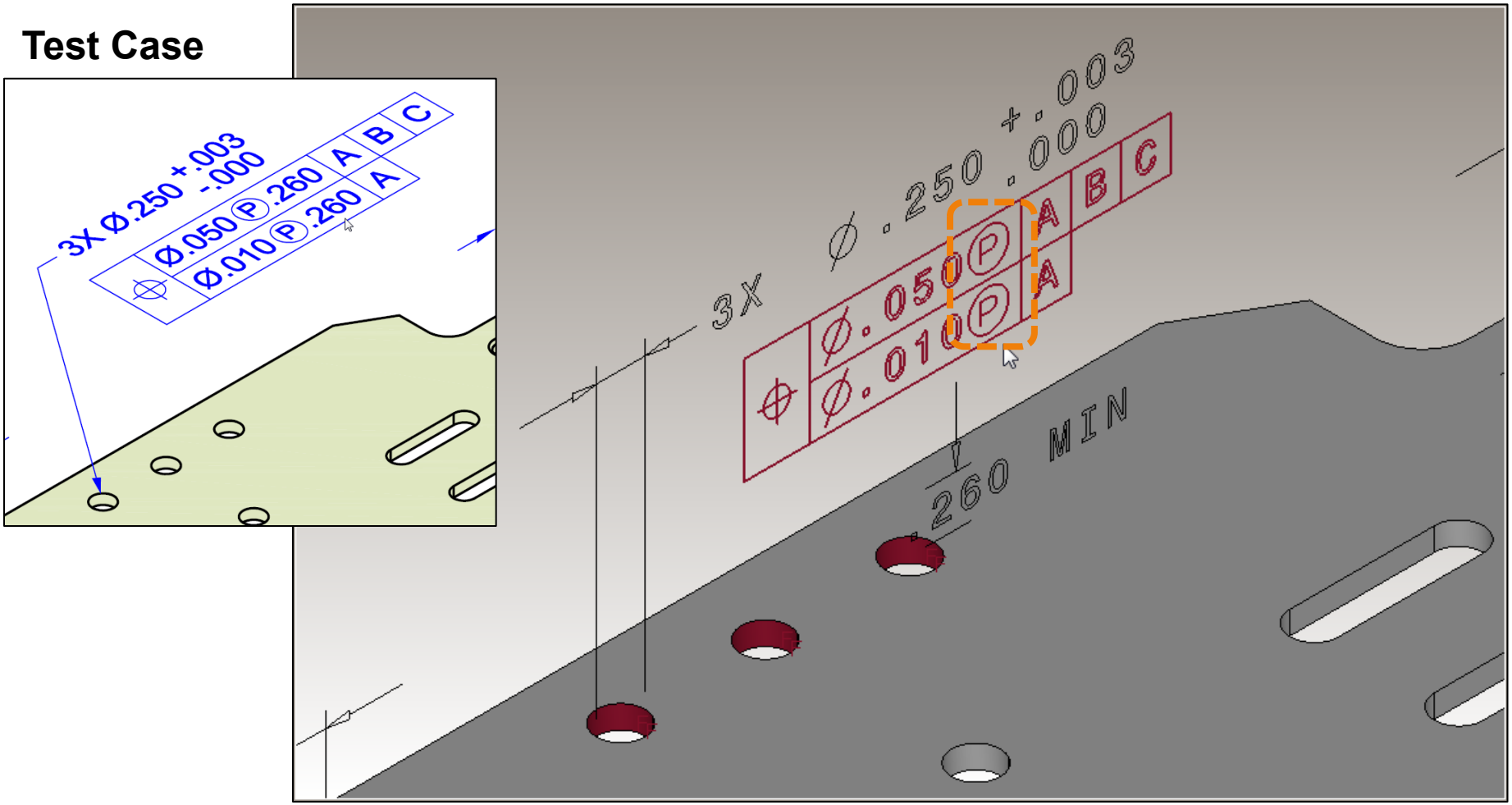

The length of the projected tolerance zone for this feature control frame is not displayed as specified.

Return to Index

ITI TranscenData

Annotation Text: FCF pattern text is extraneous

Presentation Limitation

Test Case

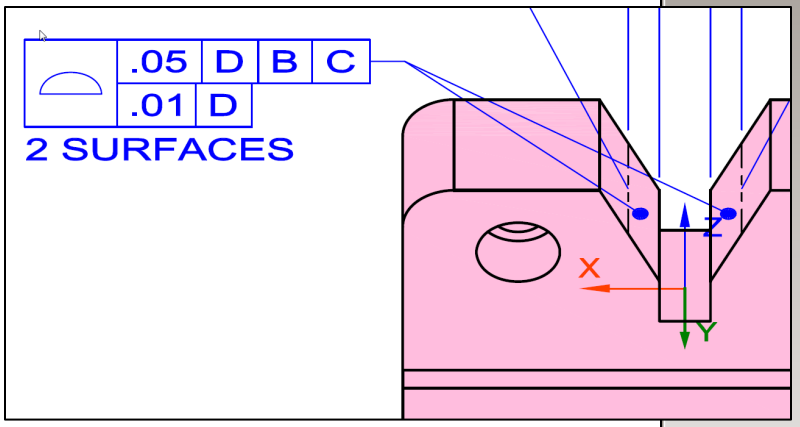

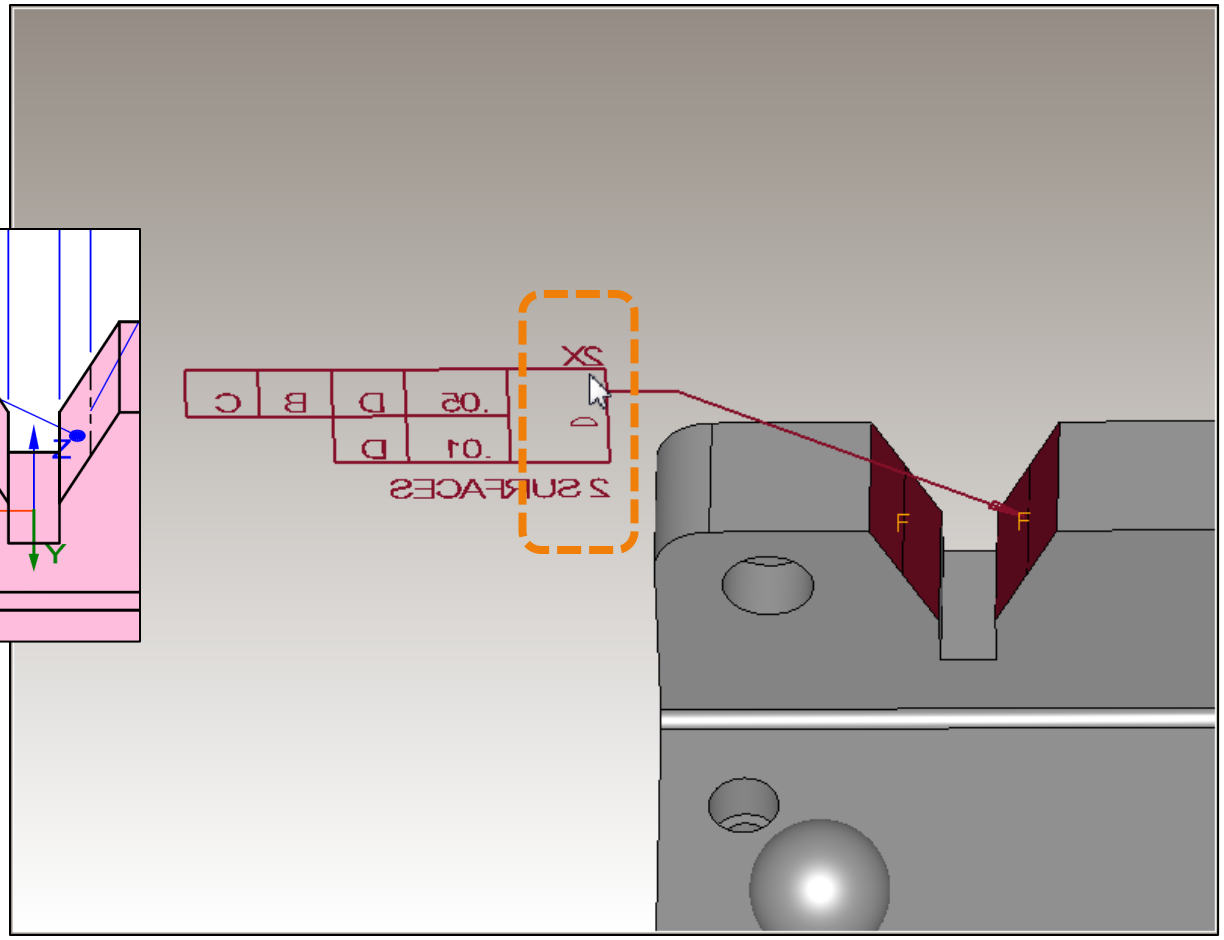

This feature control frame has extra pattern text.

Return to Index

TranscenData

Annotation Text: FCF pattern text is incorrect

Presentation Limitation

Test Case

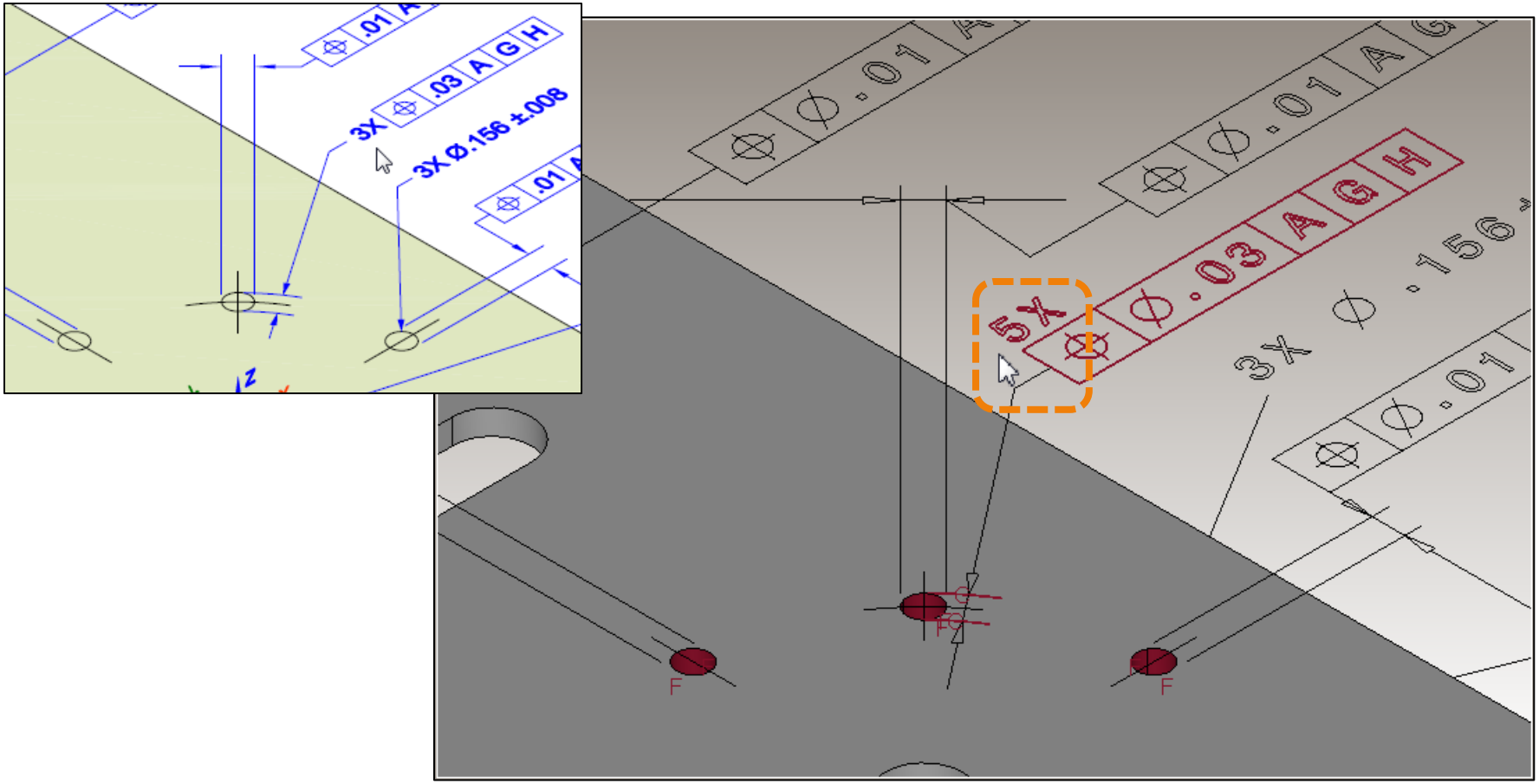

This feature control frame does not show the specified instance count.

Return to Index

ITI TranscenData

CAD System Presentation Limitations for Coordinate System Visibility

Return to Index

Coordinate System Visibility: CS visible in wrong view

Presentation Limitation

Test Case

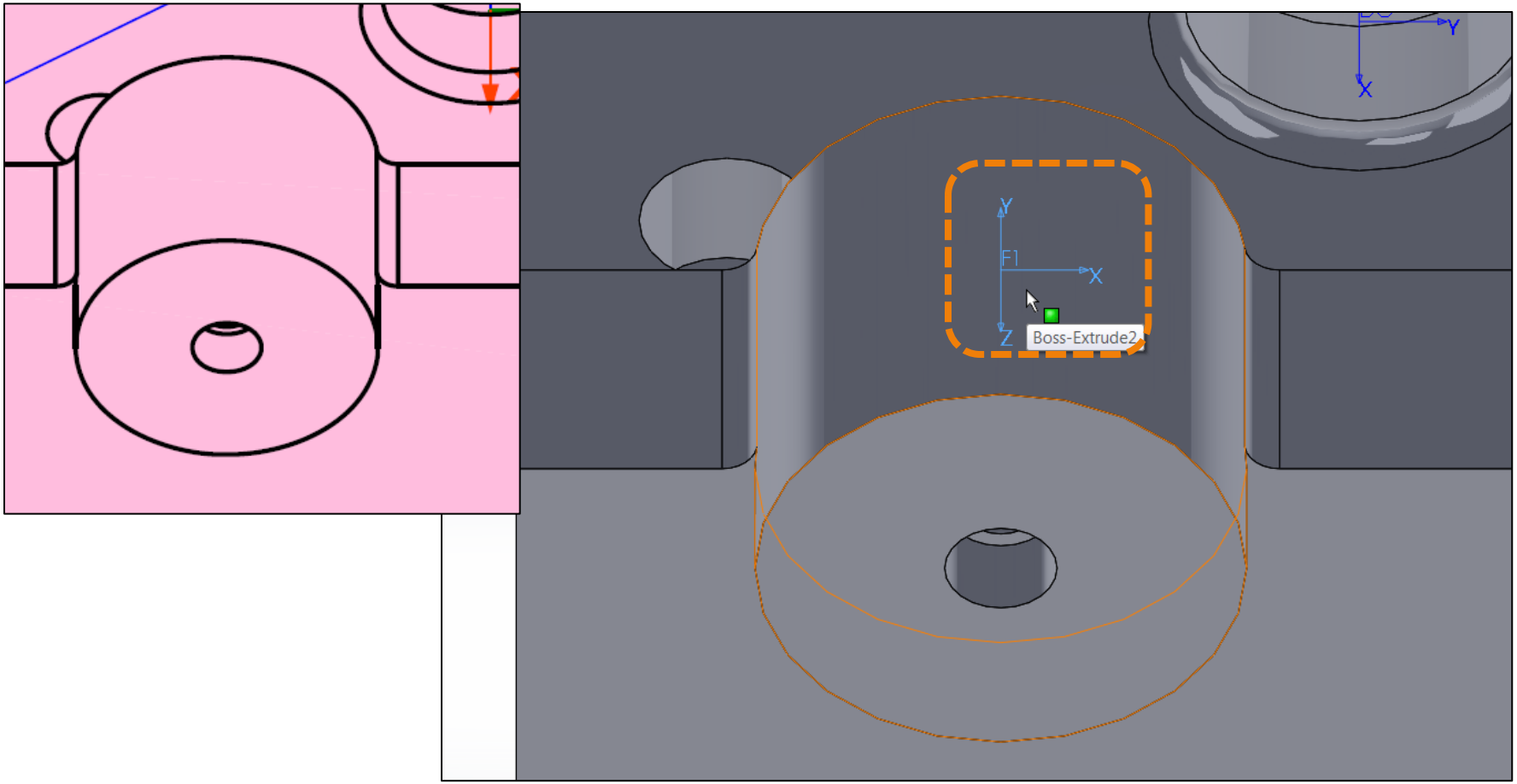

This coordinate system is shown in a view for which it is not specified.

Return to Index

TranscenData

CAD System Presentation Limitations for Supplemental Geometry Visibility

Return to Index

ITI TranscenData

Supplemental Geometry Visibility: SG curve visible in wrong view

Presentation Limitation

Test Case

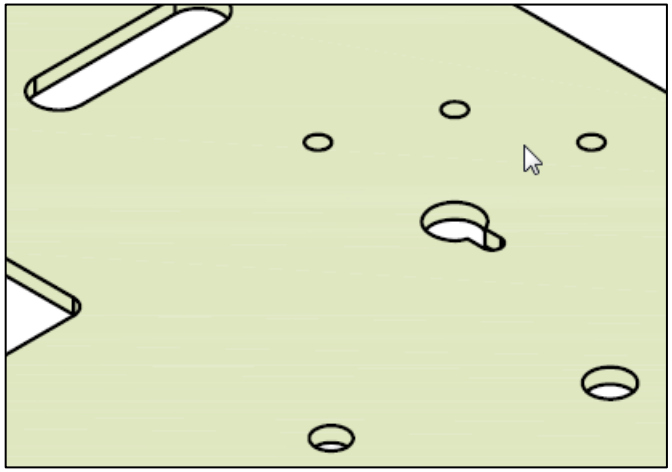

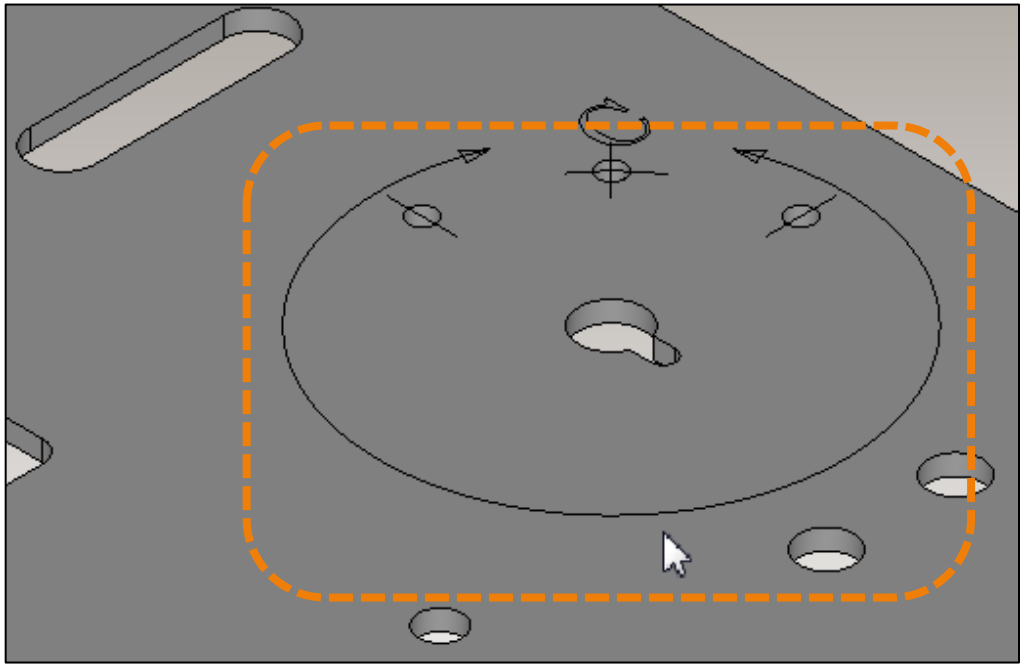

These supplemental curves are visible in a view for which they are not specified.

Return to Index

ITI TranscenData

Supplemental Geometry Visibility: SG point visible in wrong view

Presentation Limitation

Test Case

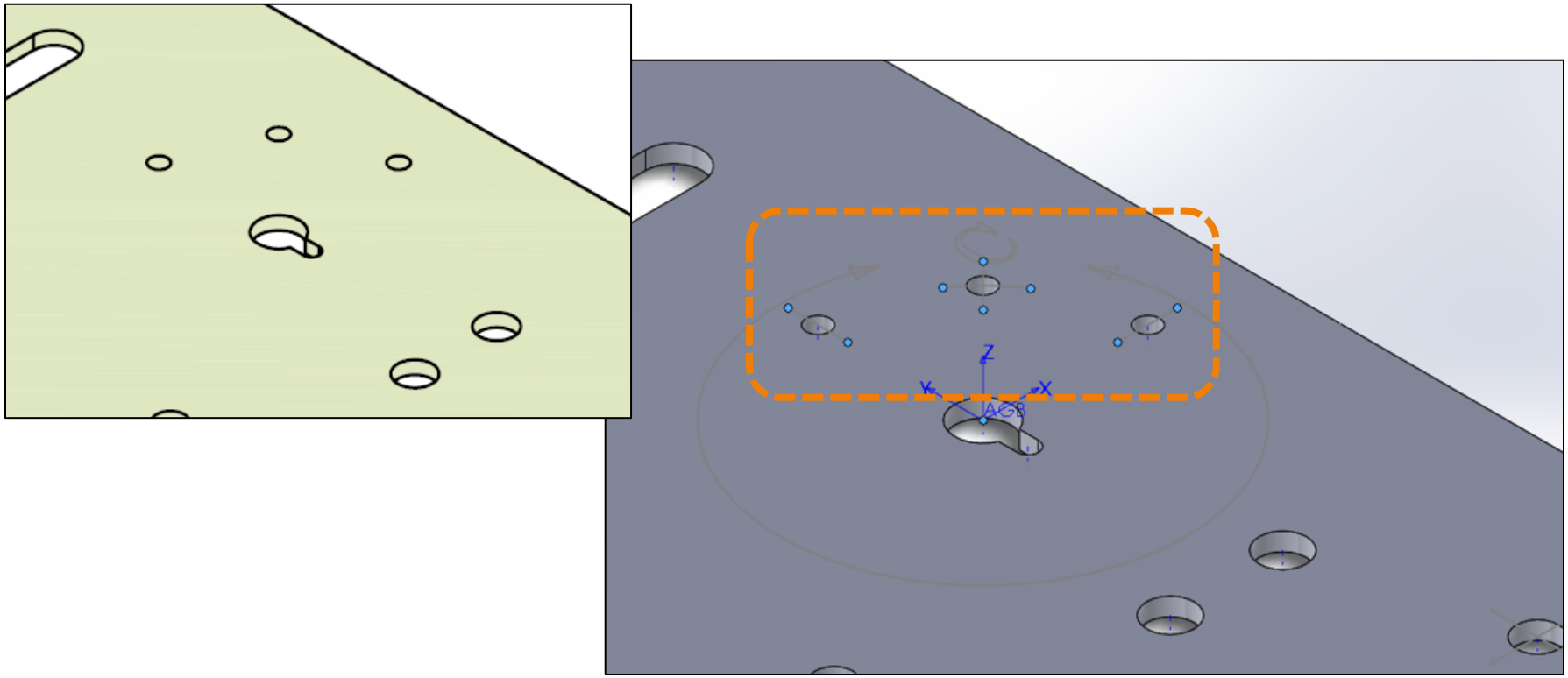

These supplemental points are visible in a view for which they are not specified.

Return to Index

ITI TranscenData

CAD System Presentation Limitations for Saved View Structure

Return to Index

ITI TranscenData

Saved View Structure:
View cannot contain annotations on different planes

Presentation Limitation

Test Case

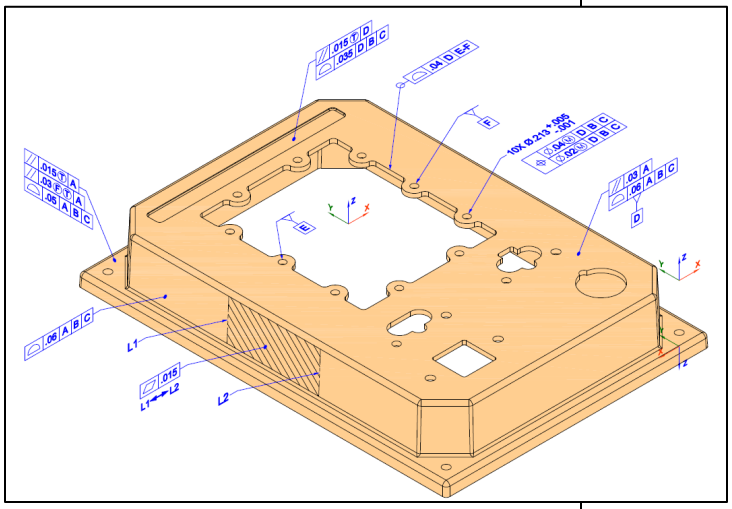

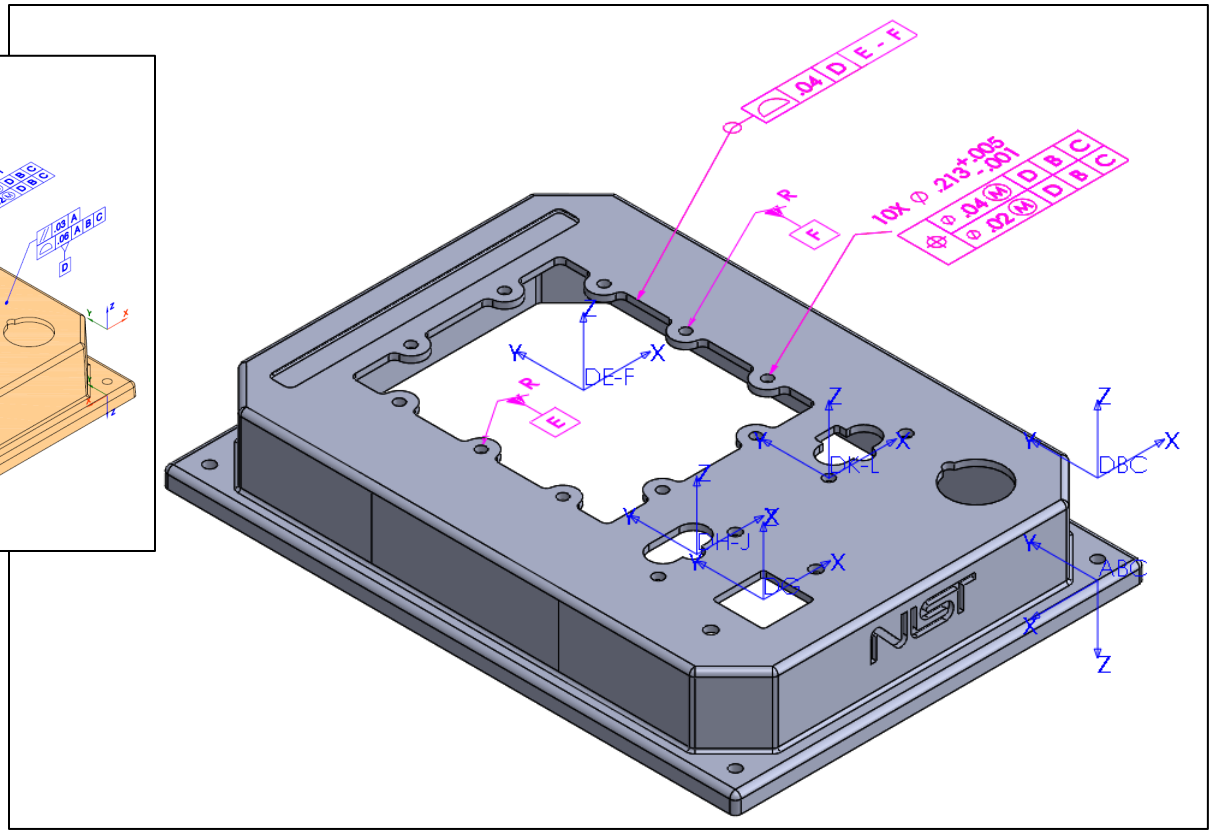

The PMI views in this system are limited to annotations with the same view and reading directions. The specified saved view has annotations with multiple view and reading directions.

Return to Index

TranscenData

CAD System Presentation Limitations for Saved View Frustum

Return to Index

ITI TranscenData

Saved View Frustum: View camera position not defined

Presentation Limitation

Test Case

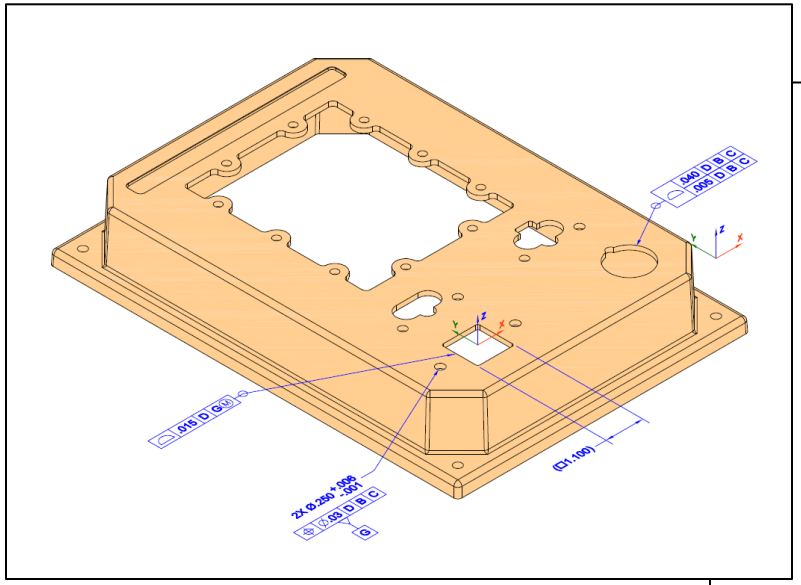

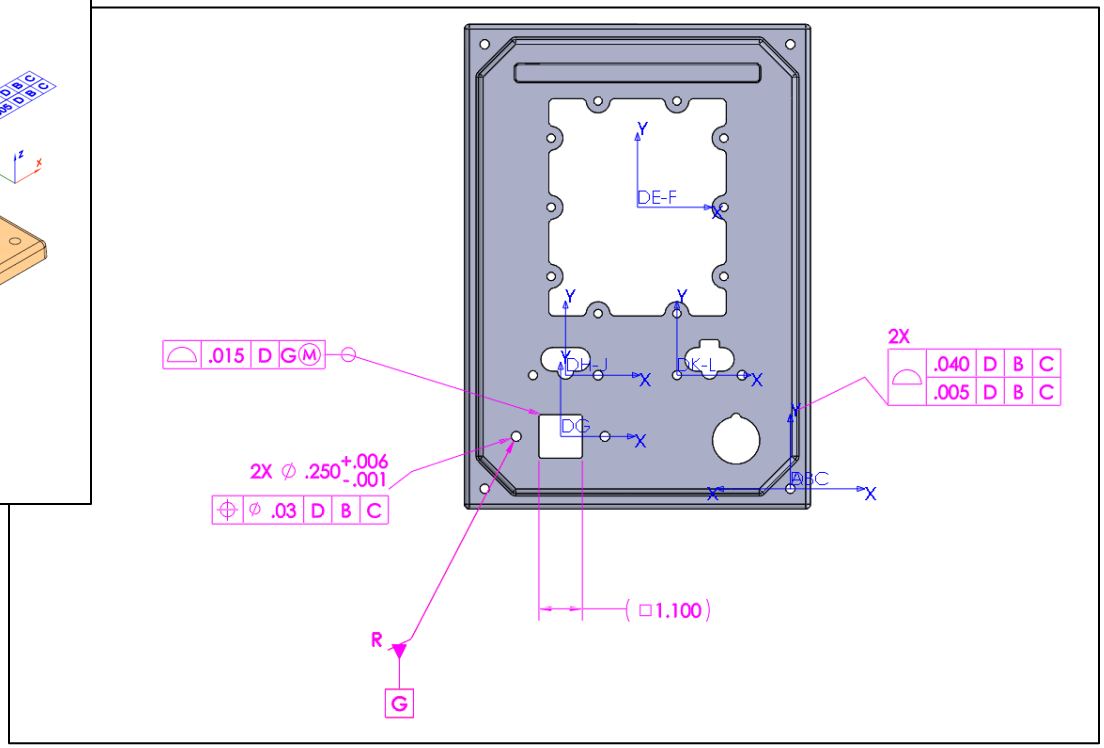

Each saved view in the test case has a specified camera position (view direction and zoom level). This system is unable to store a camera position in its PMI view definition.

Return to Index

TranscenData

PMI Constructs

Return
to Index

ITI TranscenData

PMI Constructs in FTC 6

Feature Description	Specification	Ano ID	Comments
Datum Feature A	Flatness .01	T1	
	Datum Feature Symbol A	DF1	
Datum Feature B	12.00 ±.01	D1	
	Perpendicularity .012|A	T2	
	Datum Feature Symbol B	DF2	
Datum Feature C	Perpendicularity .012|A|B	T3	
	Datum Feature Symbol C	DF3	
Datum Feature D	Profile Surface .02|A|B|C	T4	
	Flatness .01	T5	
	Datum Feature Symbol D	DF4	
Datum Feature E	Profile Surface .02|A|B|C	T6	
	Flatness .01	T7	
	Datum Feature Symbol E	DF5	
Datum Feature F	4X Ø.281 ±.008	D2	
	Position Ø.015|E|A|B	T8	
	Datum Feature Symbol F	DF6	
	4X INDIVIDUALLY	STR1	
Datum Target G1	Datum Target Symbol G1	DT1	
	Represented line element	RLE1	Circular line element for datum target G1 and controlled element
	(Ø1.000)	D3	Defines RLE1
Datum Target H1	Datum Target Symbol H1	DT2	
	Represented line element	RLE2	Circular line element for datum target H1 and controlled element
	(Ø1.000)	D4	Defines RLE2
Datum Target J1, J2	Datum Target Symbols J1-J2	DT3, DT4	
	Profile Surface .05|D|B|C Profile Surface .01|D	T9	Surfaces are grouped
	2 SURFACES	STR2	Groups surfaces for T9
	Represented line element	RLE3	
	Represented line element	RLE4	
	(1.106)	D5	Applies to datum target lines
Datum Target K1, K2	Datum Target Symbols K1-K2	DT5, DT6	
	Profile Surface .05|D|B|C Profile Surface .01|D	T10	Surfaces are grouped
	2 SURFACES	STR3	Groups surfaces for T10
	Represented line element	RLE5	
	Represented line element	RLE6	
	(1.106)	D6	Applies to datum target lines
Spherical Diameter Surfaces	2X SØ 1.250 ±.008	D7	
	Position SØ.025|D|B|C	T11	
Counterbored Holes - Set 1	4X Ø.415 ±.008	D8	
	⌴Ø.625 ±.020	D9-1	
	Position Ø.025Ⓜ|A|B|C	T12	Applies to F18-F28
	↧.50 ±.02	D9-2	
Counterbored Holes - Set 2	2X Ø.562 ±.008	D10	
	Position Ø.015|C|A|B	T13	
	2X ⌴ Ø.812 ±.020	D11-1	
	Position Ø.025Ⓜ|C|A|B	T14	
	↧.56 ±.02	D11-2	
Counterbored Holes - Set 3	⌴Ø.40 ±.01	D12-1	
	Position Ø.02Ⓜ|F	T15	Applies individually to 4 holes
	↧.31 ±.02	D12-2	
	4X INDIVIDUALLY	STR4	
Fillets	24X R.125 ±.020	D13	

Feature Description	Specification	Ano ID	Comments
Spherical Cutout	(SR.500)	D14	Reference Dimension
Large External Rounds	2X CR.50 ±.02	D15	
Tapered Center Rib Surface	1.00 : 2.00	D16	Basic Dimension
	Profile Surface .04|A|B|C	T16	
Conic Surfaces	2X 1.00 : 3.00	D17	Basic Dimension
Cone w/ G1	Profile Surface .05|D|B|C Profile Surface .01|D	T17	Applies to cone and cylinder
Cylindrical Cone Support	Profile Surface .05|D|B|C Profile Surface .01|D	T17	Applies to cone and cylinder
Cone w/ H1	Profile Surface .05|D|B|C Profile Surface .01|D	T18	Applies to cone and cylinder
Cylindrical Cone Support	Profile Surface .05|D|B|C Profile Surface .01|D	T18	Applies to cone and cylinder
Cylindrical hole in cone w/ G1	Ø.250 ±.008	D18	
	Position Ø.015|D|G	T19	
Bottom of Hole	↧.50 ±.05	D19	
Cylindrical hole in cone w/ H1	Ø.250 ±.008	D20	
	Position Ø.015|D|H	T20	
Bottom of Hole	↧.50 ±.05	D21	
Width feature of size @ J1-J2	.500 ±.008	D22	
	Position .025|D|C|J	T21	
Width feature of size @ K1-K2	.500 ±.008	D23	
	Position .025|D|C|K	T22	
General Profile Tolerance 1	Profile Surface .05|A|B|C	T23	
MCS for Views 1, 2, 3		CS1-1	Main MCS for model
MCS for DRF A		CS1-2	" " " "
MCS for DRF A|B		CS1-3	" " " "
MCS for DRF A|B|C		CS1-4	" " " "
MCS for DRF C|A|B		CS1-5	" " " "
MCS for DRF D|B|C		CS2	
MCS for DRF E|A|B		CS3	
MCS for DRF F1		CS4	First of 4 individual datum reference frames for F
MCS for DRF F2		CS5	Second of 4 individual datum reference frames for F
MCS for DRF F3		CS6	Third of 4 individual datum reference frames for F
MCS for DRF F4		CS7	Fourth of 4 individual datum reference frames for F
MCS for DRF D|G		CS8	
MCS for DRF D|H		CS9	
MCS for DRF D|C|J		CS10	
MCS for DRF D|C|K		CS11	
General Notes	NOTES...	STR5	Flat to screen

Return to Index

TranscenData

PMI Constructs in FTC 8

Feature Description	Specification	Ano ID	Comments
Datum Feature A	Flatness .03Ⓕ	T1	Applies in free state
	Flatness .015	T2	
	Datum Feature Symbol A	DF1	
Datum Feature B	Ø.238 +.005/-.001	D1	
	Perpendicularity Ø.015ⓂⒻ|A	T3	Applies in free state
	Datum Feature Symbol B	DF2	
Datum Feature C	Ø.238 +.005/-.001	D2	
	Position Ø.020ⓂⒻ|A|B	T4	Applies in free state
	Datum Feature Symbol C	DF3	
Datum Feature D	Parallelism .03|A	T5	
	Profile .06|A|B|C	T6	
	Datum Feature Symbol D	DF4	
Datum Feature E	Datum Feature Symbol E	DF5	Controlled by D3 and T7
Datum Feature F	Datum Feature Symbol F	DF6	Controlled by D3 and T7
Pattern of PCB Mtg Holes	10X Ø.213 +.005/-.001	D3	Controls DF E and DF F
	Position Ø.04Ⓜ|D|B|C Position Ø.02Ⓜ|D|B|C	T7	Controls DF E and DF F
Datum Feature G	2X Ø.250 +.006/-.001	D4	
	Position Ø.03|D|B|C	T8	
	Datum Feature Symbol G	DF7	
Datum Feature H	Ø.228 +.005/-.001	D5	
	Position Ø.050Ⓜ|D|B|C Position Ø.020Ⓜ|D|B|C SIM REQT 1	T9	
	Datum Feature Symbol H	DF8	
Datum Feature J	Ø.242 +.005/-.001	D6	
	Position Ø.050Ⓜ|D|B|C Position Ø.020Ⓜ|D|B|C SIM REQT 1	T10	
	Datum Feature Symbol J	DF9	
Datum Feature K	Ø.228 +.005/-.001	D7	
	Position Ø.050Ⓜ|D|B|C Position Ø.020Ⓜ|D|B|C SIM REQT 2	T11	
	Datum Feature Symbol K	DF10	
Datum Feature L	Ø.242 +.005/-.001	D8	
	Position Ø.050Ⓜ|D|B|C Position Ø.020Ⓜ|D|B|C SIM REQT 2	T12	
	Datum Feature Symbol L	DF11	
Pattern of 2 Other Main Mtg Holes	2X Ø.238 +.005/-.001	D9	
	Position Ø.023ⓂⒻ|A|B|C	T13	Applies in free state
Bottom Inside Surface	Parallelism .02|D	T14	
	Profile .06|A|B|C	T15	
Surface Opposite Datum Feature A	Parallelism .015Ⓣ|A	T16	
	Parallelism .03ⒻⓉ|A	T17	Applies in free state
	Profile .05|A|B|C	T18	
External Sidewall in -X Direction	Profile .06|A|B|C	T19	
Limited Area on External Sidewall in -X Direction	Flatness .015 L1 ◄► L2	T20	Tolerance applies between line elements L1 and L2
	Represented line element	RLE1	L1
	Represented line element	RLE2	L2

Feature Description	Specification	Ano ID	Comments
	Leader-Directed Note L1	LDN1	Labels RLE 1 that bounds limited area
	Leader-Directed Note L2	LDN2	Labels RLE 2 that bounds limited area
Recess for Placard	Parallelism .015Ⓣ|D	T21	
	Profile .035|D|B|C	T22	
Cutout for PCB Mtg	Profile .04|D|E-F All Around	T23	
Square hole cutout	(□1.100)	D10	
	Profile .015|D|GⓂ All Around	T24	
Cutout for E Stop	Profile .040|D|B|C Profile .005|D|B|C All Around	T25	
Cutout for Middle Switch on -X Side	Profile .015|D|HⓂ-JⓂ All Around	T26	
Cutout for Middle Switch on +X Side	Profile .015|D|KⓂ|LⓂ All Around	T27	
General Profile Tolerance	Profile Surface .06|A|B|C	T28	
MCS for Views A, B		CS1-1	Main MCS for model
MCS for DRF A		CS1-2	Same location as MCS1
MCS for DRF A|B		CS1-3	Same location as MCS1
MCS for DRF A|B|C - Free State		CS1-4	Same location as MCS1
MCS for DRF A|B|C - Restrained		CS1-5	Same location as MCS1
MCS for Views C, D		CS2-1	
MCS for DRF D		CS2-2	Same location as MCS2
MCS for DRF D|B|C		CS2-3	Same location as MCS2
MCS for DRF D|E-F		CS3	
MCS for DRF D|GⓂ		CS4	
MCS for DRF D|HⓂ-JⓂ		CS5	
MCS for DRF D|KⓂ|LⓂ		CS6	
General Notes	NOTES...	STR1	Flat to screen

Return to Index

TranscenData

PMI Constructs in FTC 9

Feature Description	Specification	Ano ID	Comments
Datum Feature A	Flatness .01	T1	
	Datum Feature Symbol A	DF1	
Datum Feature B	Ø.234 ±.008	D1	
	Perpendicularity Ø.016|A	T2	
	Datum Feature Symbol B	DF2	
Datum Feature C	Ø.234 ±.008	D2	
	Position Ø.016|A|B	T3	
	Datum Feature Symbol C	DF3	
Datum Feature D	Ø.750 ±.008	D3	
	Perpendicularity Ø.010|A	T4	
	Position Ø.050|A|B|C	T5	
	Datum Feature Symbol D	DF4	
Datum Feature E	2X Ø.221 ±.008	D4	
	Position Ø.020|A|D|B	T6	
	Datum Feature Symbol E	DF5	
Datum Feature F	4X Ø.250 ±.008	D5	
	Position Ø.030|A|B|C	T7	
	Datum Feature Symbol F	DF6	
Datum Feature G	Ø.375 ±.008	D6	
	Position Ø.040|A|B|C	T8	
	Perpendicularity Ø.010|A	T9	
	Datum Feature Symbol G	DF7	
Datum Feature H	.140 ± .008	D7	SIELD
	Position Ø.010|A|G|B	T10	SIELD
	Datum Feature Symbol H	DF8	
Radial End - Datum Feature H	Profile .008|A|G|H	T11	
Chamfers (cones)	4X .03 ±.01 X .03 ±.01	D8	2 dims and tols in one spec
Hole Pattern 1 - Panel Mounting	2XØ.234 ±.008	D9	Other 2 panel mounting holes
	Position Ø.016Ⓜ|A|B|C	T12	
Hole Pattern 2 - Horizontal	3X Ø.250 +.003/-.000	D10	Holes sized for PEM CLSS-032-3 self-clinching nuts
	Position Ø.050 Ⓟ.260|A|B|C Position Ø.010 Ⓟ.260|A	T13	Composite Position 2 Segments with Projected tolerance zone
Hole Pattern 3 - Vertical	3X Ø.250 +.003/-.000	D11	Holes sized for PEM CLSS-032-3 self-clinching nuts
	Position Ø.050 Ⓟ.260|A|B|C Position Ø.010 Ⓟ.260|A	T14	Composite Position 2 Segments with Projected tolerance zone
Cutout - for FTC10 Insert	Profile .02|A|FⓂ All Around	T15	Cutout for insert into FTC10
Small Slots	2X .25 ±.01	D12	Width
	Position .02Ⓜ|A|B|C	T16	
	BOUNDARY	STR1	
	2X 1.00 ±.02	D13	Length - SIELD
	Position .06Ⓜ|A|B|C	T17	SIELD
	BOUNDARY	STR2	SIELD
	4X R	D14	Ends
Large Slot	.375 ±.008 X 1.500 ±.012	D15	2 dims and tols in one spec
	Position .030Ⓜ|A|B|C All-Around	T18	
	BOUNDARY	STR3	
	2X R	D16	Ends
Hole Pattern 4 - Polar	3X Ø.156 ±.008	D17	

Feature Description	Specification	Ano ID	Comments
	3X Position .03|A|G|H	T19	Radial Direction - SIELD
	Represented line element	RLE1	Curve represents radial path
Polar Hole 1 - Horizontal	Position .01|A|G|H	T20	Applies in X direction - SIELD
	Represented line element	RLE2	Line represents X direction
Polar Hole 2 - Diagonal	Position .01|A|G|H	T21	Applies 45° to X direction - SIELD
	Represented line element	RLE3	Line represents 45° to X direction
Polar Hole 3 - Vertical	Position .01|A|G|H	T22	Applies in Y direction - SIELD
	Represented line element	RLE4	Line represents Y direction
Dual Unit Holes	2X Ø.315 ±.008 [8 ±0.2]	D18	Inch and [mm] per DRM 11th ed.
	Position Ø.030 [0.76]|A|B|C	T23	Inch and [mm] per DRM 11th ed.
Hole Pattern 5 - Bidirectional Tols	3X Ø.281 ±.008	D19	
	Perpendicularity Ø.010|A	T24	
	3X Position .060|A|B|C	T25	Applies in X direction - SIELD
	Represented line element	RLE5	Line represents X direction
	3X Position .020|A|B|C	T26	Applies in Y direction - SIELD
	Represented line element	RLE6	Line represents Y direction
Hole Pattern 6 - SIM REQT LH	2X Ø.156 ±.008	D20	
	Position Ø.025Ⓜ|A|DⓂ|EⓂ	T27	
	SEP REQT	STR4	
Hole Pattern 7 - SIM REQT RH	2X Ø.156 ±.008	D21	
	Position Ø.025Ⓜ|A|DⓂ|EⓂ	T28	
	SEP REQT	STR5	
Profile Tolerance 1	Profile Surface .05|A|B|C All Around	T29	Peripheral (sheared) surfaces
MCS for Views A, B, C, D		CS1-1	Main MCS for model
MCS for DRF A		CS1-2	Same location as MCS1
MCS for DRF A|B		CS1-3	Same location as MCS1
MCS for DRF A|B|C		CS1-4	Same location as MCS1
MCS for DRF A|D|B		CS2	
MCS for DRF A|DⓂ|EⓂ		CS3	Same location as DRF A|D|B
MCS for DRF A|FⓂ		CS4	
MCS for DRF A|G|B		CS5	
MCS for DRF A|G|H		CS6	Same location as DRF A|G|B
General Notes	NOTES...	STR6	Flat to screen
Identifier for Detail View C		VSI1	

Return to Index

TranscenData

Test Case Drawings and Models

Return
to Index

ITI TranscenData

Fully-toleranced Test Case 6
Saved View MBD_A Drawing

Feature and Specification Index
nist_ftc_06_asme1_rd_fsi.pdf

NOTES (UNLESS OTHERWISE SPECIFIED):

1. CAD MODEL _____ REV. __ IS REQUIRED TO COMPLETE PRODUCT DEFINITION.
2. DIRECTLY-TOLERANCED DIMENSIONS AND BASIC DIMENSIONS DEFINED ON THE DRAWING TAKE PRECEDENCE OVER DIMENSIONAL DATA DEFINED BY THE MODEL. OBTAIN ALL OTHER DIMENSIONAL DATA FROM THE MODEL. THE MODEL REPRESENTS BASIC DIMENSIONAL DATA UNLESS OTHERWISE SPECIFIED.
3. APPLICABLE STANDARDS:
   ASME Y14.41-2003 APPLIES TO DATASET.
   ASME Y14.5M-1994 APPLIES TO DIMENSIONING AND TOLERANCING.
4. .05 A B C APPLIES TO ALL UNTOLERANCED SURFACES.
5. UNITS: INCHES

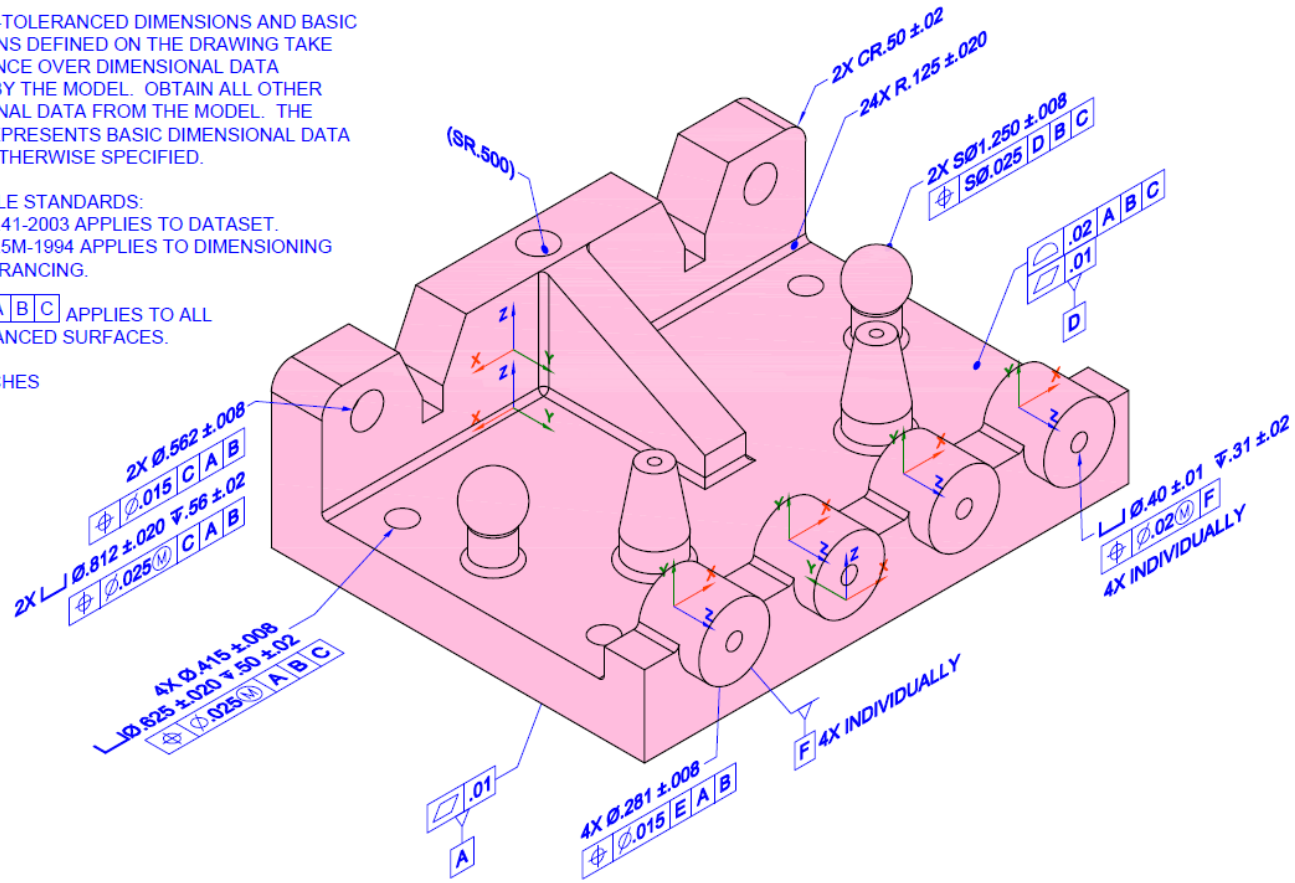

PMI Fully-Toleranced Test Case 6 - View A
Includes Atomic Test Cases - 52, 53, 72, 87, 88, 89

Rev D

Return to Index

TranscenData

Fully-toleranced Test Case 6
Saved View MBD_A Models

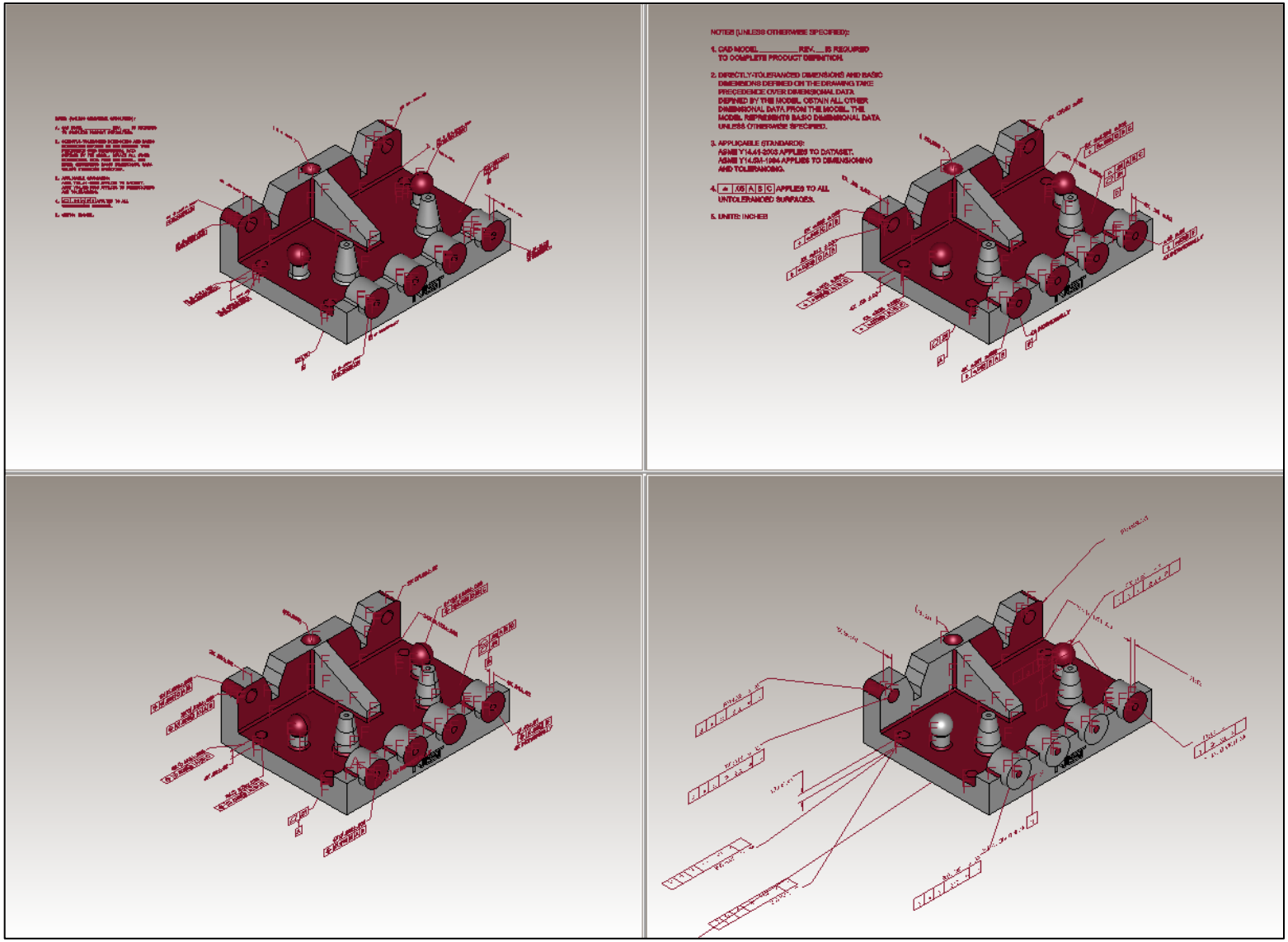

Return to Index

ITI TranscenData

Fully-toleranced Test Case 6
Saved View MBD_B Drawing

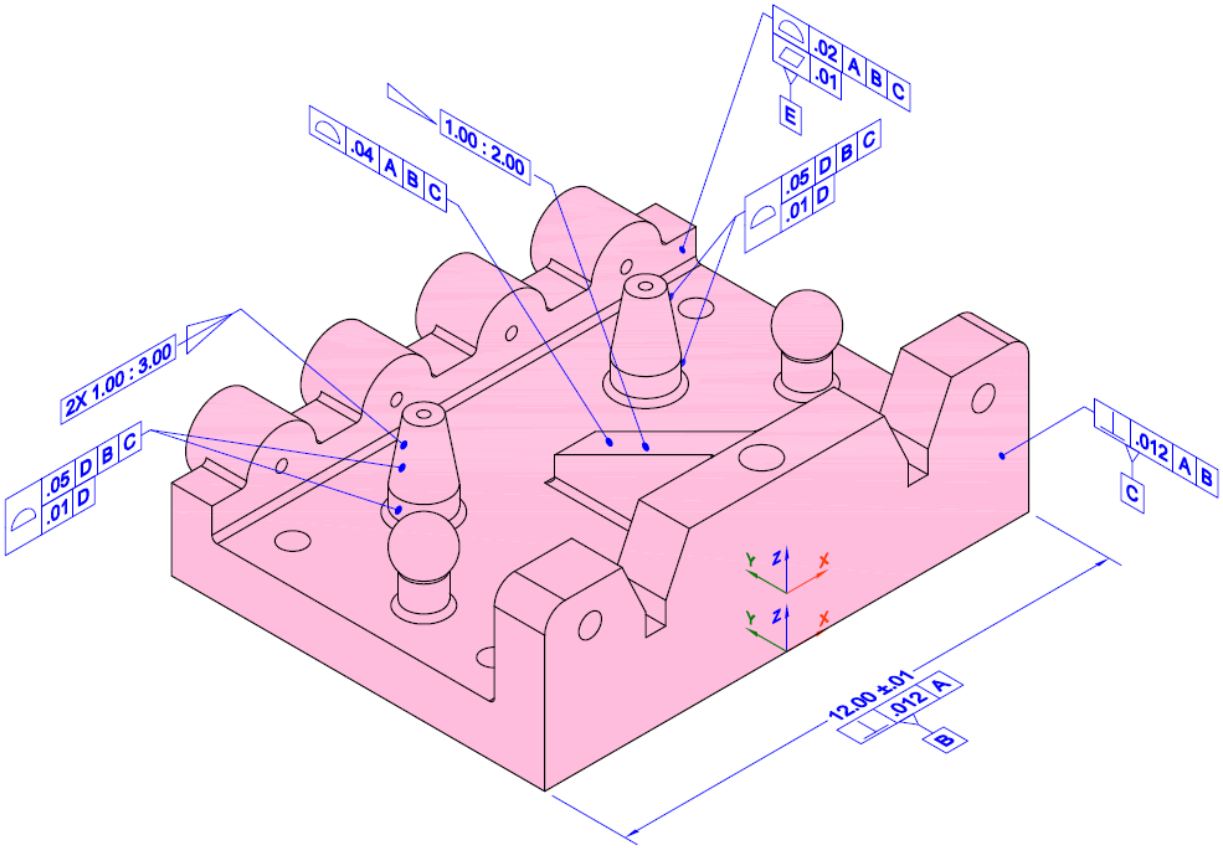

PMI Fully-Toleranced Test Case 6 - View B
Includes Atomic Test Cases - 57, 58

Rev D

Return to Index

ITI TranscenData

Fully-toleranced Test Case 6
Saved View MBD_B Models

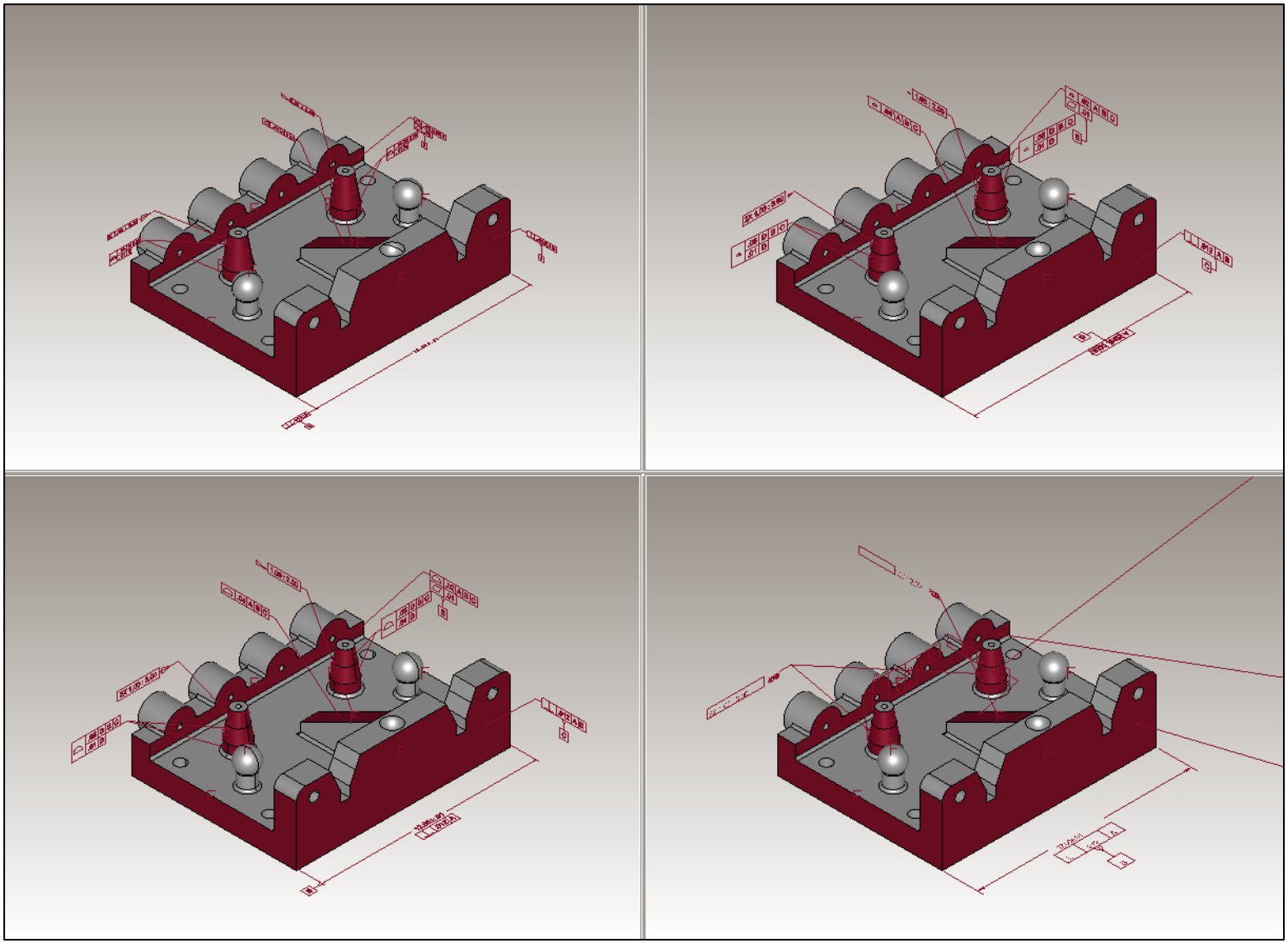

Return to Index

ITI TranscenData

Fully-toleranced Test Case 6
Saved View MBD_C Drawing

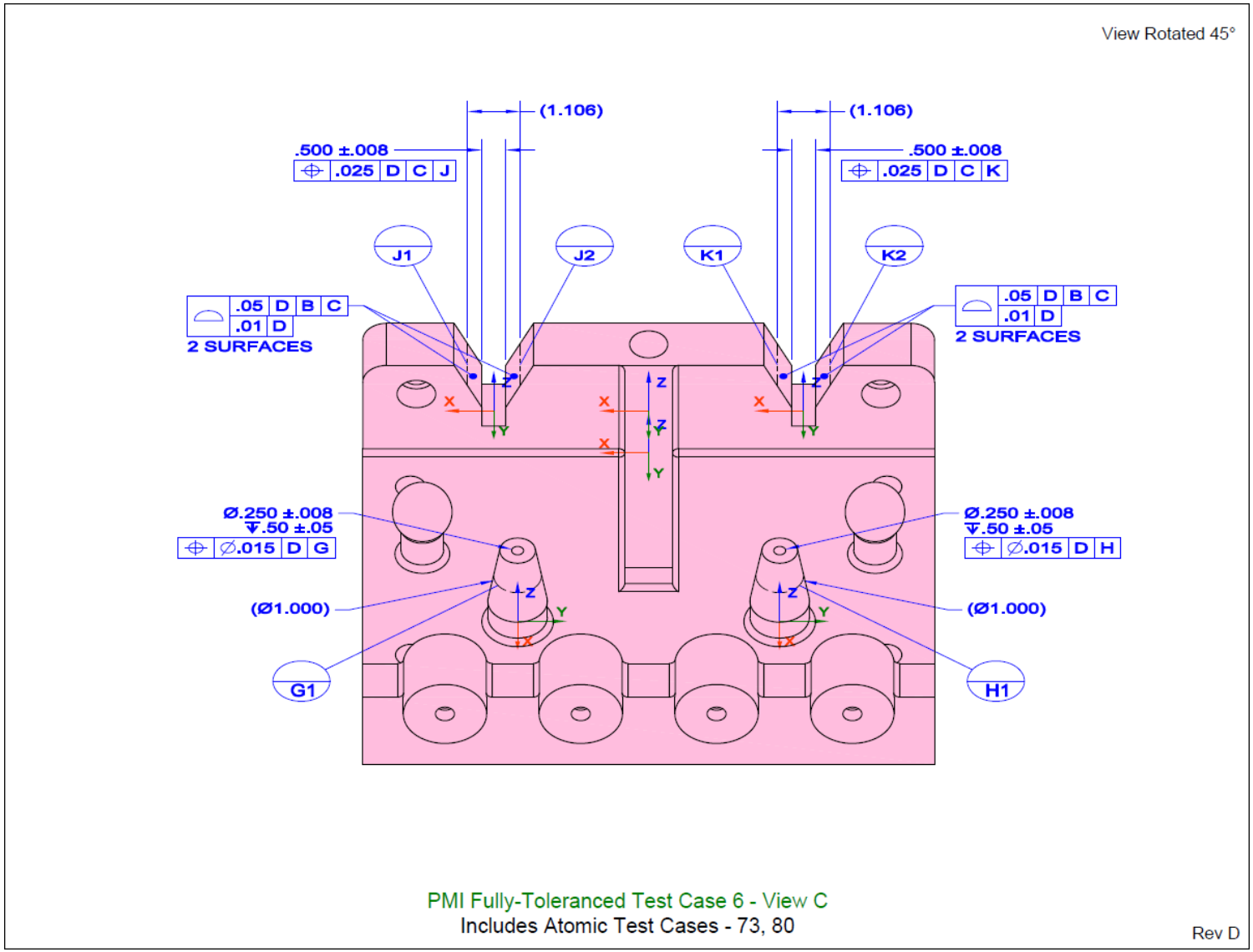

Return to Index

TranscenData

Fully-toleranced Test Case 6
Saved View MBD_C Models

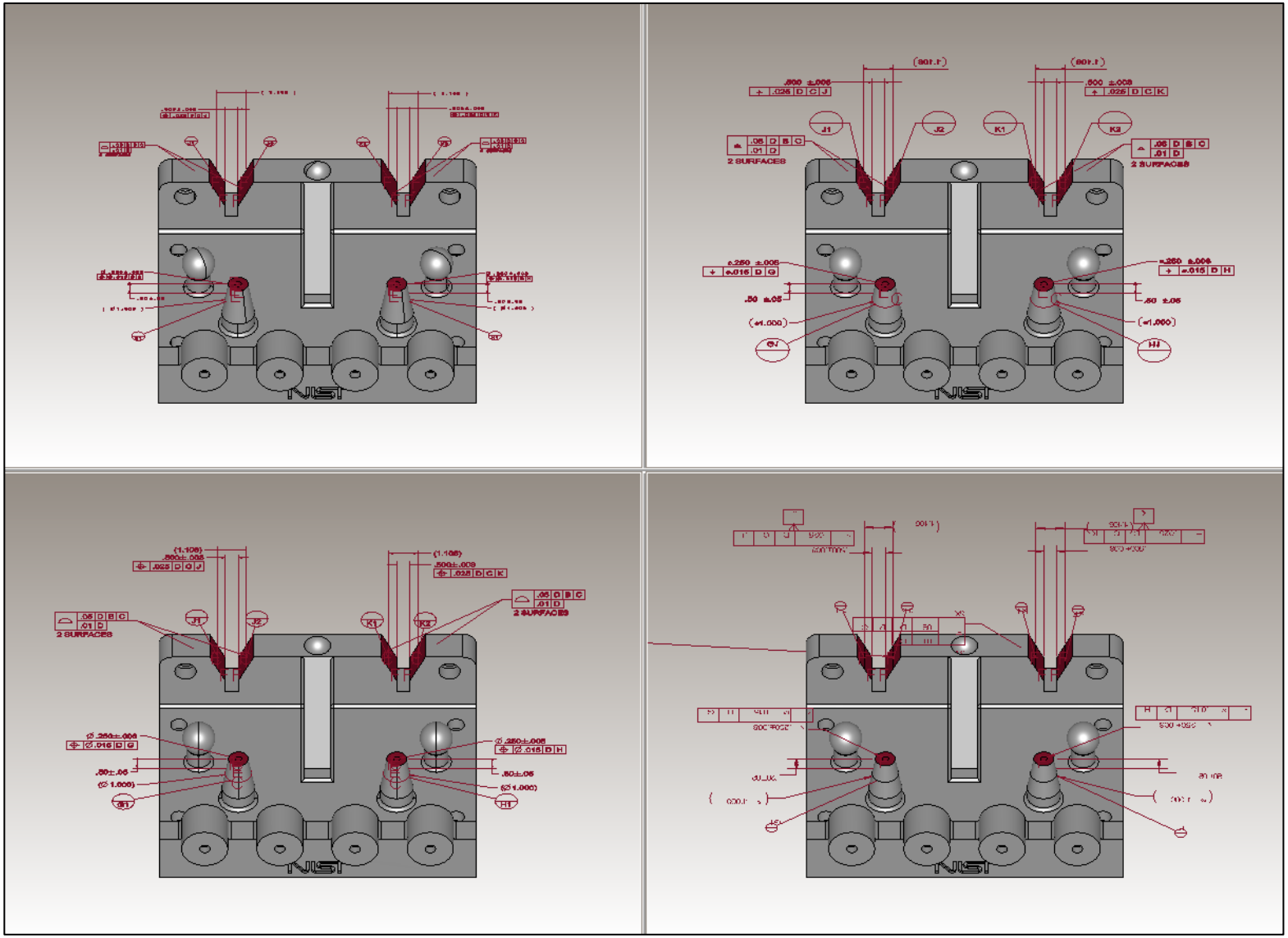

Return to Index

ITI TranscenData

Fully-toleranced Test Case 8
Saved View MBD_A Drawing

Feature and Specification Index
nist_ftc_08_asme1_rc_fsi.pdf

NOTES (UNLESS OTHERWISE SPECIFIED):

1. CAD MODEL _____ REV. __ IS REQUIRED TO COMPLETE PRODUCT DEFINITION.
2. DIRECTLY-TOLERANCED DIMENSIONS AND BASIC DIMENSIONS DEFINED ON THE DRAWING TAKE PRECEDENCE OVER DIMENSIONAL DATA DEFINED BY THE MODEL. OBTAIN ALL OTHER DIMENSIONAL DATA FROM THE MODEL. THE MODEL REPRESENTS BASIC DIMENSIONAL DATA UNLESS OTHERWISE SPECIFIED.
3. APPLICABLE STANDARDS:
   ASME Y14.41-2003 APPLIES TO DATASET.
   ASME Y14.5M-1994 APPLIES TO DIMENSIONING AND TOLERANCING.
4. [⌓ | .06 | A | B | C] APPLIES TO ALL UNTOLERANCED SURFACES.
5. DIMENSIONING AND TOLERANCING APPLY WITH PART RESTRAINED AS FOLLOWS, EXCEPT AS INDICATED.

   PLACE DATUM FEATURE A AGAINST DATUM FEATURE SIMULATOR A.

   ENGAGE DATUM FEATURES B AND C WITH DATUM FEATURE SIMULATORS B AND C RESPECTIVELY.

   APPLY LOAD TO PART TO RESTRAIN DATUM FEATURE A AGAINST ITS SIMULATOR.

   DETAILED INSPECTION PLAN NEEDED TO COMPLETELY DEFINE RESTRAINT.
6. UNITS: INCHES

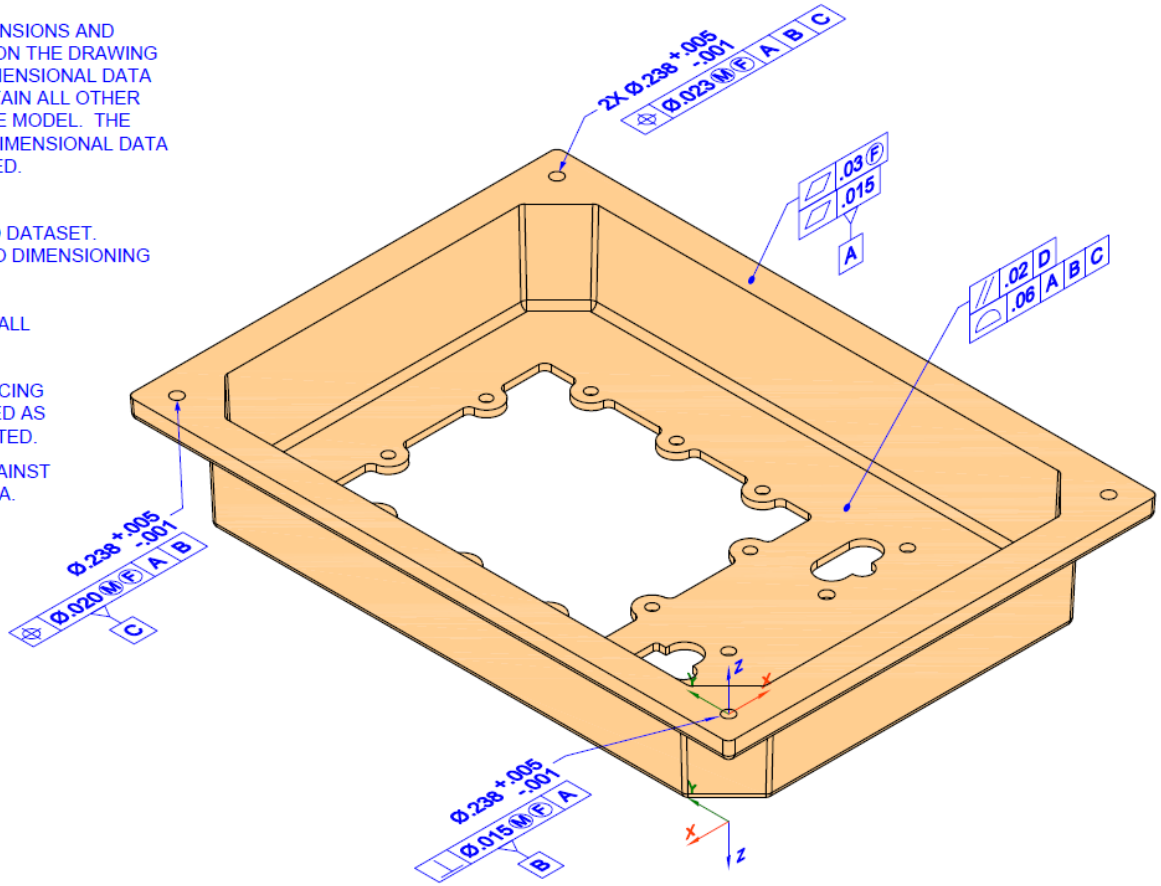

PMI Fully-Toleranced Test Case 8 - View A
Includes Atomic Test Cases - 66, 90

Rev C

Return to Index

ITI TranscenData

Fully-toleranced Test Case 8
Saved View MBD_A Models

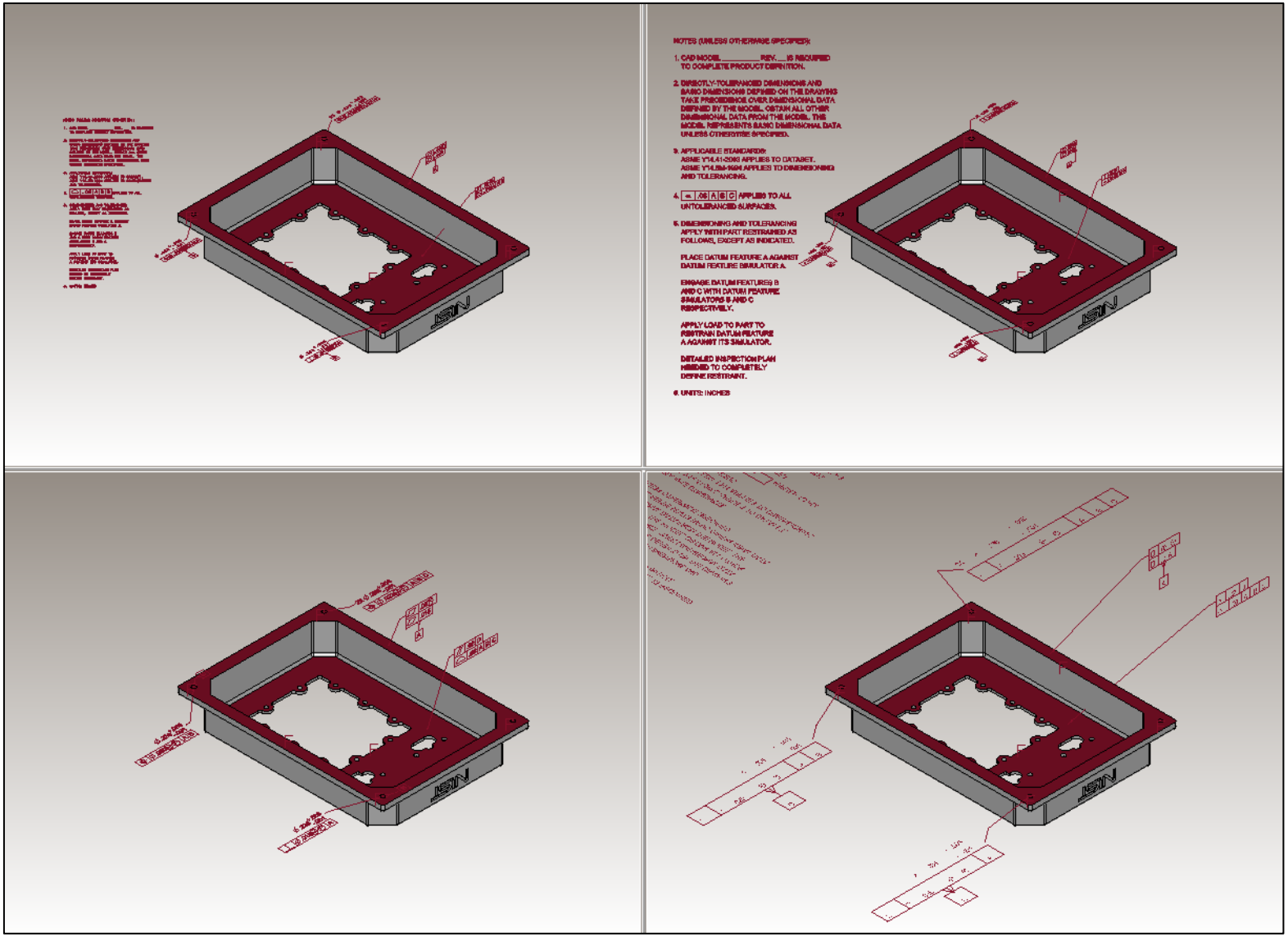

Return to Index

TranscenData

Fully-toleranced Test Case 8
Saved View MBD_B Drawing

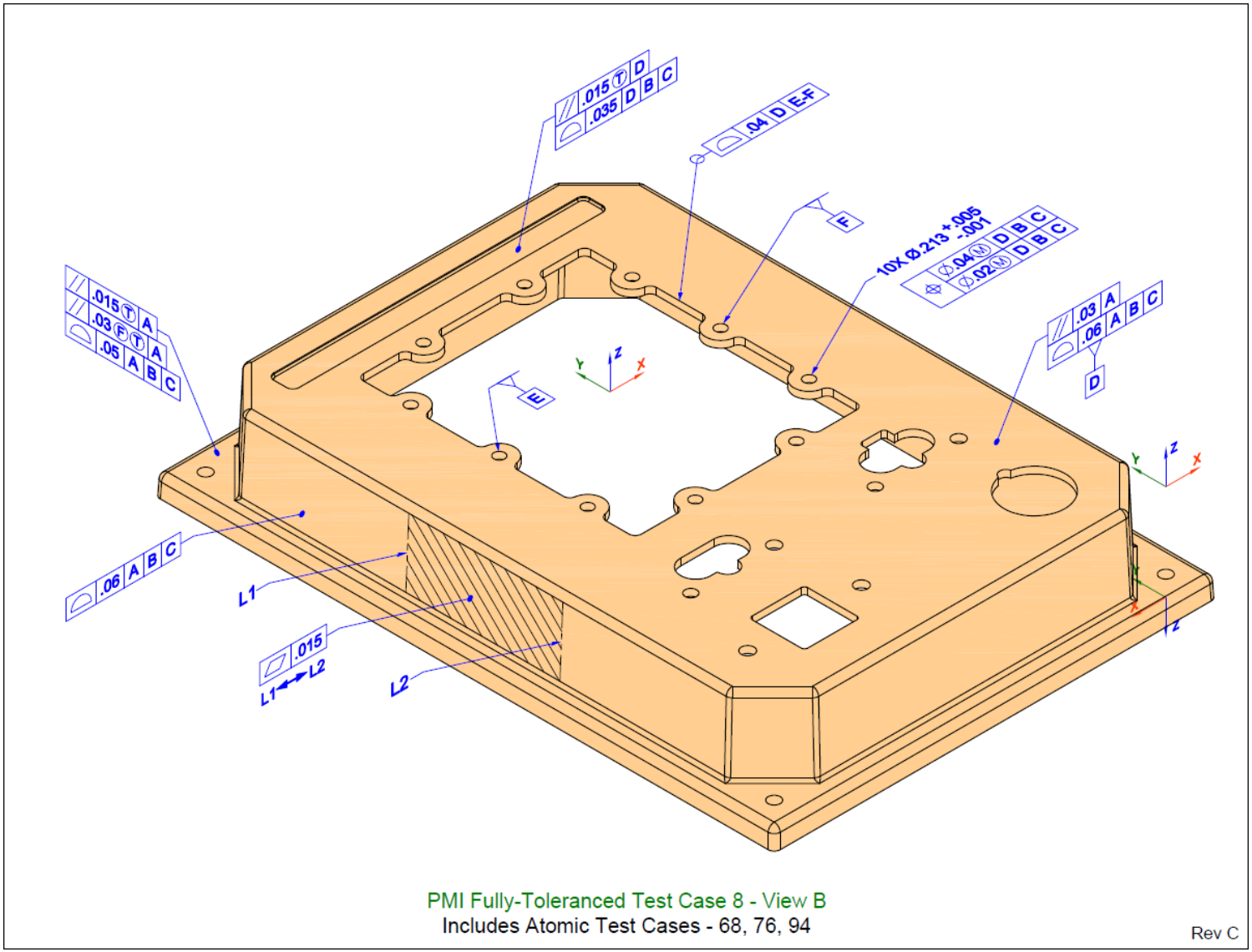

Return to Index

TranscenData

Fully-toleranced Test Case 8
Saved View MBD_B Models

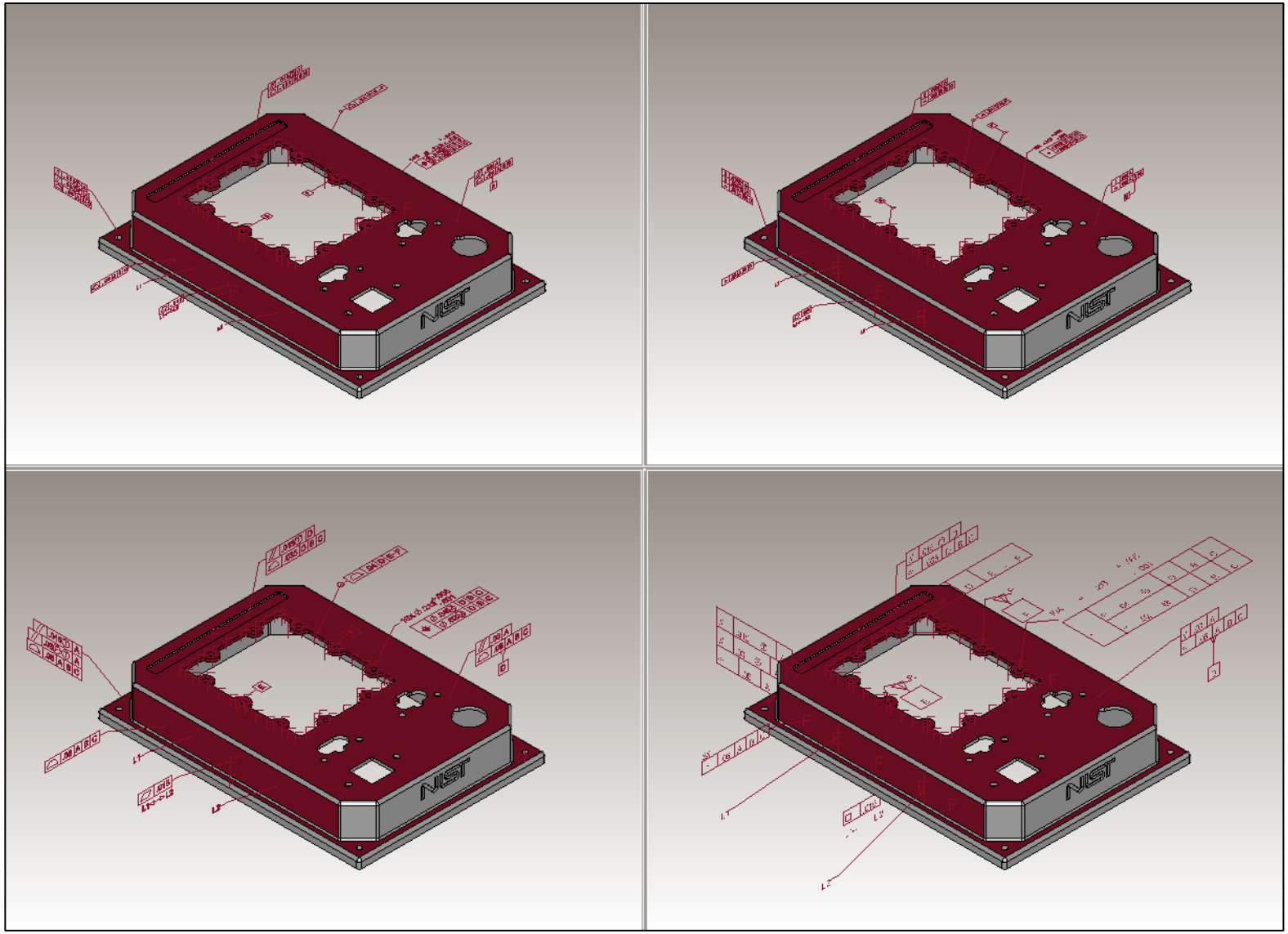

Return to Index

ITI TranscenData

Fully-toleranced Test Case 8
Saved View MBD_C Drawing

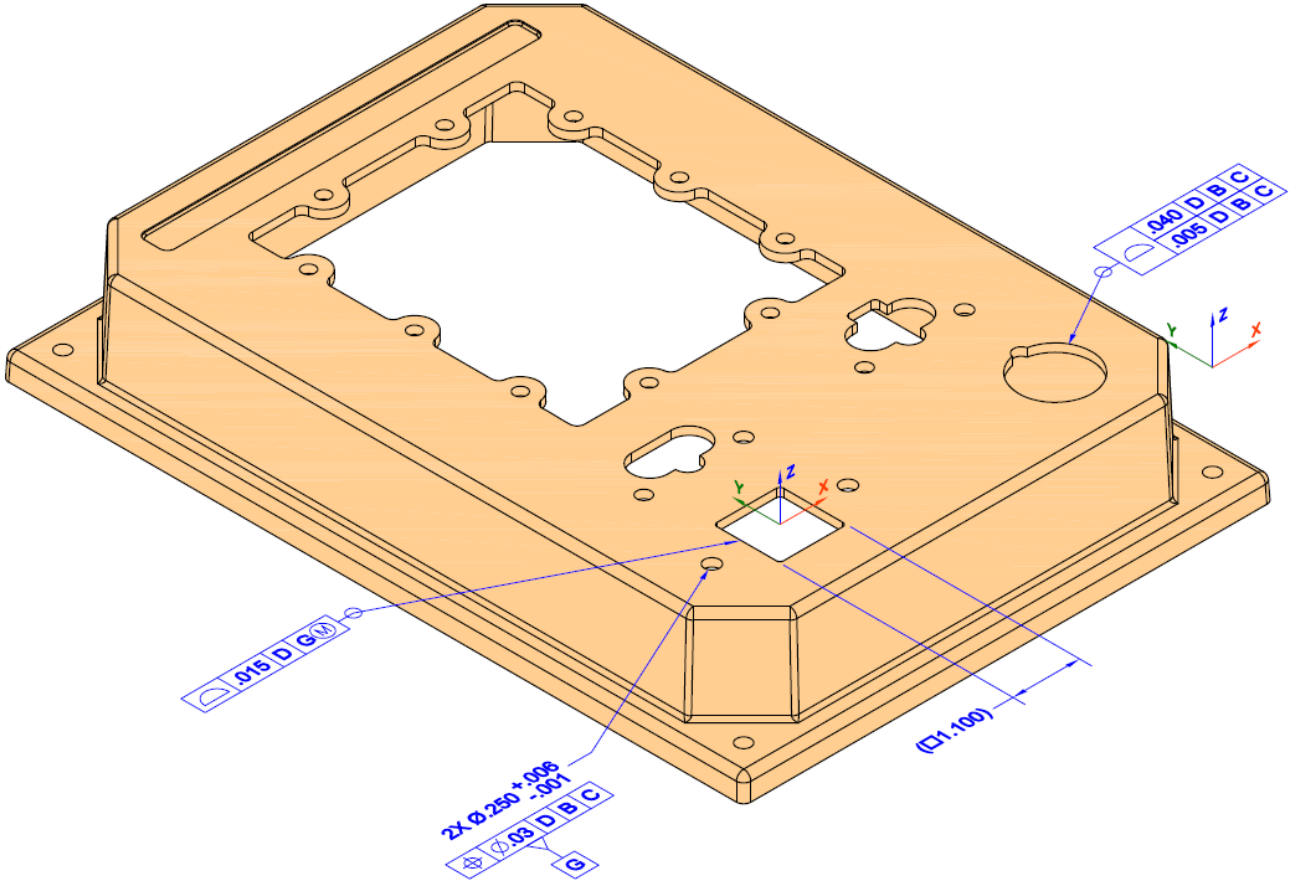

PMI Fully-Toleranced Test Case 8 - View C
Includes Atomic Test Cases - 54

Rev C

Return to Index

ITI TranscenData

Fully-toleranced Test Case 8
Saved View MBD_C Models

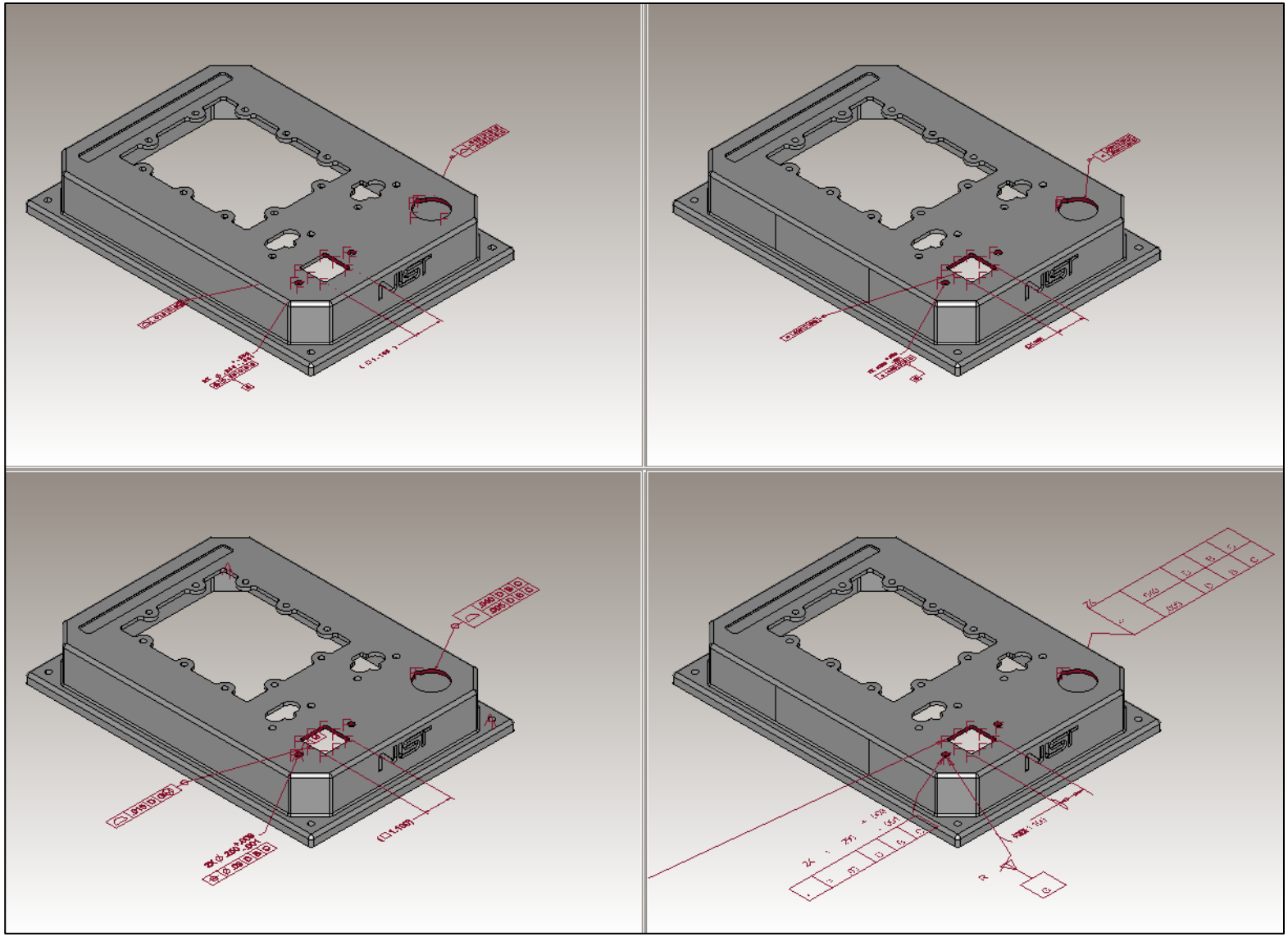

Return to Index

ITI TranscenData

Fully-toleranced Test Case 8
Saved View MBD_D Drawing

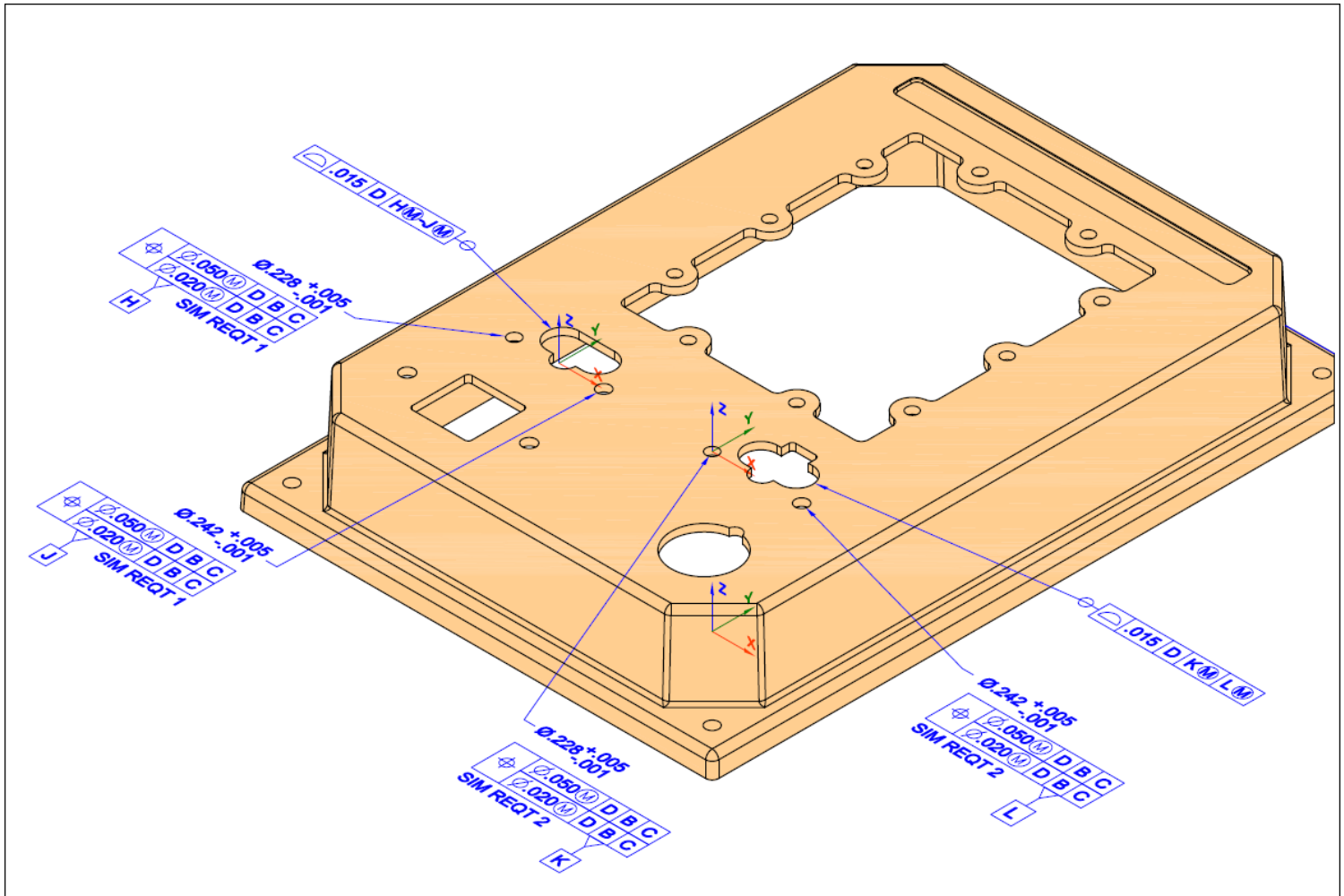

PMI Fully-Toleranced Test Case 8 - View D
Includes Atomic Test Cases - 76, 77, 99

Rev C

Return to Index

TranscenData

Fully-toleranced Test Case 8
Saved View MBD_D Models

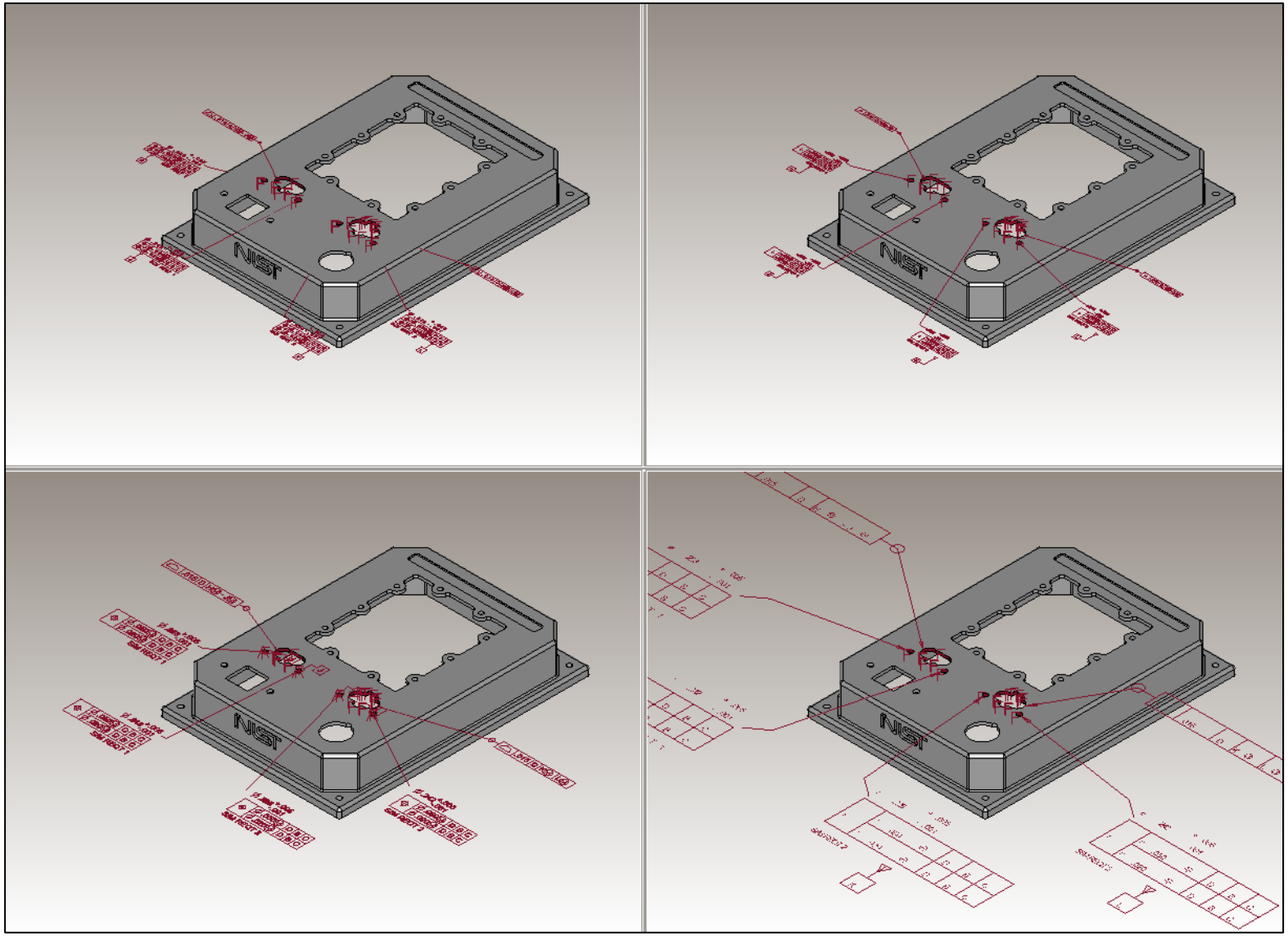

Return to Index

ITI TranscenData

Fully-toleranced Test Case 9
Saved View MBD_A Drawing

Feature and Specification Index
nist_ftc_09_asme1_rd_fsi.pdf

NOTES (UNLESS OTHERWISE SPECIFIED):

1. CAD MODEL _____ REV. __ IS REQUIRED TO COMPLETE PRODUCT DEFINITION.
2. DIRECTLY-TOLERANCED DIMENSIONS AND BASIC DIMENSIONS DEFINED ON THE DRAWING TAKE PRECEDENCE OVER DIMENSIONAL DATA DEFINED BY THE MODEL. OBTAIN ALL OTHER DIMENSIONAL DATA FROM THE MODEL. THE MODEL REPRESENTS BASIC DIMENSIONAL DATA UNLESS OTHERWISE SPECIFIED.
3. APPLICABLE STANDARDS:
   ASME Y14.41-2003 APPLIES TO DATASET.
   ASME Y14.5M-1994 APPLIES TO DIMENSIONING AND TOLERANCING.
4. DIMENSION AND TOLERANCE VALUES SHOWN IN SQUARE BRACKETS [XXX] ARE MILLIMETERS.
5. MATERIAL: (.1195 THICK) 11 GA 304 SST SHT, ASTM A240.
6. UNITS: INCHES

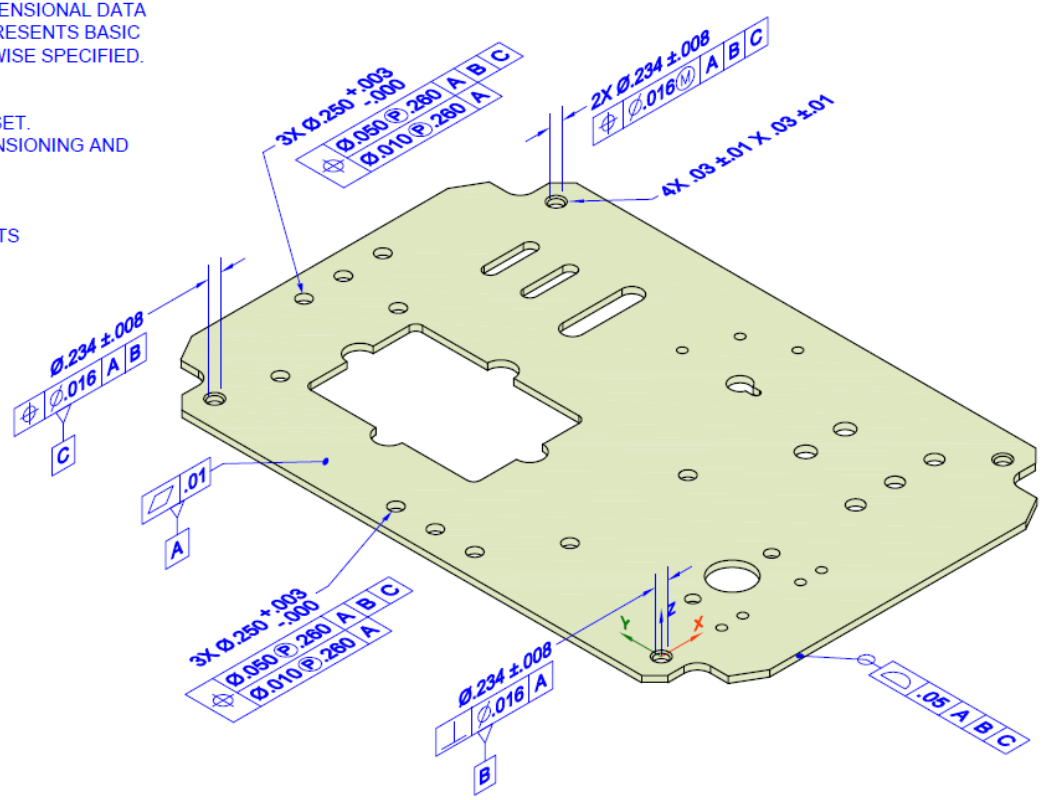

PMI Fully-Toleranced Test Case 9 - View A
Includes Atomic Test Cases - 59, 61

Rev D

Return to Index

TranscenData

Fully-toleranced Test Case 9
Saved View MBD_A Models

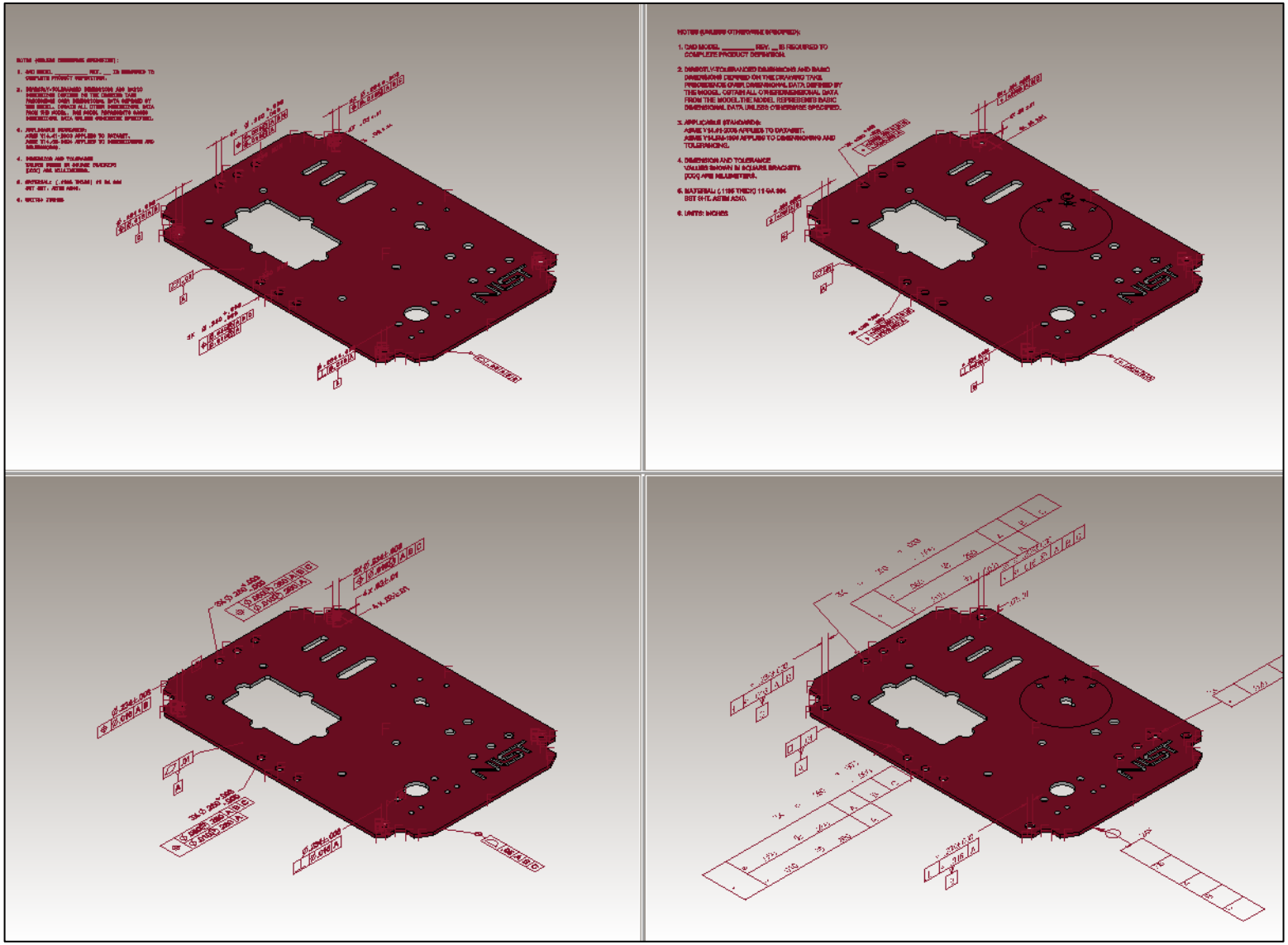

Return to Index

ITI TranscenData

Fully-toleranced Test Case 9
Saved View MBD_B Drawing

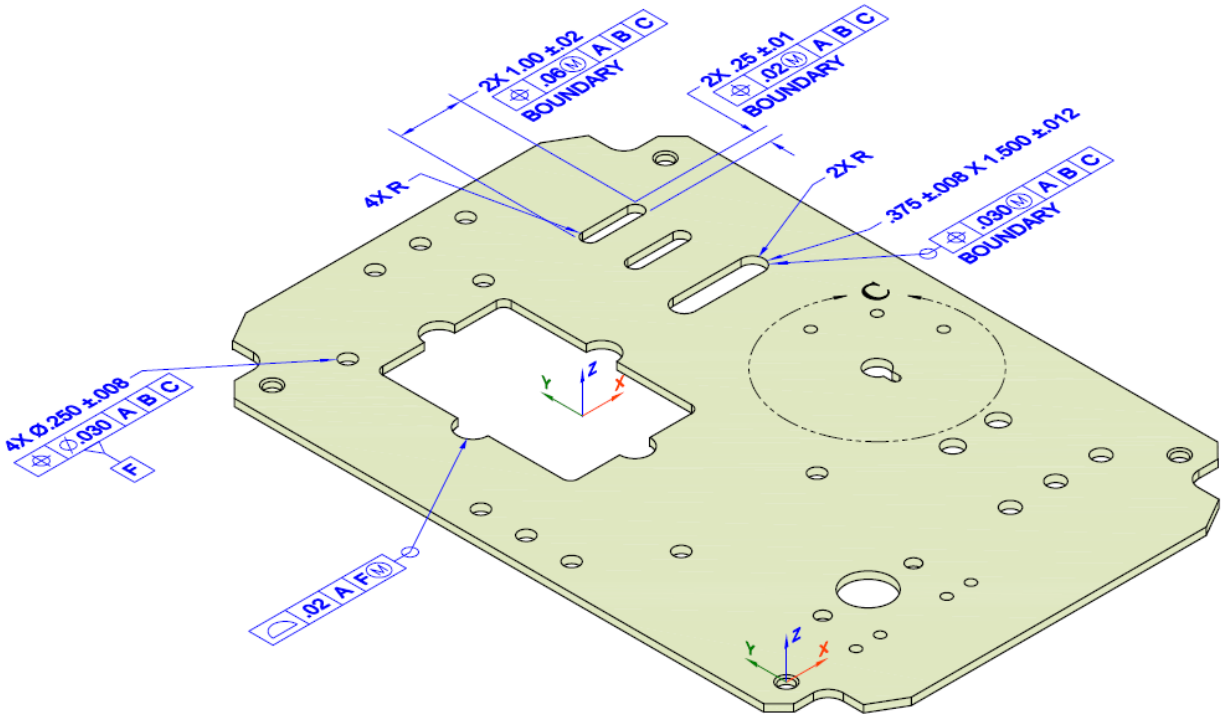

PMI Fully-Toleranced Test Case 9 - View B
Includes Atomic Test Cases - 75, 96, 97

Rev D

Return to Index

TranscenData

Fully-toleranced Test Case 9
Saved View MBD_B Models

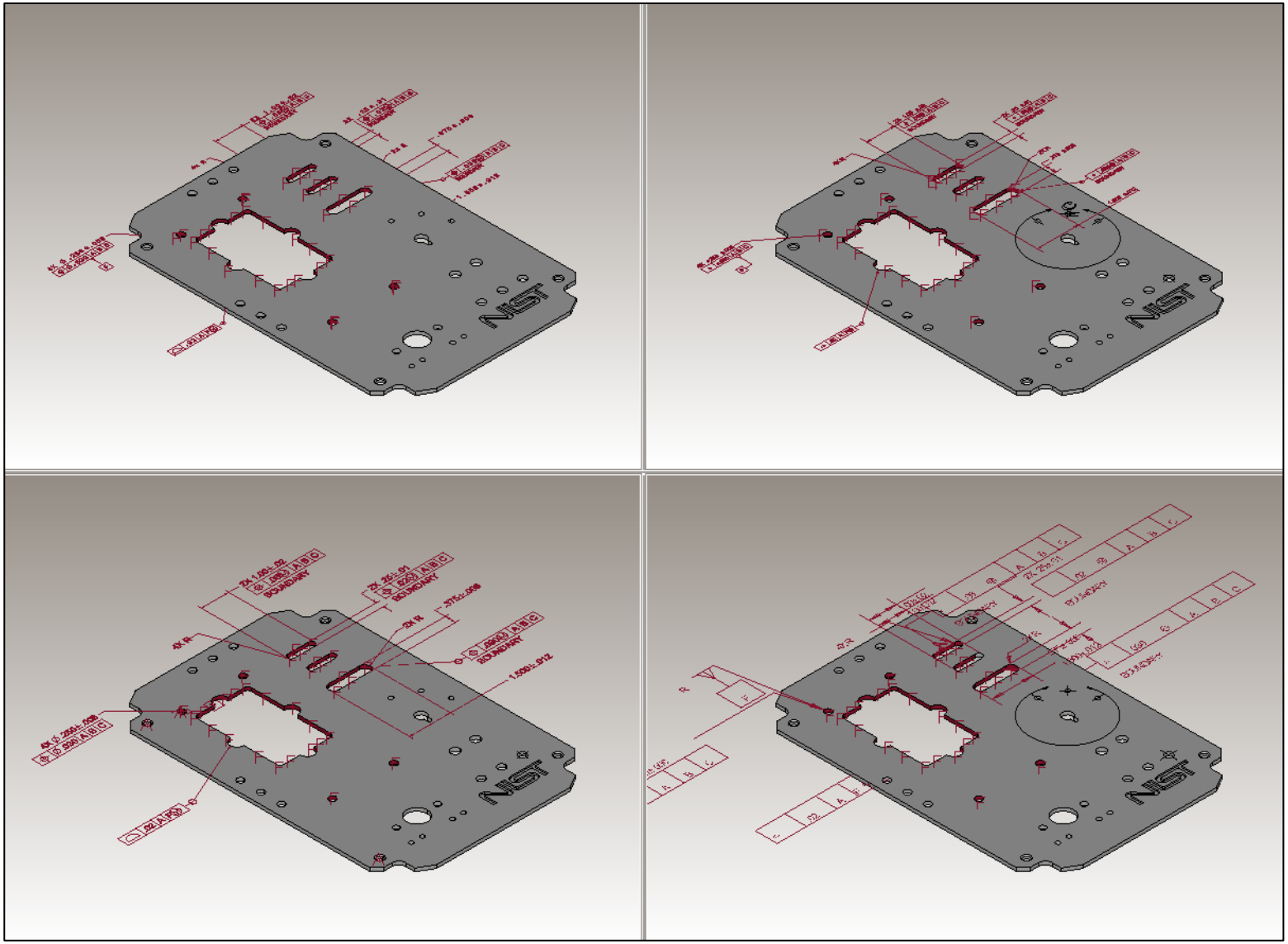

Return to Index

ITI TranscenData

Fully-toleranced Test Case 9
Saved View MBD_C Drawing

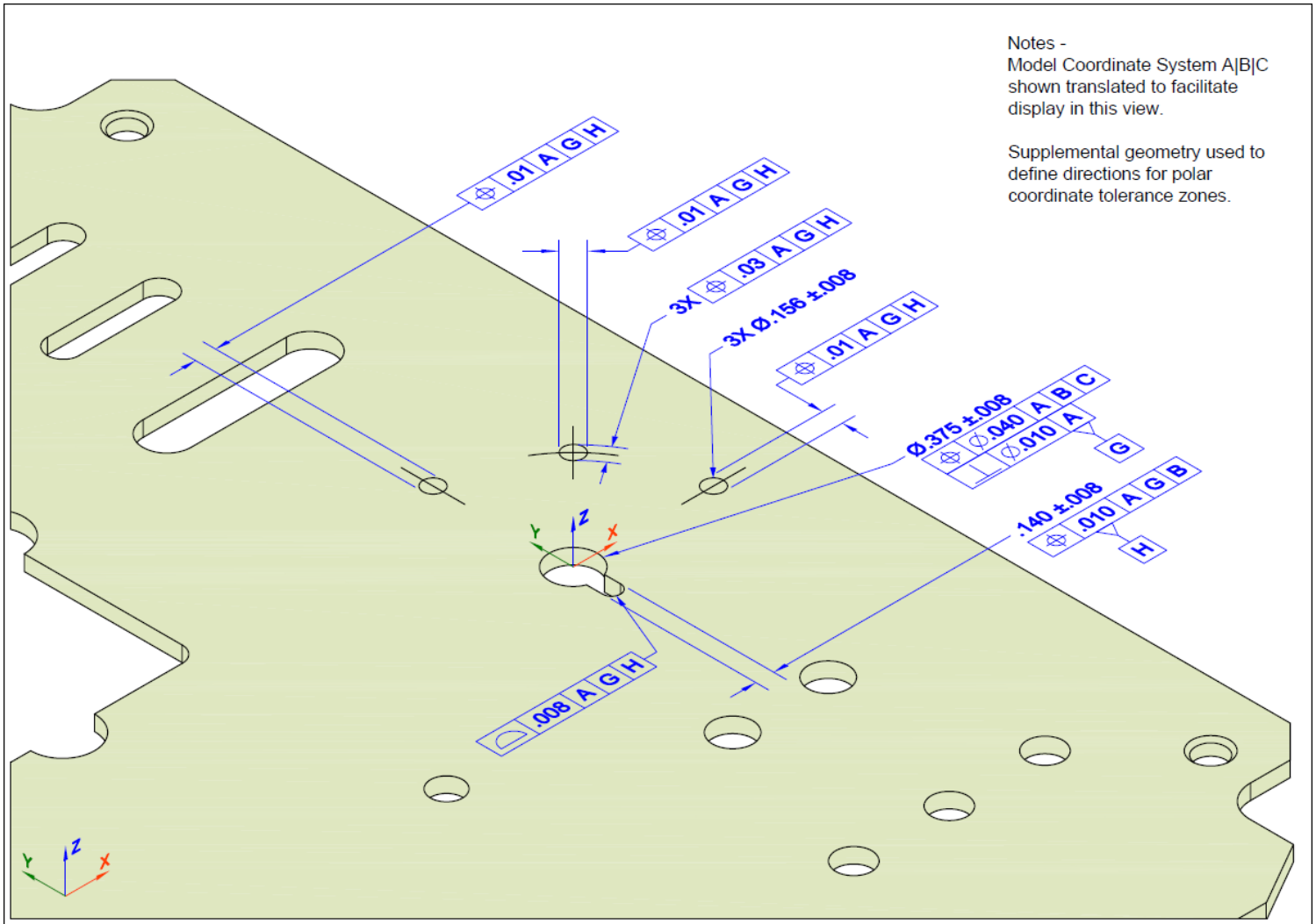

PMI Fully-Toleranced Test Case 9 - View C
Includes Atomic Test Cases - 82

Rev D

Return to Index

TranscenData

Fully-toleranced Test Case 9
Saved View MBD_C Models

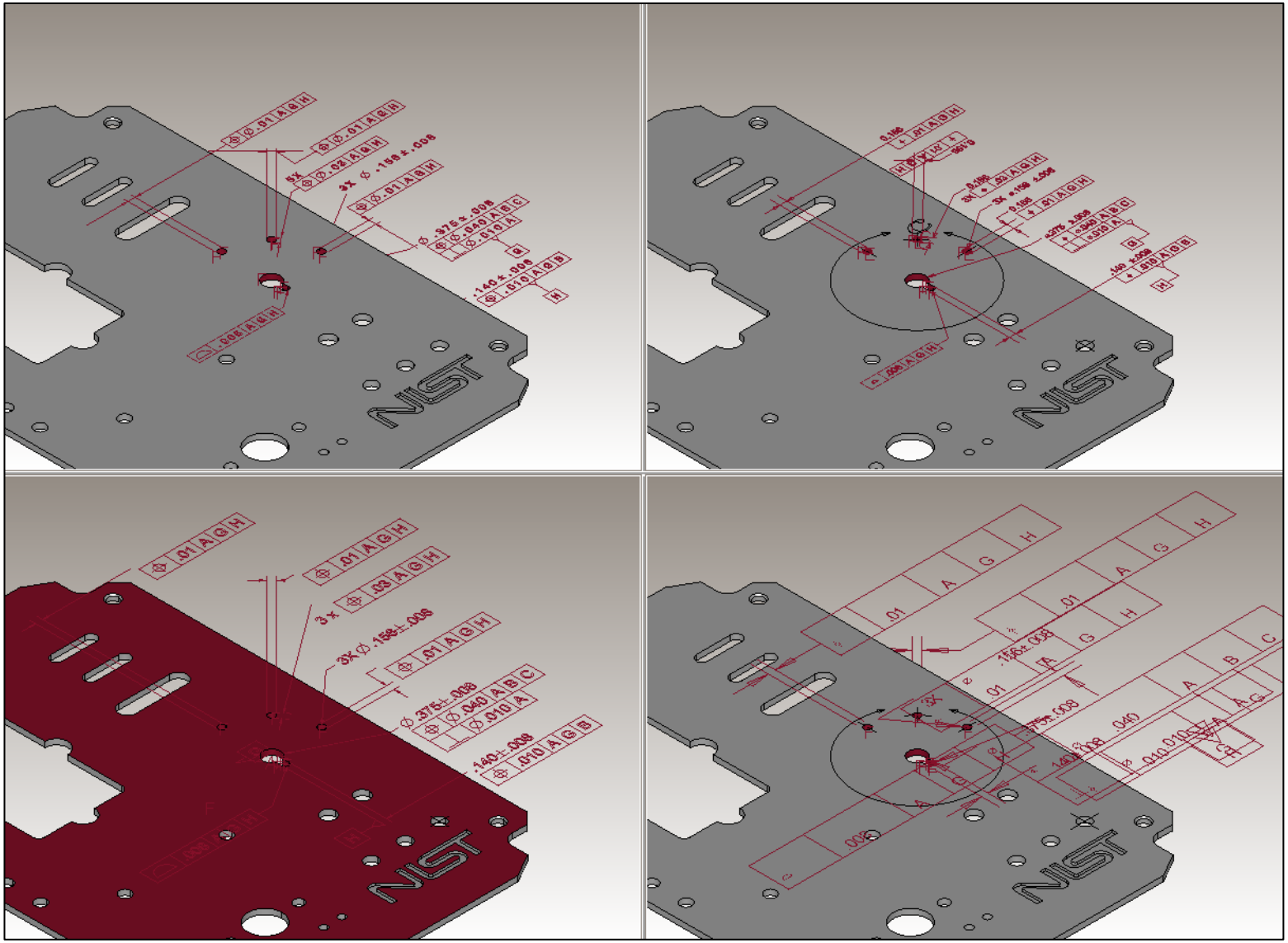

Return to Index

TranscenData

Fully-toleranced Test Case 9
Saved View MBD_D Drawing

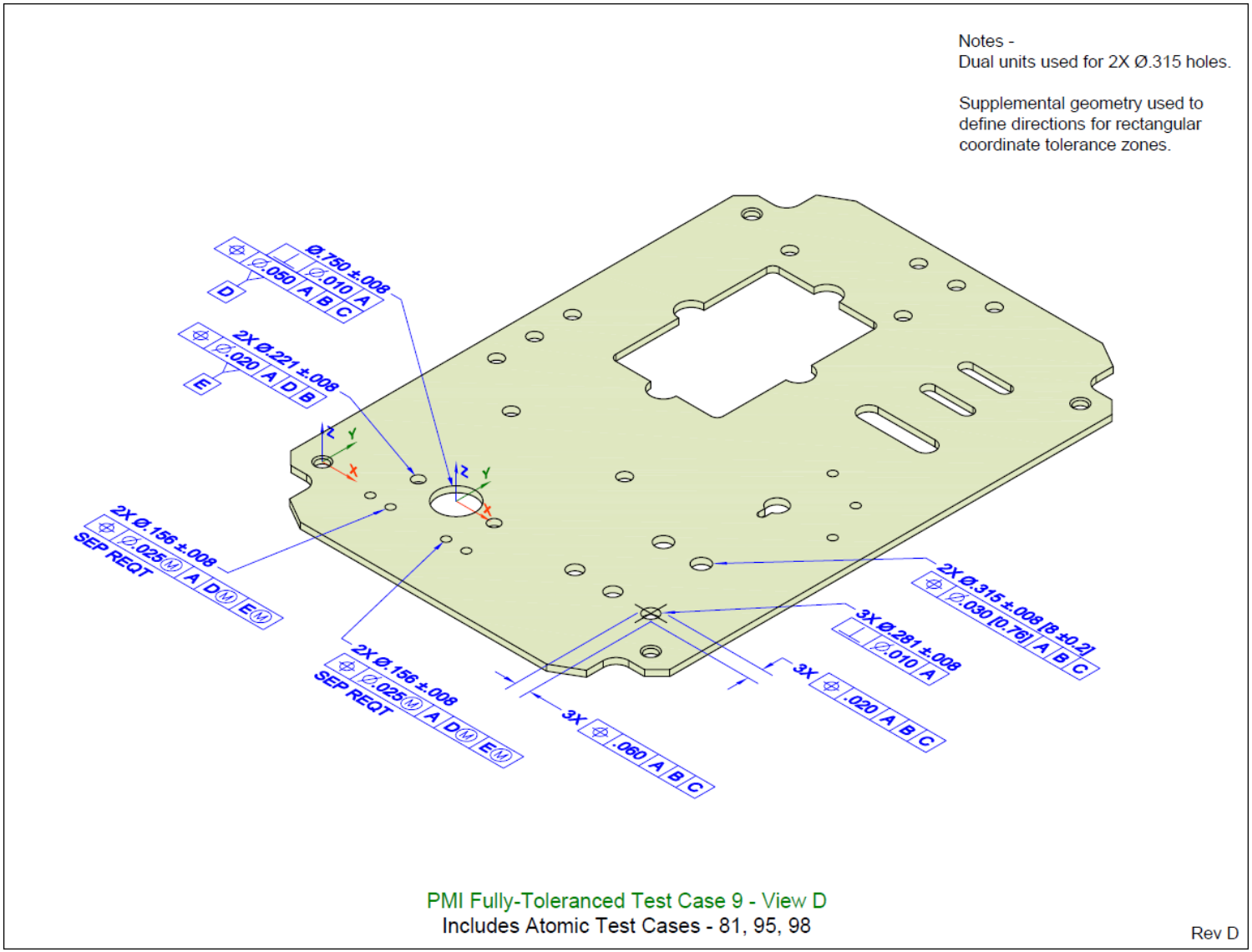

Return to Index

Fully-toleranced Test Case 9
Saved View MBD_D Models

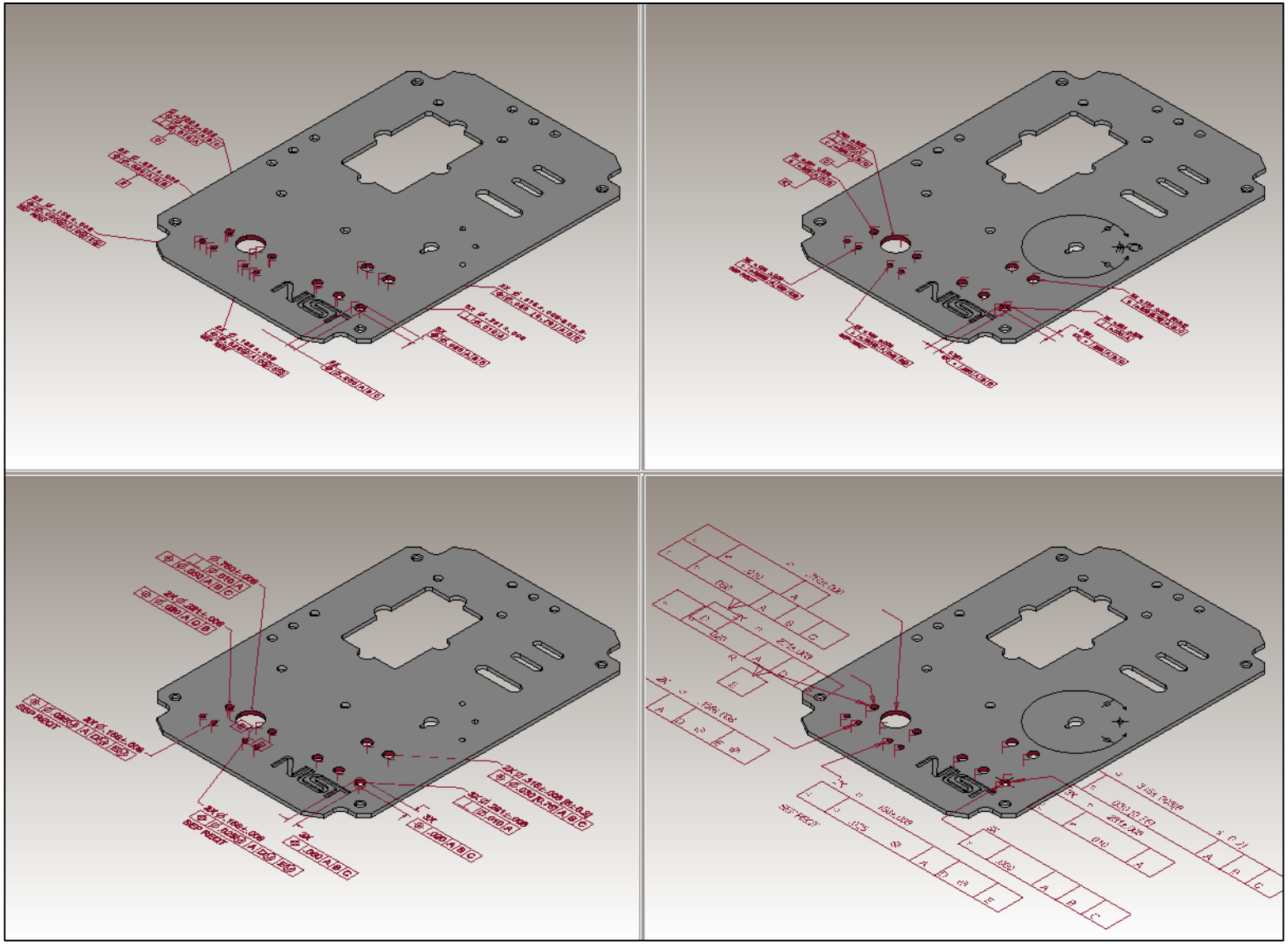

Return to Index

ITI TranscenData