ITI TranscenData

YOUR CENTRAL SOURCE FOR DATA EXCHANGE

NIST MBE PMI Validation & Conformance Testing CTC Model Verification Results February 2015

Doug Cheney
CAD Validation Specialist
ITI TranscenData
Doug.Cheney@TranscenData.com

FOCUS INNOVATION CHALLENGE SOLUTION PARTNERSHIP INTEGRATION

www.TranscenData.com

Any mention of commercial products is for information only; it does not imply a recommendation or endorsement by NIST.

NIST is Supporting the Discrete Part Manufacturing Industry for Long-term Growth

"Our strategic direction is the Model-Based Enterprise (MBE)"

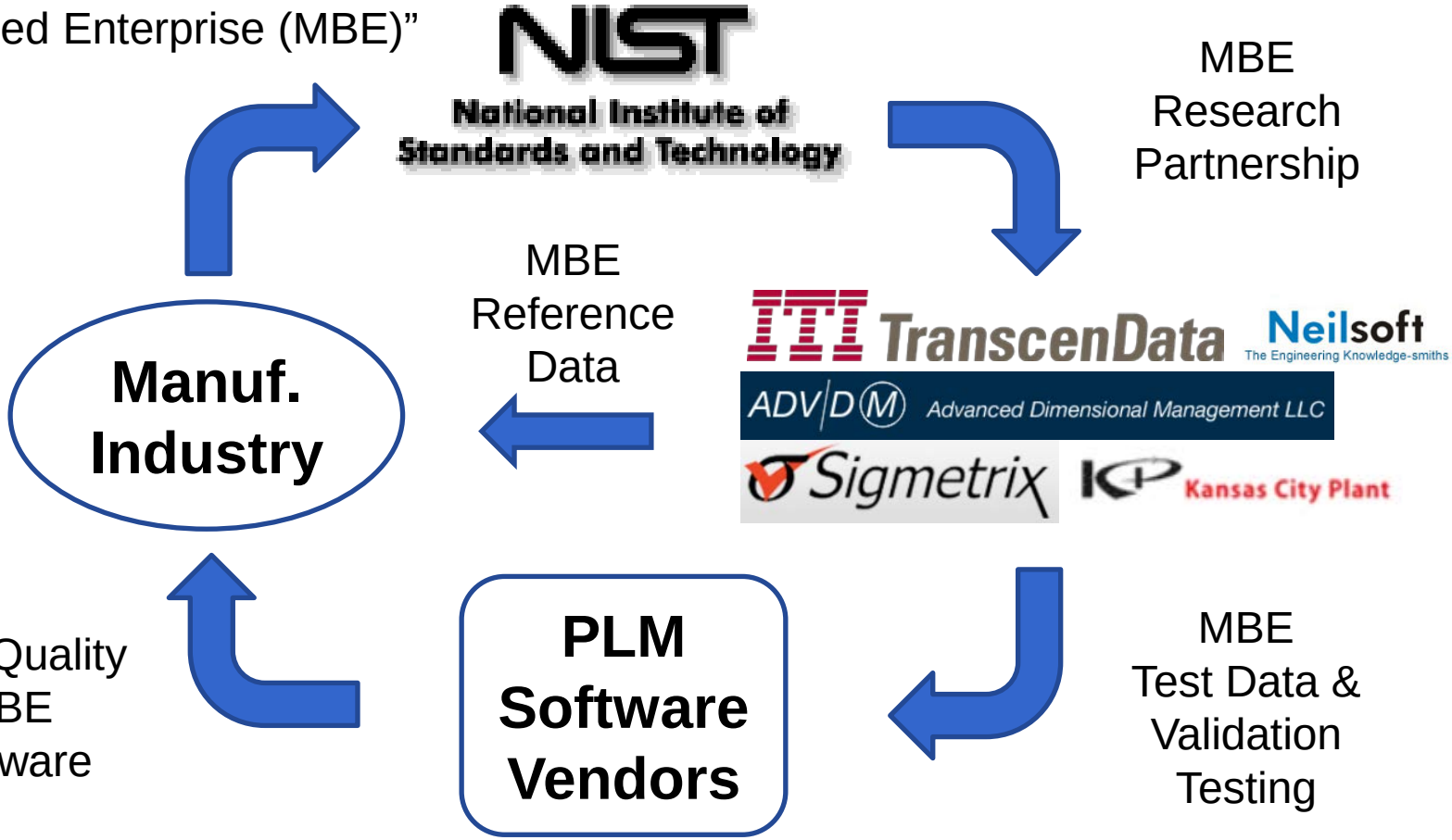

NIST MBE PMI Validation and Conformance Testing Program Objectives

Develop **test cases**,
test models and
software **algorithms** sufficient to
measure conformance of CAD systems to
American Society of Mechanical Engineers (ASME)
standards for Product and Manufacturing Information
(PMI).

ASME Y14.5	Dimensioning and Tolerancing
ASME Y14.41	Digital Product Data Definition Practices

Web site: http://go.usa.gov/mGVm

Example Combined Test Case (CTC) and Test Models

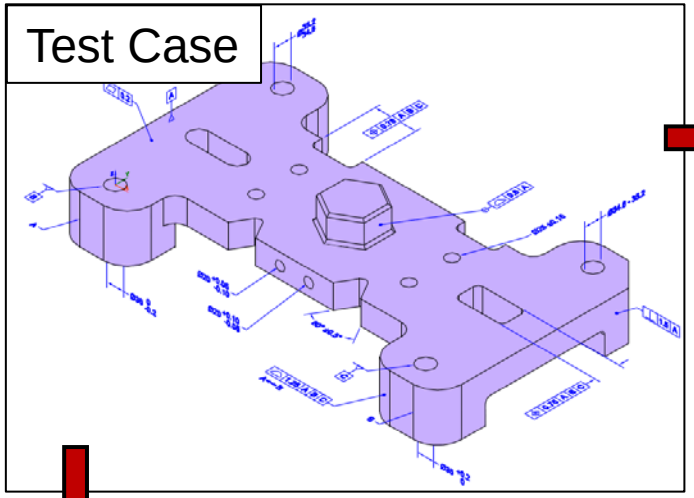

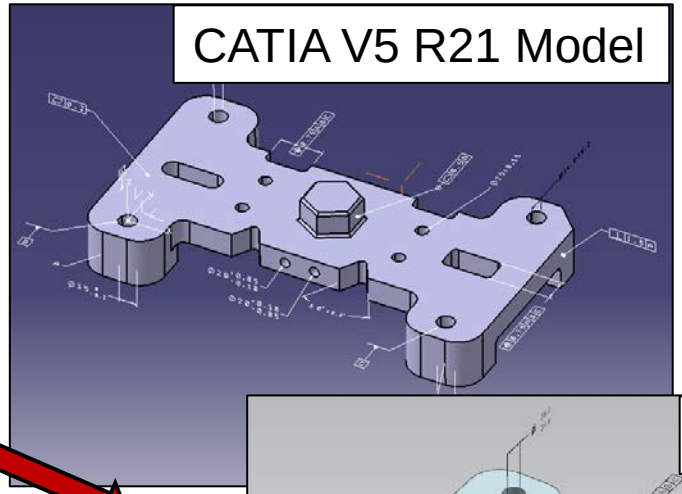

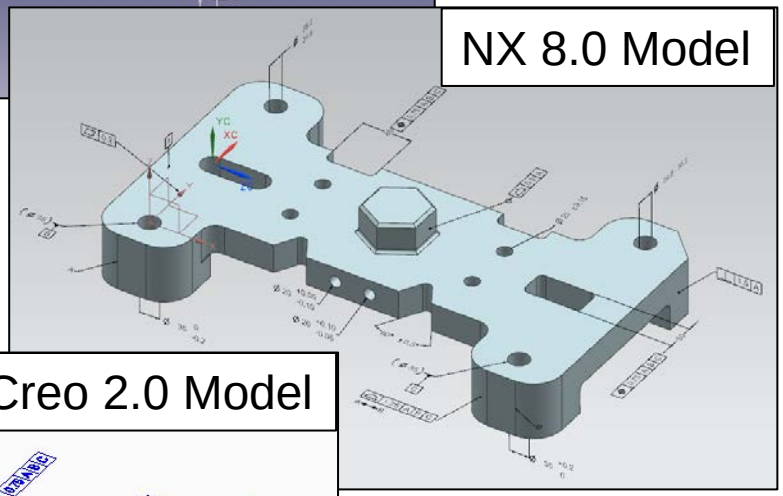

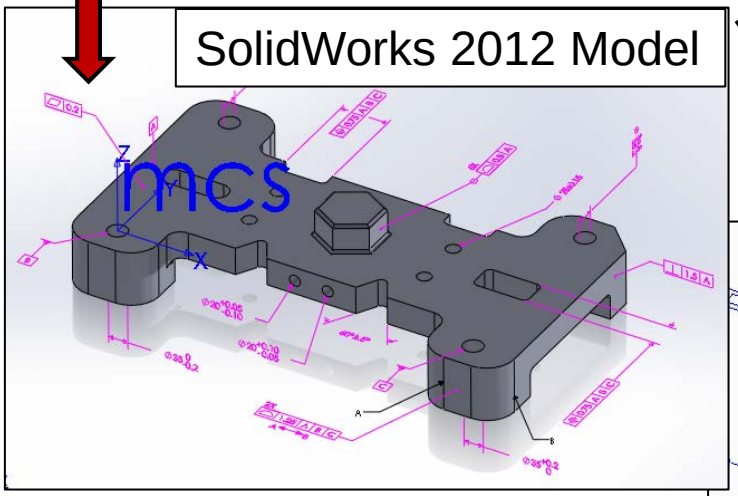

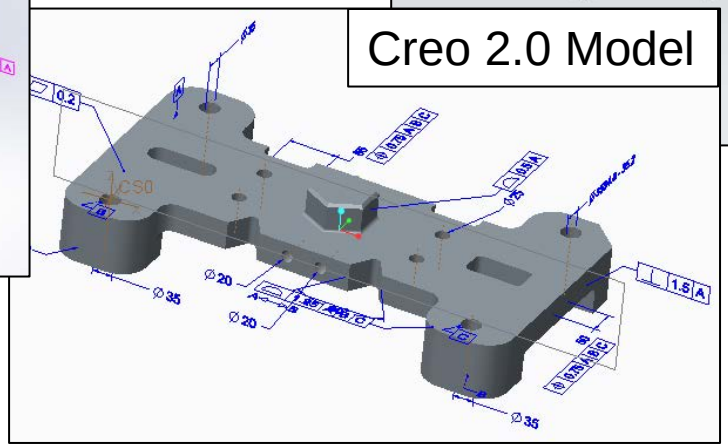

TranscenData

Conformance Testing Terminology

PMI element: An annotation, coordinate system, supplemental geometry entity, or saved view

Presentation: What the human user sees (Visual consumption)

Representation: What the downstream software receives (Automated consumption)

Verification: How well each PMI element is modeled (CAD system capability)

Validation: How well each PMI element is translated (Translator capability)

ITI TranscenData

Verification Testing Methodology

- The representation and presentation of each PMI element is compared to the test case specification
- Any differences, which cannot be resolved with an alternate modeling technique, are categorized as a:
  - Representation Limitation
  - Presentation Limitation
  - Style Difference (representation and presentation are correct but different between systems)
- Each limitation/difference is grouped by characteristic and type
- An example of each characteristic-type combination is documented in this presentation
- The following slide indexes (underlined) these examples

ITI TranscenData

Verification Characteristics (and index to examples)

Representation Limitation

- Annotation structure
- Annotation parameters
- Annotation geometry
- Coordinate system structure
- Coordinate system parameters
- Supplemental geometry structure
- Supplemental geometry parameters

Style Difference

- Annotation structure
- Annotation geometry
- Supplemental geometry structure
- Product geometry parameters

If a characteristic is not underlined, no limitations were found in this dataset.

Presentation Limitation

- Annotation visibility
- Annotation color
- Annotation name
- Annotation layout
- Annotation location
- Annotation orientation
- Annotation lines
- Annotation text
- Coordinate system visibility
- Coordinate system color
- Coordinate system name
- Coordinate system text
- Supplemental geometry visibility
- Supplemental geometry color
- Saved view structure
- Saved view name
- Saved view frustum

ITI TranscenData

Verification Capability Measurement Methodology

- Each PMI element limitation/difference is counted by category, characteristic, and type
- The subtotal per characteristic is divided by the subtotal of PMI elements to which it applies
  - Multiple limitations/differences of the same characteristic for the same PMI element are only counted once
- The total per category is divided by the total PMI elements
  - Multiple limitations/differences of the same category for the same PMI element are only counted once, with representation > presentation
- The following slides show these statistics for this dataset
- The name of each CAD system is generalized according to the overall results (“CAD A” better than “CAD B”…)

ITI TranscenData

Representation Limitation and Style Difference Counts by Characteristic and Type (across all systems)

Representation Limitations	**96**
Annotation structure	**19**
Countersink diameter DIM not defined	1
DIM defined as part of DTS	4
FCF extension line defined as separate DIM	9
FCF projected tolerance zone defined as separate DIM	1
FCF text defined as separate note	3
Threaded hole depth DIM not defined	1
Annotation parameters	**11**
DIM origin not defined	1
DIM parameter defined with encoded text	3
FCF between-basis defined with encoded text	4
FCF parameter defined with encoded text	3
Annotation geometry	**18**
DIM associated with extra face	1
DIM not associated with complete set of faces	4
DTS associated with extra face	1
DTS not associated with face	1
DTS not associated with SG point	3
FCF associated with extra face	5
FCF not associated with SG curve	3
Coordinate system structure	**48**
CS not linked to FCF DRF	48

Style Differences	**48**
Product geometry parameters	**1**
Threaded hole diameter different than other systems	1
Annotation structure	**19**
DTS requires DFS to be defined	18
FCF requires DFS to be defined	1
Annotation geometry	**11**
DFS edge association is extraneous	2
DIM edge association is extraneous	9
Supplemental geometry structure	**17**
DTS target area is non-solid surface on solid face	6
DTS target area is subdivided solid face	1
DTS target area is wireframe region on solid face	5
FCF limited area definition inconsistent with target area	1
FCF limited area is non-solid surface on solid face	3
FCF limited area is subdivided solid face	1

Abbrev	Definition
AN	Annotation
CS	Coordinate system
DFS	Datum feature symbol
DIM	Dimension
DRF	Datum reference frame
DTS	Datum target symbol
FCF	Feature control frame
PG	Product geometry
SG	Supplemental geometry
VW	View

ITI TranscenData

Presentation Limitation Counts by Characteristic and Type (across all systems)

Presentation Limitations	**108**
Annotation visibility	**7**
DFS is extraneous when DTS is defined	2
DFS not visible in specified view	1
DIM not visible in specified view	1
DTS visible in wrong view	3
Annotation layout	**20**
Counterbore DIM defined as two separate DIM's	4
Countersink DIM defined as two separate DIM's	4
DIM limits displayed in reversed order	1
DIM limits not displayed horizontally	2
DTS target area diameter defined as separate DIM	1
FCF text displayed above rather than below	2
FCF text displayed on right rather than below	3
Threaded hole DIM defined as two separate DIM's	3
Annotation location	**12**
DFS not attached to FCF	8
DFS overlaps DIM graphics	1
DFS partially buried in solid	1
FCF partially buried in solid	2
Annotation orientation	**4**
DIM text orientation is wrong	1
DTS text is backwards in this view	3
Annotation lines	**10**
DFS has no extension line	10
Annotation text	**22**
DIM has extraneous space	11
DTS text is extraneous	2
FCF missing note text	2
FCF missing projected tolerance zone length	1
FCF text is extraneous	6

Coordinate system visibility	**4**
CS visible in wrong view	4
Coordinate system name	**2**
CS name not same as DRF	2
Coordinate system text	**4**
CS name displayed with extra large text	4
Supplemental geometry visibility	**7**
SG curve visible in wrong view	2
SG point visible in wrong view	5
Saved view structure	**8**
View cannot contain annotations on different planes	8
Saved view frustum	**8**
View camera position not defined	8

Abbrev	Definition
AN	Annotation
CS	Coordinate system
DFS	Datum feature symbol
DIM	Dimension
DRF	Datum reference frame
DTS	Datum target symbol
FCF	Feature control frame
PG	Product geometry
SG	Supplemental geometry
VW	View

ITI TranscenData

Verification Percentages by Characteristic and System

Representation Limitations	Element Count	CAD A	CAD B	CAD C	CAD D
Annotation structure	127	98%	94%	98%	95%
Annotation parameters	127	96%	99%	98%	98%
Annotation geometry	127	100%	96%	98%	92%
Coordinate system structure	12	**0%**	**0%**	**0%**	**0%**
Coordinate system parameters	12	100%	100%	100%	100%
Supplemental geometry structure	6	100%	100%	100%	100%
Supplemental geometry parameters	6	100%	100%	100%	100%

Presentation Limitations	Element Count	CAD A	CAD B	CAD C	CAD D
Annotation visibility	127	100%	99%	96%	99%
Annotation color	127	100%	100%	100%	100%
Annotation name	127	100%	100%	100%	100%
Annotation layout	127	98%	96%	93%	98%
Annotation location	127	99%	100%	94%	98%
Annotation orientation	127	100%	100%	98%	99%
Annotation lines	127	100%	97%	96%	99%
Annotation text	127	98%	**89%**	100%	96%
Coordinate system visibility	12	100%	100%	100%	**67%**
Coordinate system color	12	100%	100%	100%	100%
Coordinate system name	12	100%	100%	**83%**	100%
Coordinate system text	12	100%	100%	100%	**67%**
Supplemental geometry visibility	6	100%	100%	100%	**0%**
Supplemental geometry color	6	100%	100%	100%	100%
Saved view structure	8	100%	100%	100%	**0%**
Saved view name	8	100%	100%	100%	100%
Saved view frustum	8	100%	100%	100%	**0%**

PMI Element	Element Count per Test Case 1	2	3	4	5	Total
Annotation	19	40	28	20	20	127
Coordinate System	1	4	3	3	1	12
Supplemental Geometry Entity	0	2	0	1	3	6
Saved View	1	3	1	1	2	8
Total:	21	49	32	25	26	**153**

Each percentage is calculated using this ratio:

$$\frac{\text{(Element count – Limitation count)}}{\text{Element count}}$$

The limitation count excludes limitations with the same characteristic (but different types) on the same PMI element.

Percentages less than 90% are shown in **bold** font.

TranscenData

Verification Percentages by System

	CAD A	CAD B	CAD C	CAD D
No Limitations	85%	74%	69%	67%
Presentation Limitations only	2%	10%	18%	14%
Representation Limitations	13%	16%	13%	19%
Representation Level	87%	84%	87%	81%

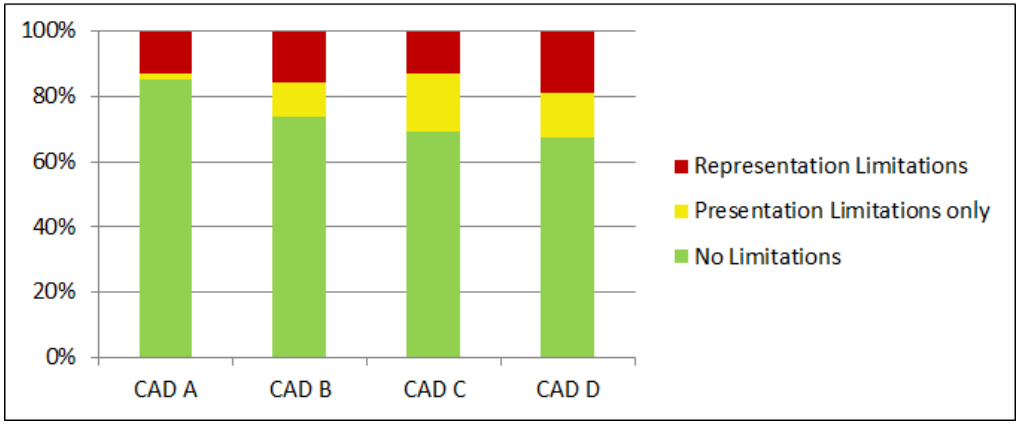

"No Limitations" measures the capability for both automated and visual consumption and is calculated as 100% less the other limitation percentages.

"Representation Level" measures the capability for automated consumption only and is calculated as 100% less the representation limitations percentage.

The presentation and representation limitation percentages are calculated using this ratio:

$$\frac{\text{Limitation count}}{\text{Element count}}$$

The "Presentation Limitation Only" count excludes presentation limitations that overlap with representation limitations on the same PMI element.

The "Element Count" includes all annotations, coordinate systems, supplemental geometry entities, and saved views specified in the test cases.

Verification Percentages by System - Adjusted

	CAD A	CAD B	CAD C	CAD D
No Limitations	93%	82%	77%	75%
Presentation Limitations only	2%	10%	18%	14%
Representation Limitations	5%	8%	5%	11%
Representation Level	95%	92%	95%	89%

Coordinate system issues excluded

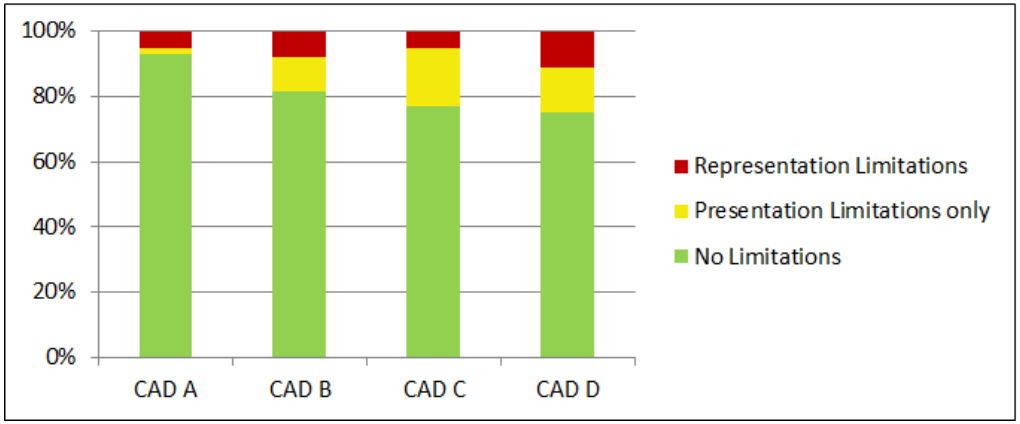

Because all of these CAD systems had the same coordinate system structure limitation (not linked to the datum reference frames), these are the overall verification percentages if coordinate system issues are excluded.

Verification Summary

- The limitation characteristics and types are different for each system.
- All 4 CAD systems are able to **represent** more than 90% of the annotations, supplemental geometry entities, and saved views in this verification test.
- None of the systems are able to represent the expected coordinate system structure.
- The systems vary significantly in their ability to visually **present** the PMI elements as specified in the test cases.
- None of the systems are able to present the complex dimensions (counterbore, countersink, threaded hole) as specified in the test case while representing the correct geometry associations for each component of the dimension.

ITI TranscenData

Verification Characteristics (and index to examples)

Representation Limitation

- Annotation structure
- Annotation parameters
- Annotation geometry
- Coordinate system structure
- Coordinate system parameters
- Supplemental geometry structure
- Supplemental geometry parameters

Style Difference

- Annotation structure
- Annotation geometry
- Supplemental geometry structure
- Product geometry parameters

If a characteristic is not underlined, no limitations were found in this dataset.

Presentation Limitation

- Annotation visibility
- Annotation color
- Annotation name
- Annotation layout
- Annotation location
- Annotation orientation
- Annotation lines
- Annotation text
- Coordinate system visibility
- Coordinate system color
- Coordinate system name
- Coordinate system text
- Supplemental geometry visibility
- Supplemental geometry color
- Saved view structure
- Saved view name
- Saved view frustum

ITI TranscenData

CAD System Representation Limitations for Annotation Structure

Return to Index

Annotation Structure: Countersink diameter DIM not defined

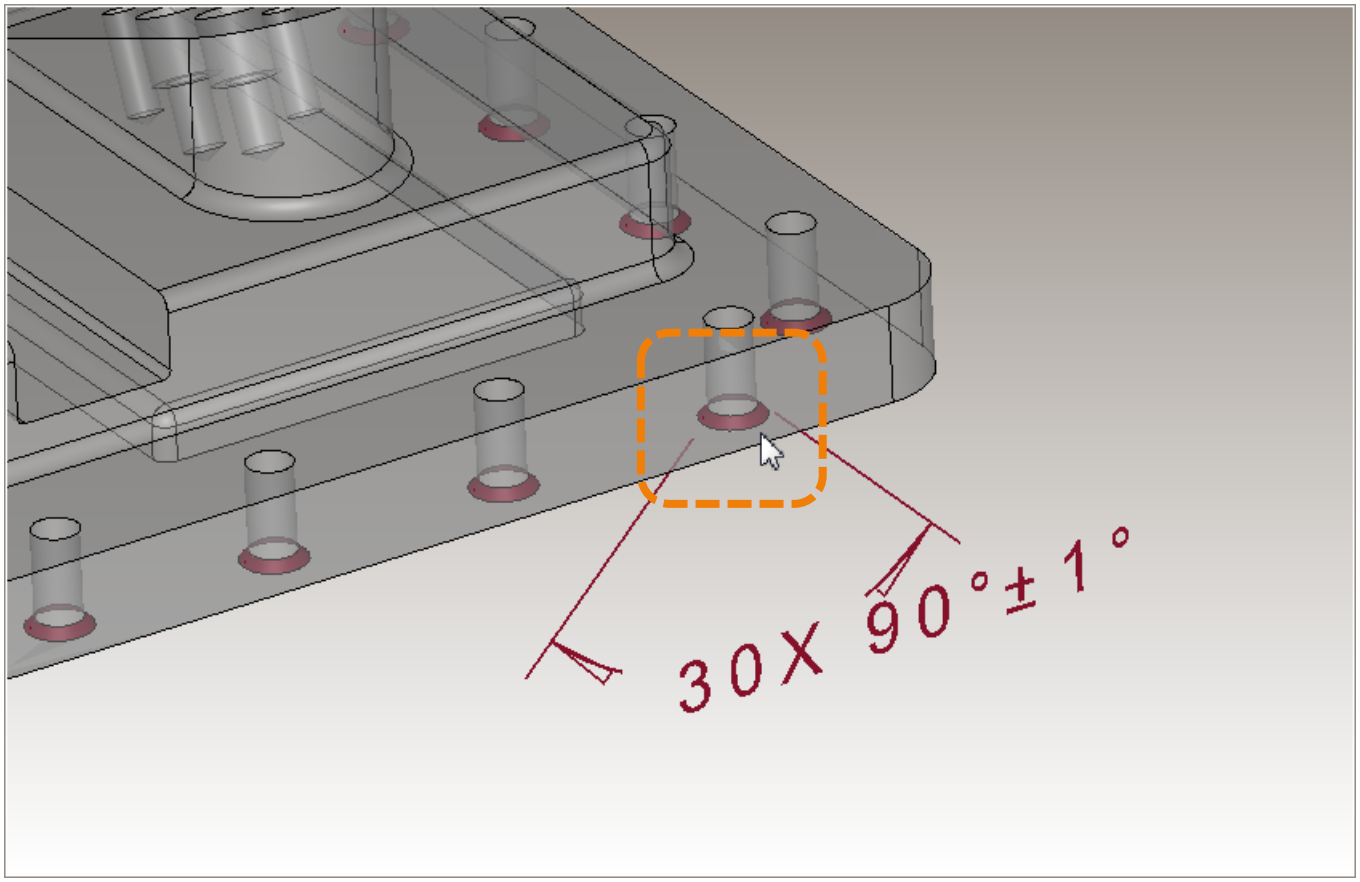

The diameter dimension for the outside (larger, circular) edge of this countersink is not defined.

Return to Index

Annotation Structure: DIM defined as part of DTS

Test Case

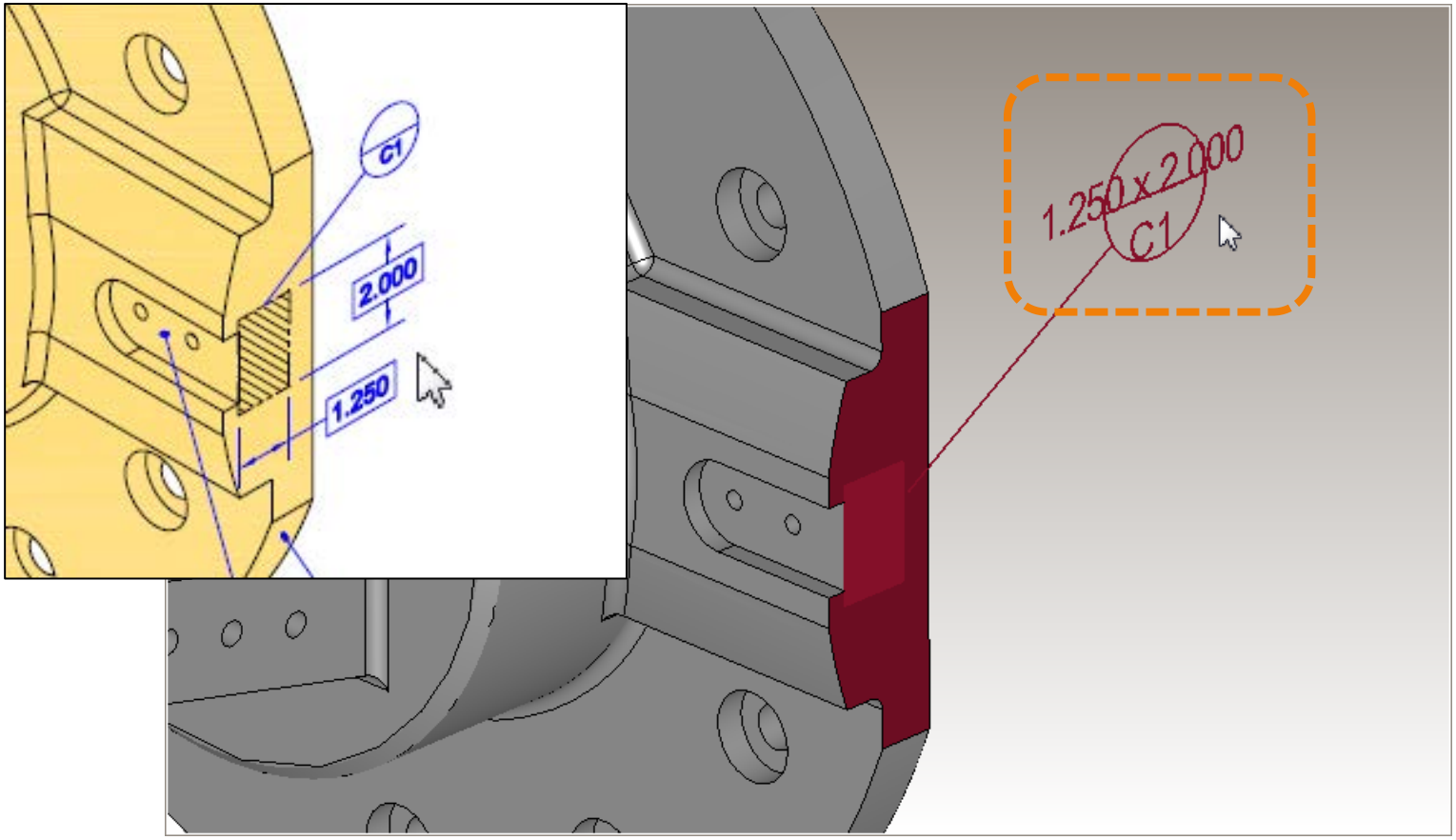

The dimensions for the target area of this datum target are represented as parameters in the datum target symbol and not as separate dimensions.

Return to Index

TranscenData

Annotation Structure: FCF extension line defined as separate DIM

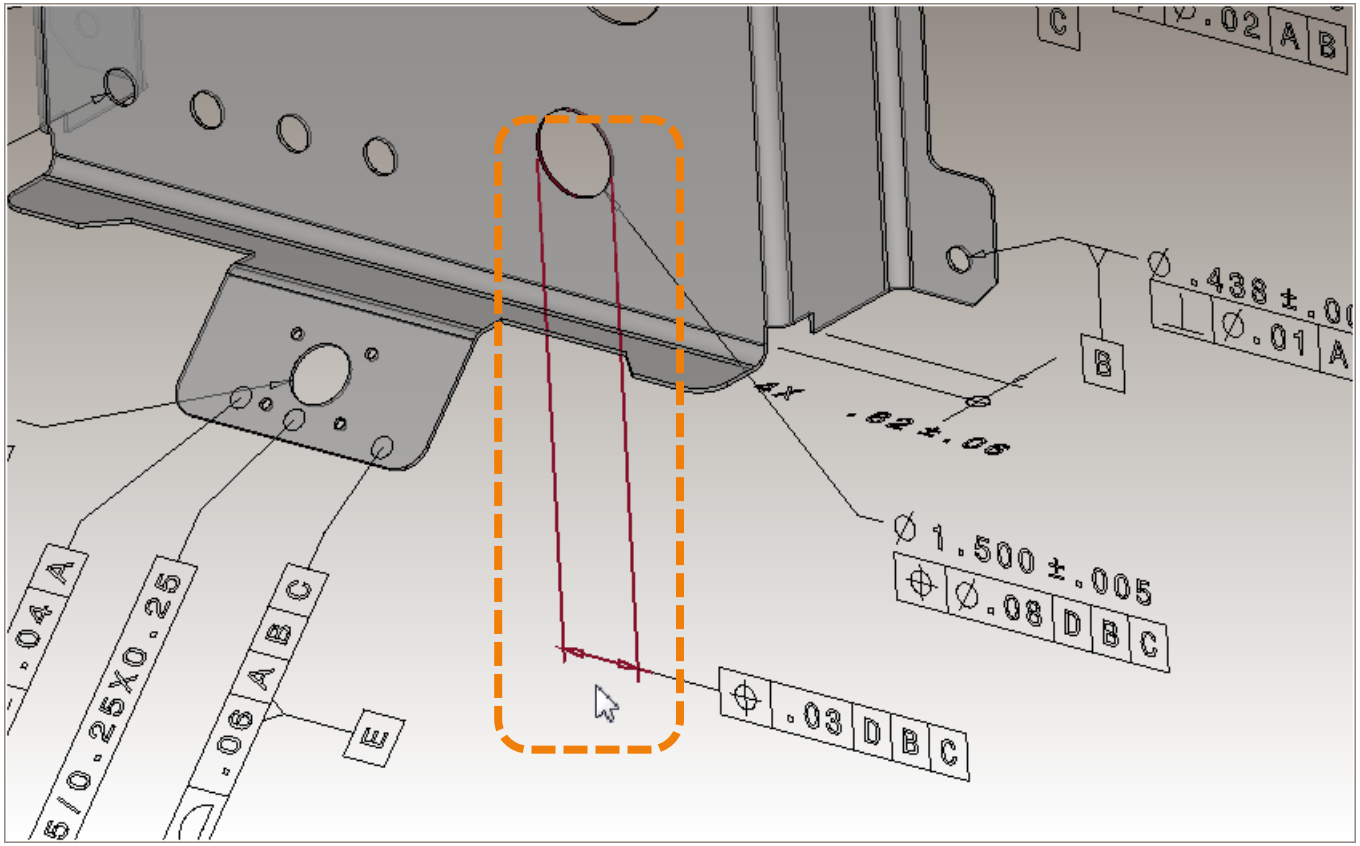

The extension lines for this feature control frame, whose orientation is critical to the tolerance zone definition, are defined as a separate dimension with no displayed value.

Return to Index

TranscenData

Annotation Structure: FCF projected tolerance zone defined as separate DIM

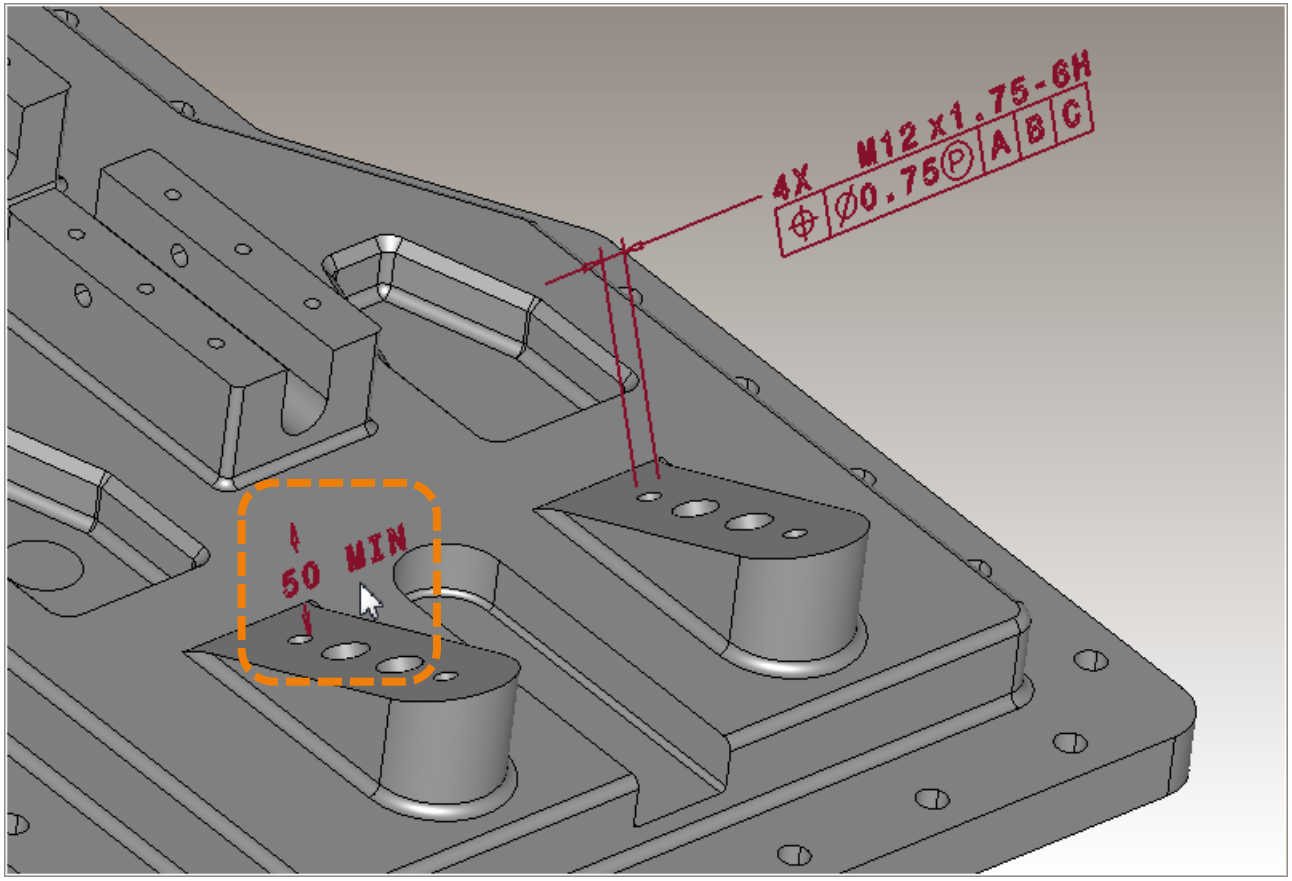

The length of the projected tolerance zone for this feature control frame is defined as a separate dimension.
(See related Presentation Limitation)

Return to Index

Annotation Structure: FCF text defined as separate note

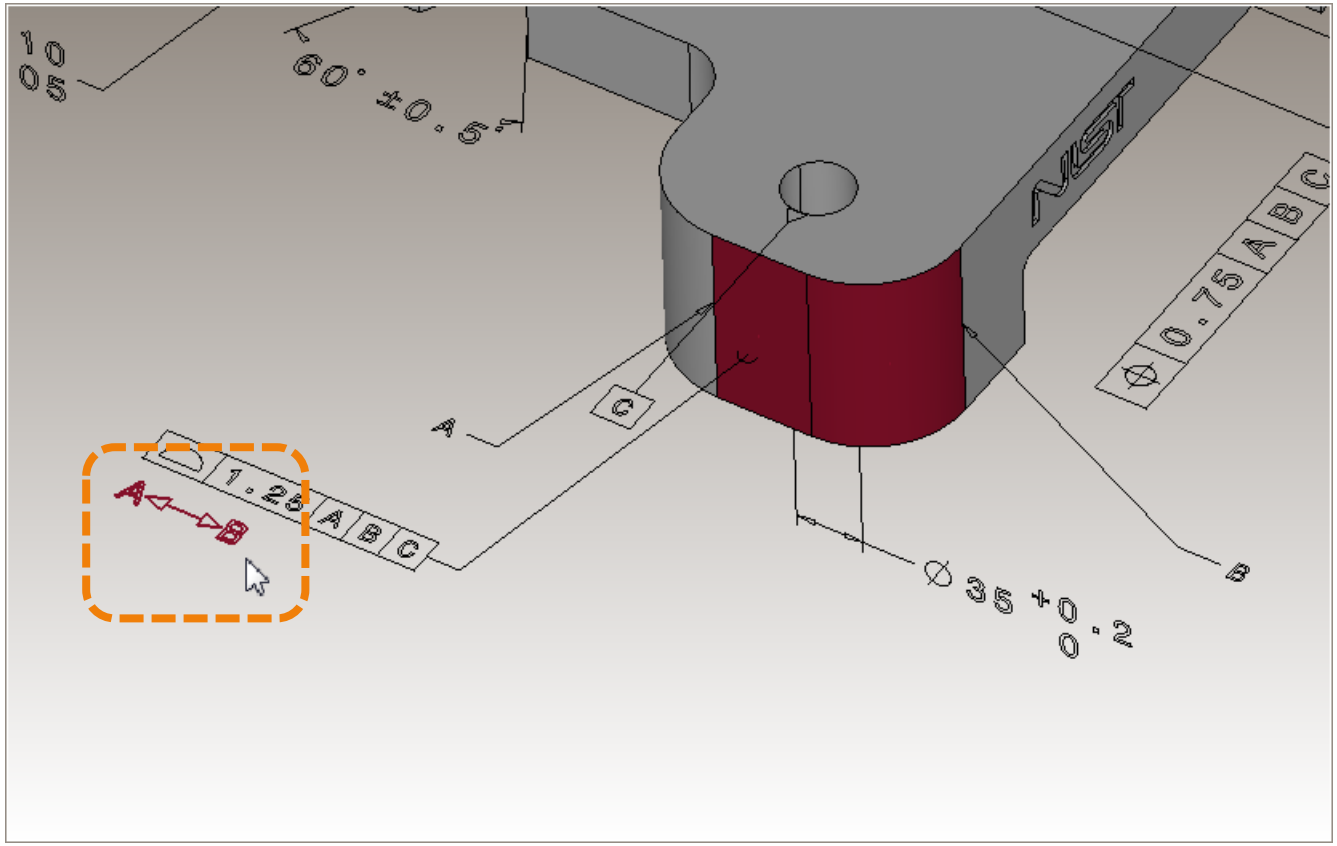

The text which defines the between-basis for this feature control frame is defined as a separate note annotation.

Return to Index

Annotation Structure: Threaded hole depth DIM not defined

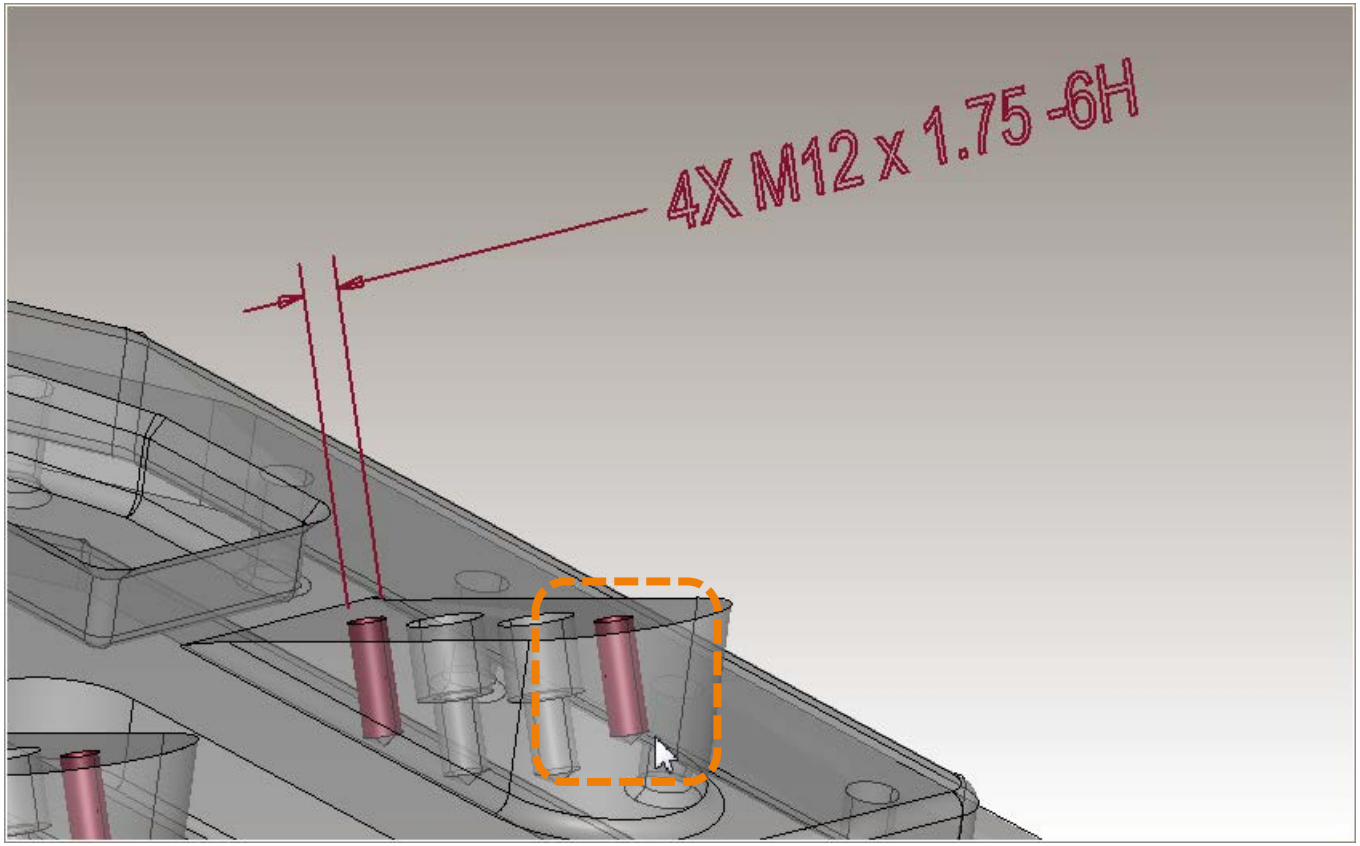

The depth dimension for each threaded hole, between the top (flat) surface and the bottom (circular) edge, is not defined.

Return to Index

CAD System Representation Limitations for Annotation Parameters

Return to Index

Annotation Parameters: DIM origin not defined

Test Case

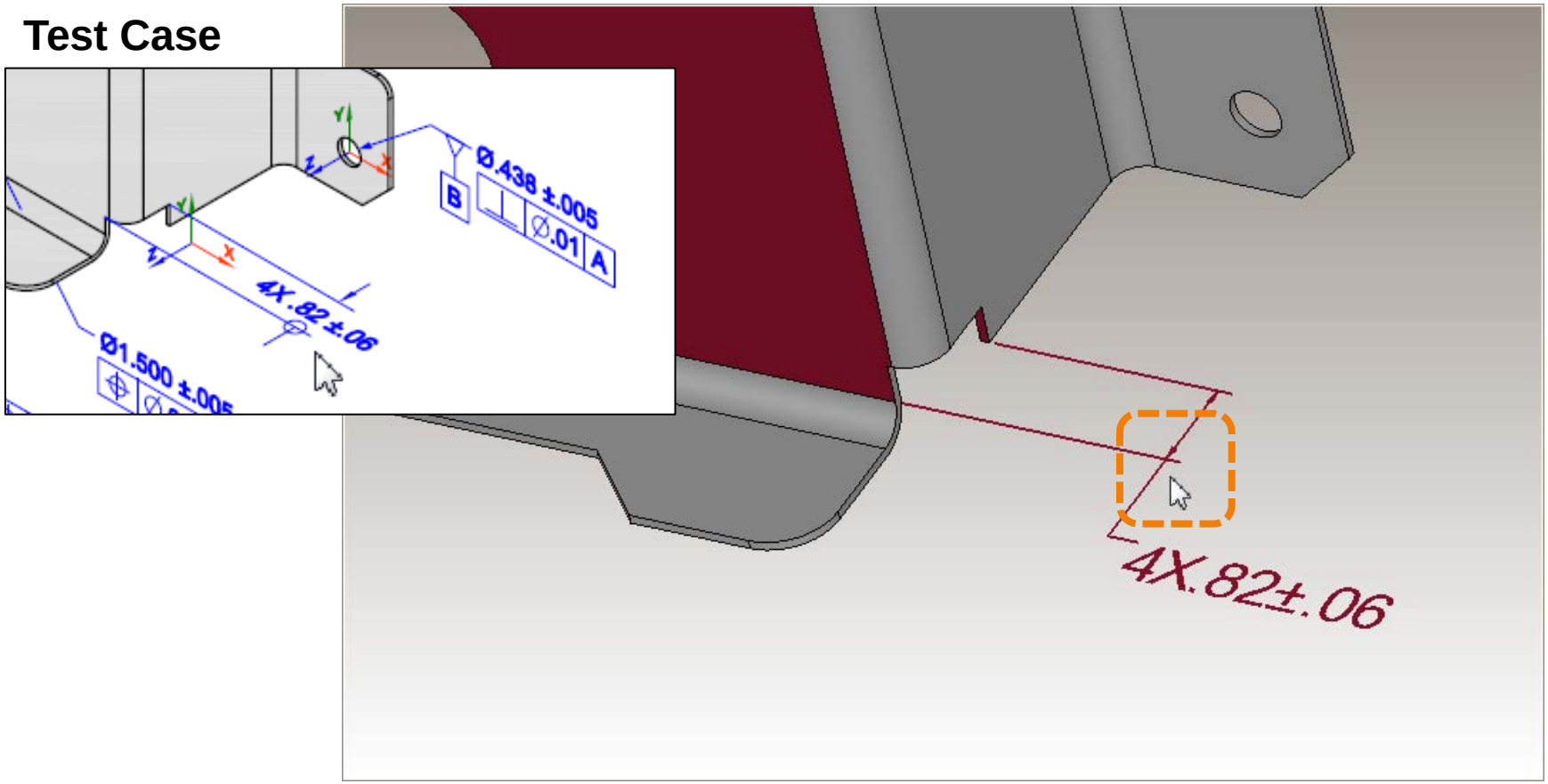

The origin for this oriented dimension is not defined.

Return to Index

TranscenData

Annotation Parameters: DIM parameter defined with encoded text

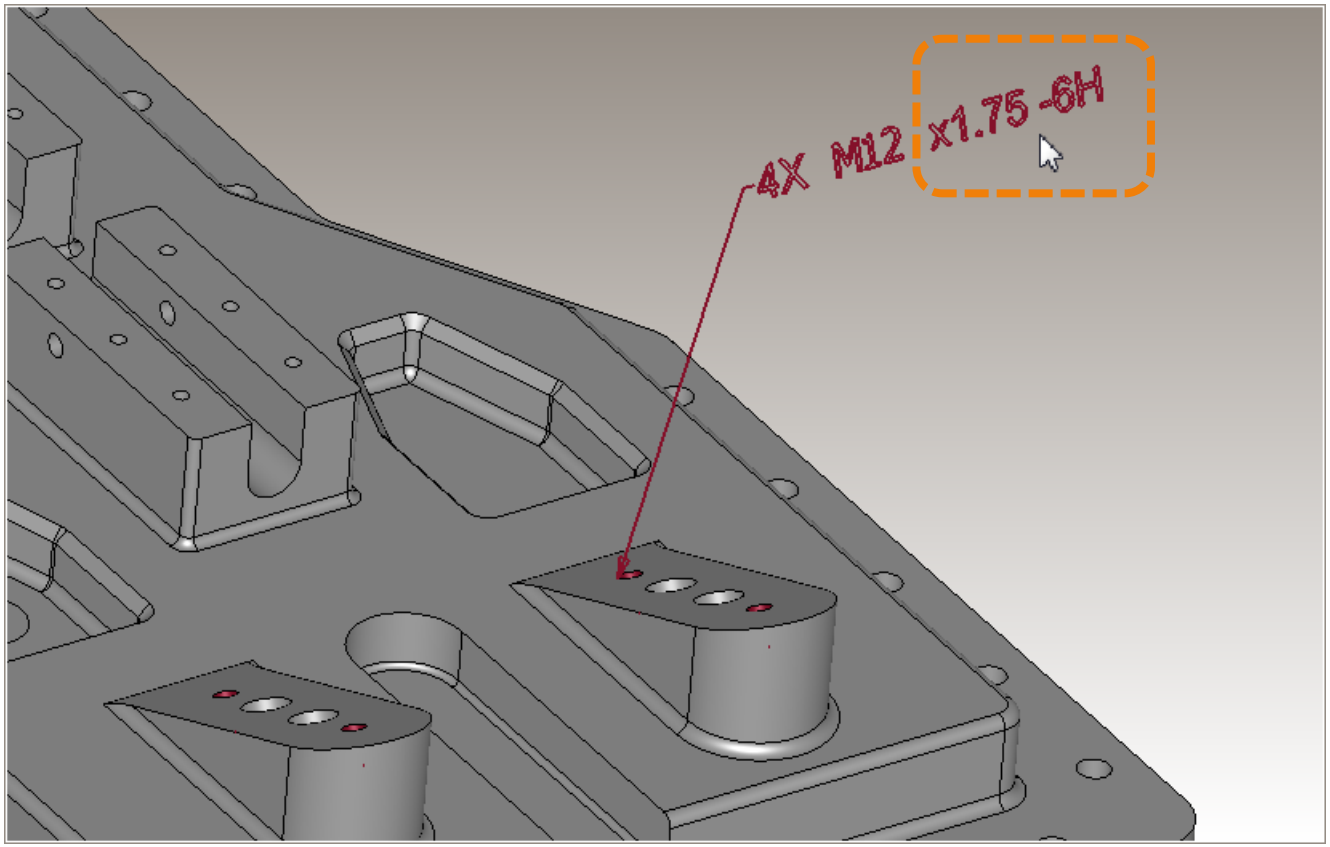

The thread parameters for this threaded hole dimension are defined as encoded text and not as named parameters.

Return to Index

Annotation Parameters: FCF between-basis defined with encoded text

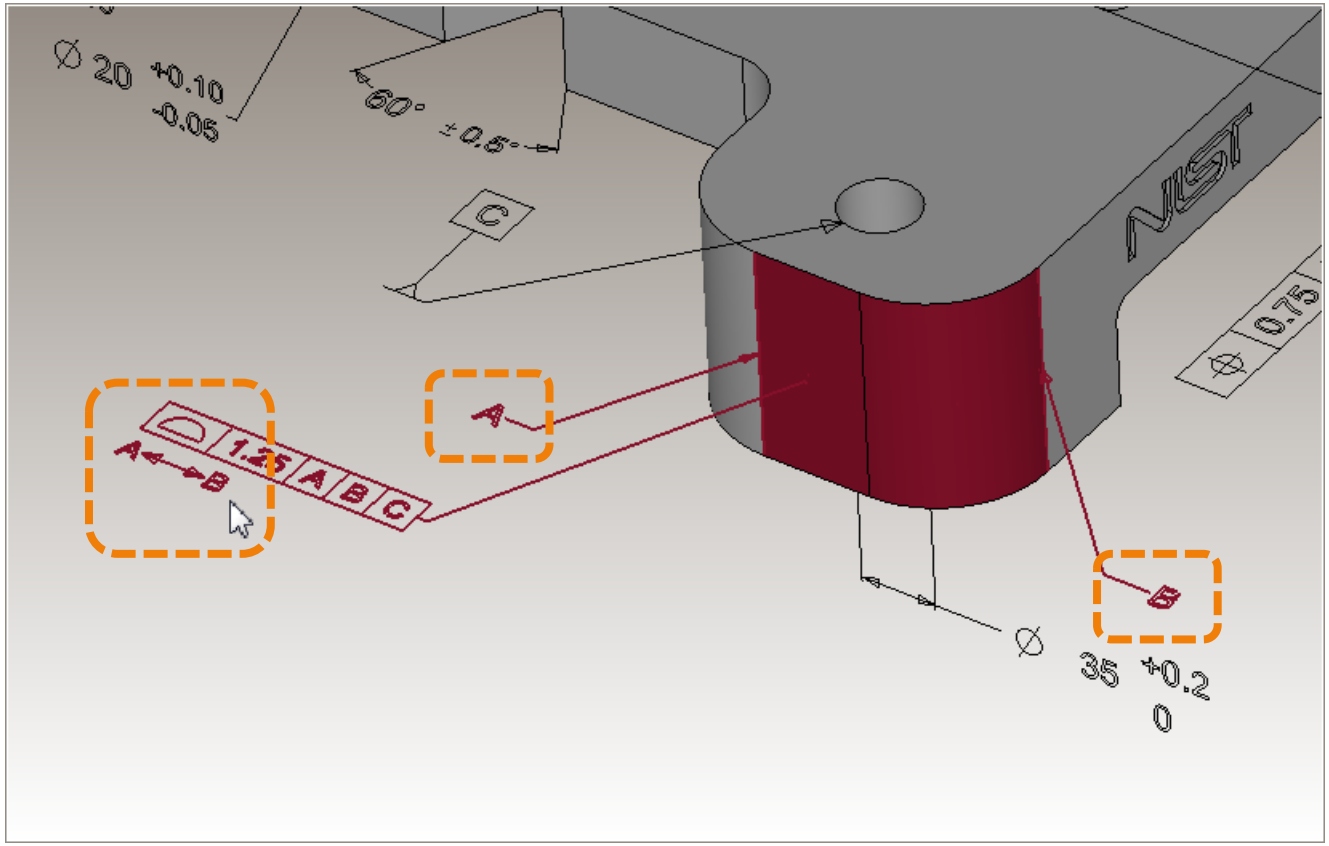

The between-basis for this feature control frame is defined as encoded text and not with named parameters.

Return to Index

Annotation Parameters: FCF parameter defined with encoded text

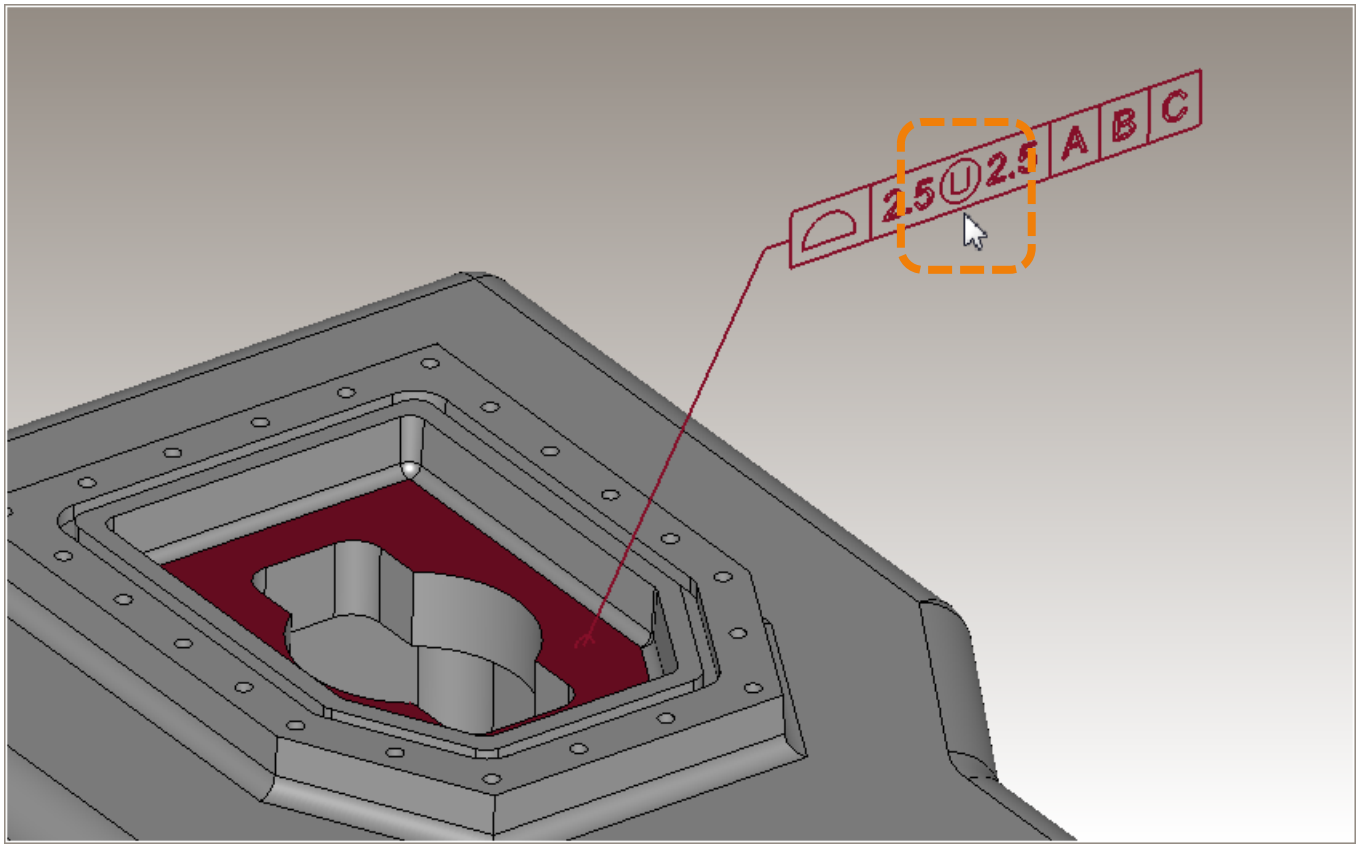

The unequally disposed modifier in this feature control frame is defined as a text symbol and not as a named parameter.

Return to Index

CAD System Representation Limitations for Annotation Geometry

Return to Index

Annotation Geometry: DIM associated with extra face

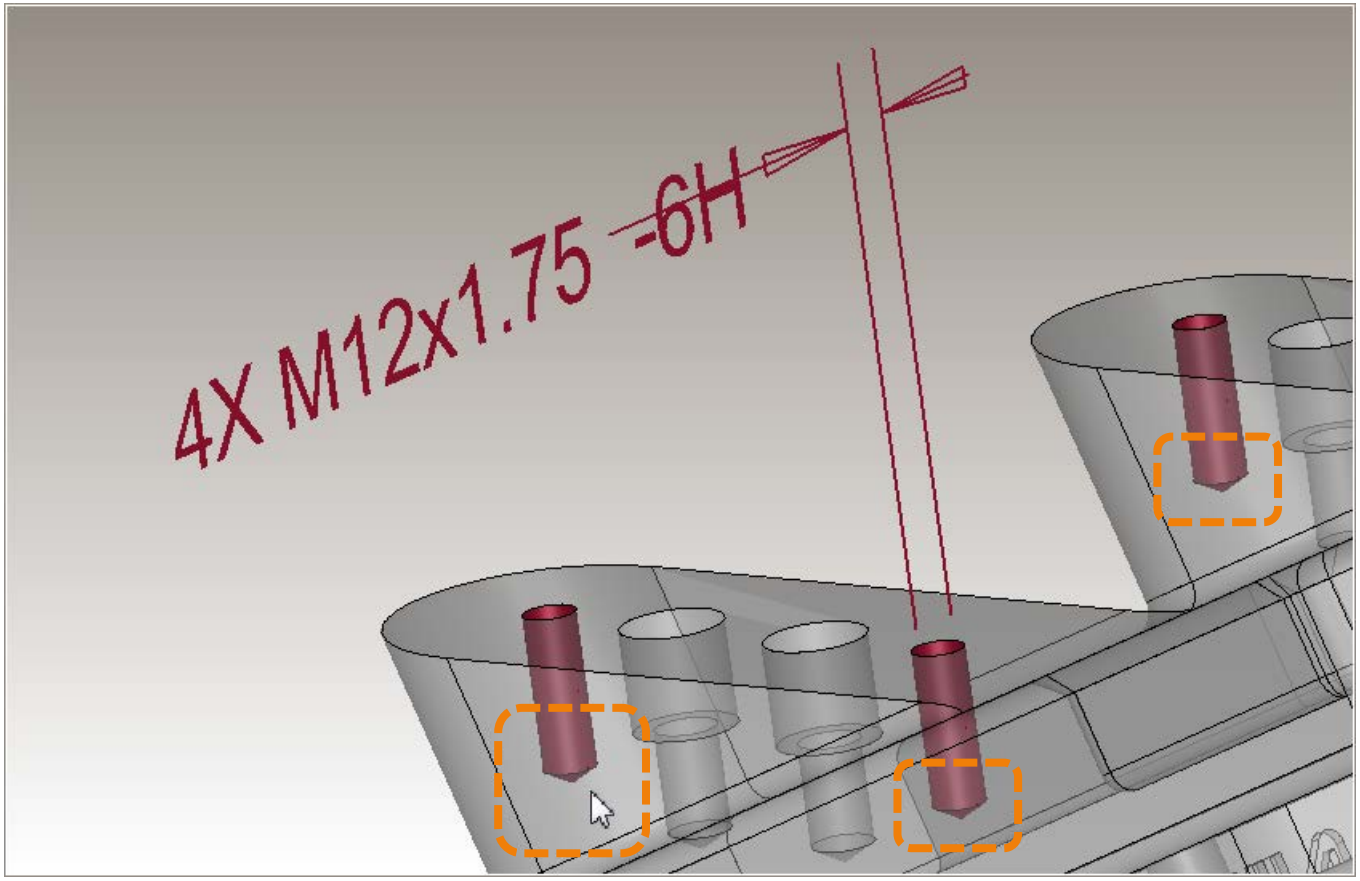

This hole diameter dimension is associated with the bottom face of each hole and not just the side faces.

Return to Index

Annotation Geometry: DIM not associated with complete set of faces

Complete Representation

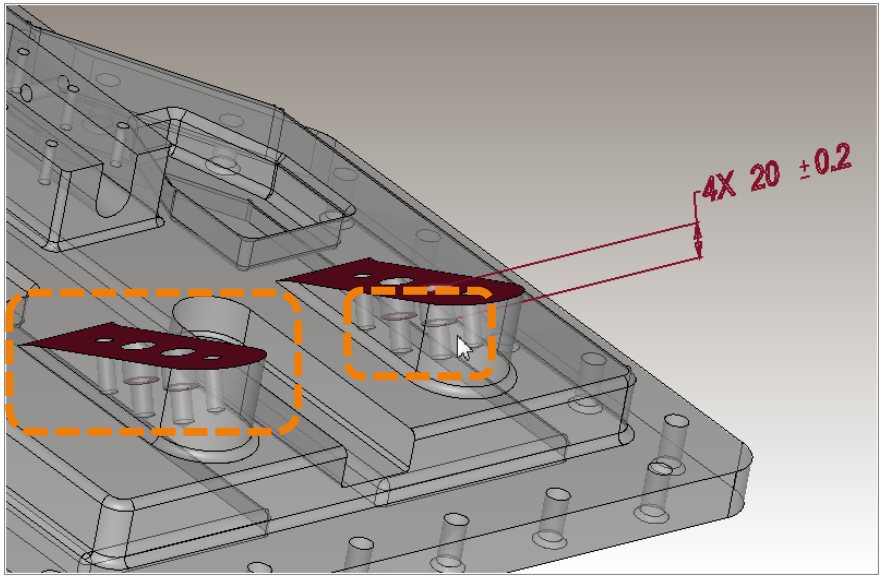

Incomplete Representation

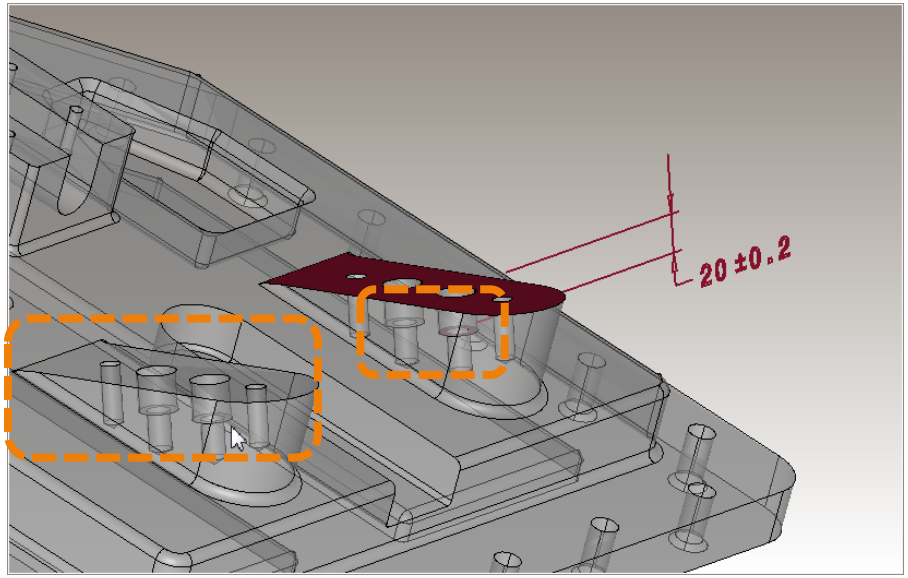

This counterbore depth dimension is not associated with both planar faces and all 4 bottom faces.

Return to Index

TranscenData

Annotation Geometry: DTS associated with extra face

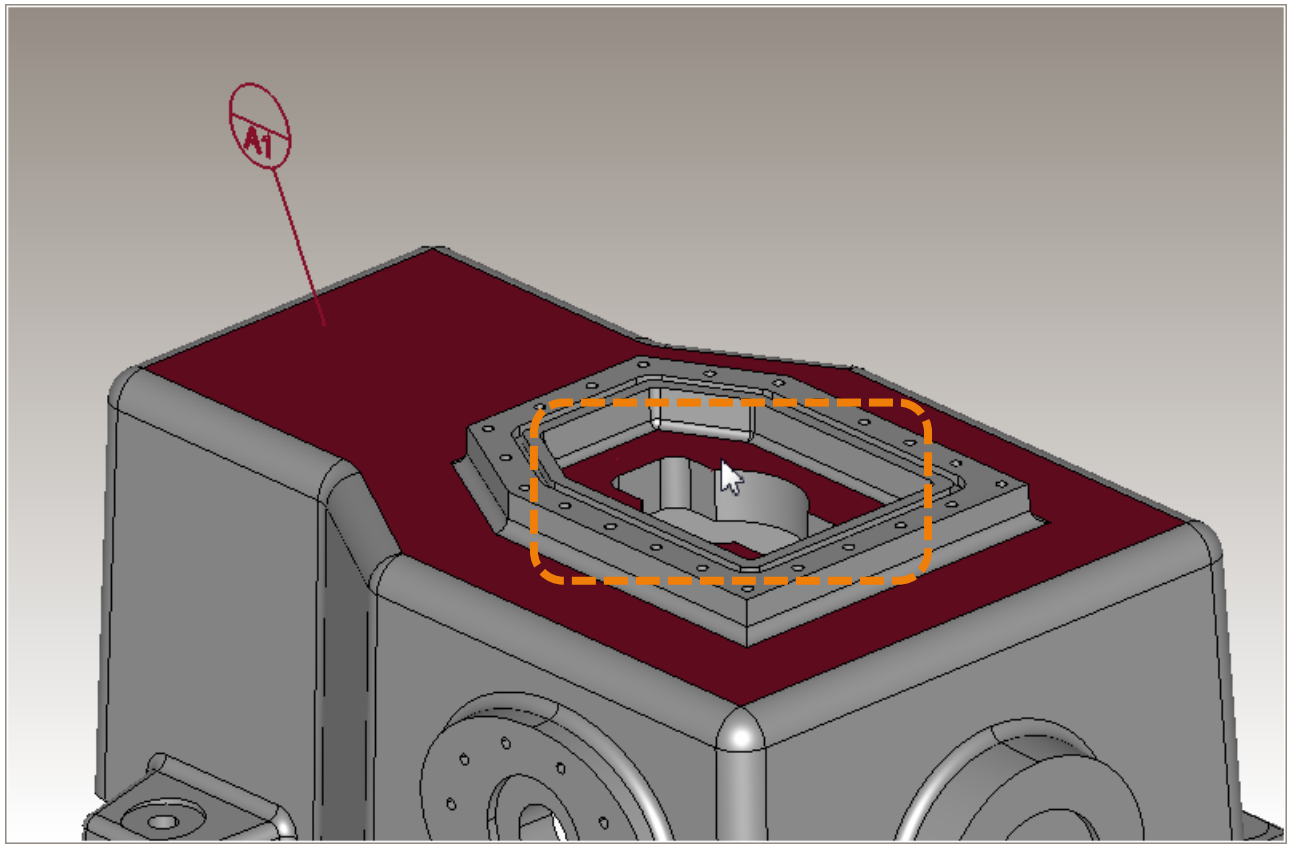

This datum target symbol is associated with an extra (coplanar) face and not just the specified face.

Return to Index

ITI TranscenData

Annotation Geometry: DTS not associated with face

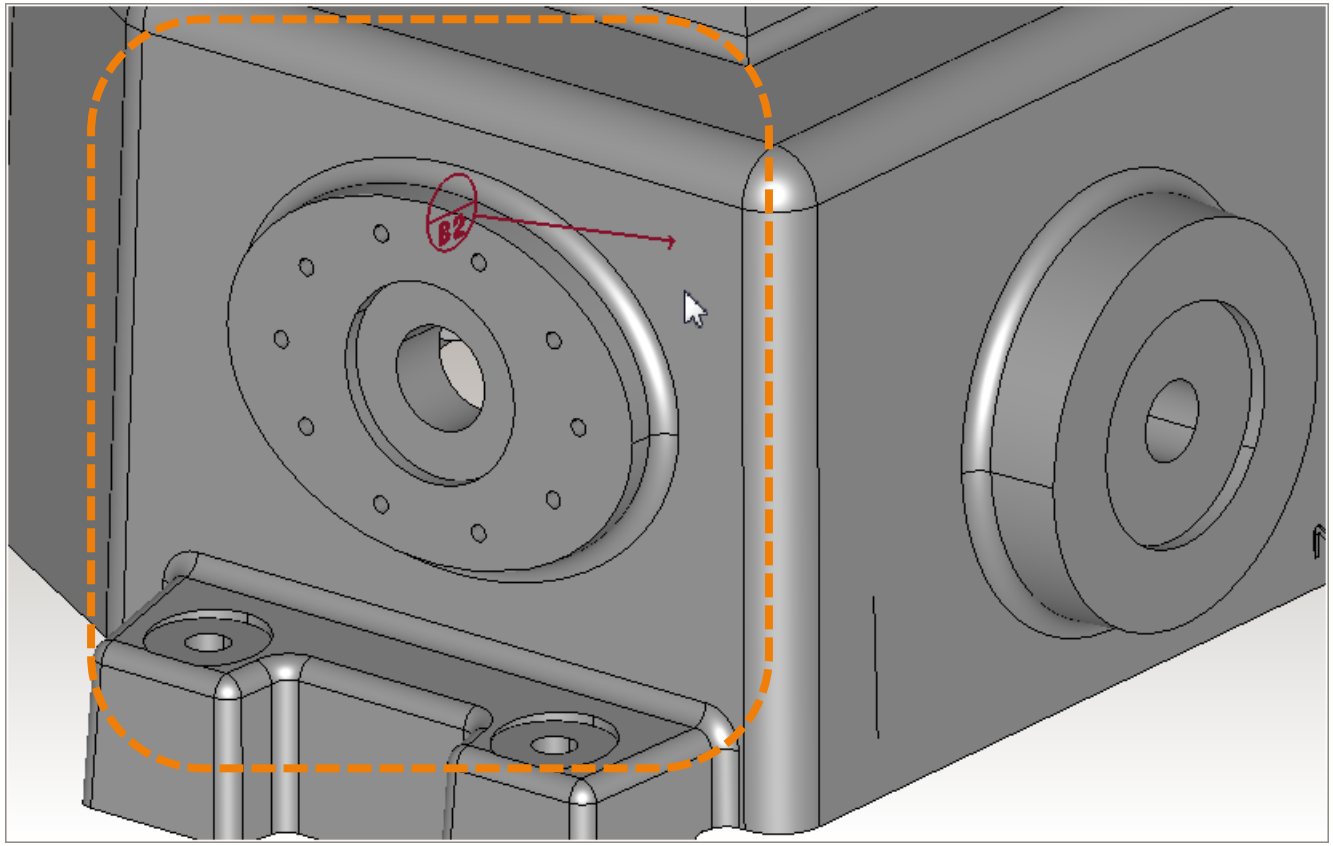

This datum target symbol is not associated with the face on which the datum target is located.

Return to Index

TranscenData

Annotation Geometry: DTS not associated with SG point

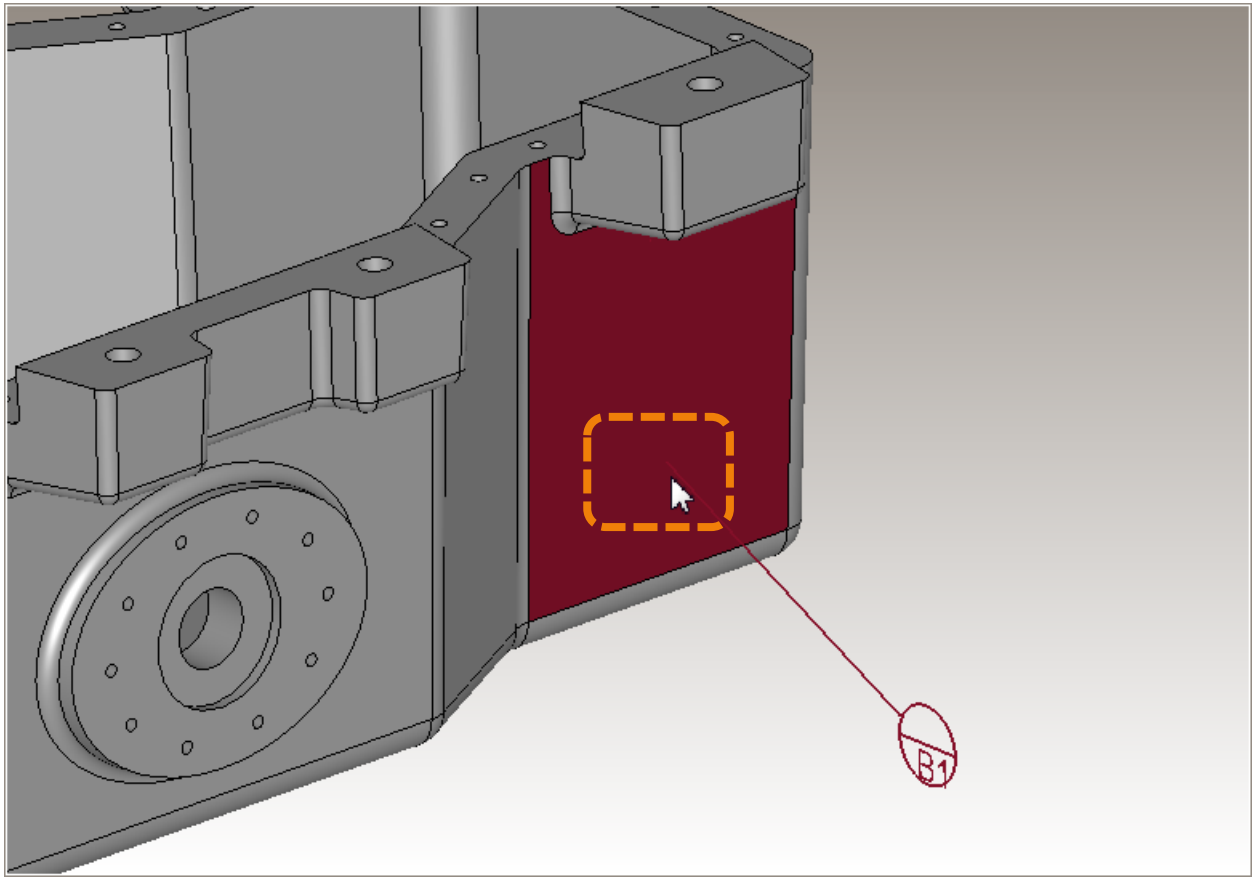

This datum target symbol is not associated with the supplemental geometry point that defines its location on the face.

Return to Index

TranscenData

Annotation Geometry: FCF associated with extra face

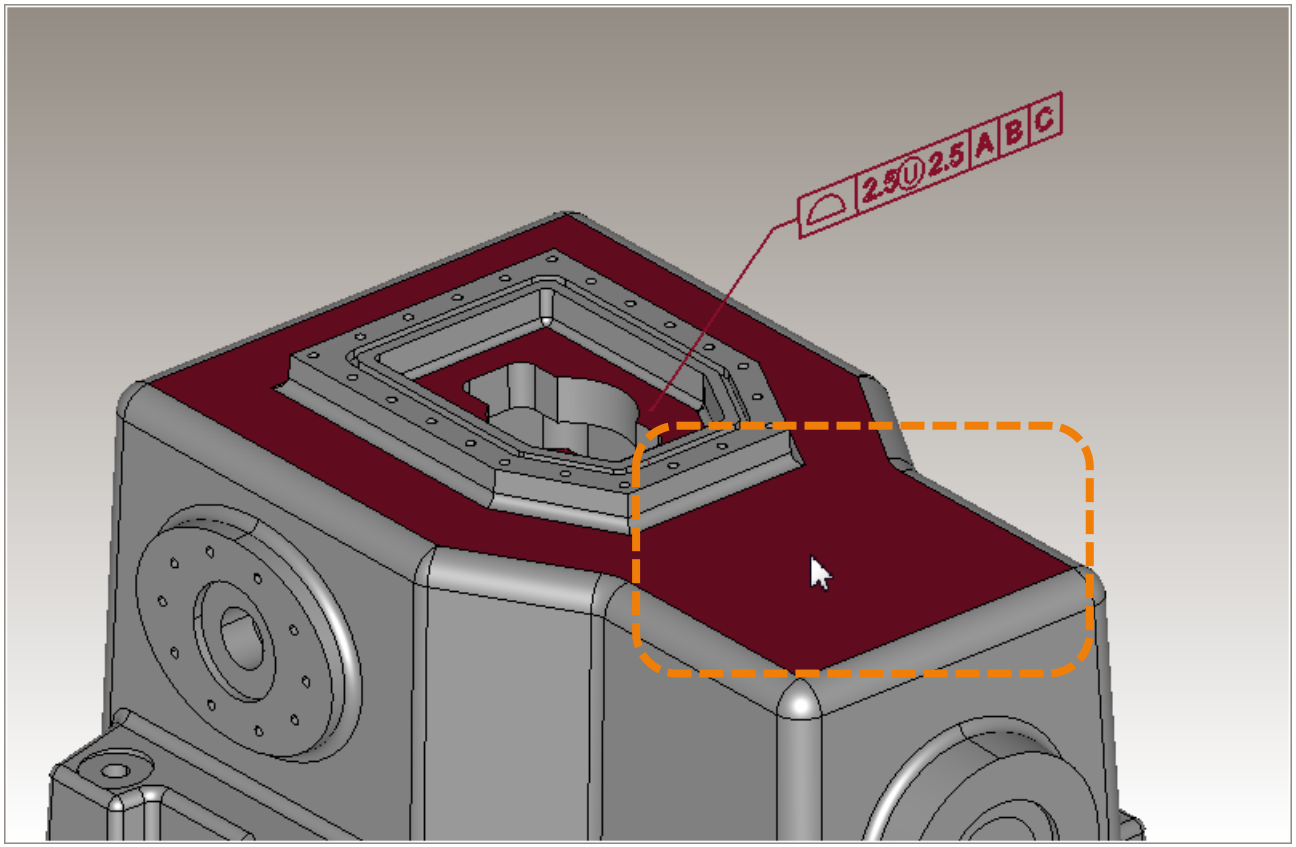

This feature control frame is associated with an extra (coplanar) face and not just the specified face.

Return to Index

Annotation Geometry: FCF not associated with SG curve

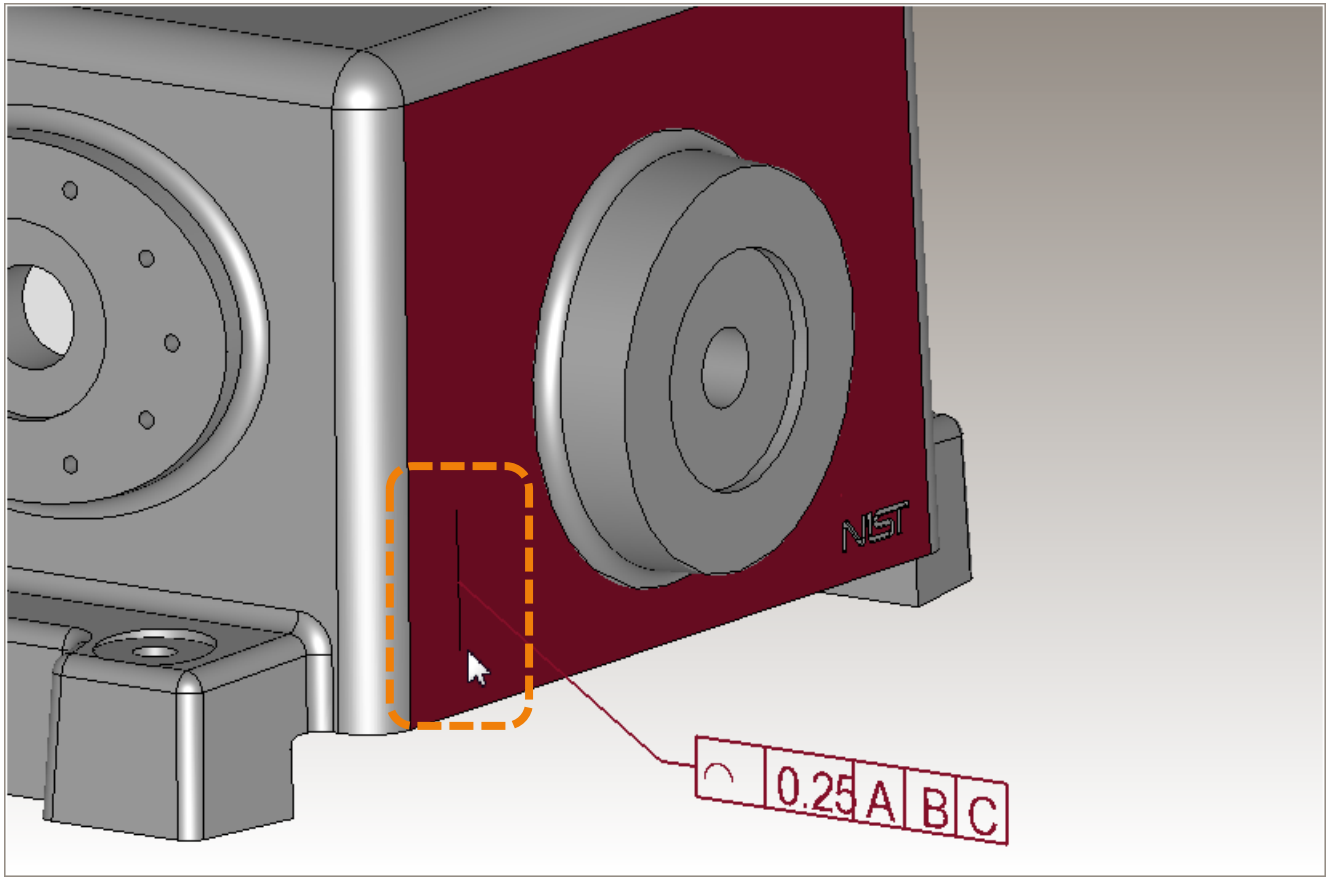

This feature control frame is not associated with the supplemental geometry curve that defines its profile direction on this face.

Return to Index

CAD System Representation Limitations for Coordinate System Structure

Return to Index

Coordinate System Structure: CS not linked to FCF DRF

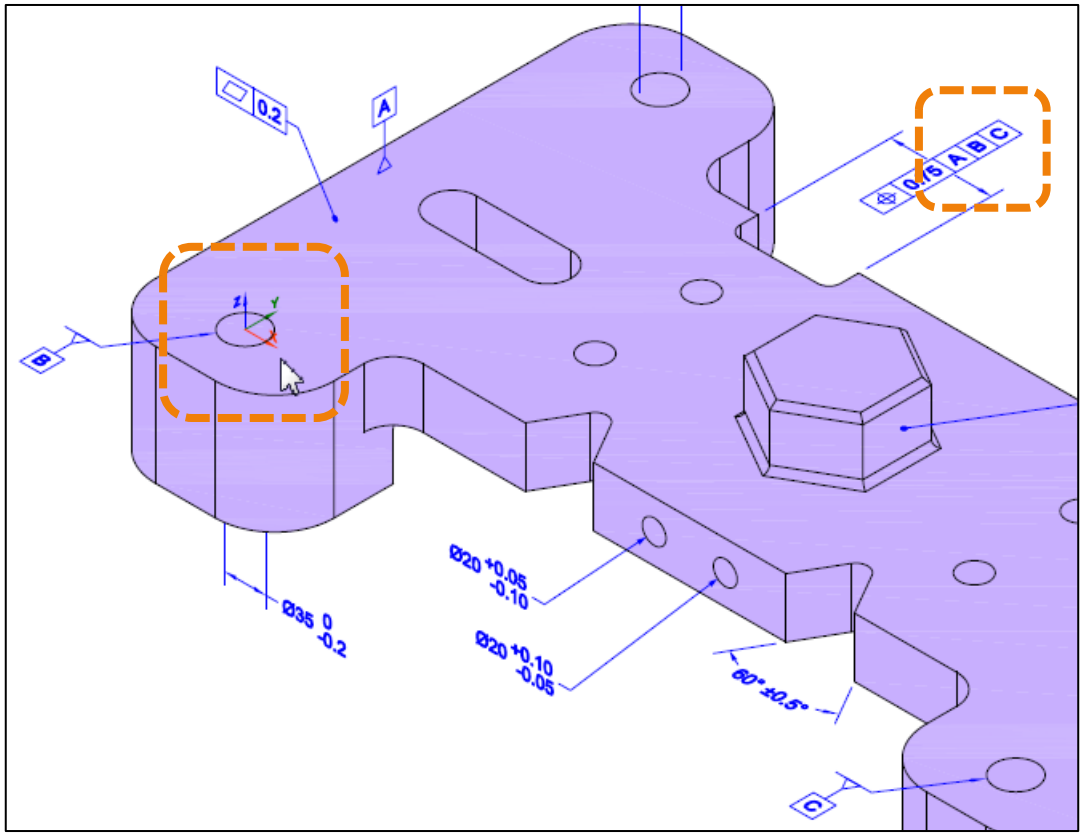

The model has no explicit (named) link from each feature control frame to the coordinate system that represents its datum reference frame.

Return to Index

ITI TranscenData

CAD System Style Differences for Annotation Structure

Return to Index

Annotation Structure:
DTS requires DFS to be defined

Style Difference

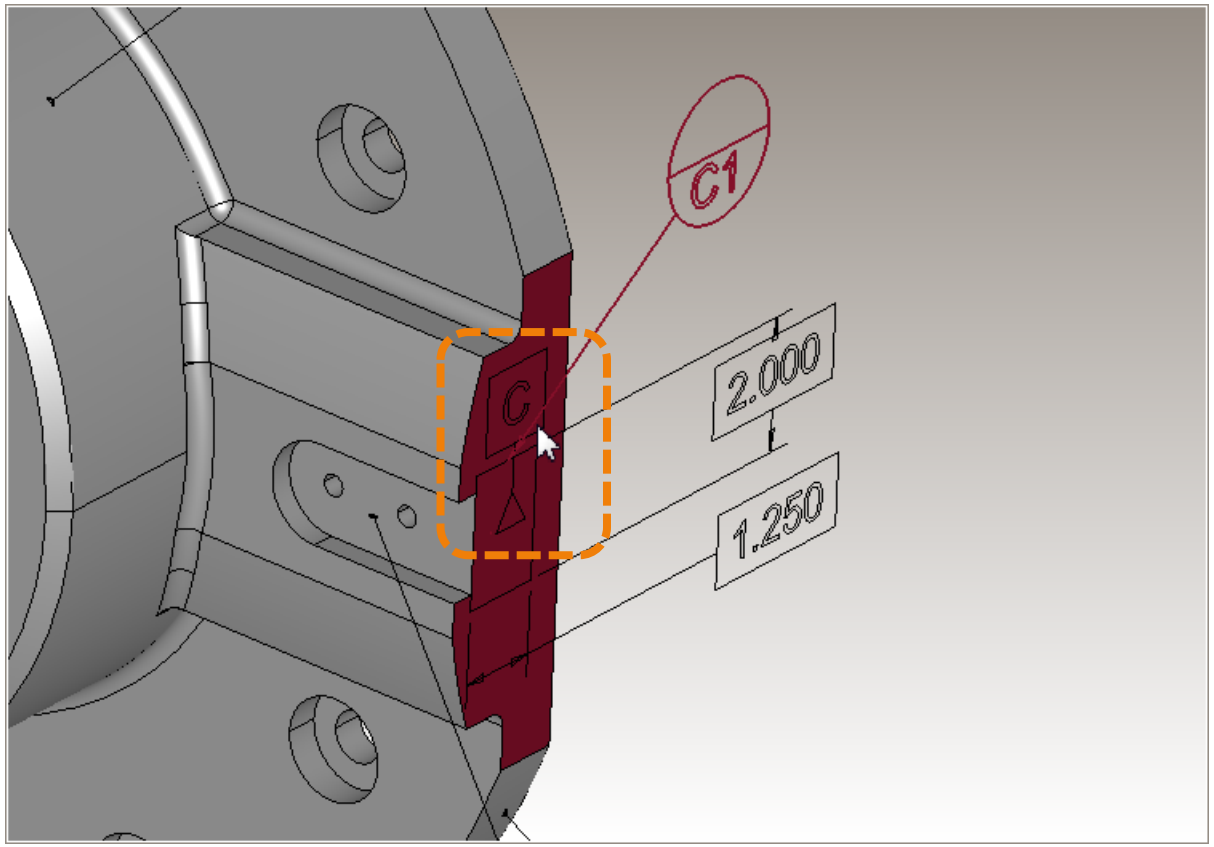

The system requires a datum feature symbol to be defined whenever a datum target symbol is defined.

Return to Index

TranscenData

Annotation Structure: FCF requires DFS to be defined

Style Difference

Test Case

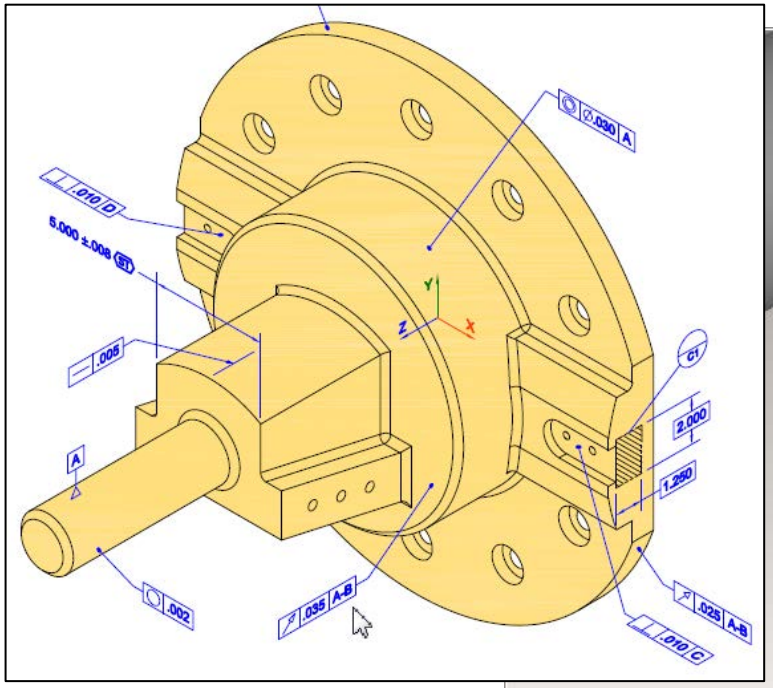

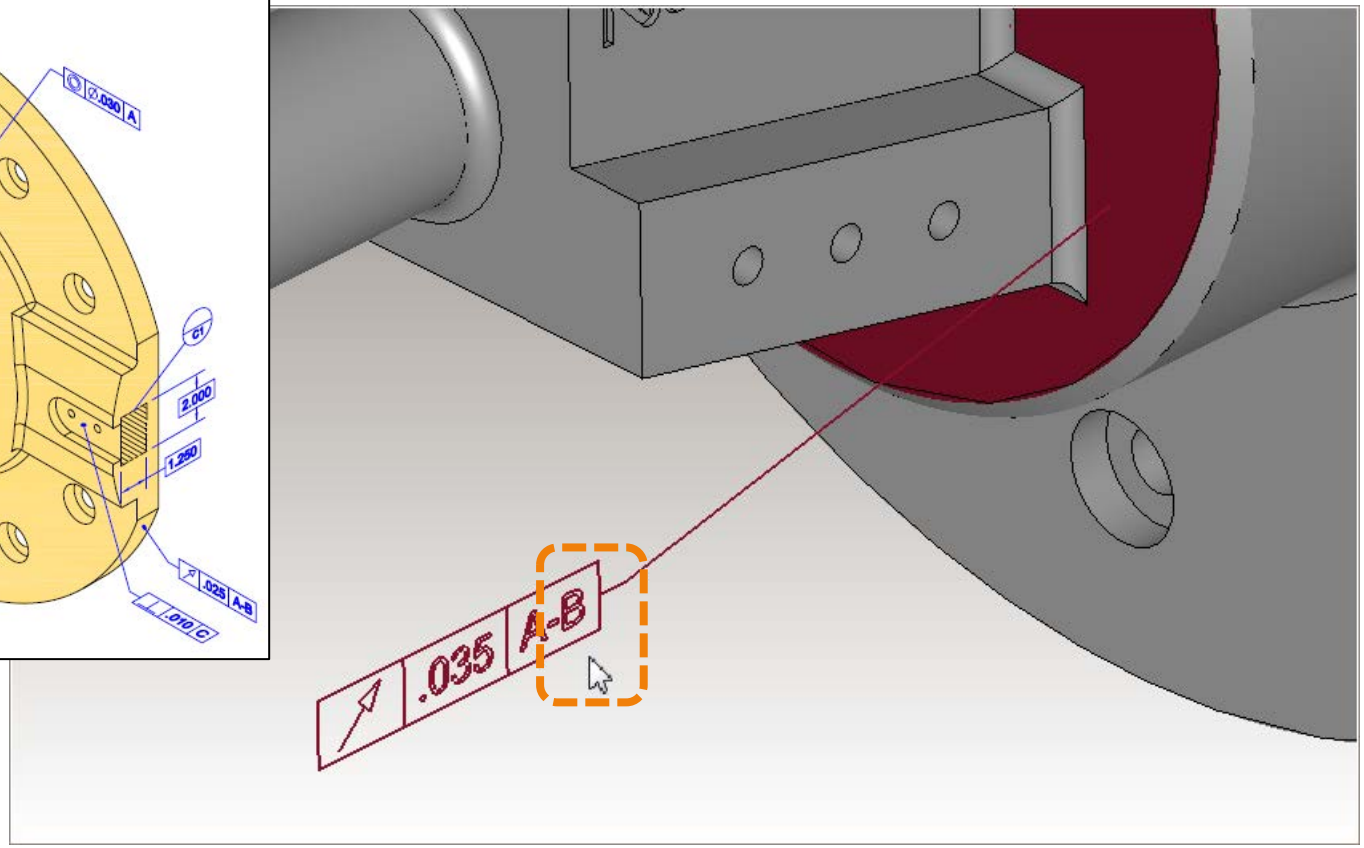

Because this feature control frame references datum “B”, its datum feature symbol must be defined in this saved view, although it can be hidden (not visible).

Return to Index

TranscenData

CAD System Style Differences for Annotation Geometry

Return to Index

ITI TranscenData

Annotation Geometry: DFS edge association is extraneous

Style Difference

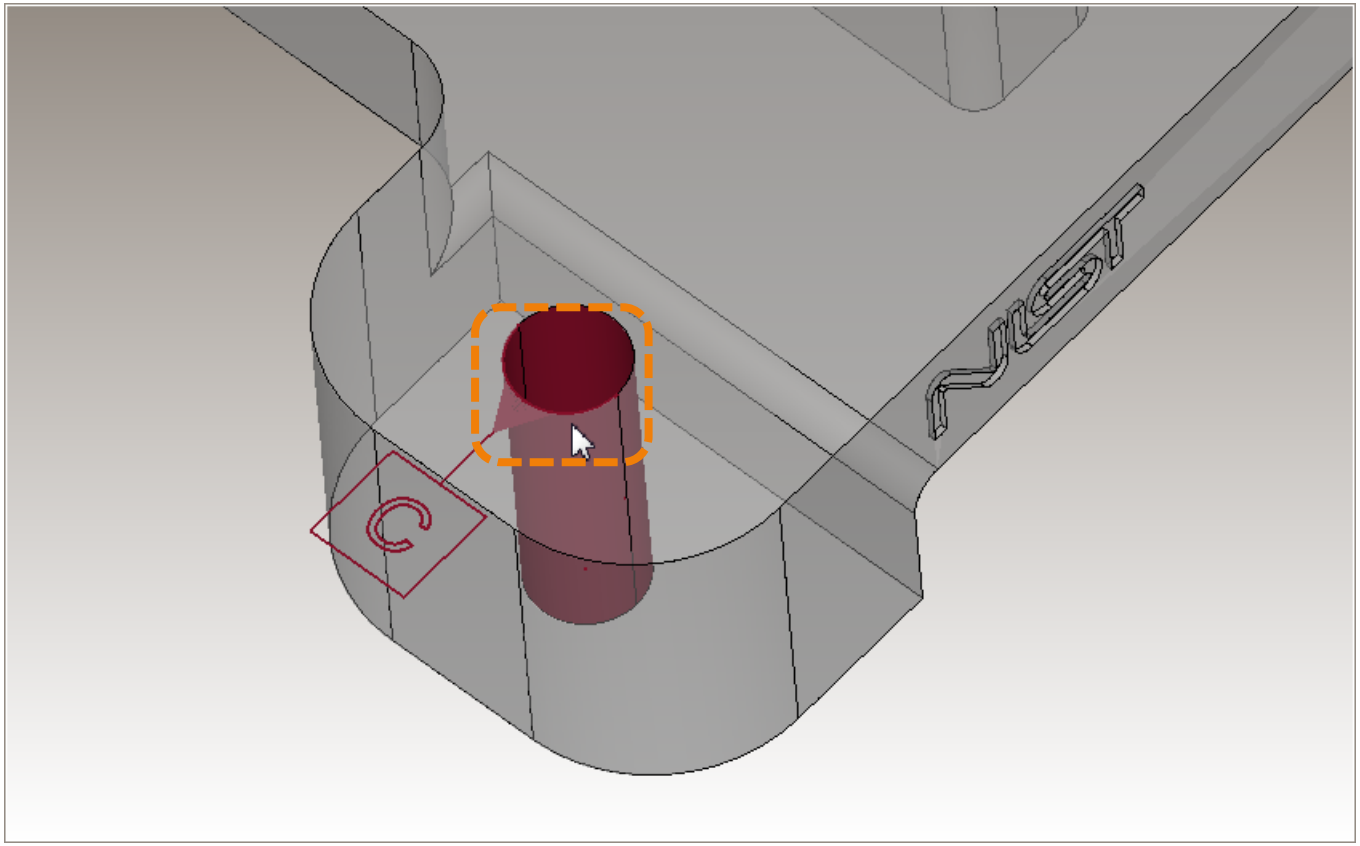

The association of this datum feature symbol with the edge of the hole is used to indicate graphical placement. It is not specified in the test case.

Return to Index

ITI TranscenData

Annotation Geometry:
DIM edge association is extraneous

Style Difference

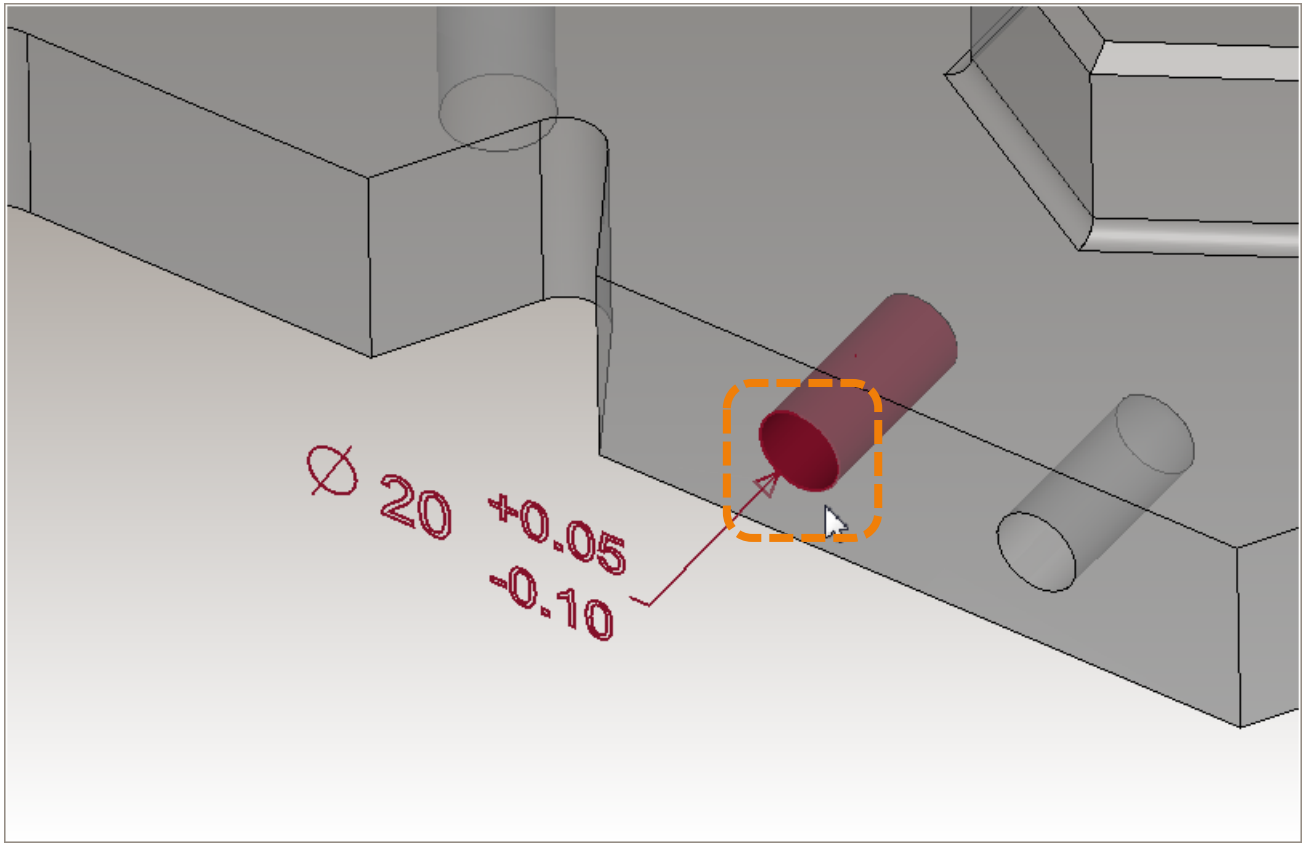

The association of this dimension with the edge of the hole is used to indicate graphical placement.
It is not specified in the test case.

Return to Index

CAD System Style Differences for Supplemental Geometry Structure

Return to Index

Supplemental Geometry Structure: DTS target area is non-solid surface on solid face

Style Difference

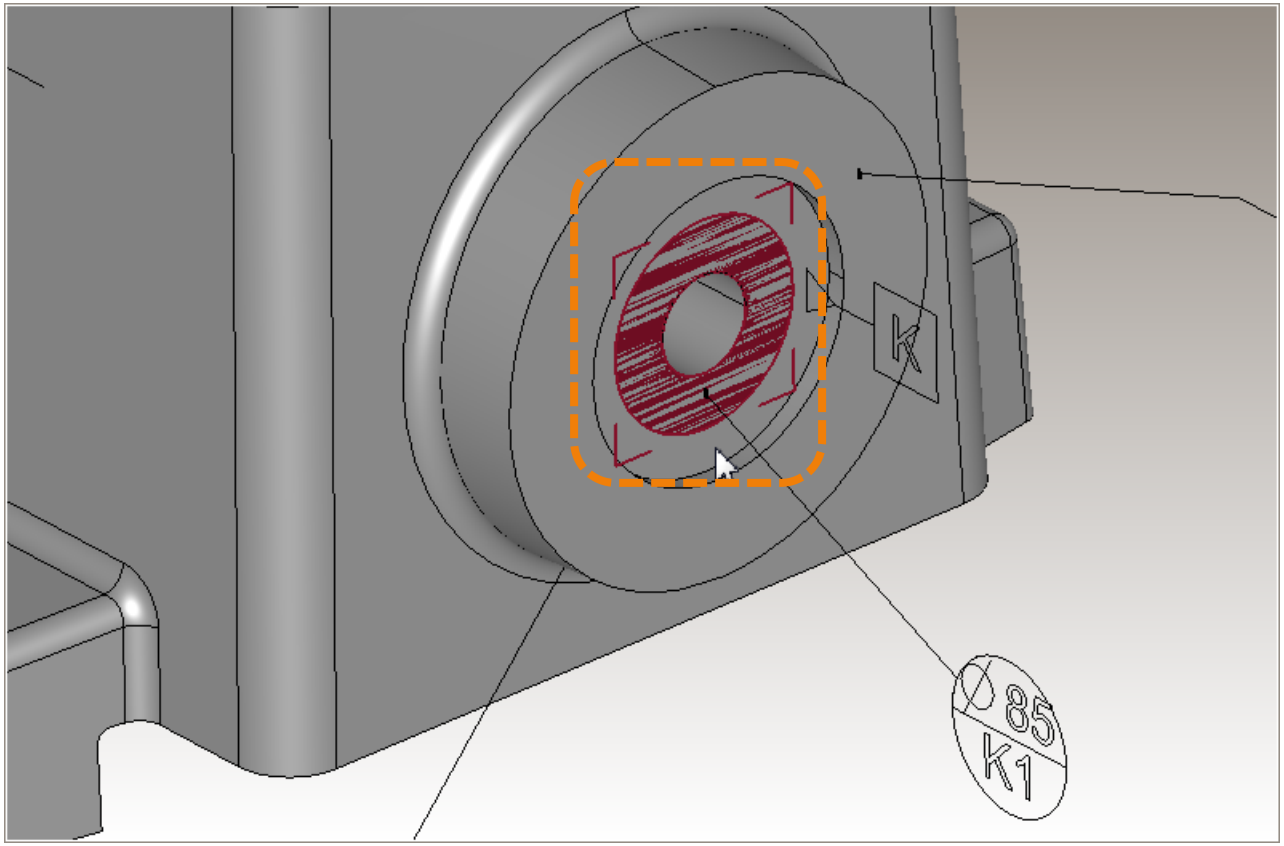

The target area for this datum target is defined as a non-solid surface placed on the solid face.

Return to Index

TranscenData

Supplemental Geometry Structure: DTS target area is subdivided solid face

Style Difference

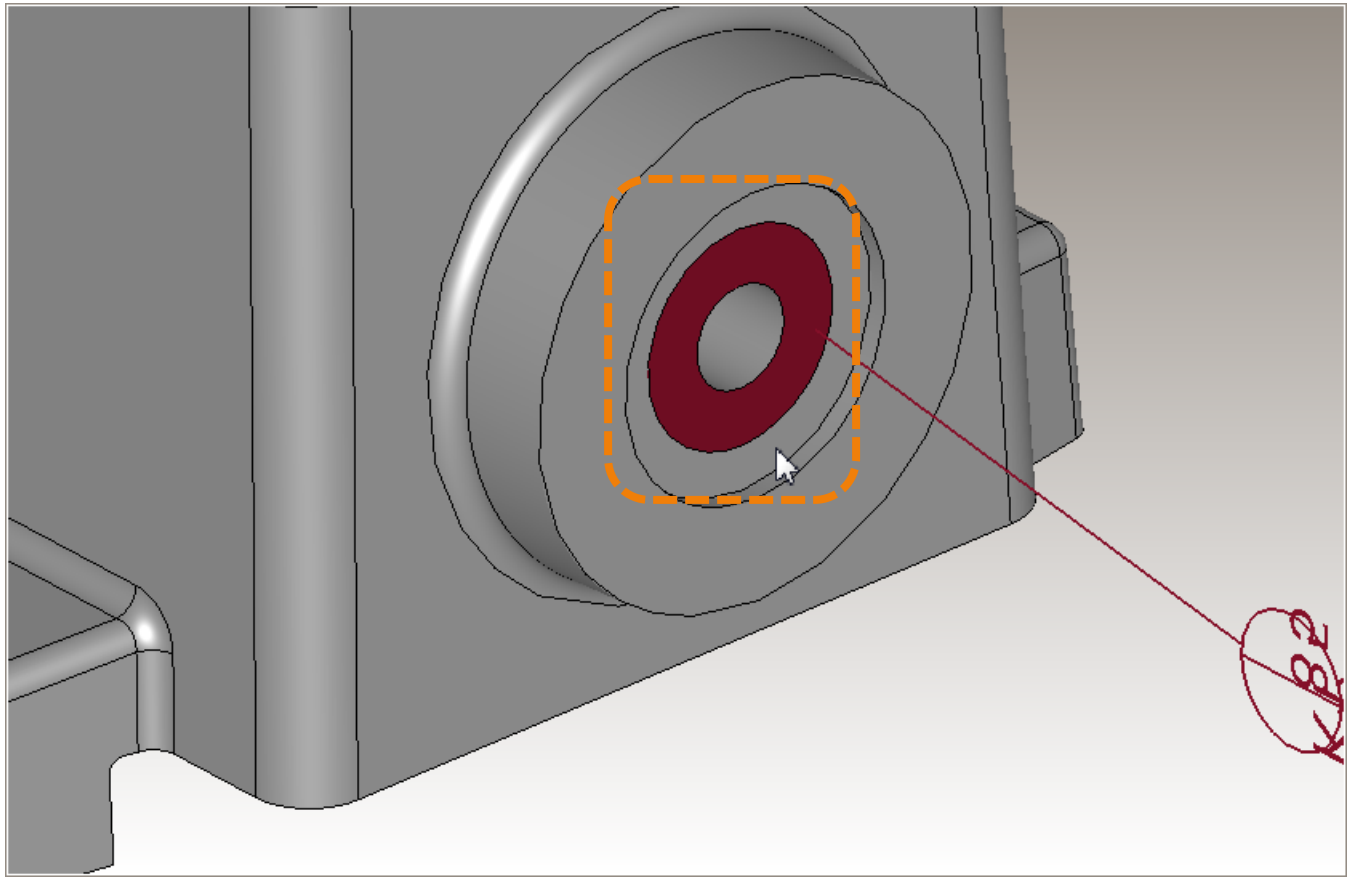

The target area for this datum target is defined as a solid face that has been separated from the adjacent faces in this solid.

Return to Index

ITI TranscenData

Supplemental Geometry Structure: DTS target area is wireframe region on solid face

Style Difference

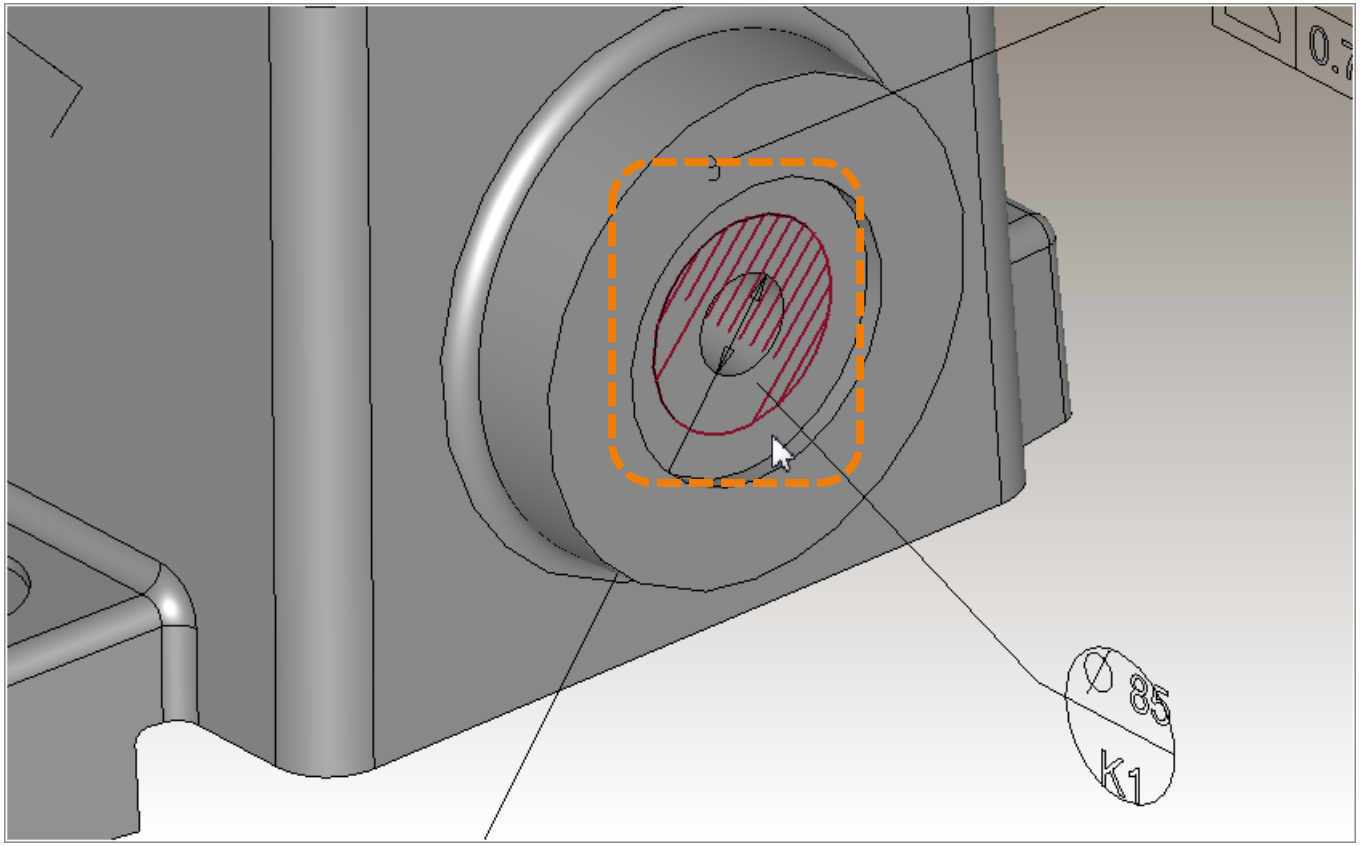

The target area for this datum target is defined as a wireframe region placed on the solid face.

Return to Index

Supplemental Geometry Structure: FCF limited area is non-solid surface on solid face

Style Difference

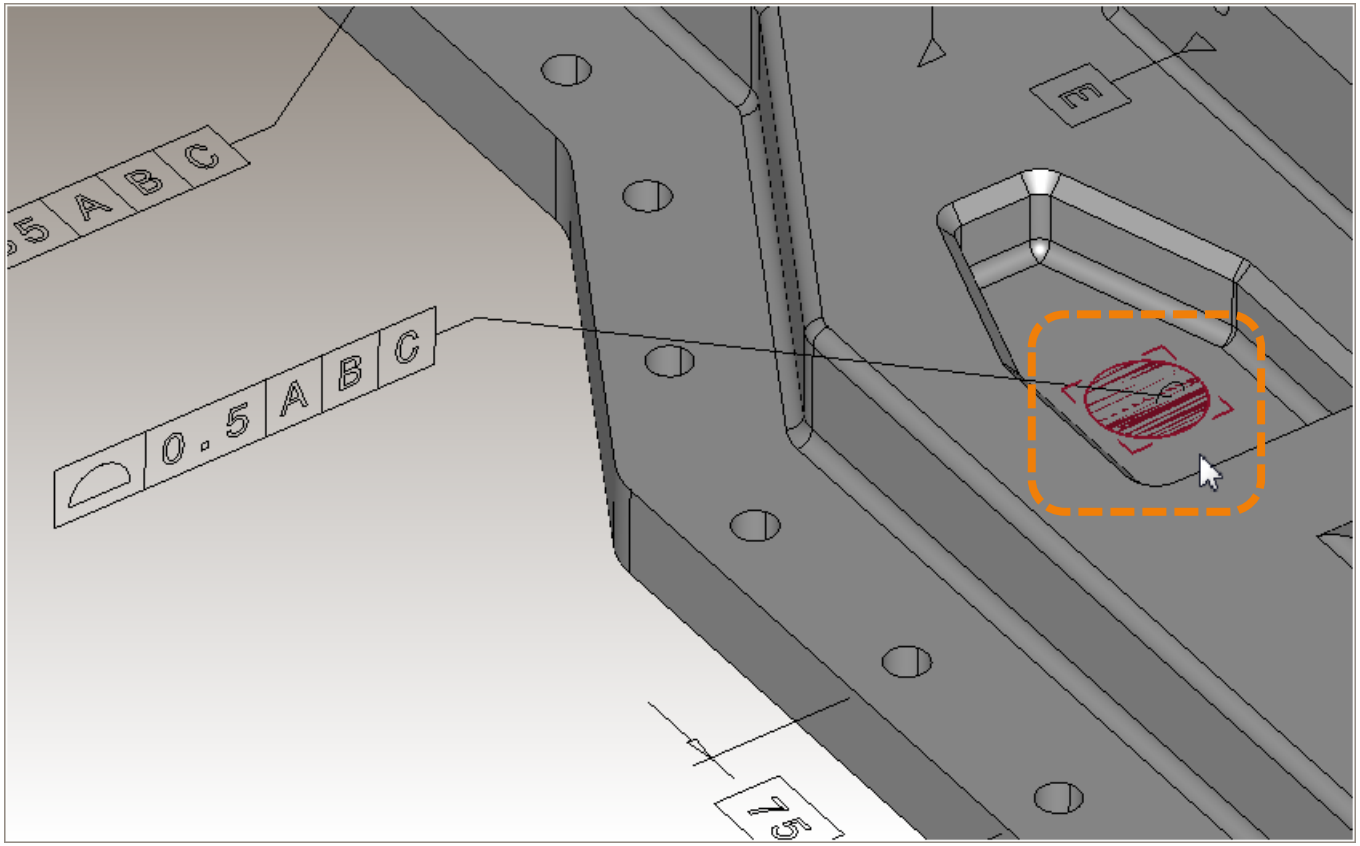

The limited area for this feature control frame is defined as a non-solid surface placed on the solid face.

Return to Index

TranscenData

Supplemental Geometry Structure: FCF limited area is subdivided solid face

Style Difference

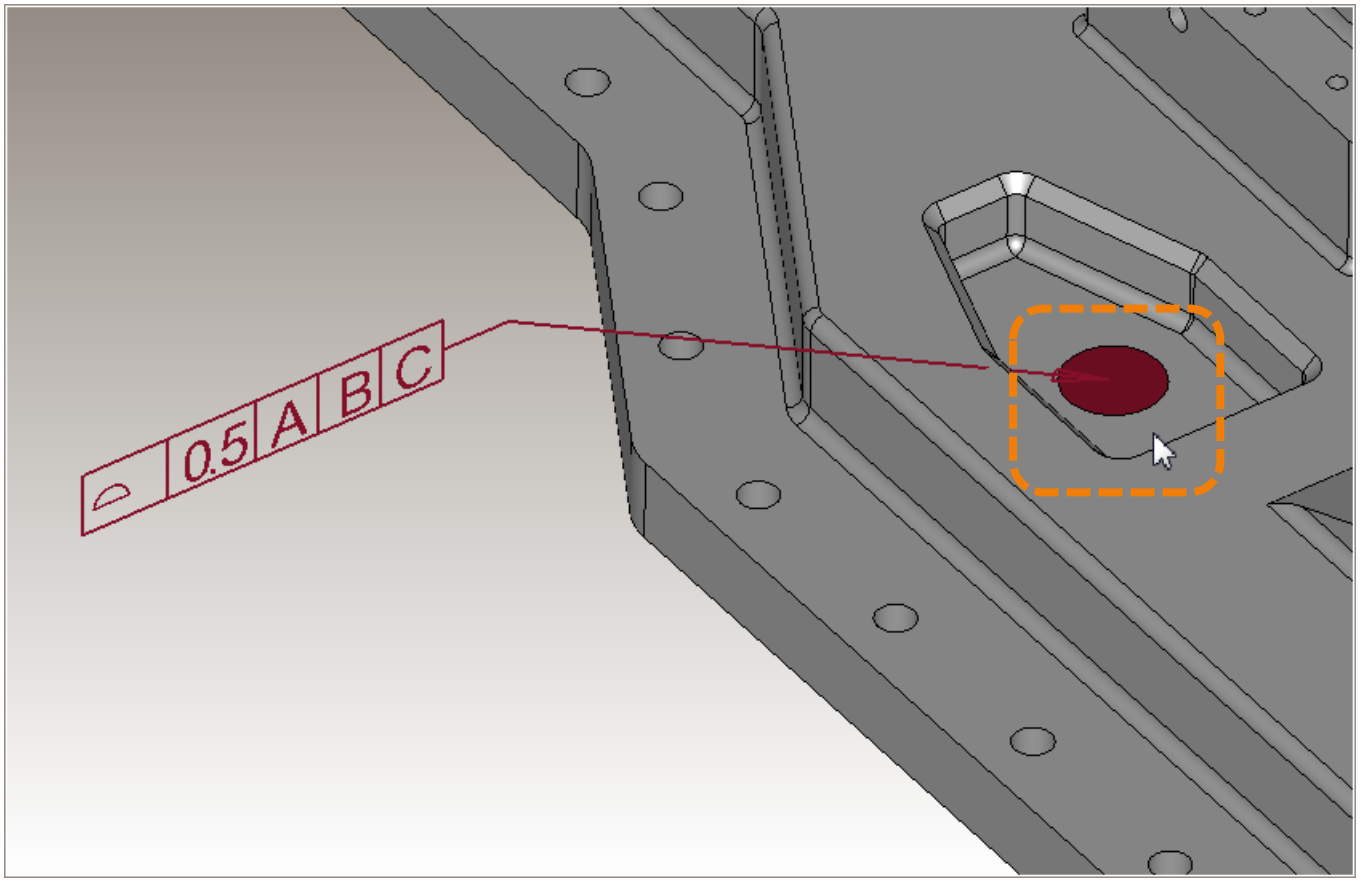

The limited area for this feature control frame is defined as a solid face that has been separated from the adjacent faces in this solid.

Return to Index

TranscenData

Style Difference

Supplemental Geometry Structure: FCF limited area definition inconsistent with target area

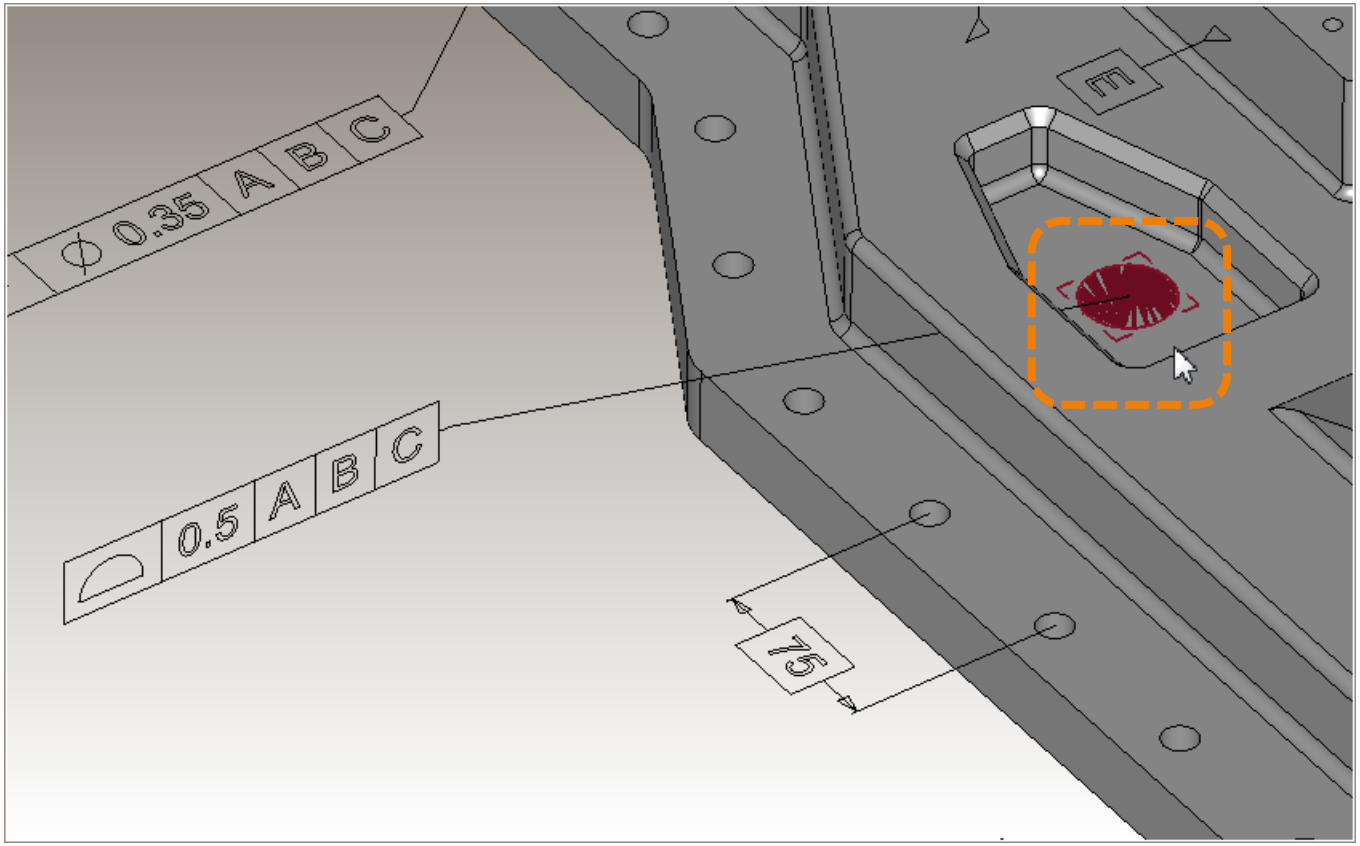

The limited area for this feature control frame is defined as a non-solid surface placed on the solid face. This is inconsistent with the wireframe region used to define datum target areas in this system.

Return to Index

CAD System Style Differences for Product Geometry Parameters

Return to Index

ITI TranscenData

Product Geometry Parameters: Threaded hole diameter different than other systems

Style Difference

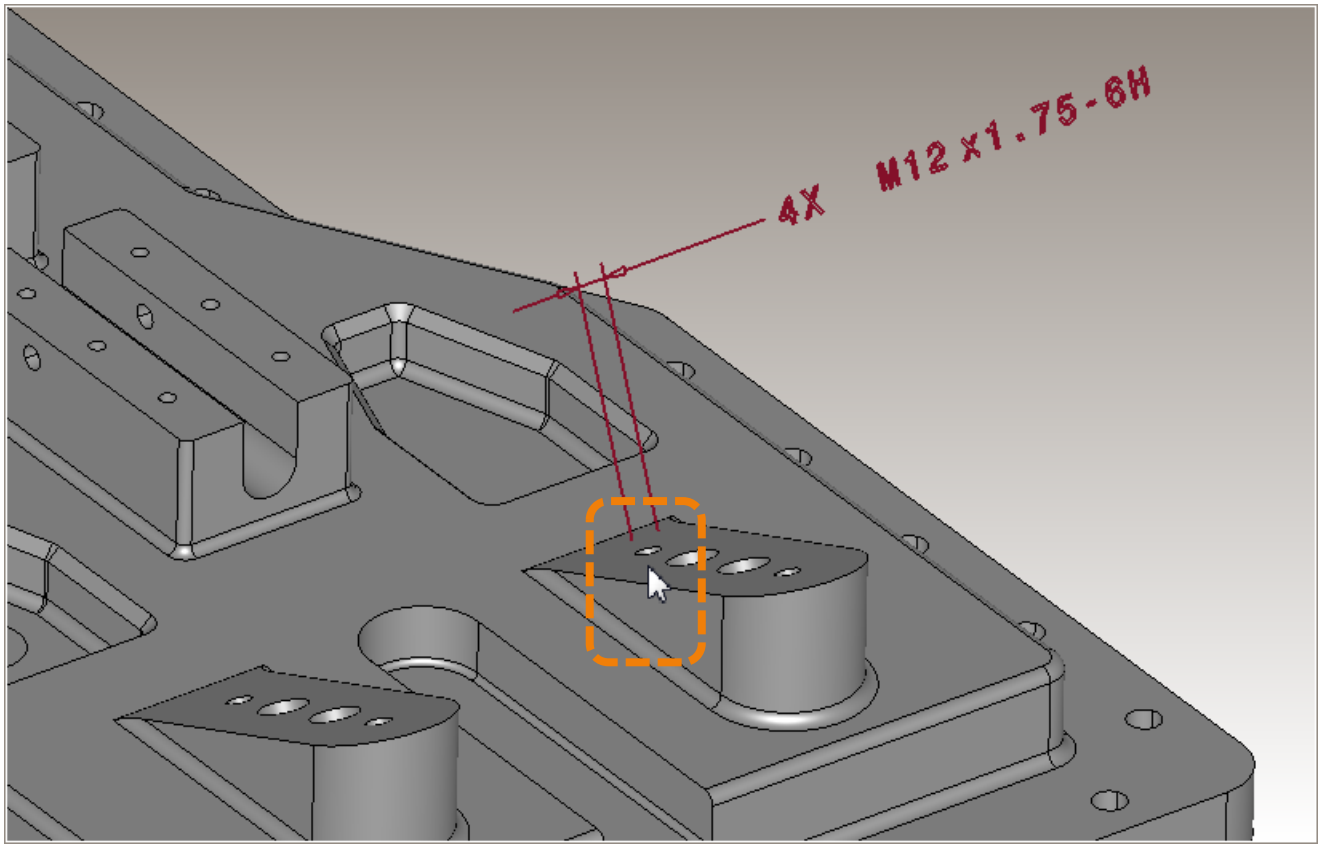

The nominal diameter of the geometric hole associated with this threaded hole diameter dimension is slightly different (by default) than in other systems.

Return to Index

TranscenData

CAD System Presentation Limitations for Annotation Visibility

Return to Index

Annotation Visibility: DFS is extraneous when DTS is defined

Presentation Limitation

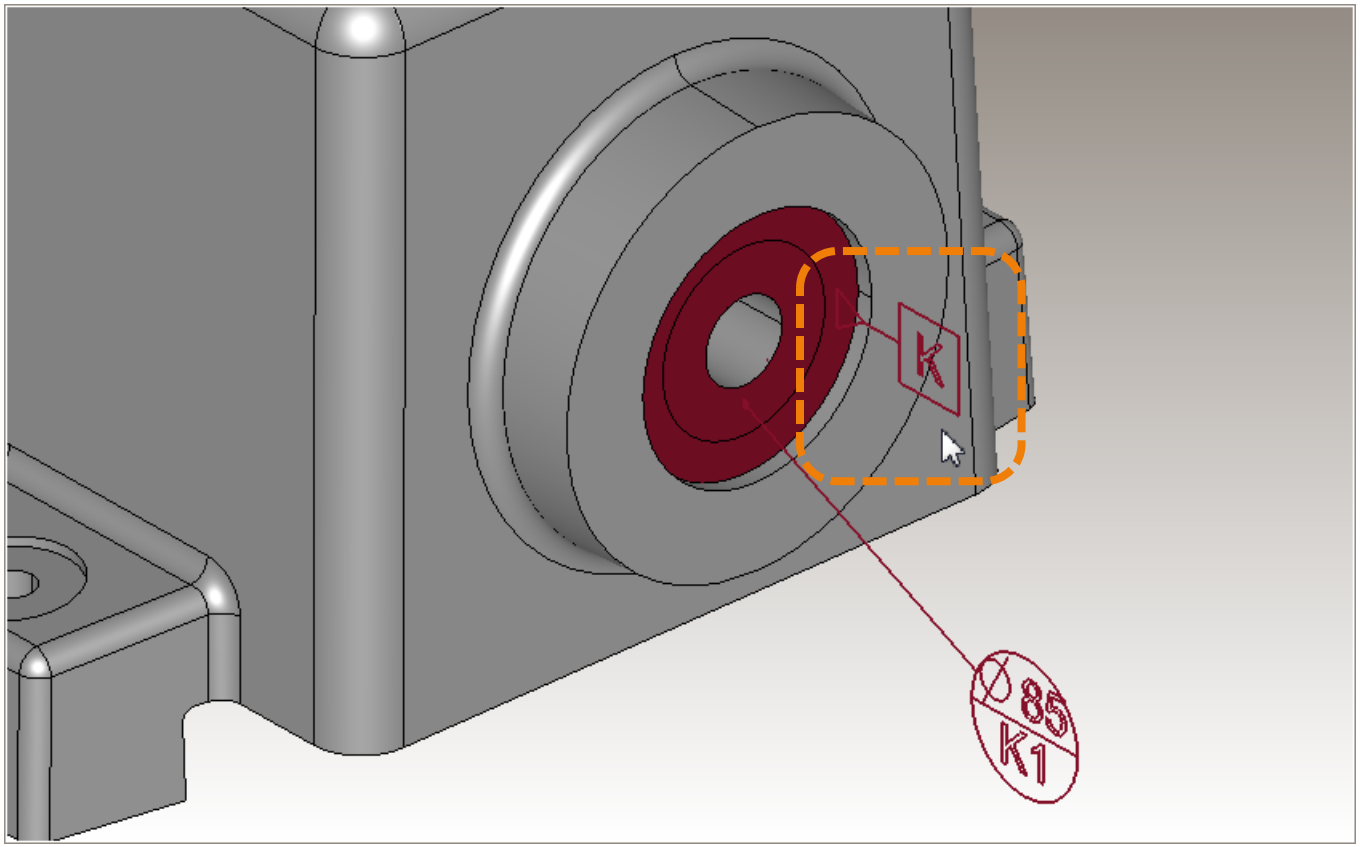

This datum feature symbol is not needed when the datum target symbol is defined. But the system will not allow it to be removed or hidden from this saved view.

Return to Index

TranscenData

Annotation Visibility: DFS not visible in specified view

Presentation Limitation

Test Case

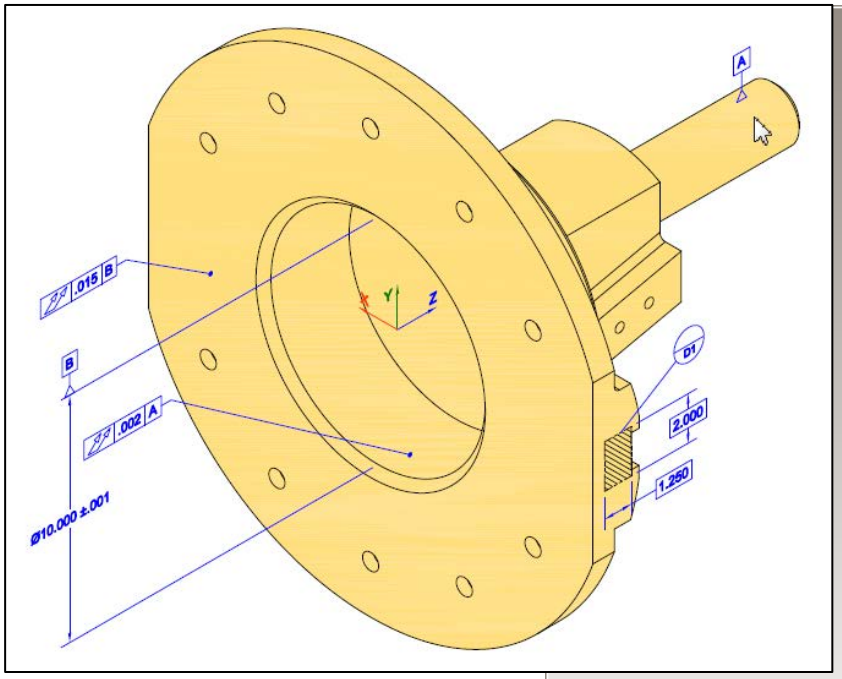

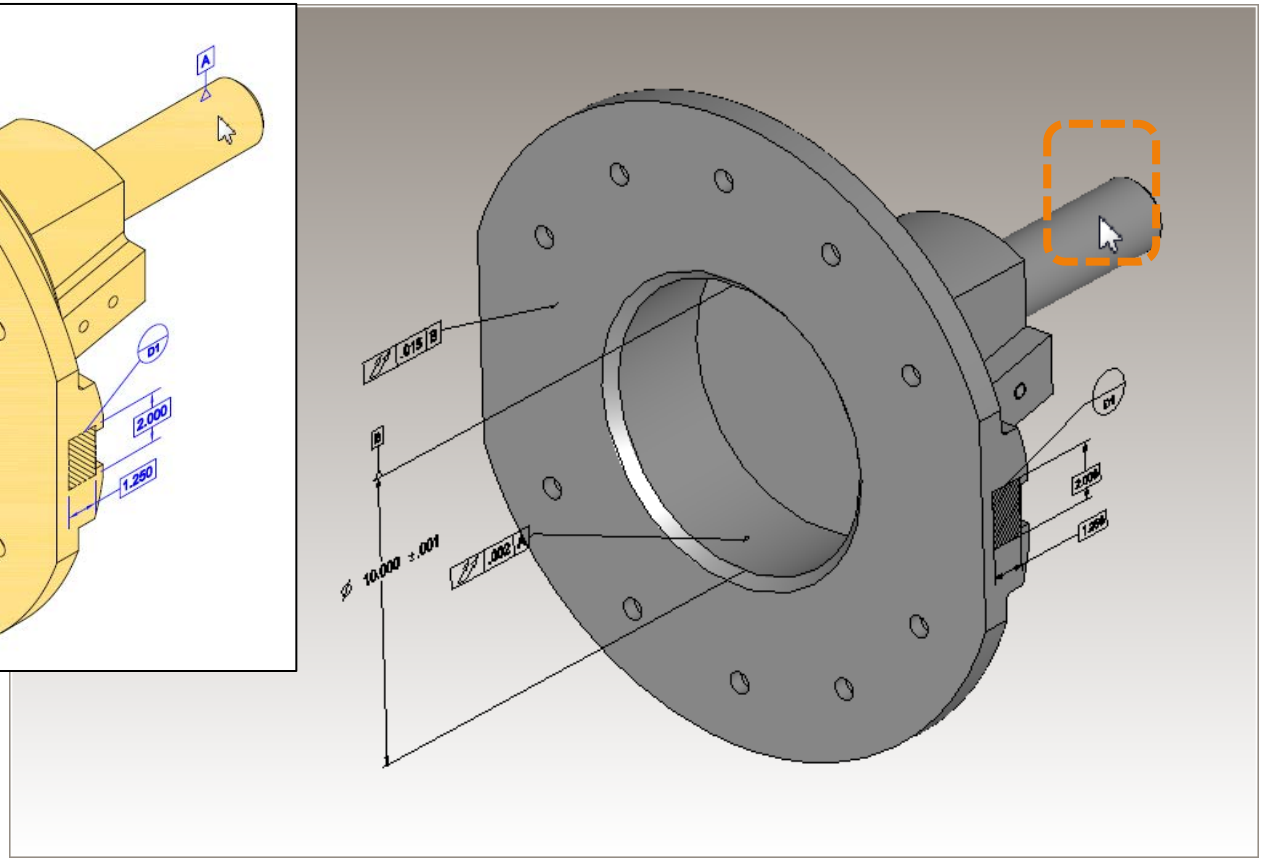

This model has datum feature symbol “A” defined in the first saved view. But it cannot also be displayed in the second saved view as specified.

Return to Index

TranscenData

Annotation Visibility: DIM not visible in specified view

Presentation Limitation

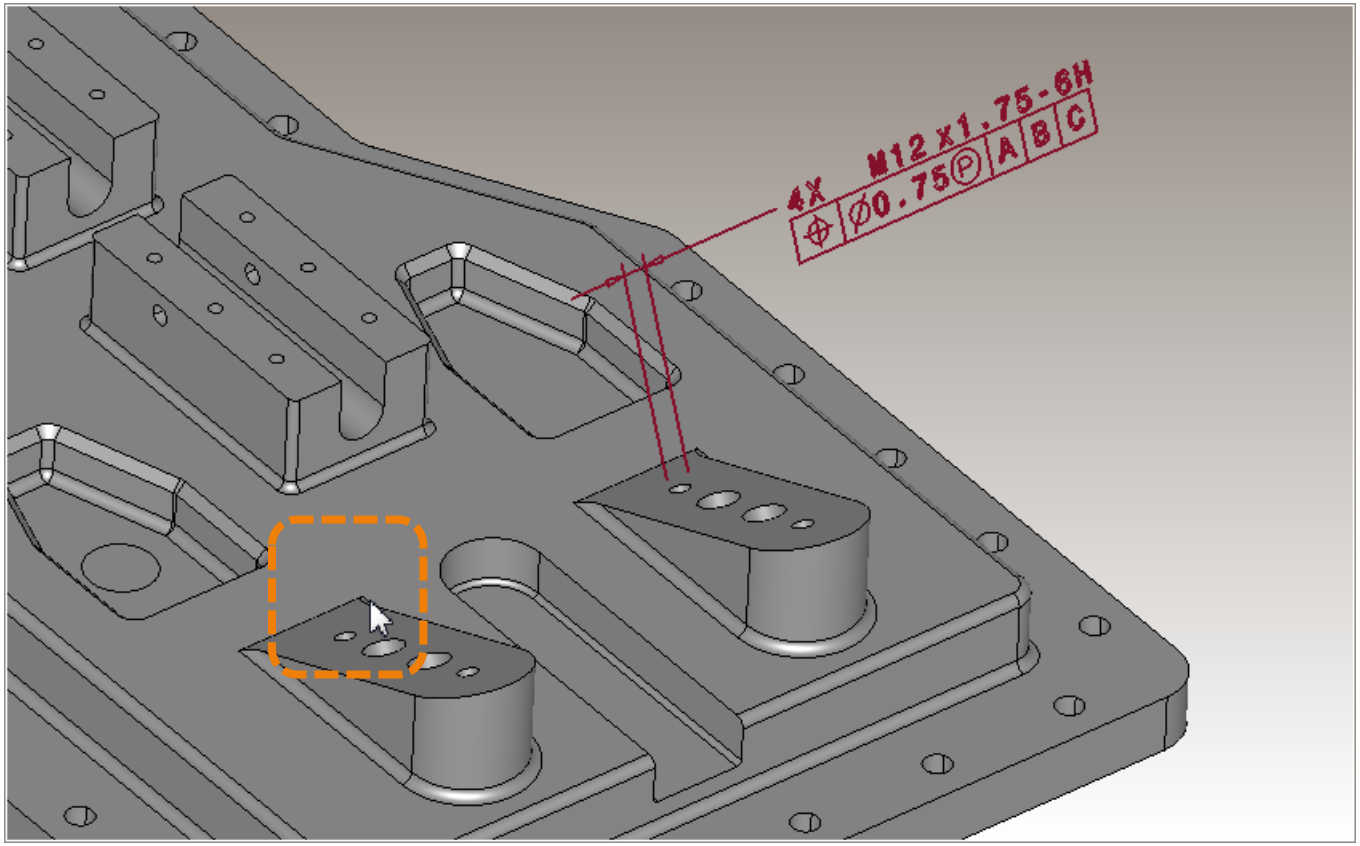

The length of the projected tolerance zone for this feature control frame is defined as a separate dimension. (See related Representation Limitation) This dimension cannot be displayed in this saved view.

Return to Index

TranscenData

Annotation Visibility: DTS visible in wrong view

Presentation Limitation

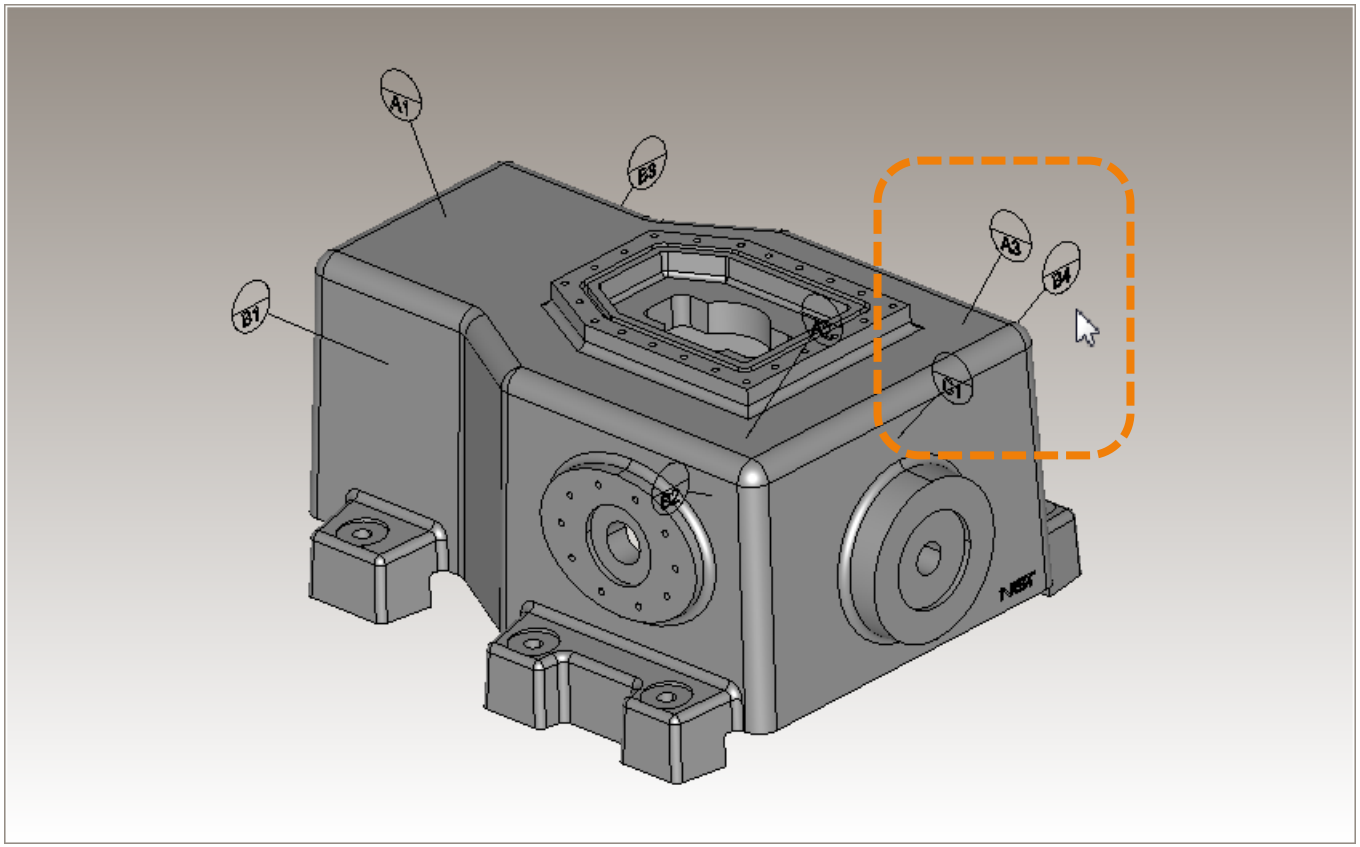

These datum target symbols are visible in a default (unspecified) saved view which cannot be deleted from the model.

Return to Index

TranscenData

CAD System Presentation Limitations for Annotation Layout

Return to Index

Annotation Layout: Counterbore DIM defined as two separate DIM's

Test Case

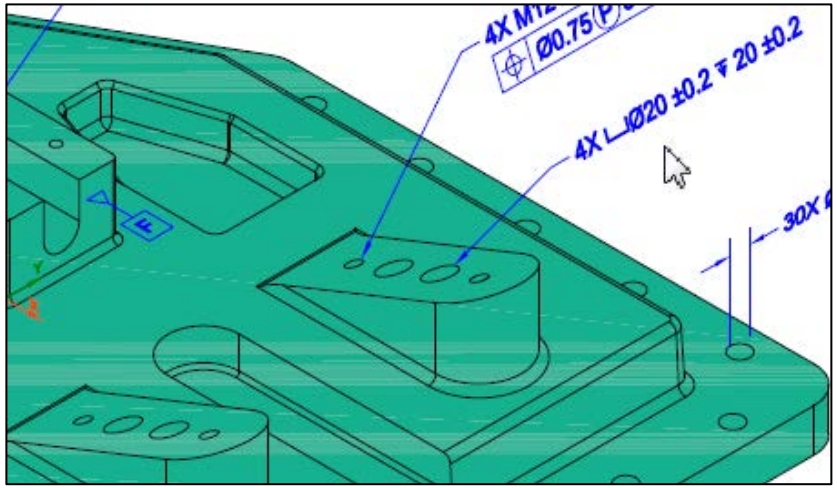

This counterbore dimension cannot be defined as a single annotation with named parameters that each have correct face associations. It must be defined as two separate dimensions.

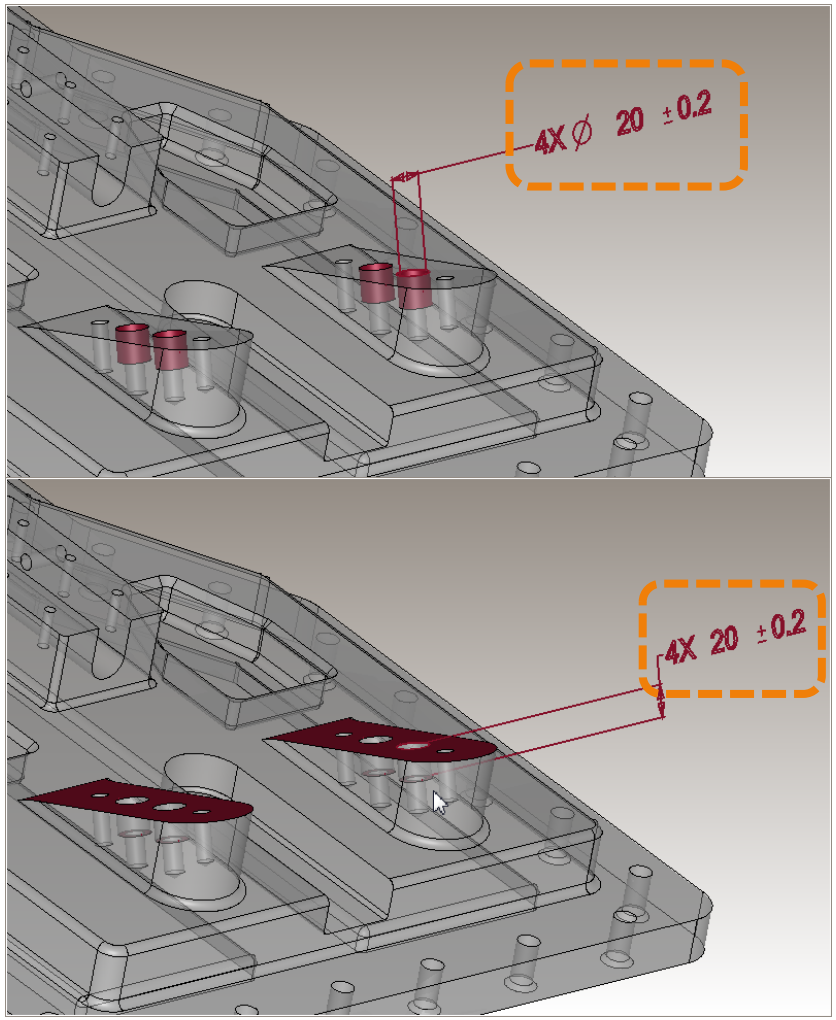

Return to Index

Annotation Layout: Countersink DIM defined as two separate DIM's

Test Case

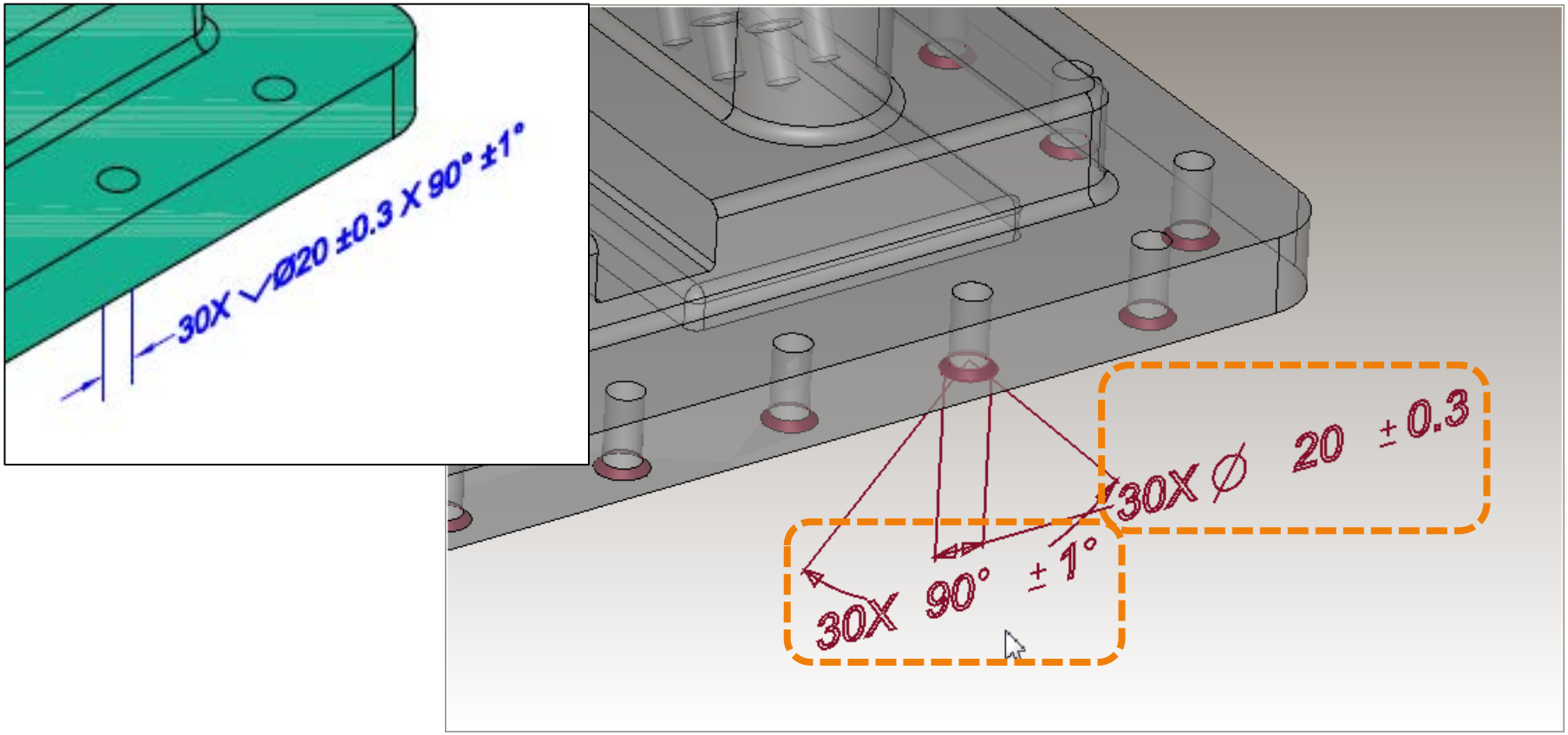

This countersink dimension cannot be defined as a single annotation with named parameters that each have correct face associations. It must be defined as two separate dimensions.

Return to Index

TranscenData

Annotation Layout: Threaded hole DIM defined as two separate DIM's

Presentation Limitation

Test Case

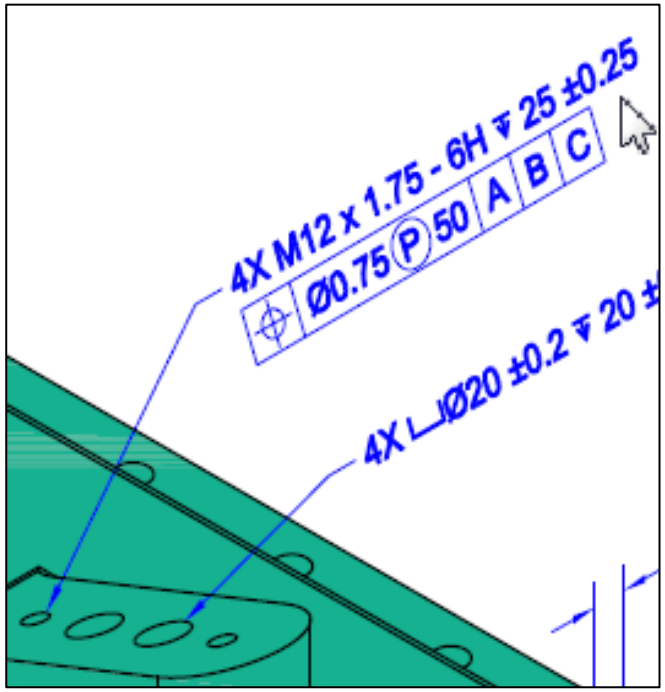

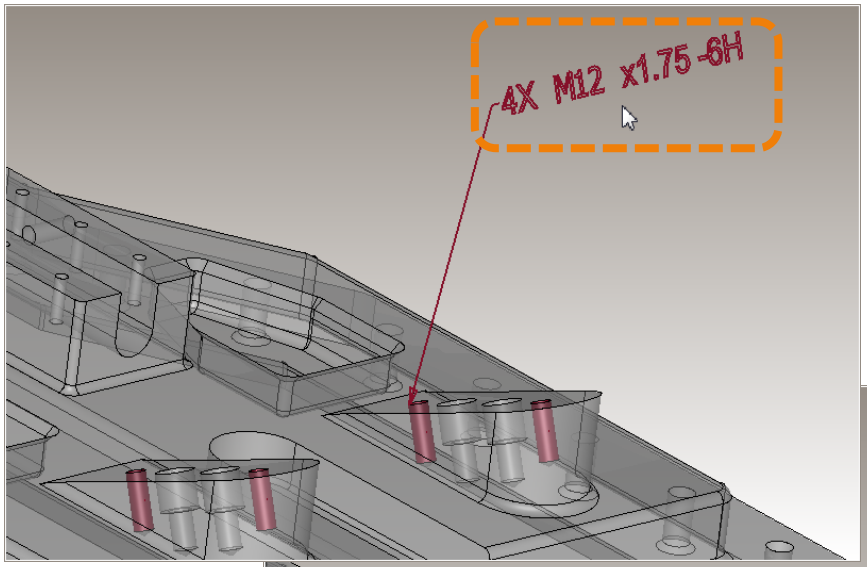

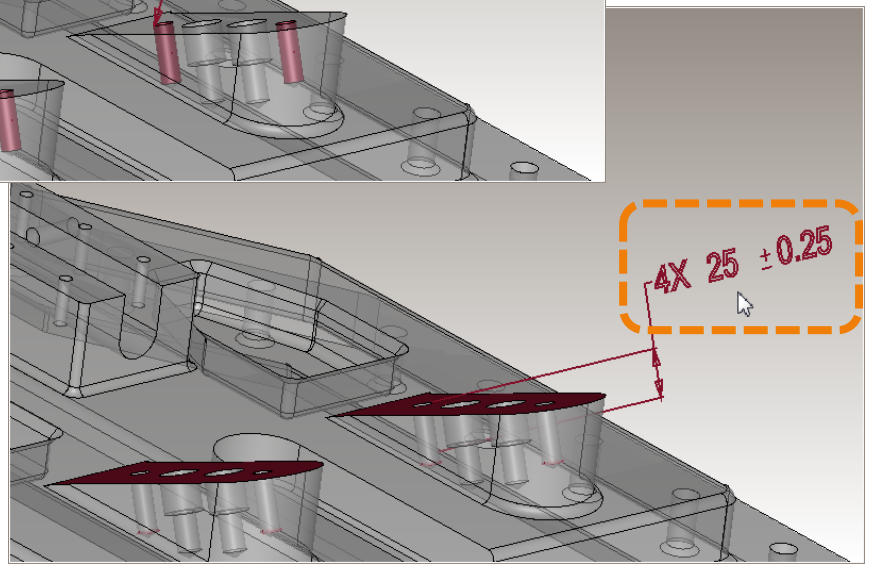

This threaded hole dimension cannot be defined as a single annotation with named parameters that each have correct face associations. It must be defined as two separate dimensions.

Return to Index

TranscenData

Annotation Layout: DIM limits displayed in reversed order

Presentation Limitation

Test Case

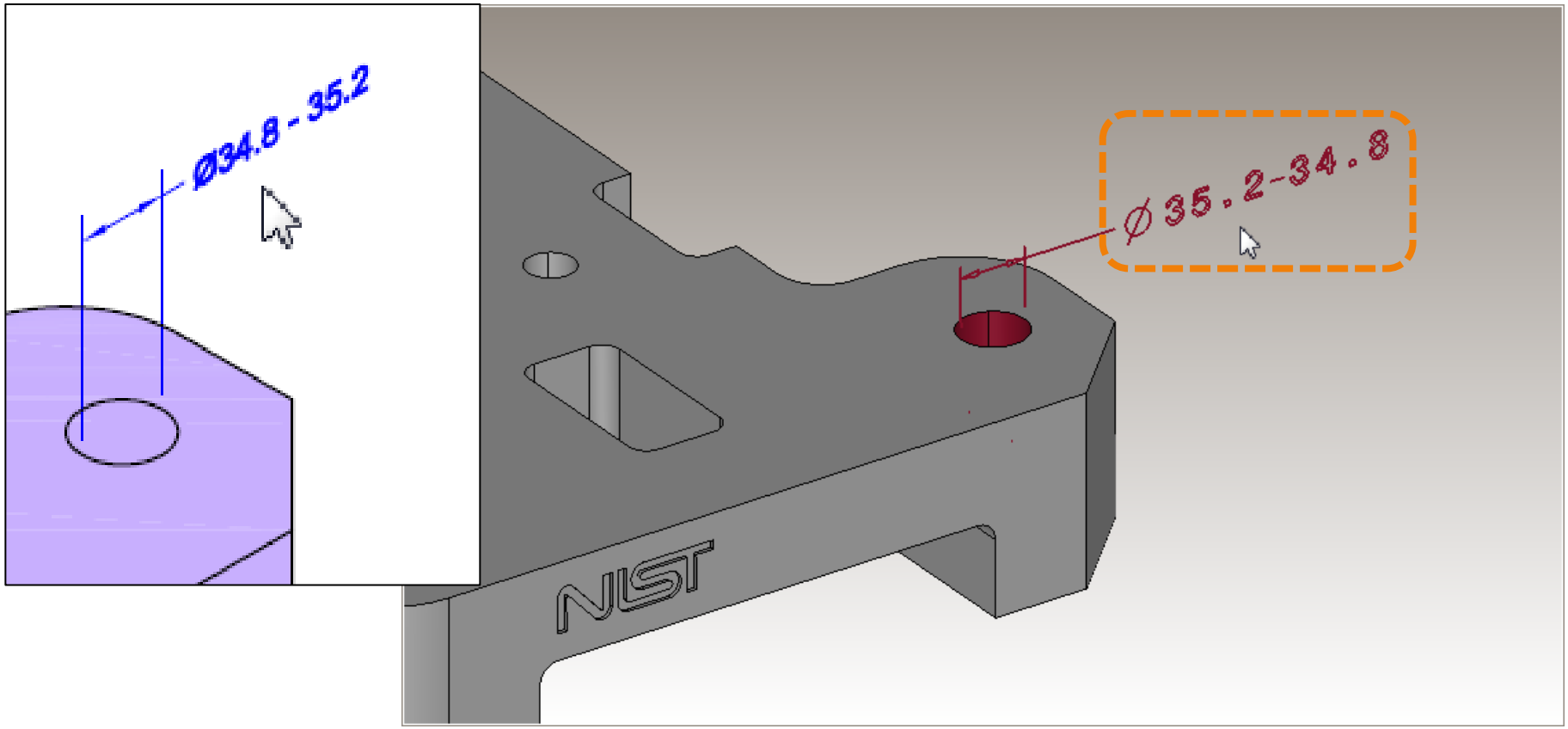

The lower and upper limits of this dimension are displayed in the reverse order from what is specified.

Return to Index

TranscenData

Annotation Layout: DIM limits not displayed horizontally

Presentation Limitation

Test Case

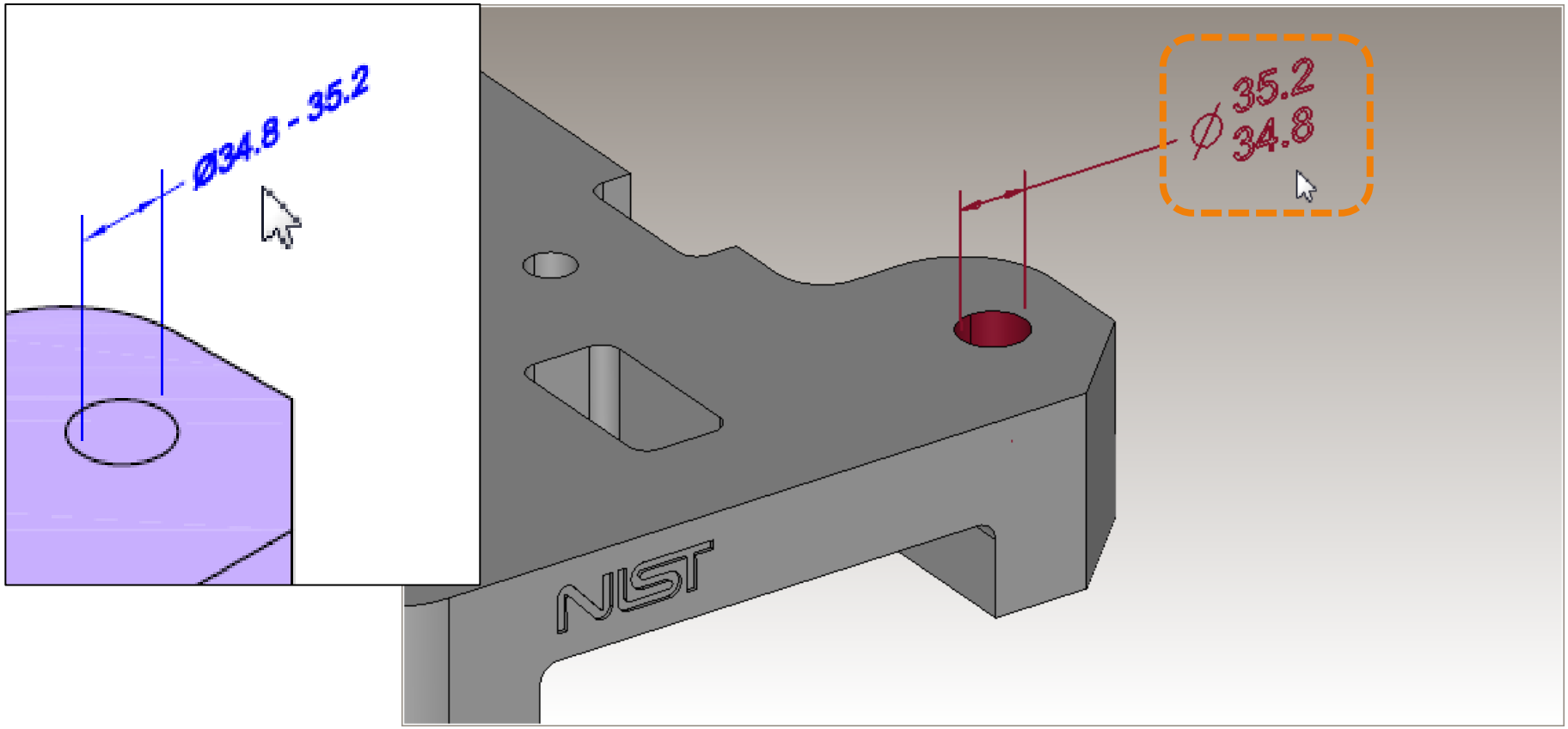

The lower and upper limits of this dimension are not displayed horizontally as specified.

Return to Index

TranscenData

Annotation Layout:
DTS target area diameter defined as separate DIM

Presentation Limitation

Test Case

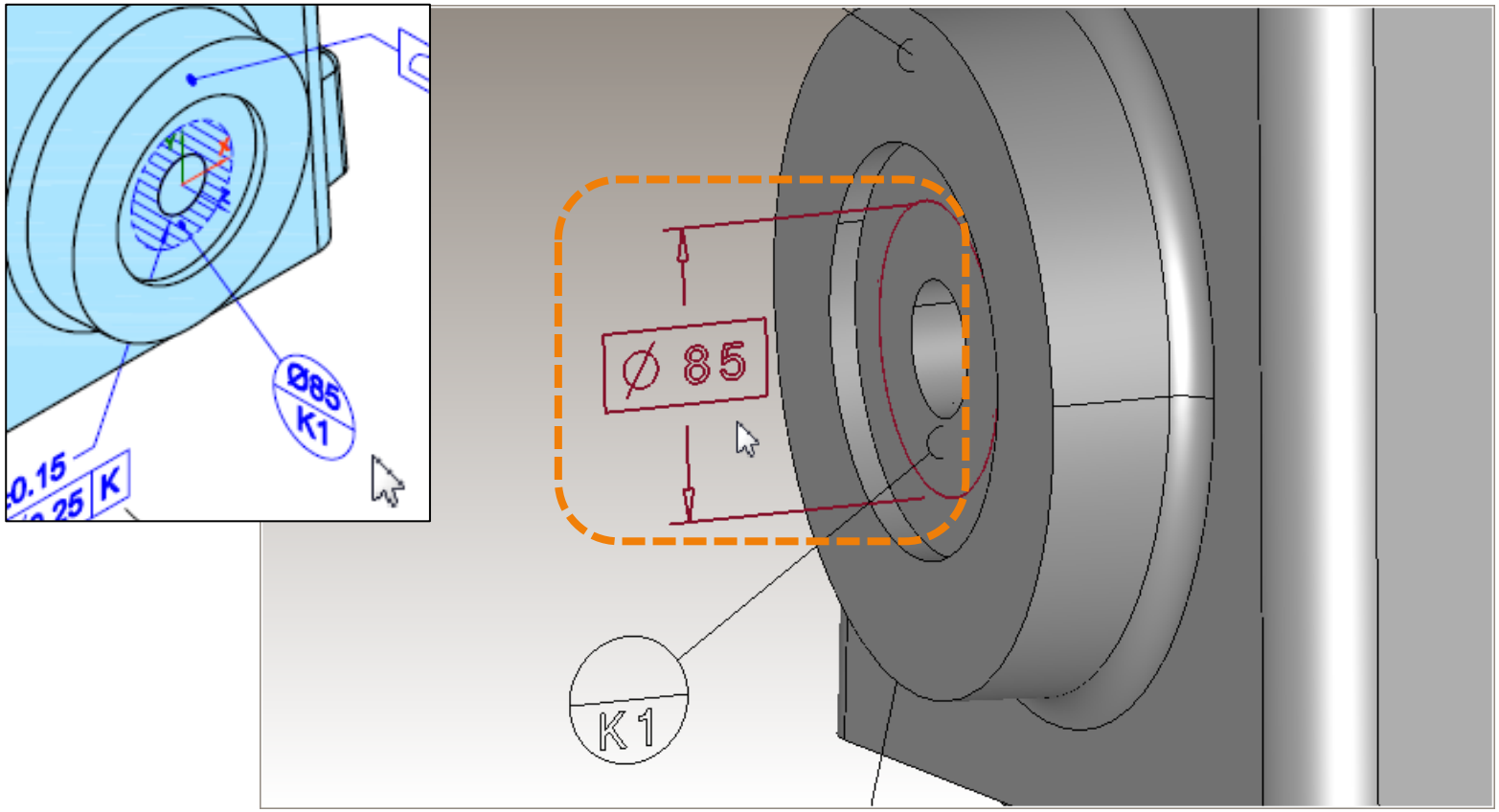

The diameter of this datum target area is defined as a separate dimension and not shown in the upper half of the datum target symbol as specified.

Return to Index

TranscenData

Annotation Layout: FCF text displayed above rather than below

Test Case

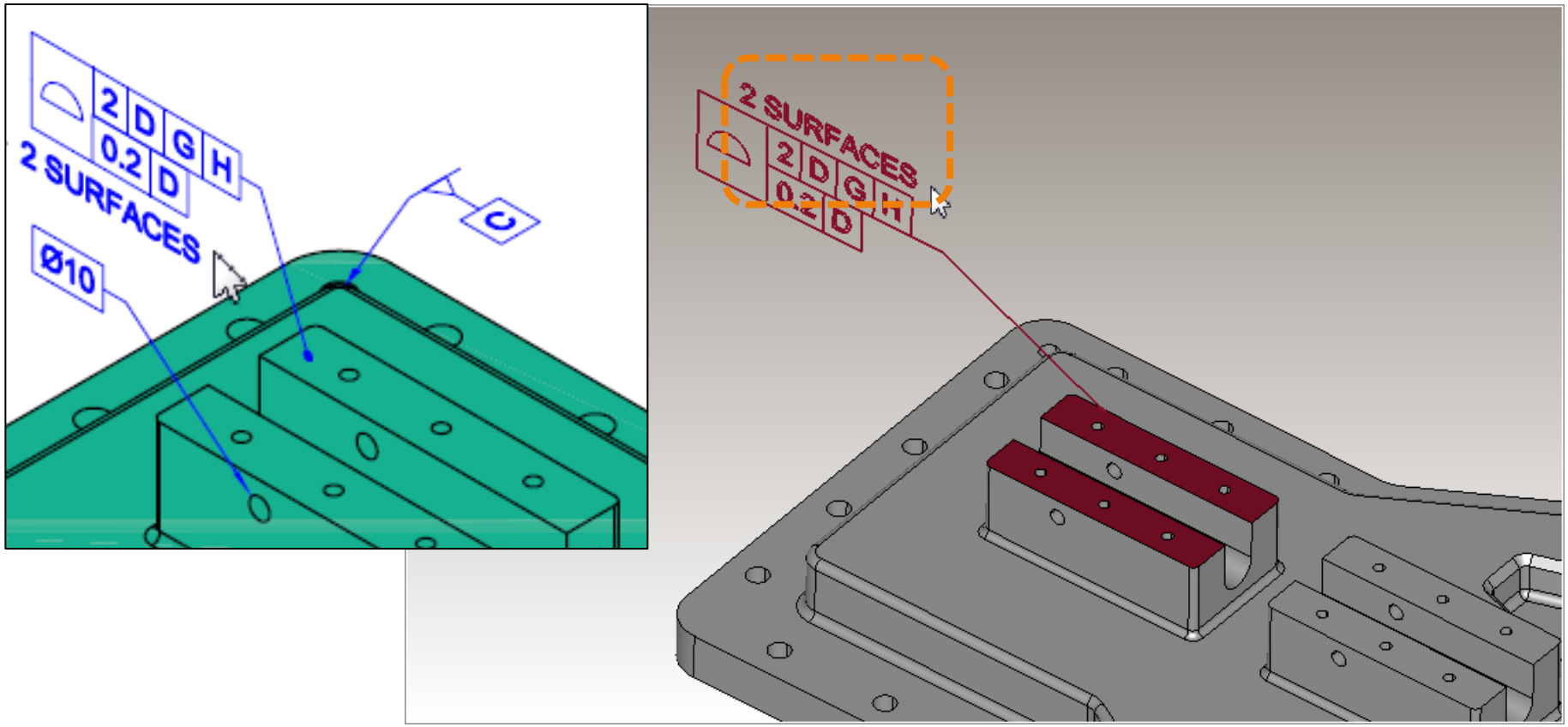

The “2 SURFACES” text is displayed above this feature control frame and not below as specified.

Return to Index

TranscenData

Annotation Layout: FCF text displayed on right rather than below

Presentation Limitation

Test Case

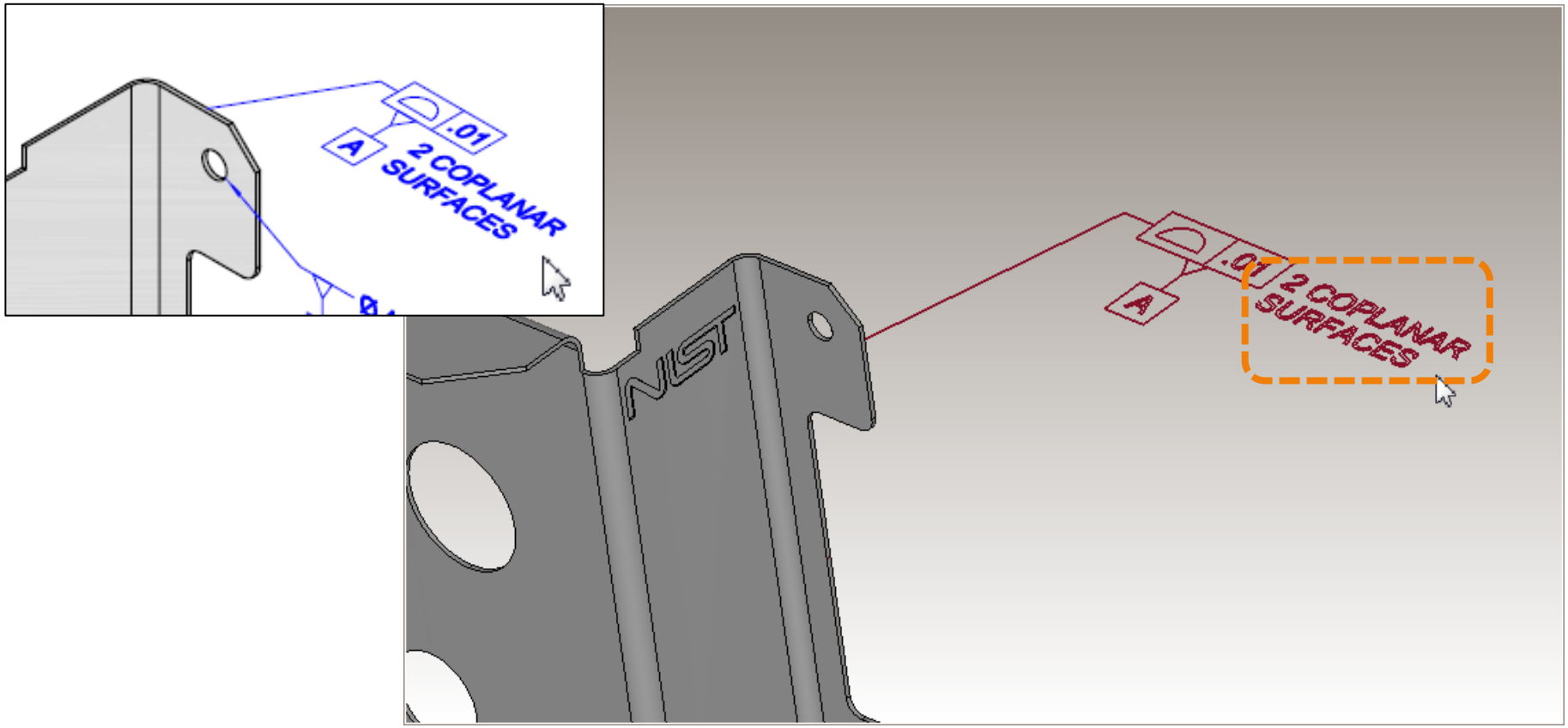

The “2 COPLANAR SURFACES” text is displayed on the right of this feature control frame and not below as specified.

Return to Index

TranscenData

CAD System Presentation Limitations for Annotation Location

Return to Index

Annotation Location: DFS not attached to FCF

Presentation Limitation

Test Case

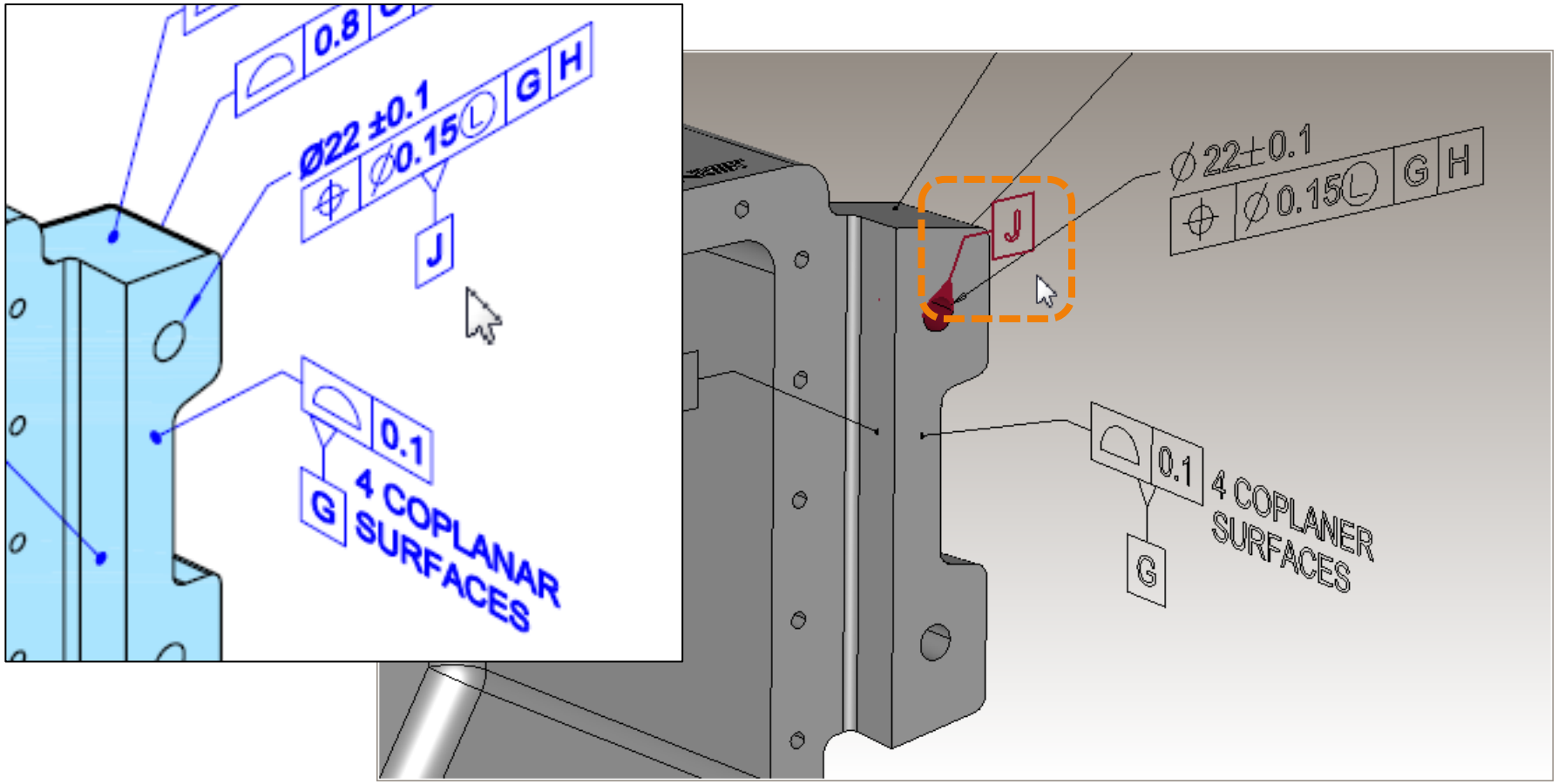

This datum feature symbol is not attached to the feature control frame as specified.

Return to Index

ITI TranscenData

Annotation Location: DFS overlaps DIM graphics

Presentation Limitation

Test Case

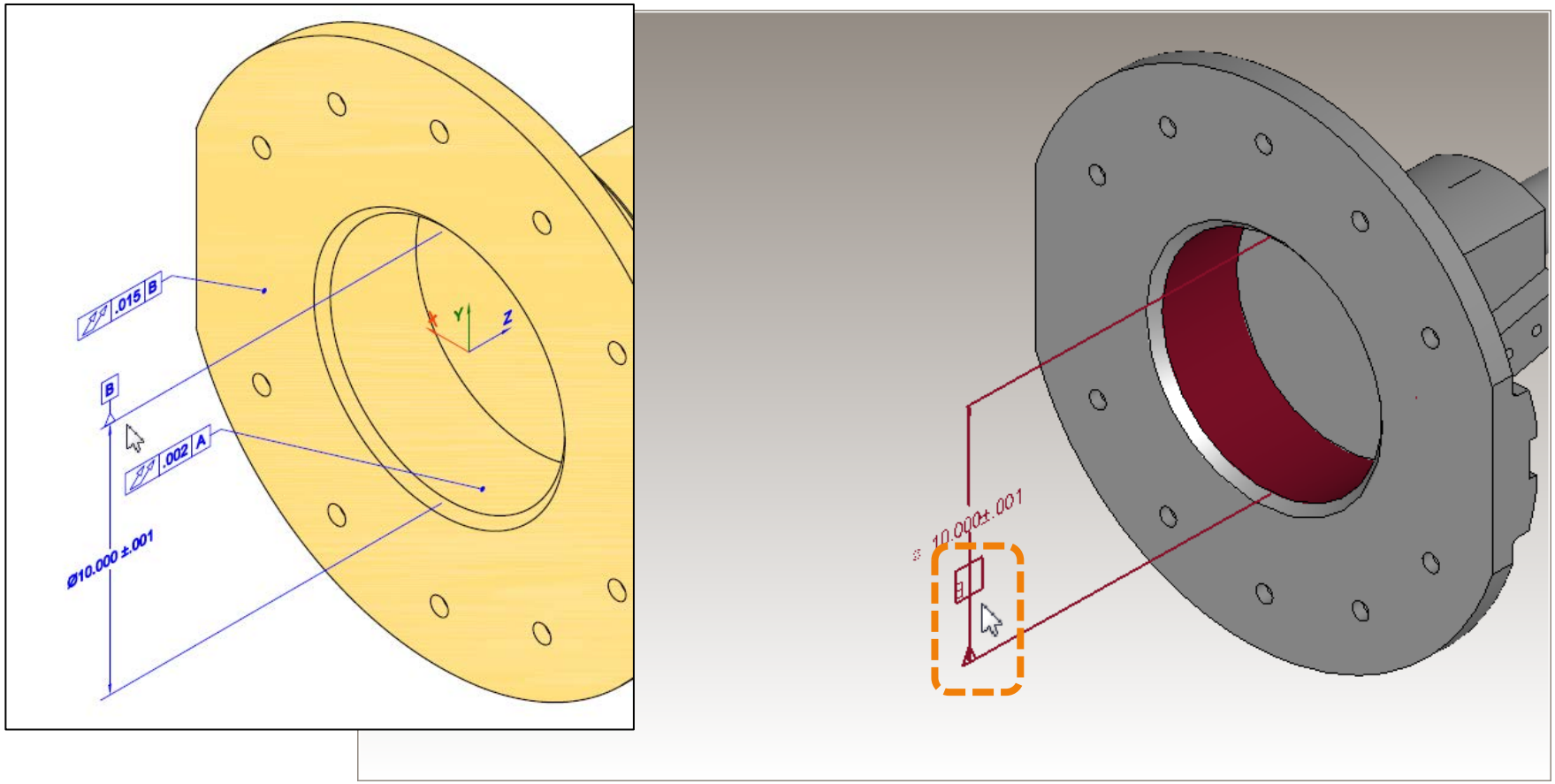

The display of this datum feature symbol overlaps the dimension to which it is attached.

Return to Index

ITI TranscenData

Annotation Location: DFS partially buried in solid

Presentation Limitation

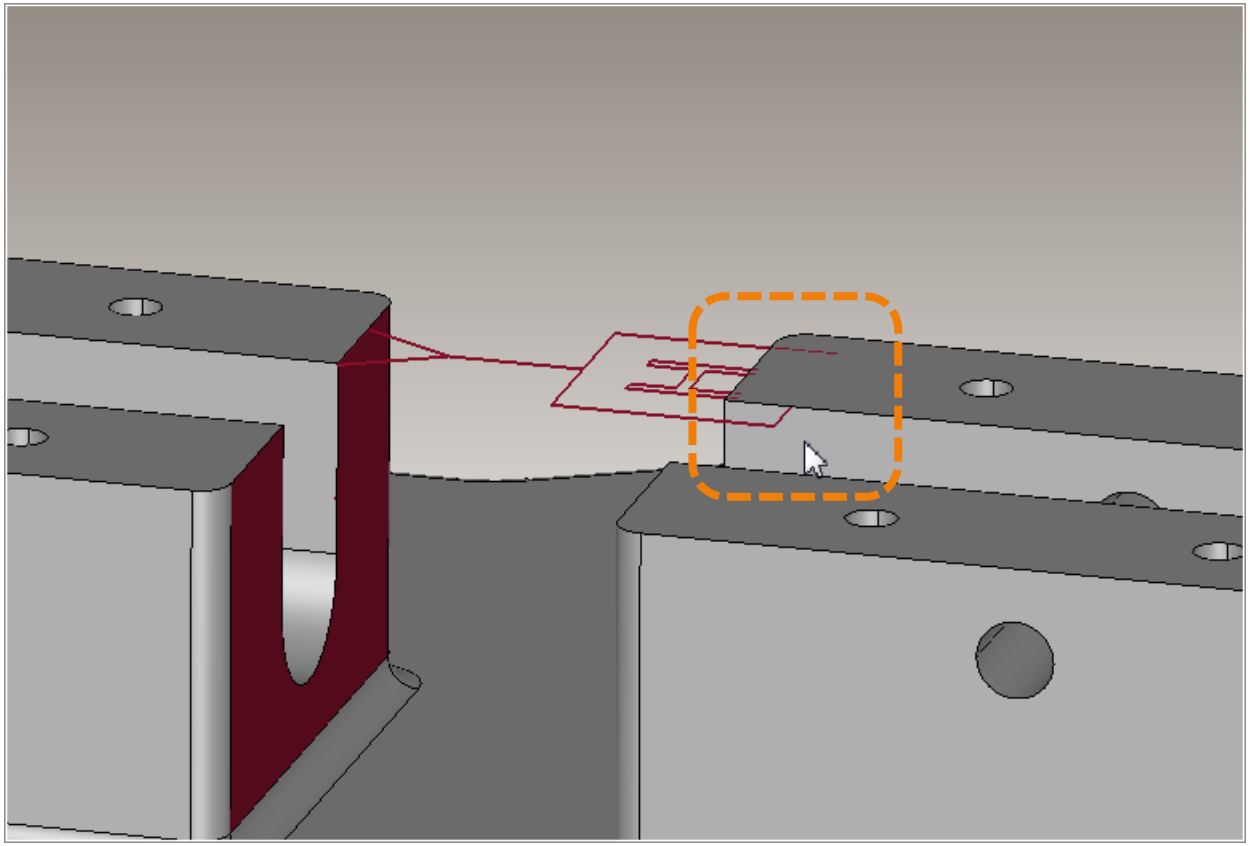

A portion of this datum feature symbol extends into the solid model, obscuring its display.

Return to Index

ITI TranscenData

Annotation Location: FCF partially buried in solid

Presentation Limitation

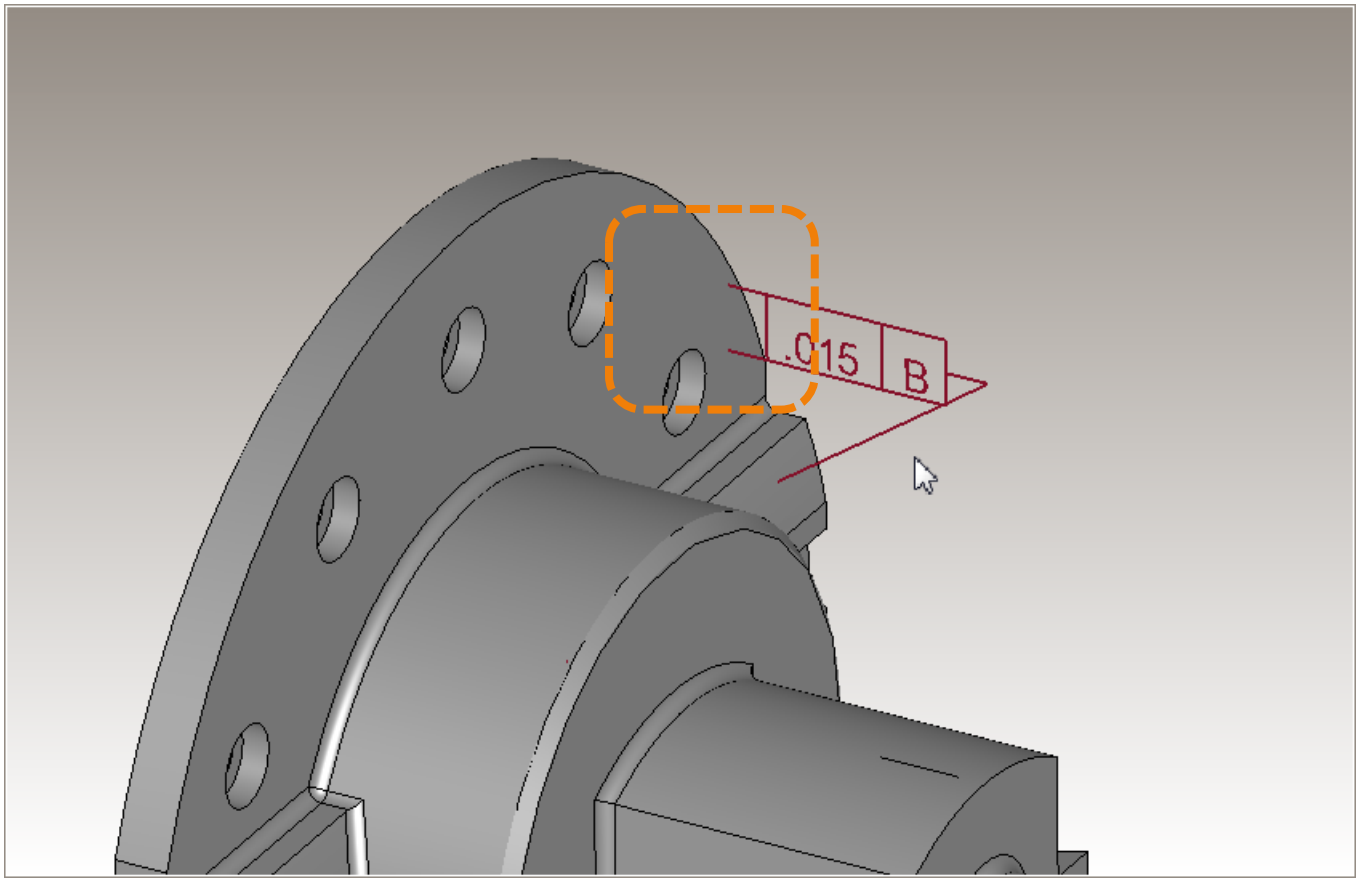

A portion of this feature control frame extends into the solid model, obscuring its display.

Return to Index

TranscenData

CAD System Presentation Limitations for Annotation Orientation

Return to Index

Annotation Orientation: DIM text orientation is wrong

Presentation Limitation

Test Case

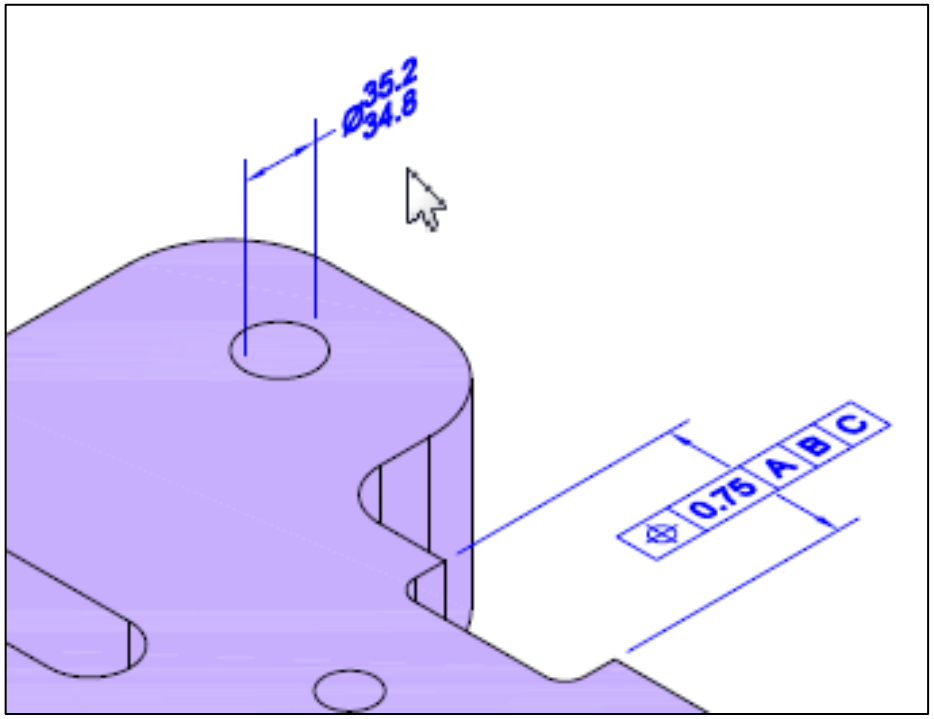

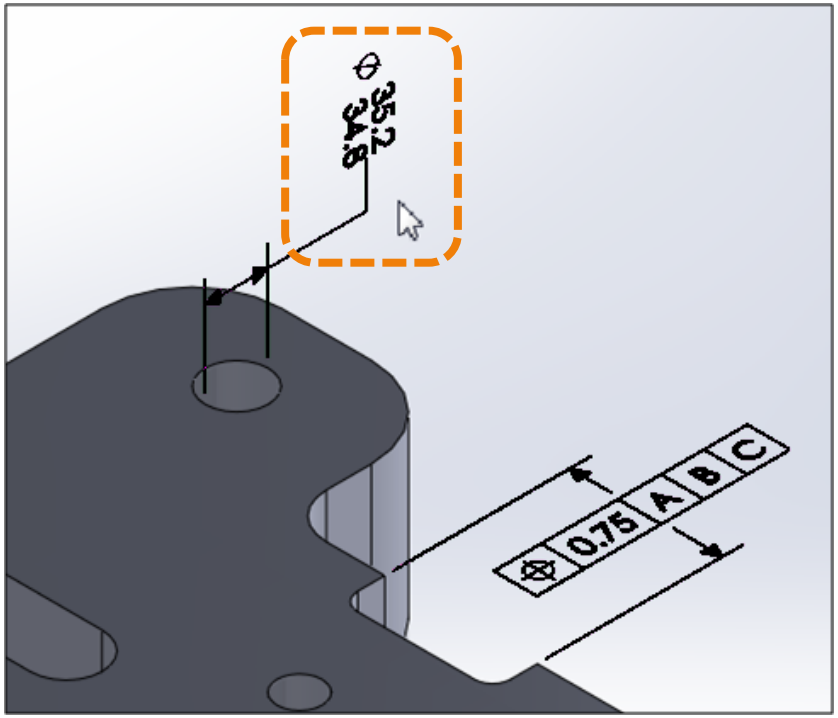

This dimension is not oriented horizontally as specified.

Return to Index

TranscenData

Annotation Orientation: DTS text is backwards in this view

Presentation Limitation

Test Case

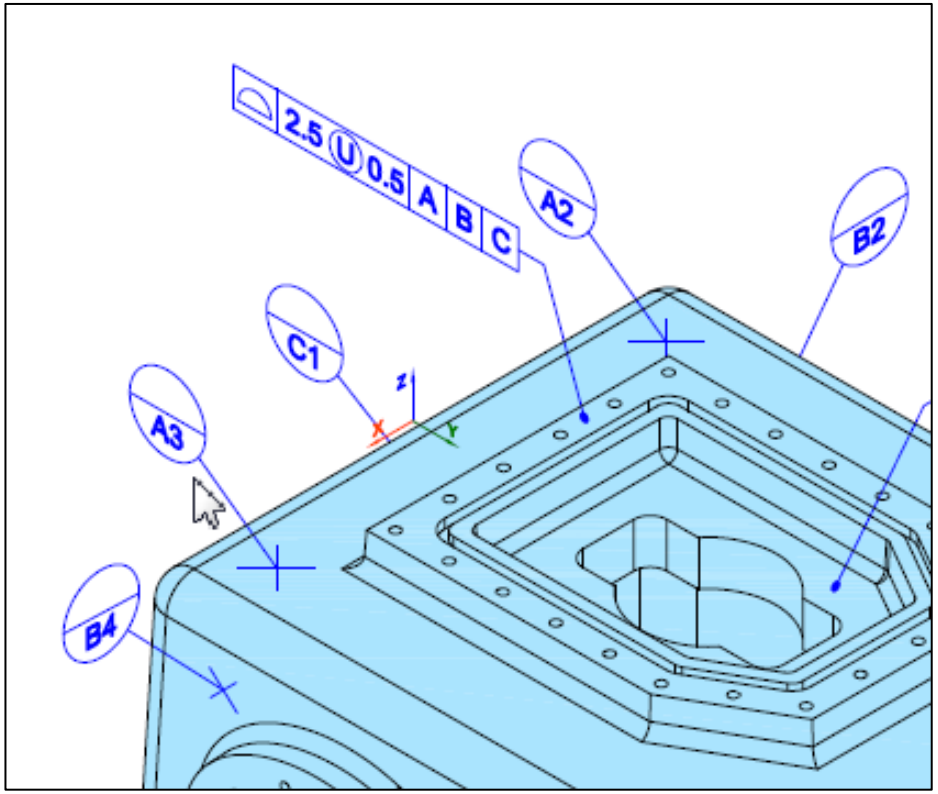

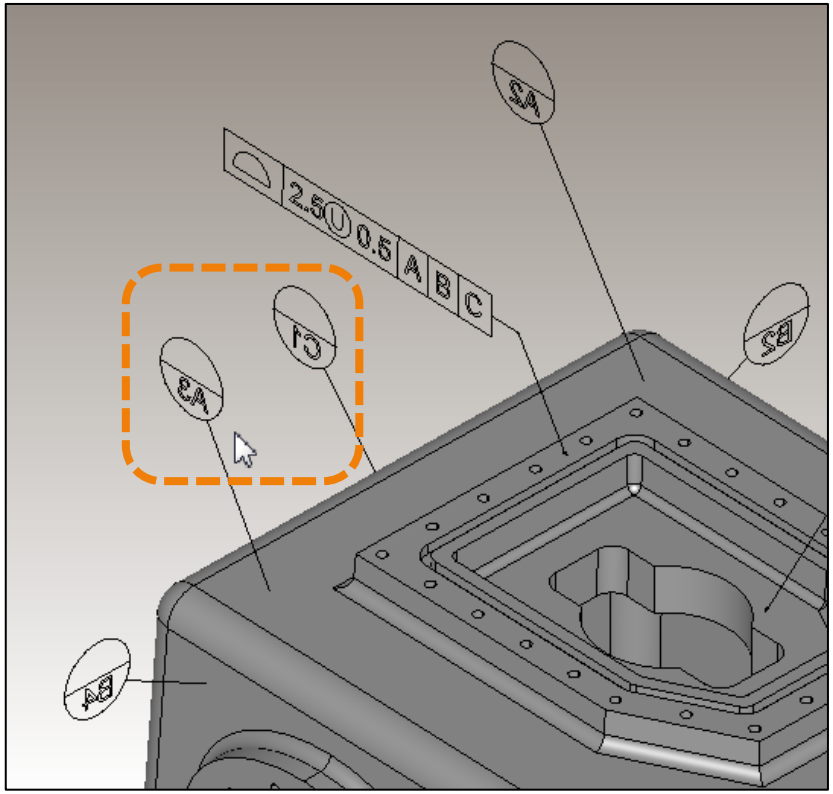

The read direction for the datum target symbols' text is backwards in this view from what is specified.

Return to Index

ITI TranscenData

CAD System Presentation Limitations for Annotation Lines

Return to Index

Annotation Lines: DFS has no extension line

Presentation Limitation

Test Case

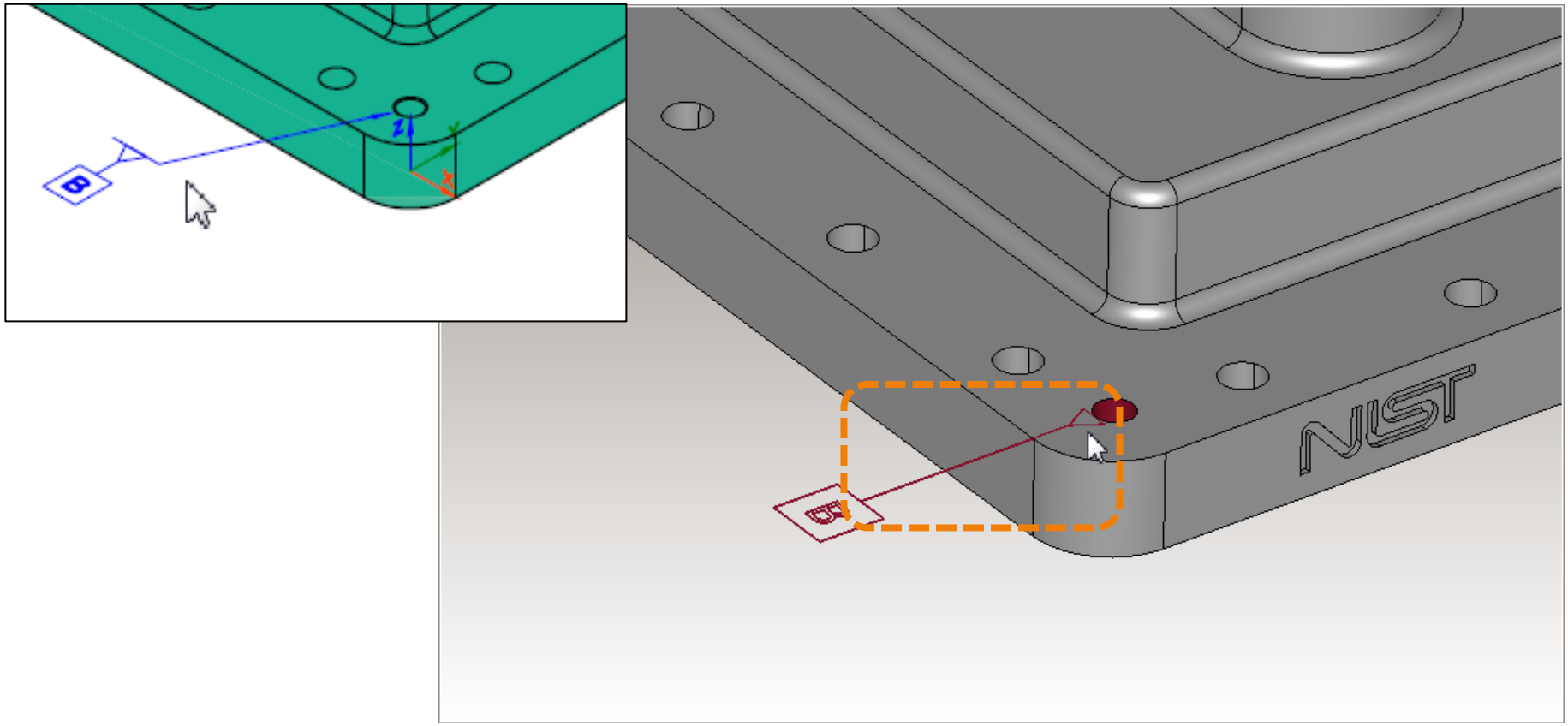

This datum feature symbol does not have the specified extension line.

Return to Index

ITI TranscenData

CAD System Presentation Limitations for Annotation Text

Return to Index

Annotation Text: DIM has extraneous space

Presentation Limitation

Test Case

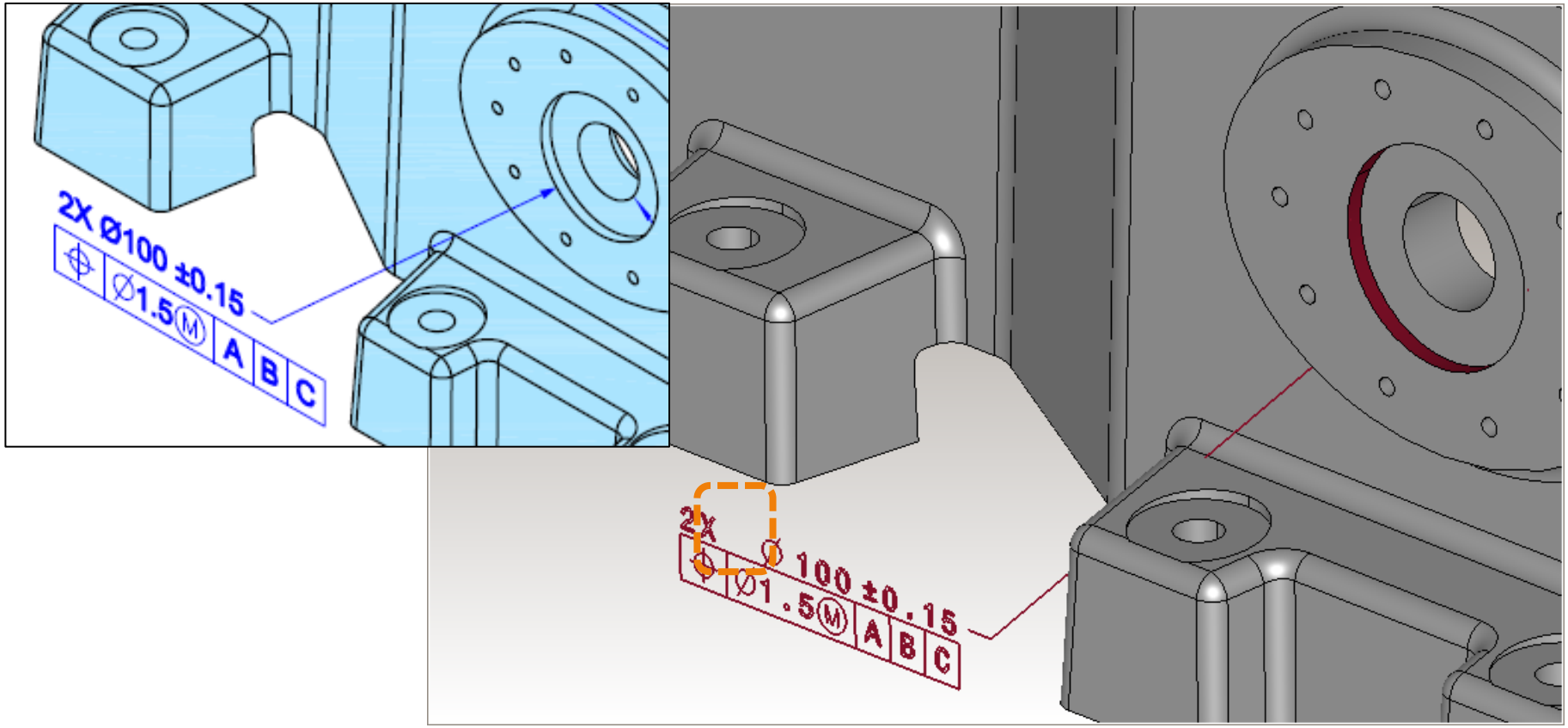

This dimension has an extra space after the pattern text (“2X”) which is not specified.

Return to Index

TranscenData

Annotation Text: DTS text is extraneous

Presentation Limitation

Test Case

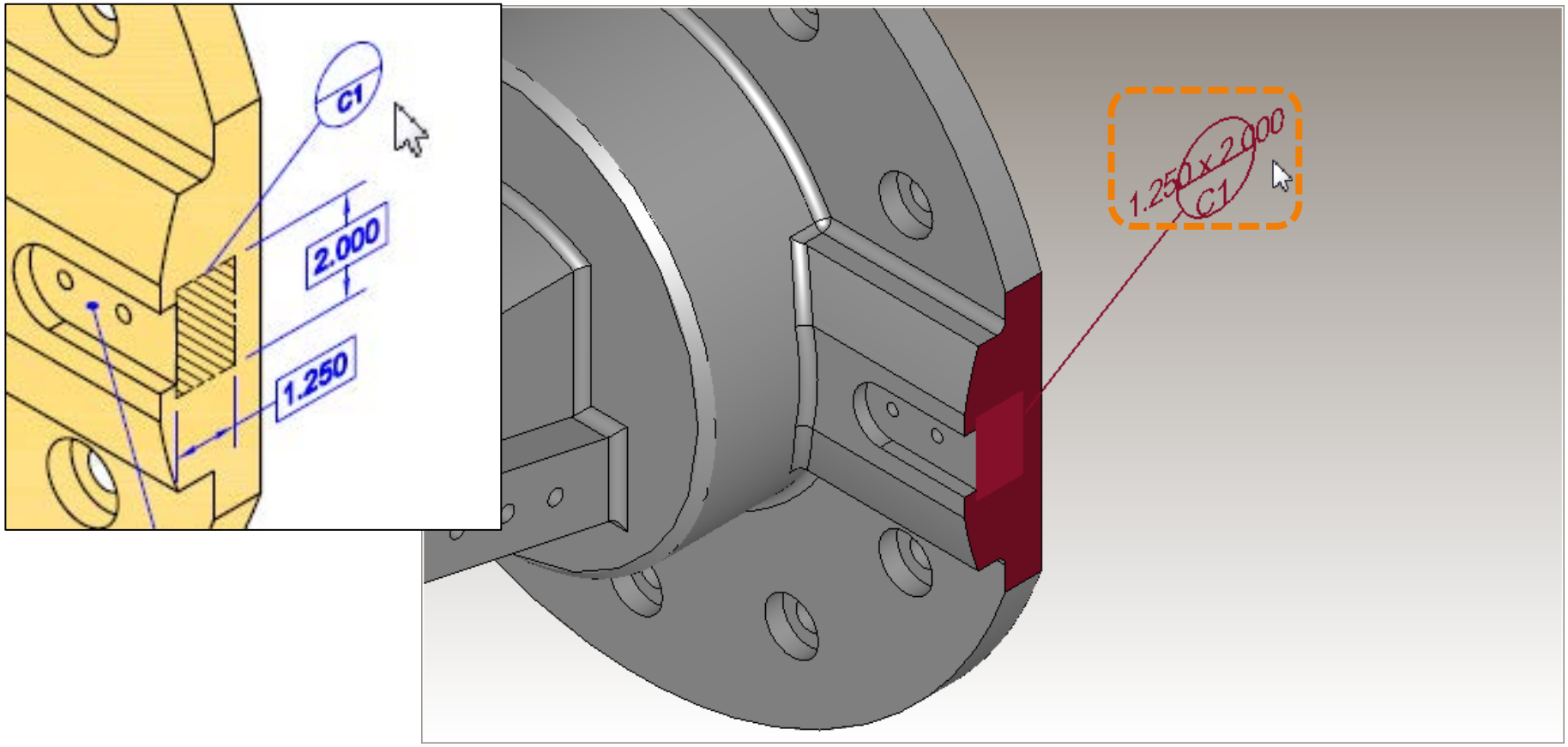

The target area dimensions shown in the upper half of this datum target symbol are not specified.

Return to Index

TranscenData

Annotation Text: FCF missing note text

Presentation Limitation

Test Case

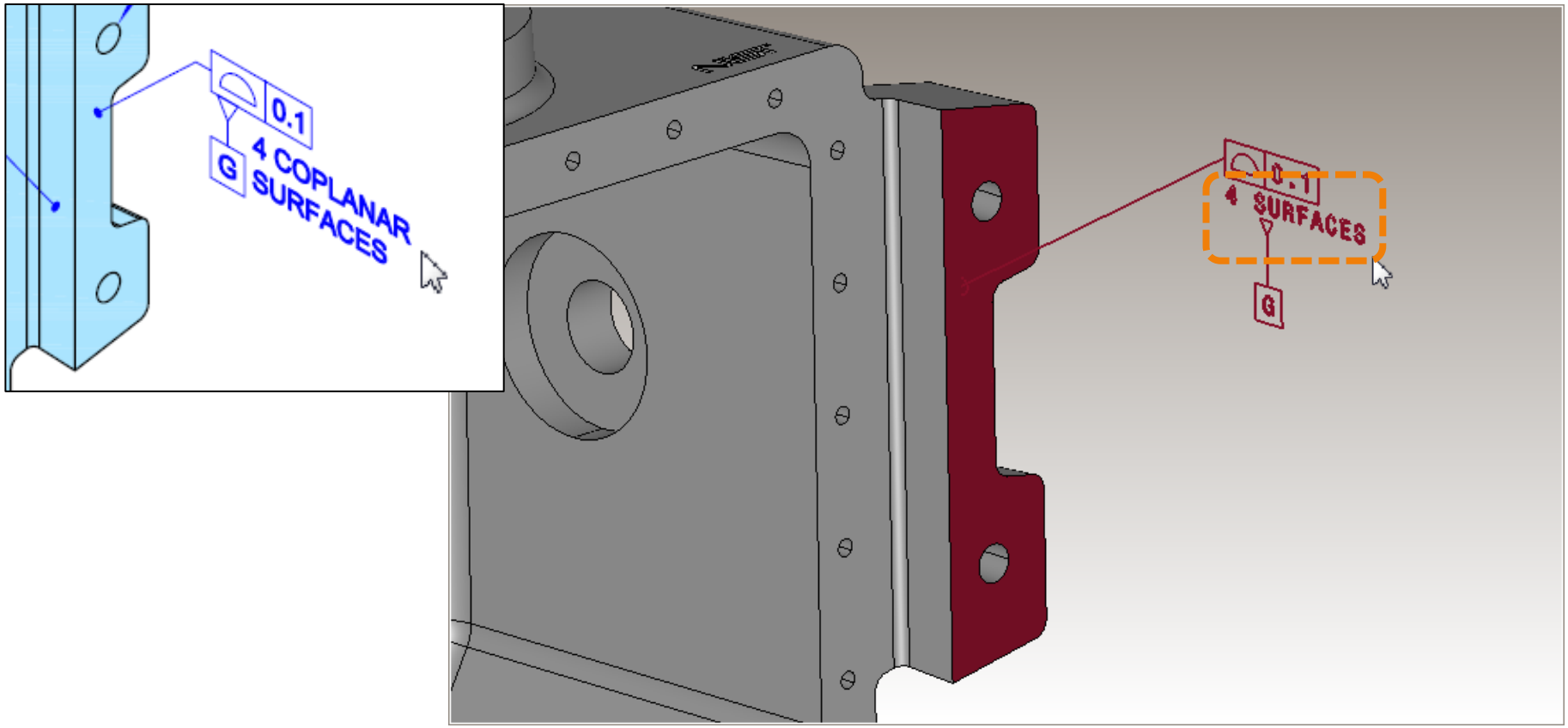

The specified “COPLANAR” text is missing for this feature control frame.

Return to Index

TranscenData

Annotation Text: FCF missing projected tolerance zone length

Test Case

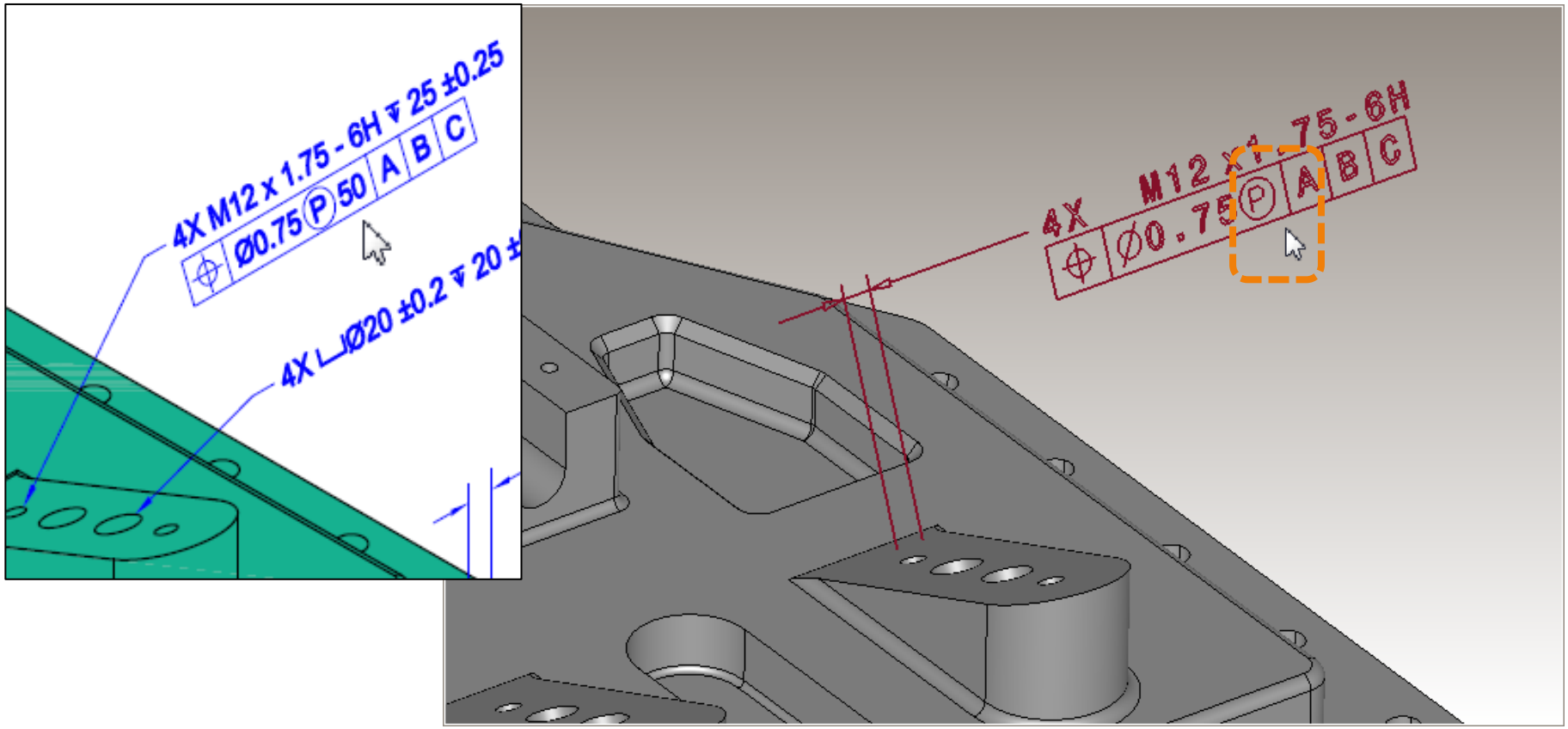

The length of the projected tolerance zone for this feature control frame is not display as specified.

Return to Index

ITI TranscenData

Annotation Text: FCF text is extraneous

Presentation Limitation

Test Case

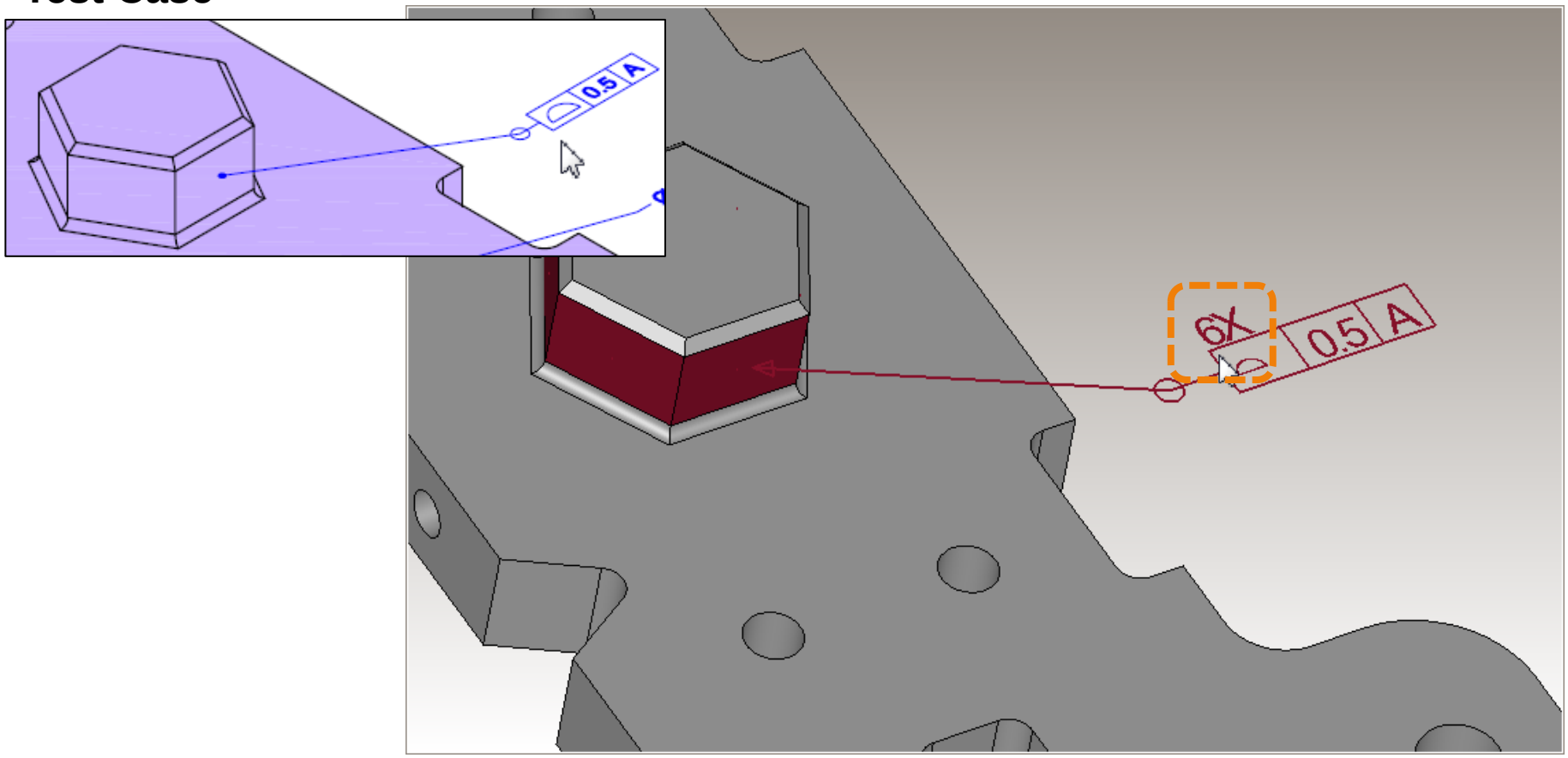

The “6X” text above this feature control frame is not specified in the test case and is extraneous with the all-around symbol.

Return to Index

TranscenData

Annotation Text: FCF text is extraneous

Presentation Limitation

Test Case

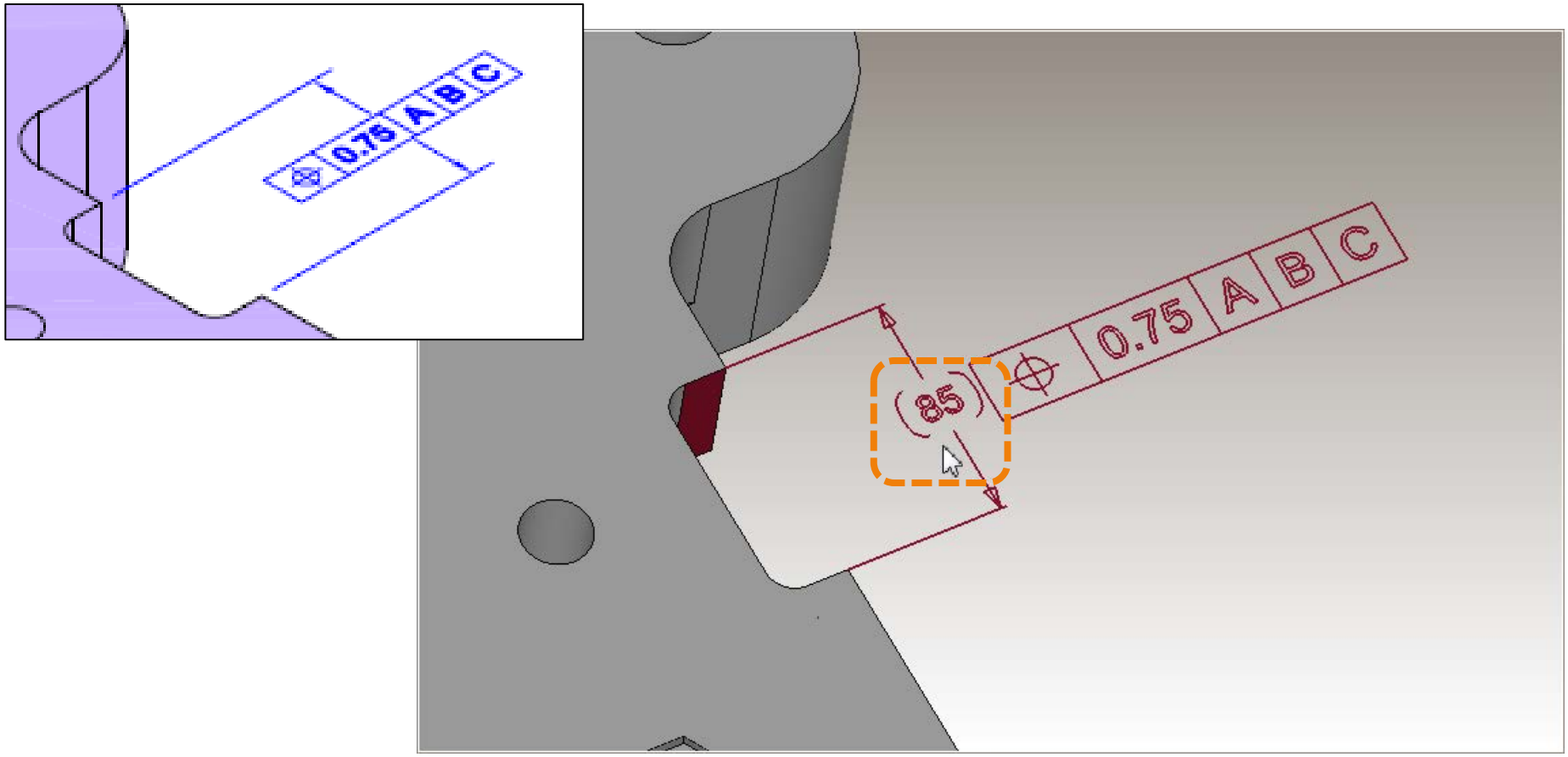

The “(85)” text on the left of this feature control frame is not specified in the test case.

Return to Index

TranscenData

CAD System Presentation Limitations for Coordinate System Visibility

Return to Index

Coordinate System Visibility: CS visible in wrong view

Presentation Limitation

Test Case

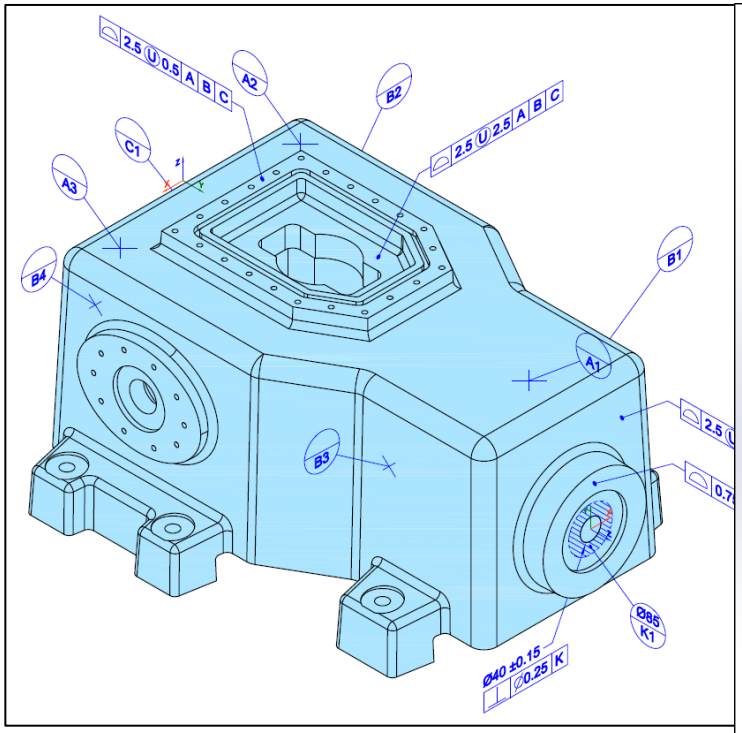

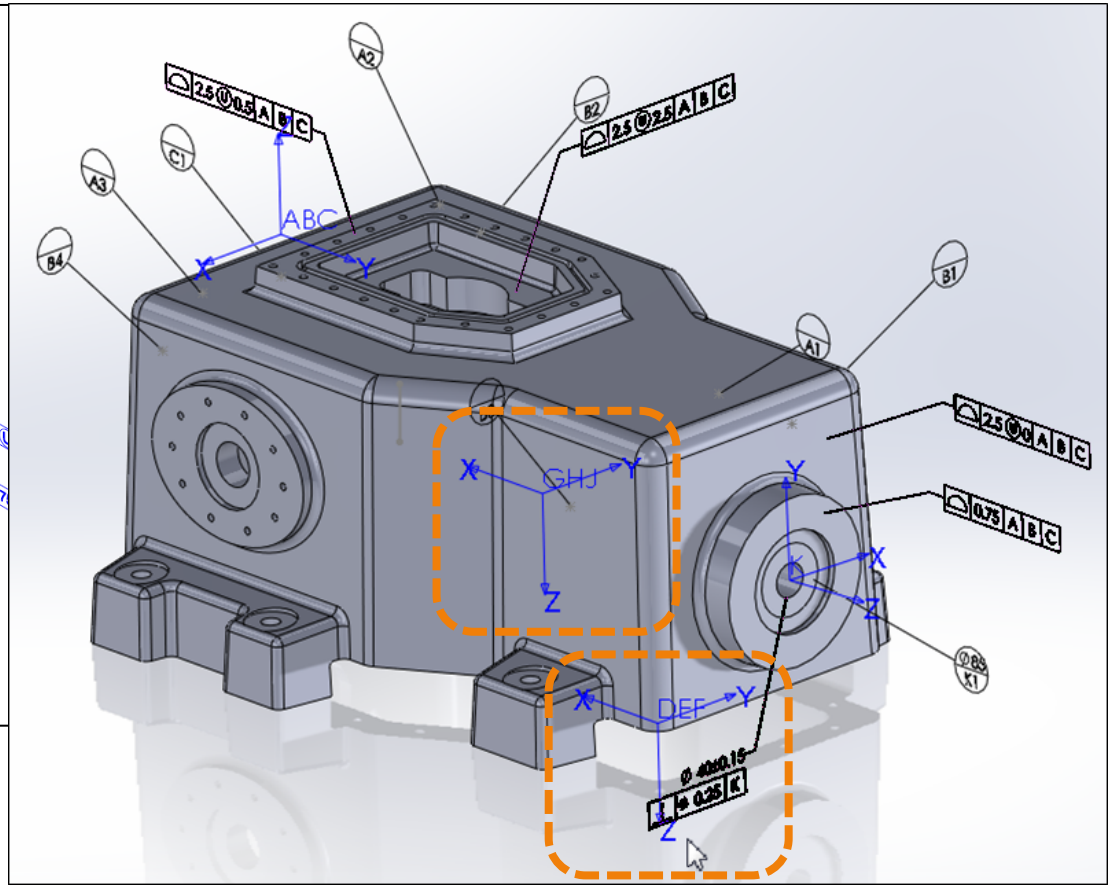

The “DEF” and “GHJ” coordinate systems are visible in a saved view in which they are not referenced.

Return to Index

ITI TranscenData

CAD System Presentation Limitations for Coordinate System Name

Return to Index

Coordinate System Name: CS name not same as DRF

Presentation Limitation

Test Case

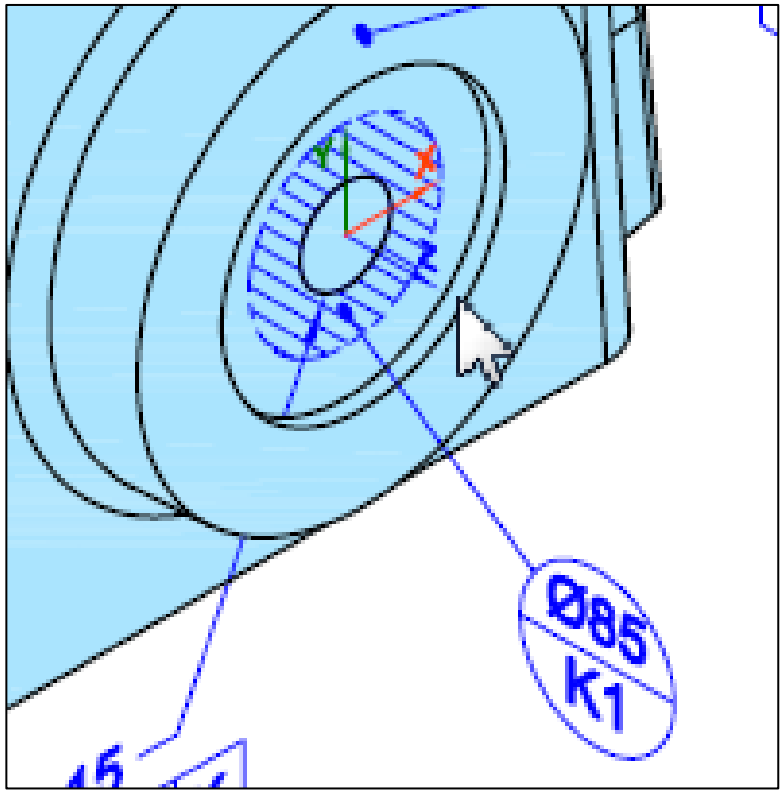

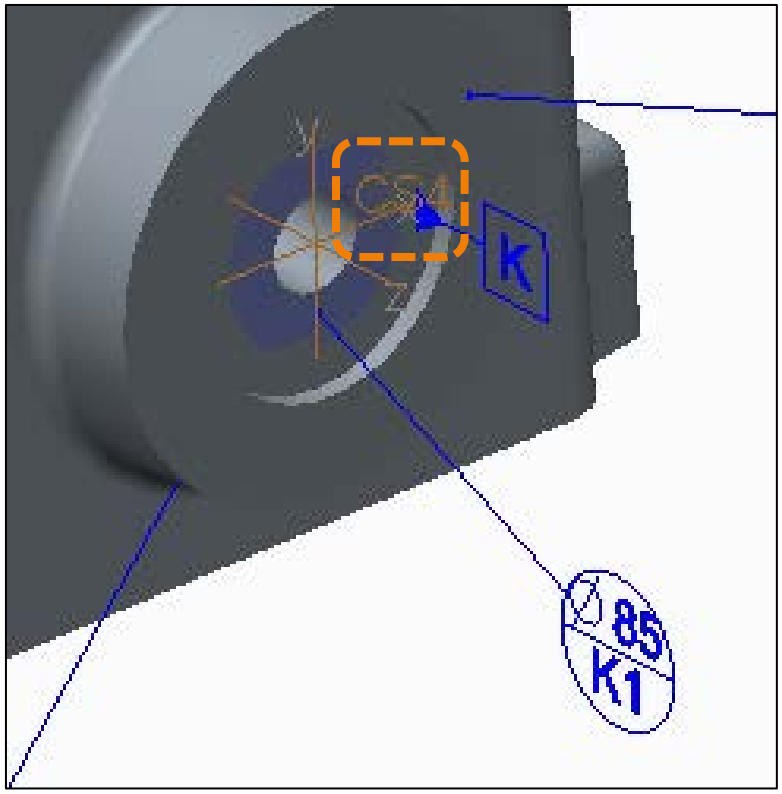

Because none of the systems enable an explicit link between annotations and coordinate systems, the name of each coordinate system should match its datum reference frame, thus providing an implicit (visual) link.
This coordinate system cannot be named with a single letter (“K”).

Return to Index

CAD System Presentation Limitations for Coordinate System Text

Return to Index

Coordinate System Text: CS name displayed with extra large text

Presentation Limitation

Test Case

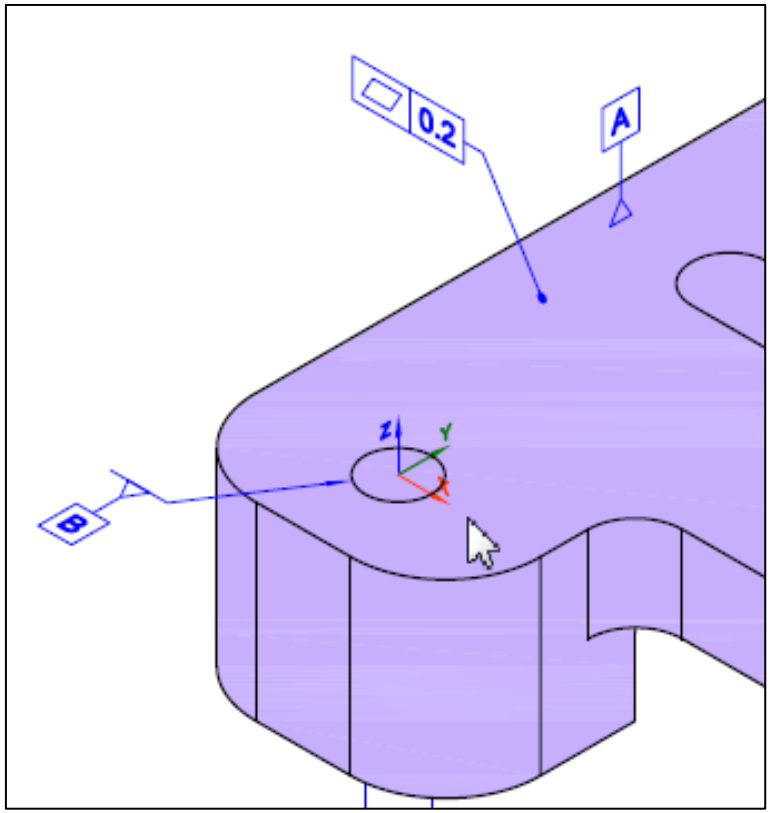

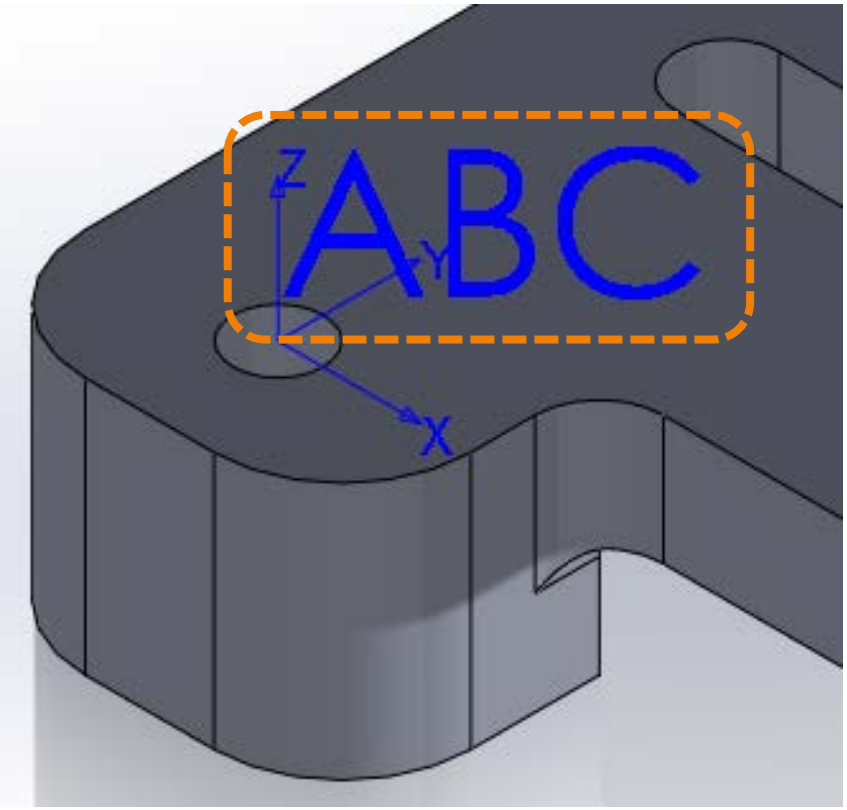

The display name for this coordinate system is extremely large.

Return to Index

ITI TranscenData

CAD System Presentation Limitations for Supplemental Geometry Visibility

Return to Index

Supplemental Geometry Visibility: SG curve visible in wrong view

Presentation Limitation

Test Case

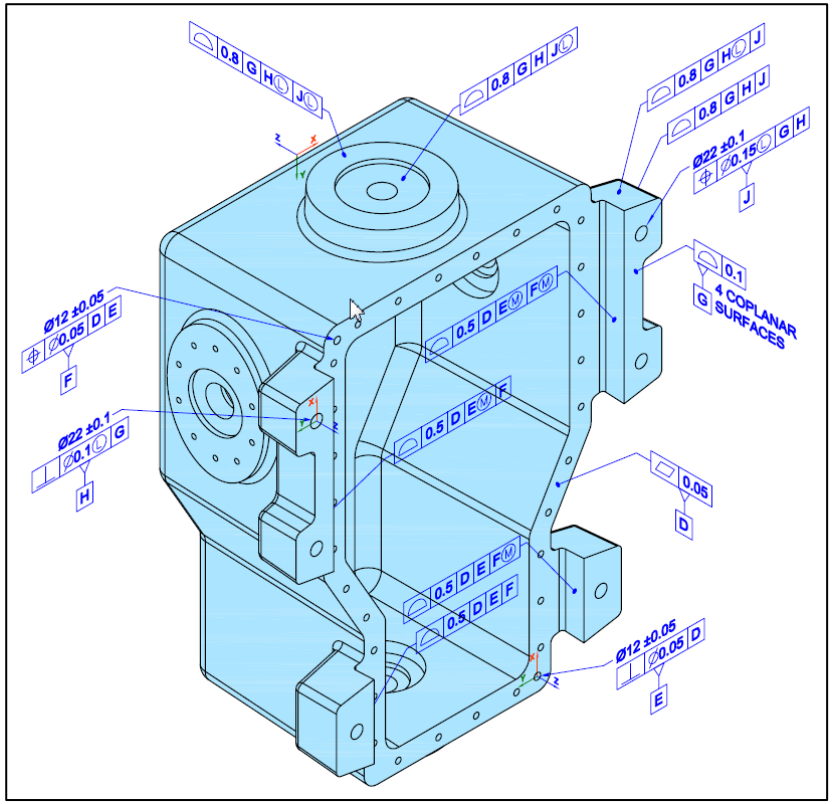

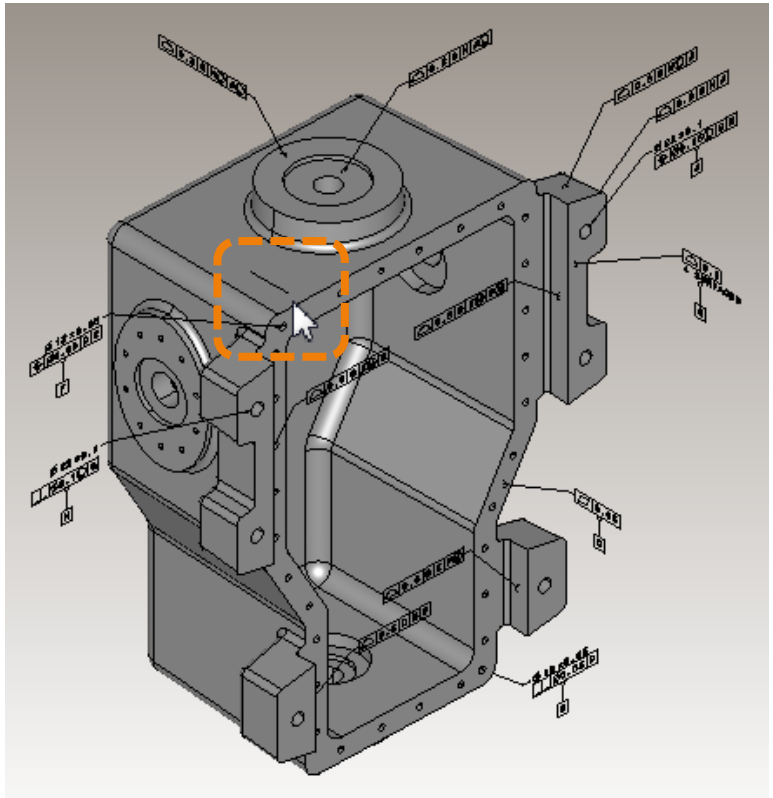

Because the profile of a line feature control frame in this model is not specified as visible in this saved view, then its associated supplemental geometry curve should not be visible.

Return to Index

ITI TranscenData

Supplemental Geometry Visibility: SG point visible in wrong view

Presentation Limitation

Test Case

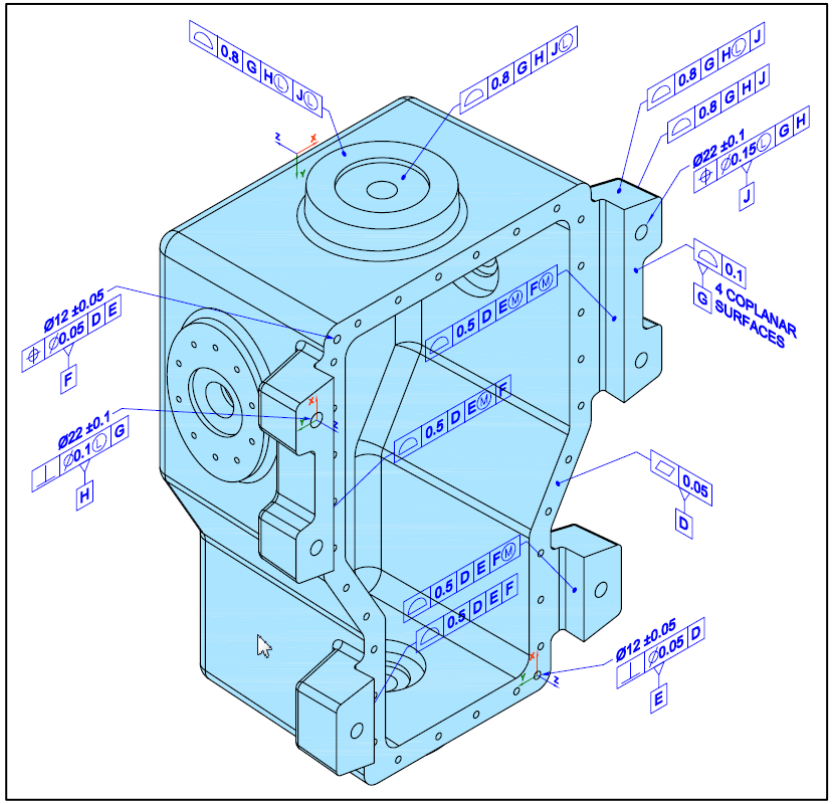

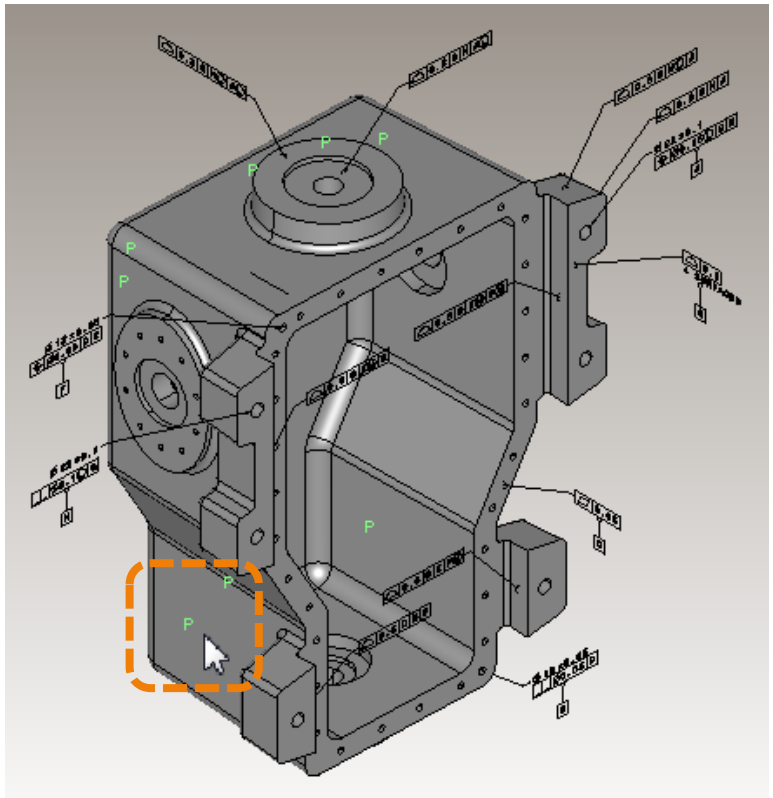

Because the datum targets for this model are not specified as visible in this saved view, then their associated supplemental geometry points should not be visible.

Return to Index

TranscenData

CAD System Presentation Limitations for Saved View Structure

Return to Index

Presentation Limitation

Saved View Structure:
View cannot contain annotations on different planes

Test Case

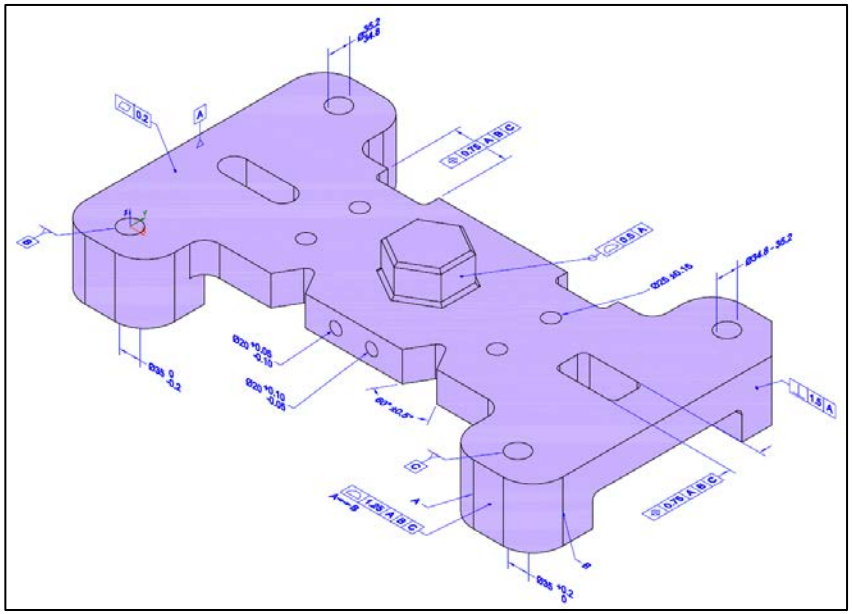

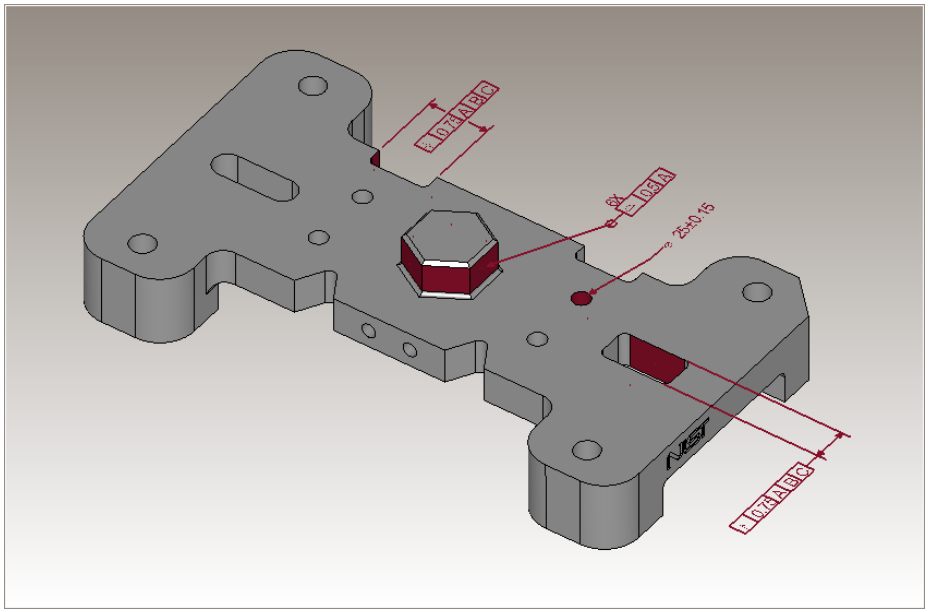

The PMI views in this system are limited to annotations with the same view and reading directions. The specified saved view has annotations with multiple view and reading directions.

Return to Index

CAD System Presentation Limitations for Saved View Frustum

Return to Index

Saved View Frustum: View camera position not defined

Presentation Limitation

Test Case

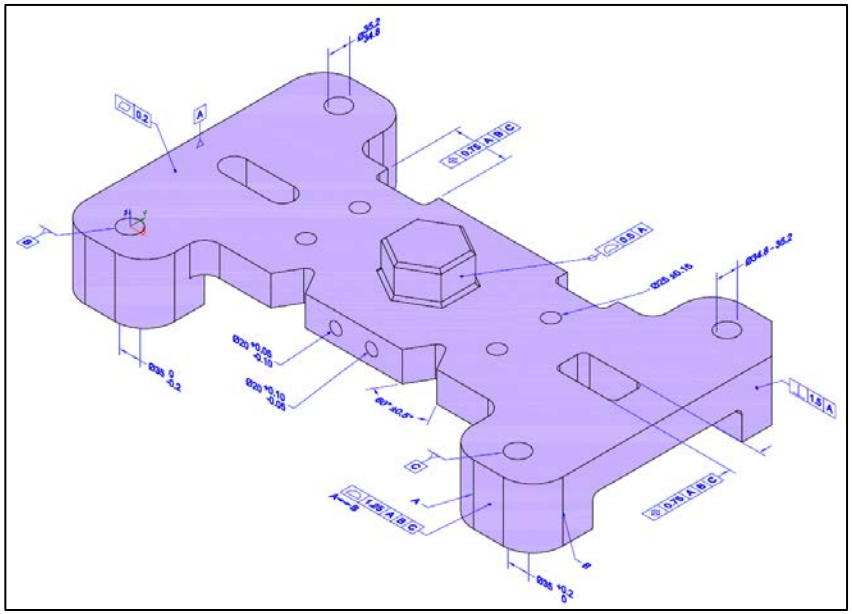

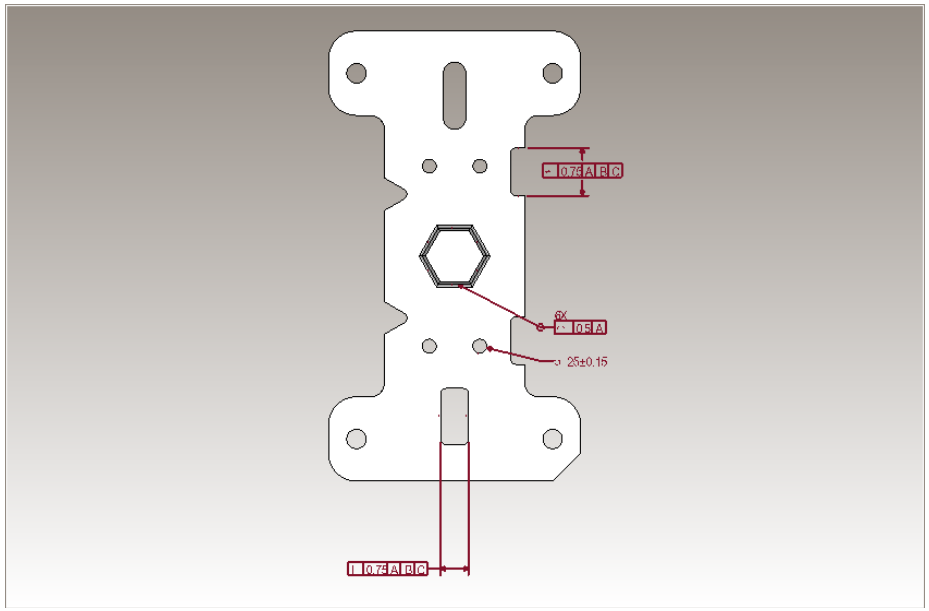

Each saved view in the test case has a specified camera position (view direction and zoom level). This system is unable to store a camera position in its PMI view definition.

Return to Index

TranscenData