ITI TranscenData

YOUR CENTRAL SOURCE FOR DATA EXCHANGE

NIST MBE PMI Validation & Conformance Testing CTC-05 Model Translation Validation Results June 2015

Doug Cheney
CAD Validation Specialist
ITI TranscenData
Doug.Cheney@TranscenData.com

FOCUS INNOVATION CHALLENGE SOLUTION PARTNERSHIP INTEGRATION

www.TranscenData.com

Any mention of commercial products is for information only; it does not imply recommendation or endorsement by NIST.

NIST is Supporting the Discrete Part Manufacturing Industry for Long-term Growth

"Our strategic direction is the Model-Based Enterprise (MBE)"

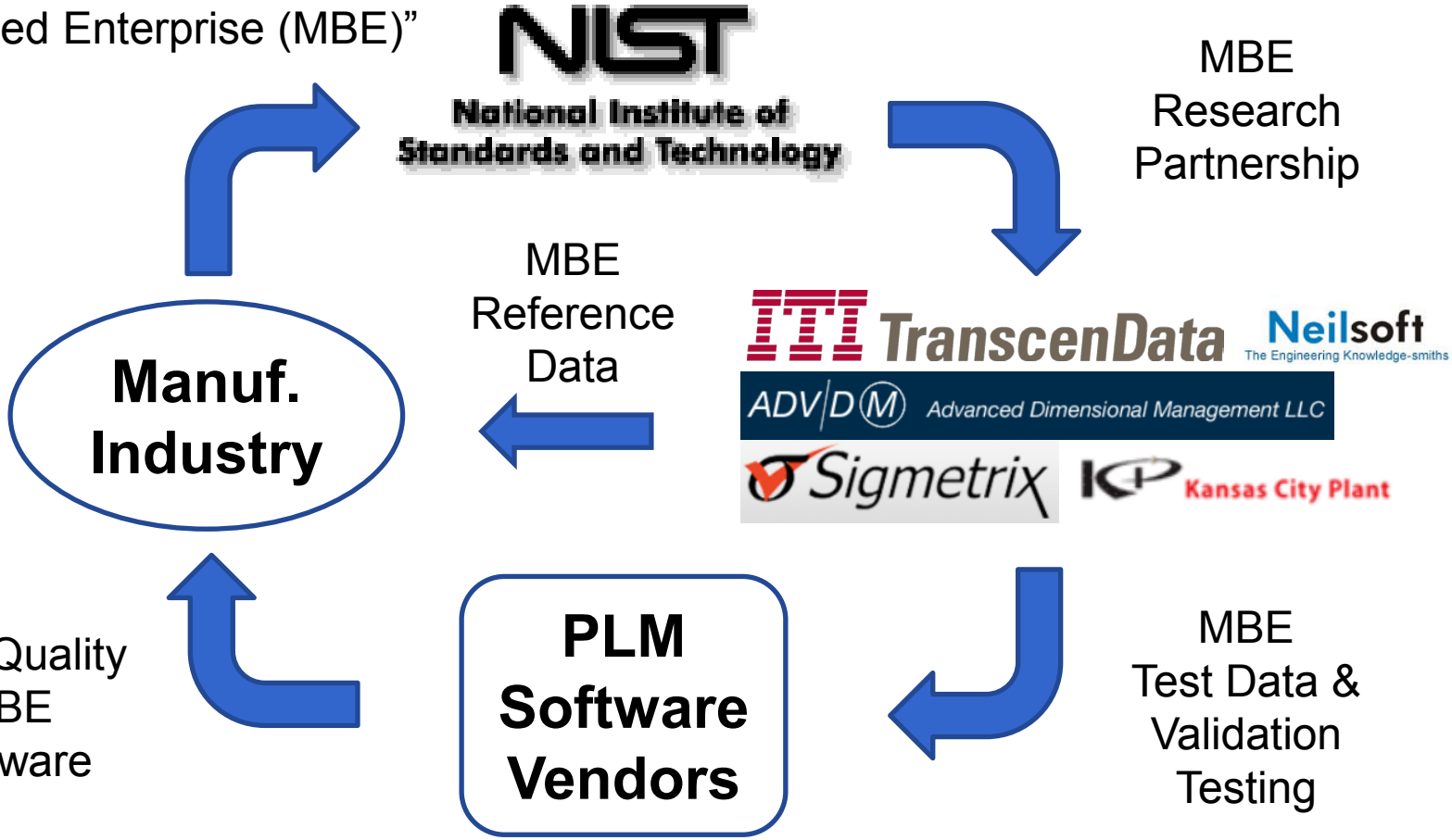

NIST MBE PMI Validation and Conformance Testing Program Objectives

Develop **test cases**,
test models and
software **algorithms** sufficient to
measure conformance of CAD systems and translators to American Society of Mechanical Engineers (ASME) **standards** for Product and Manufacturing Information (PMI).

ASME Y14.5	Dimensioning and Tolerancing
ASME Y14.41	Digital Product Data Definition Practices

Web site: http://go.usa.gov/mGVm

Conformance Testing Process

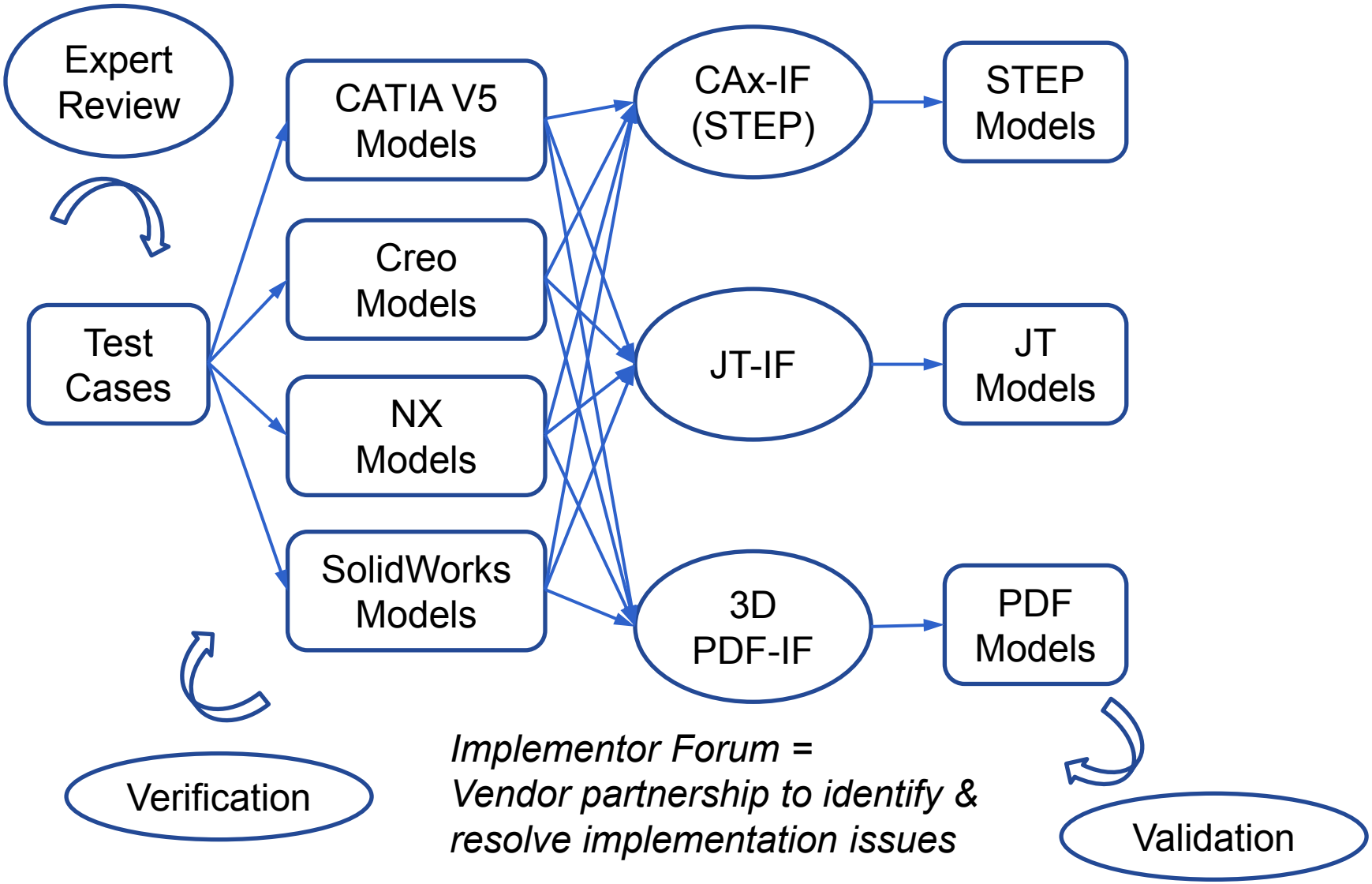

Implementor Forum = Vendor partnership to identify & resolve implementation issues

Conformance Testing Terminology

PMI element: An annotation, coordinate system, model property, supplemental geometry entity, or saved view

Presentation: What the human user sees (Visual consumption)

Representation: What the downstream software receives (Automated consumption)

Verification: How well each PMI element is modeled (CAD system capability)

Validation: How well each PMI element is translated (Translator capability)

ITI TranscenData

Selected Combined Test Case (CTC 05) and Models

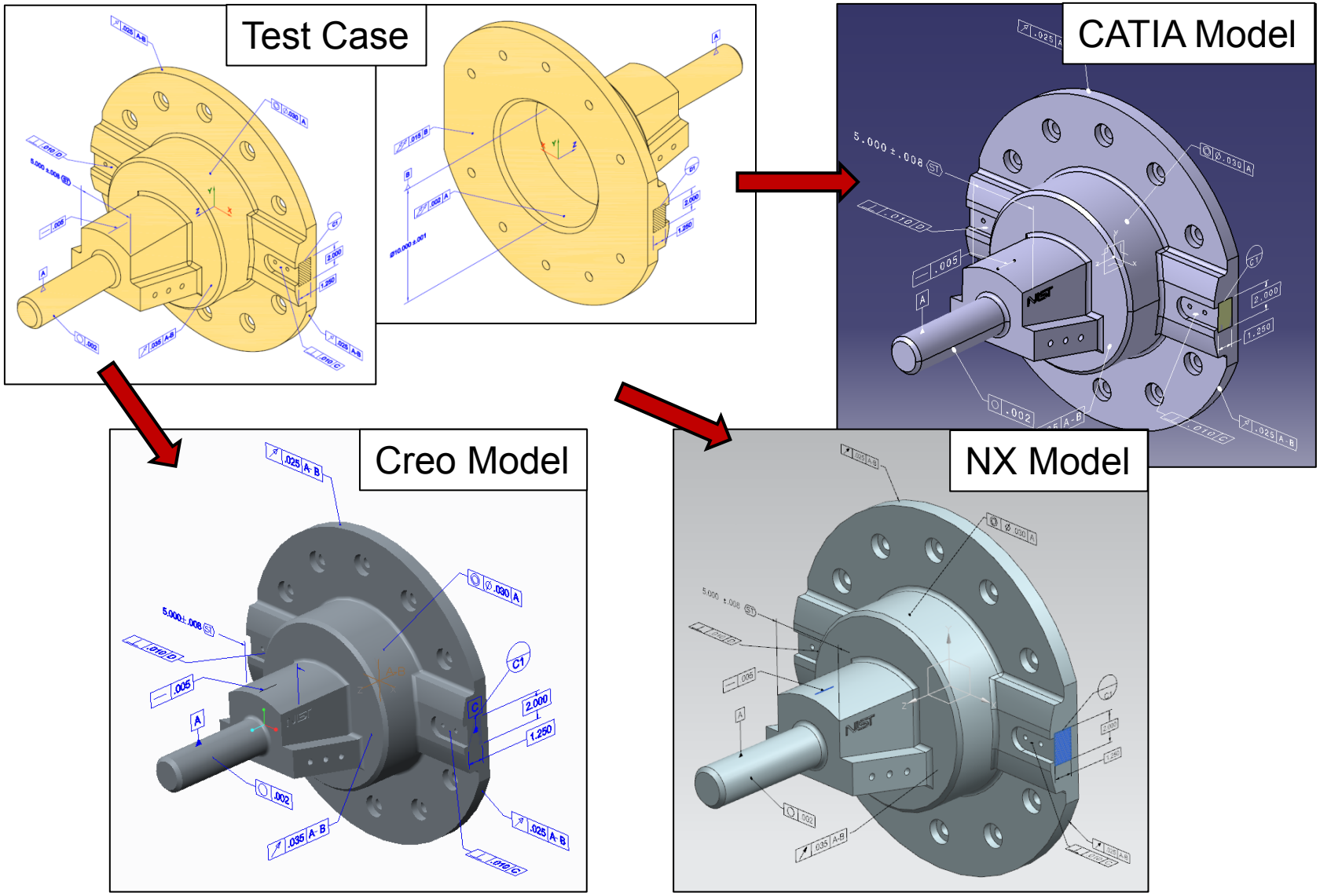

ITI TranscenData

Test Case and Test Model Selection Considerations

- Representative PMI elements
  - Datums: datum feature symbols and datum target symbols
  - Dimensions: basic, bidirectional, statistical, diameter
  - Tolerances: multiple geometric types and datum reference frames
  - Coordinate system: compound datum reference frame
  - Supplemental Geometry: target area and direction curve
  - Views: View-specific annotation and supplemental geometry visibility
- Representative translations
  - 10 – 13 per native format (CATIA V5 R21, Creo 2.0, NX 8.0)
  - 11 – 12 per neutral format (STEP AP203/242, JT XT BREP, PDF/PRC)
  - 35 total translations
- Representative vendor participation
  - 3 PLM vendors
  - 8 third-party vendors

ITI TranscenData

Validation Testing Methodology

- Each PMI element in a translated model is matched with the corresponding element in the corresponding native model.
- The representation and presentation data are compared between each pair of matched PMI elements.
- Each significant difference, that would impeded visual or automated consumption, is categorized as a presentation or representation validation issue, respectively.
- Each issue is grouped by PMI element type and impact (removed, changed, or added).
- An example of each kind of issue is documented in this presentation.
- The following slide indexes (underlined) these examples.

ITI TranscenData

Testing Considerations

- SolidWorks was not included as a native format since only 2 translations (to PDF) were provided by the vendors.
- Each translation was initially validated to determine if all element types were included. If not, the vendor was given the opportunity to resubmit it (using better configuration options).
- A detailed validation report for each translated model, highlighting each representation/presentation issue, was delivered to the translation vendor.
- Many of the translations were produced using pre-release translation software.
- When an element was added/removed, it was counted as both representation and presentation added/removed.
- Added percentages were capped at 100%.

ITI TranscenData

Validation Issues (and index to examples)

Representation Issue

- Annotation removed
- Annotation changed
- Annotation added
- Coordinate system removed
- Coordinate system changed
- Coordinate system added
- Product geometry removed
- Product geometry changed
- Product geometry added
- Supplemental geometry removed
- Supplemental geometry changed
- Supplemental geometry added
- Model property removed
- Model property changed
- Model property added

Presentation Issue

- Annotation removed
- Annotation changed
- Annotation added
- Coordinate system removed
- Coordinate system changed
- Coordinate system added
- Product geometry removed
- Product geometry changed
- Product geometry added
- Supplemental geometry removed
- Supplemental geometry changed
- Supplemental geometry added
- Saved view removed
- Saved view changed
- Saved view added

PMI Constructs Test Case Drawings and Models

If an issue type is not underlined, no differences were found in this dataset.

ITI TranscenData

Validation Issues NOT Found in This Dataset

- Coordinate system representation
  - Location or orientation changed
- Coordinate system presentation
  - Color or name changed
- Product geometry representation
  - Face removed or added
- Product geometry presentation
  - Face visibility or color changed
- Supplemental geometry representation
  - Surface/curve location or orientation changed
  - Point location changed
- Supplemental geometry presentation
  - Surface color changed
- Model property representation
  - Name or value changed

ITI TranscenData

Negligible Annotation Differences (Ignored)

- Layout (if visible in view)
- Text font, size, spacing (if readable)
- Leader line routing (if not intersecting any text)
- Arrowhead style (if well-formed)

ITI TranscenData

Translation Capability Measurement Methodology

- All translated model entities were subtotaled by element type and format.
- All validation issues were subtotaled by category, element type, impact, and format.
- Each issue subtotal was divided by the corresponding element subtotal to calculate a percentage.
- The max percentage within each group was charted
- For example: 11 STEP models contained 242 annotations of which 44 had parameter changes (18%). The percentages of other kinds of annotation representation changes were lower for STEP so 18% is the percentage shown on the chart.
- The following slides show these statistics for this dataset.
- The names of the native CAD systems are generalized.

ITI TranscenData

Translated Element Counts by Native and Neutral Format

Model Translations	Format			
Test Model	STEP	JT	PDF	Grand Total
CAD A				
	5	3	4	12
CAD B				
	4	5	4	13
CAD C				
	2	4	4	10
Grand Total	**11**	**12**	**12**	**35**

Element Translations by				
Element Type	CAD	STEP	JT	PDF
Annotations		**242**	**264**	**264**
	CAD A	110	66	88
	CAD B	88	110	88
	CAD C	44	88	88
Coordinate Systems		**11**	**12**	**12**
	CAD A	5	3	4
	CAD B	4	5	4
	CAD C	2	4	4
Model Properties		**33**	**36**	**36**
	CAD A	15	9	12
	CAD B	12	15	12
	CAD C	6	12	12
Product Geometry		**2012**	**2320**	**2272**
	CAD A	780	468	624
	CAD B	816	1020	816
	CAD C	416	832	832
Saved Views		**22**	**24**	**24**
	CAD A	10	6	8
	CAD B	8	10	8
	CAD C	4	8	8
Supplemental Geometry		**79**	**86**	**92**
	CAD A	45	27	36
	CAD B	12	15	12
	CAD C	22	44	44

TranscenData

Annotation
Validation Summary by Category and Neutral Format

Validation Issue	Element Percentages		
	STEP	JT	PDF
Annotations			
Representation			
Removed	**6%**	**3%**	**2%**
Annotation removed	6%	3%	2%
Changed	**18%**	**45%**	**50%**
Annotation edge association changed	17%	6%	17%
Annotation face association changed	6%	13%	12%
Annotation parameter changed	18%	45%	50%
Added	**0%**	**51%**	**0%**
Annotation added	0%	51%	0%
Presentation			
Removed	**8%**	**10%**	**3%**
Annotation hidden	8%	10%	3%
Changed	**53%**	**33%**	**32%**
Annotation color changed	0%	0%	16%
Annotation lines changed	13%	6%	6%
Annotation location changed	1%	1%	0%
Annotation name changed	53%	33%	32%
Annotation orientation changed	0%	0%	1%
Annotation text changed	12%	17%	6%
Added	**2%**	**58%**	**3%**
Annotation shown	2%	58%	3%

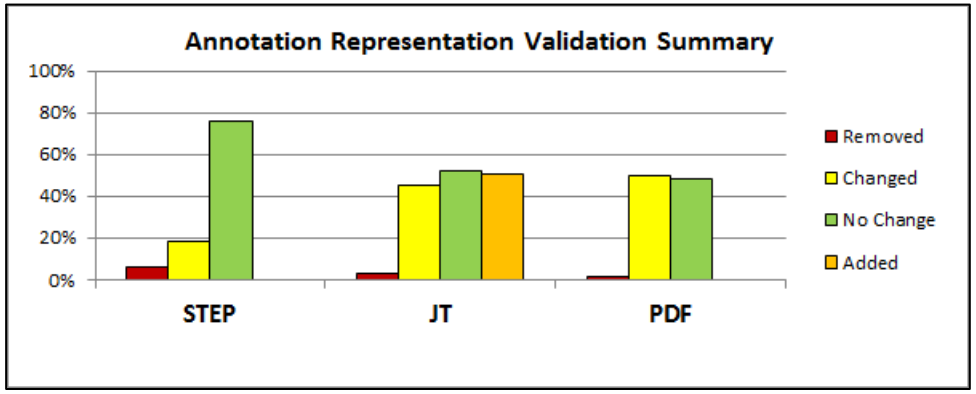

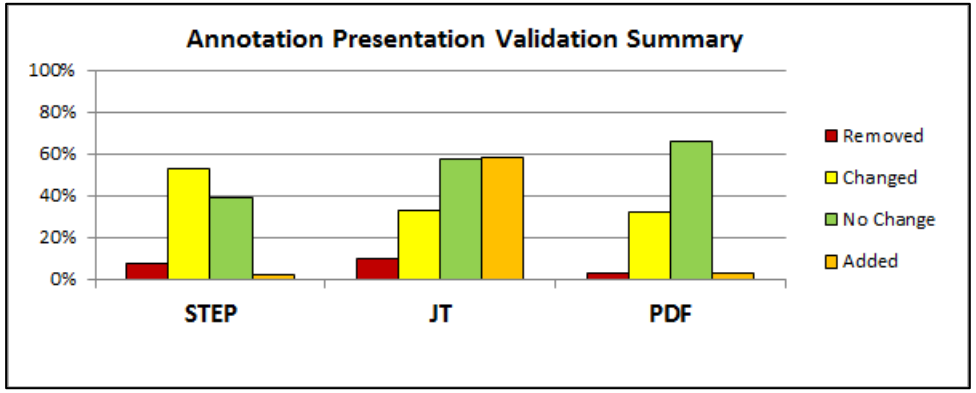

TranscenData

Coordinate System
Validation Summary by Category and Neutral Format

Validation Issue	Element Percentages		
	STEP	JT	PDF
Coordinate Systems			
Representation			
Removed	**55%**	**17%**	**75%**
Coordinate system removed	55%	17%	75%
Presentation			
Removed	**55%**	**67%**	**75%**
Coordinate system hidden	55%	67%	75%

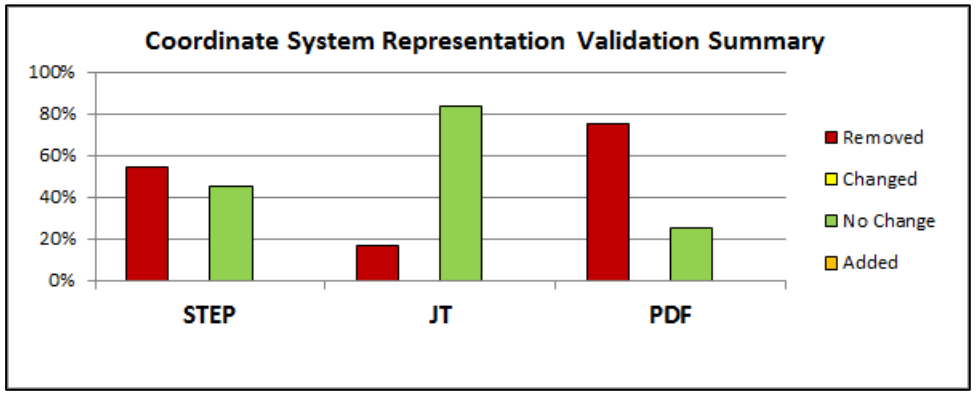

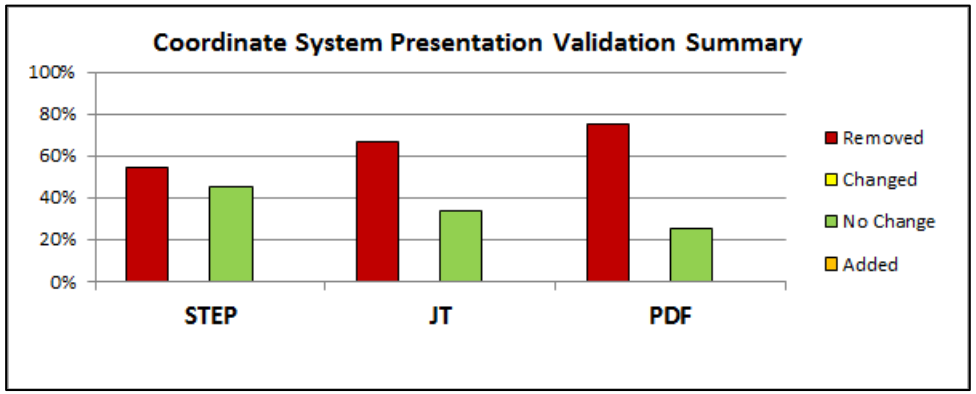

Product Geometry
Validation Summary by Category and Neutral Format

Validation Issue	Element Percentages		
	STEP	JT	PDF
Product Geometry			
Representation			
Changed	0%	0%	0%
Face geometry changed	0%	0%	0%
Face topology changed	0%	0%	0%
Presentation			
Changed	0%	0%	13%
Face tessellation inaccuracy	0%	0%	13%

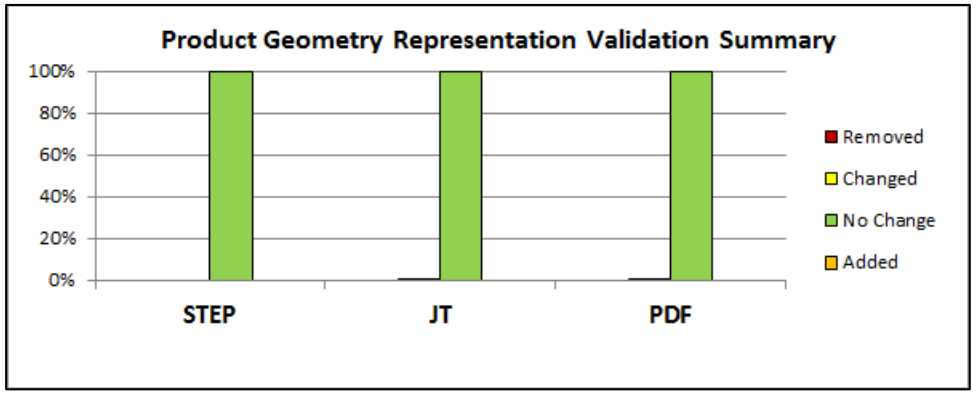

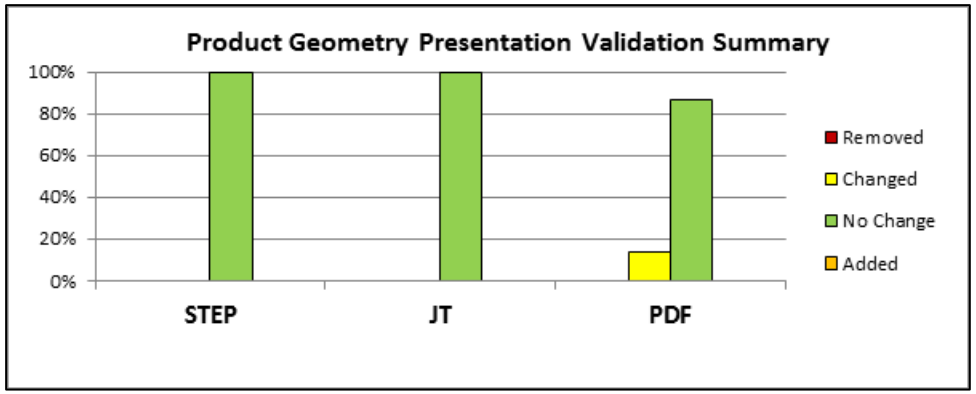

Supplemental Geometry Validation Summary by Category and Neutral Format

Validation Issue	Element Percentages		
	STEP	JT	PDF
Supplemental Geometry			
Representation			
Removed	**25%**	**21%**	**11%**
Curve removed	25%	21%	11%
Point removed	0%	3%	1%
Surface removed	5%	5%	7%
Added	**100%**	**21%**	**100%**
Curve added	100%	21%	100%
Point added	71%	0%	36%
Surface added	8%	0%	0%
Presentation			
Removed	**25%**	**21%**	**12%**
Curve hidden	25%	21%	12%
Point hidden	0%	3%	1%
Surface hidden	5%	5%	7%
Changed	**23%**	**0%**	**11%**
Curve color changed	23%	0%	11%
Added	**100%**	**49%**	**100%**
Curve shown	100%	49%	100%
Point shown	71%	0%	36%
Surface shown	9%	10%	2%

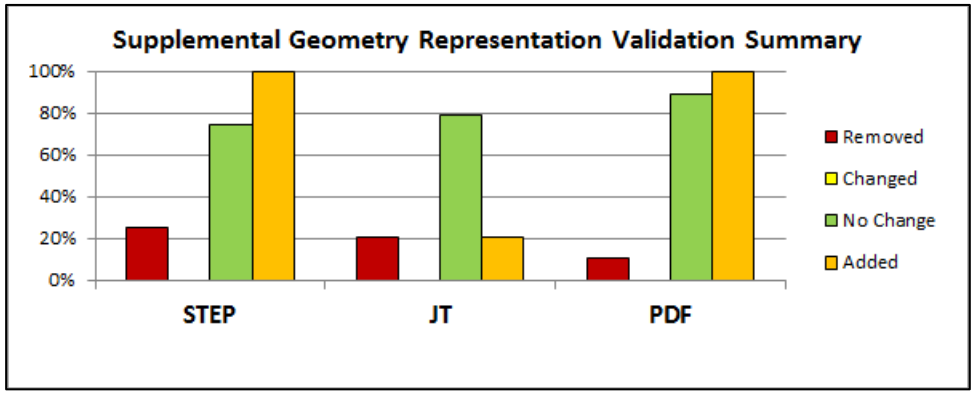

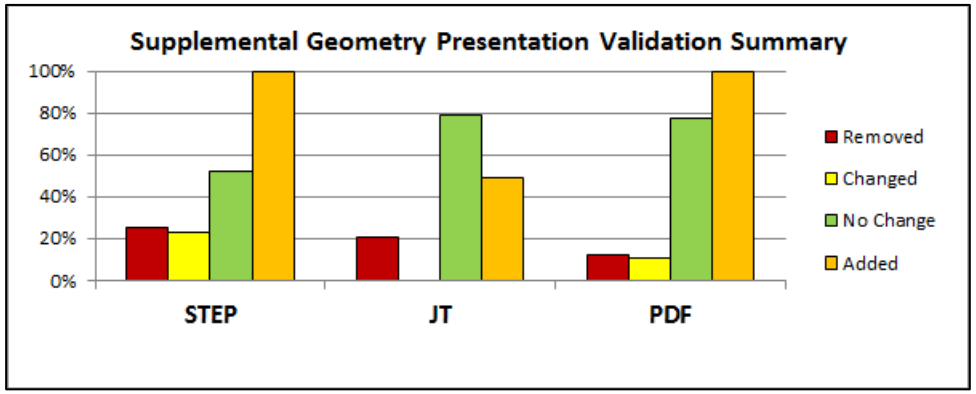

Model Property and Saved View Validation Summary by Category and Neutral Format

Validation Issue	Element Percentages		
	STEP	JT	PDF
Model Properties			
Representation			
Removed	**55%**	**44%**	**58%**
Property removed	55%	44%	58%

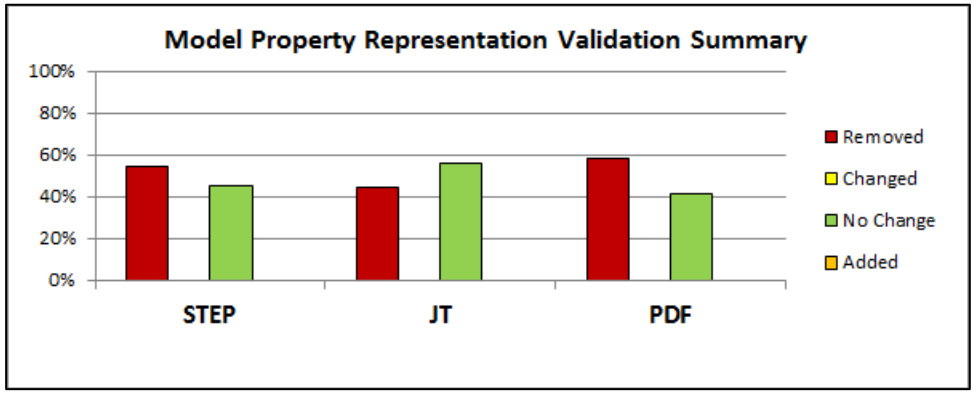

Validation Issue	Element Percentages		
	STEP	JT	PDF
Saved Views			
Presentation			
Removed	**73%**	**17%**	**0%**
View removed	73%	17%	0%
Changed	**9%**	**25%**	**8%**
View frustum changed	9%	25%	8%
View name changed	9%	0%	0%
Added	**0%**	**83%**	**17%**
View added	0%	83%	17%

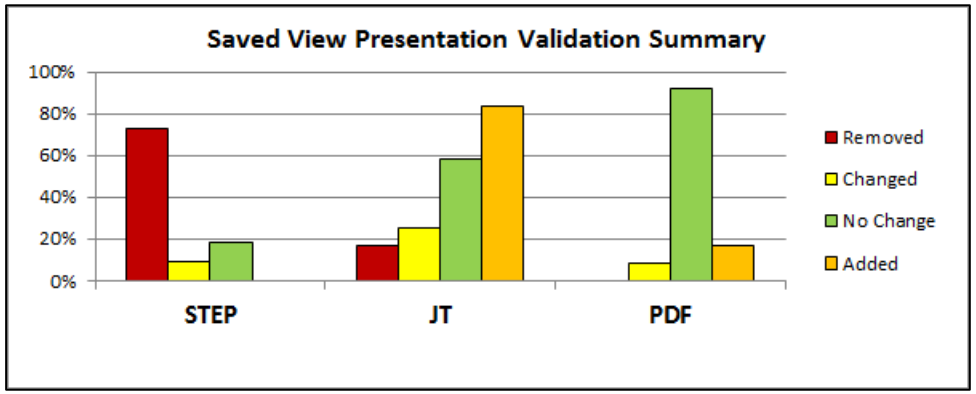

Summary

- Overall
  - Every translation had both representation and presentation issues, each on more than one type of PMI element
- Annotations
  - STEP achieved 76% representation, but only 39% presentation
  - PDF achieved only 48% representation, but reached 66% presentation
  - JT fell in between with 52% representation, 57% presentation and about 50% extraneous data added
- Coordinate Systems
  - JT achieved 83% representation, but only 33% presentation
  - STEP achieved only 45% representation, 45% presentation
  - PDF achieved only 25% representation, 25% presentation

ITI TranscenData

Summary (cont.)

- Product Geometry
  - All formats achieved nearly 100% representation
  - STEP and JT achieved 100% presentation
  - PDF fell slightly short with 87% presentation
- Supplemental Geometry
  - All formats achieved between 75% and 89% representation
  - JT and PDF achieved about 80% presentation, STEP only 52%
  - STEP and PDF added significant extraneous data
- Saved Views
  - PDF achieved 92% presentation
  - JT achieved 58% presentation, but added significant extraneous data
  - STEP only achieved 18% presentation
- Model Properties
  - All formats only achieved between 42% and 56% representation

ITI TranscenData

Validation Issues (and index to examples)

Representation Issue

- Annotation removed
- Annotation changed
- Annotation added
- Coordinate system removed
- Coordinate system changed
- Coordinate system added
- Product geometry removed
- Product geometry changed
- Product geometry added
- Supplemental geometry removed
- Supplemental geometry changed
- Supplemental geometry added
- Model property removed
- Model property changed
- Model property added

Presentation Issue

- Annotation removed
- Annotation changed
- Annotation added
- Coordinate system removed
- Coordinate system changed
- Coordinate system added
- Product geometry removed
- Product geometry changed
- Product geometry added
- Supplemental geometry removed
- Supplemental geometry changed
- Supplemental geometry added
- Saved view removed
- Saved view changed
- Saved view added

PMI Constructs Test Case Drawings and Models

If an issue type is not underlined, no differences were found in this dataset.

ITI TranscenData

Translator Representation Issues for Annotation Removed

Return to Index

Annotation Removed

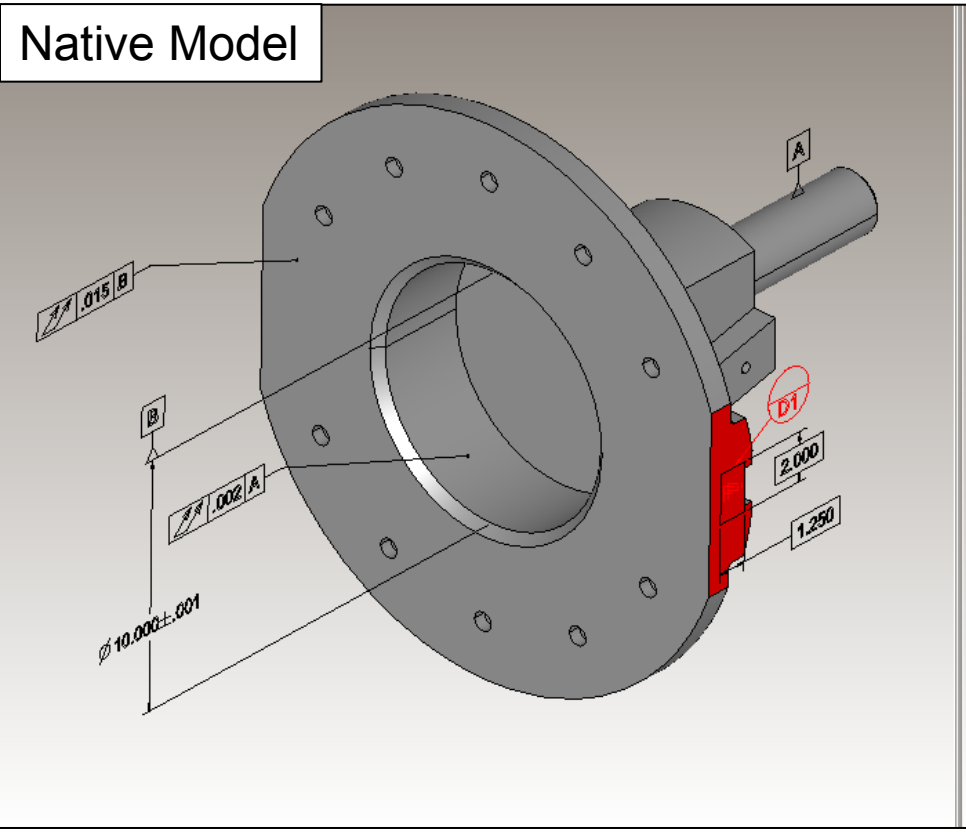

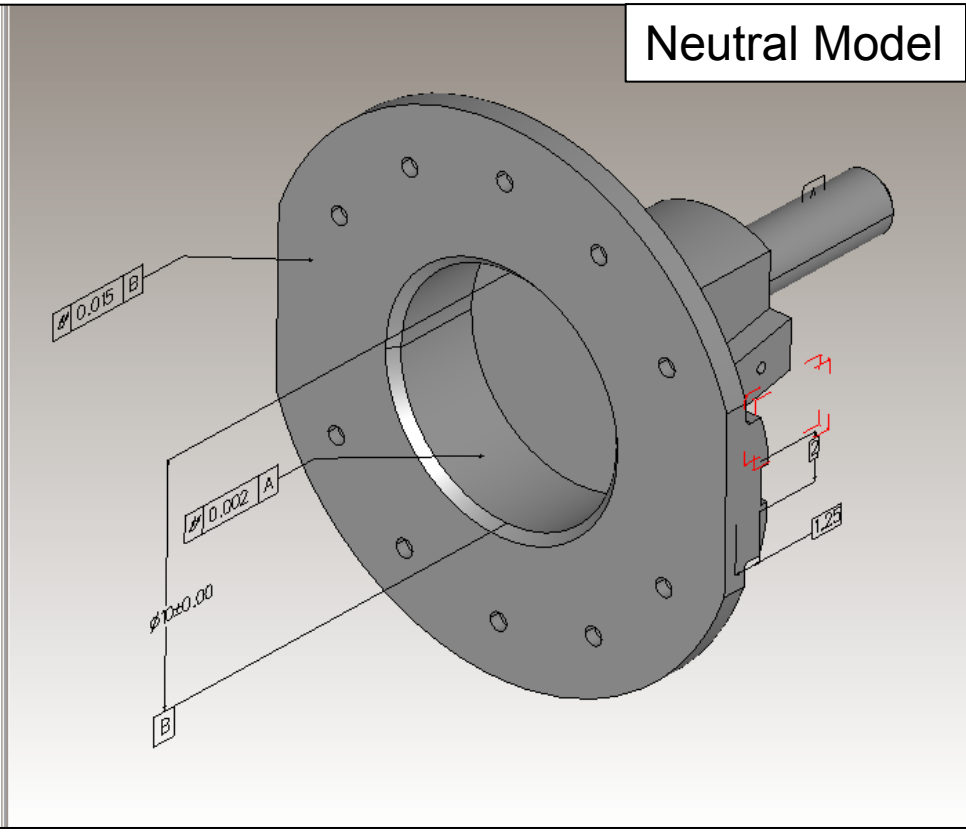

The definition of this datum target symbol was lost.

Return to Index

TranscenData

Translator Representation Issues for Annotation Changed

Return to Index

Annotation Edge Association Changed

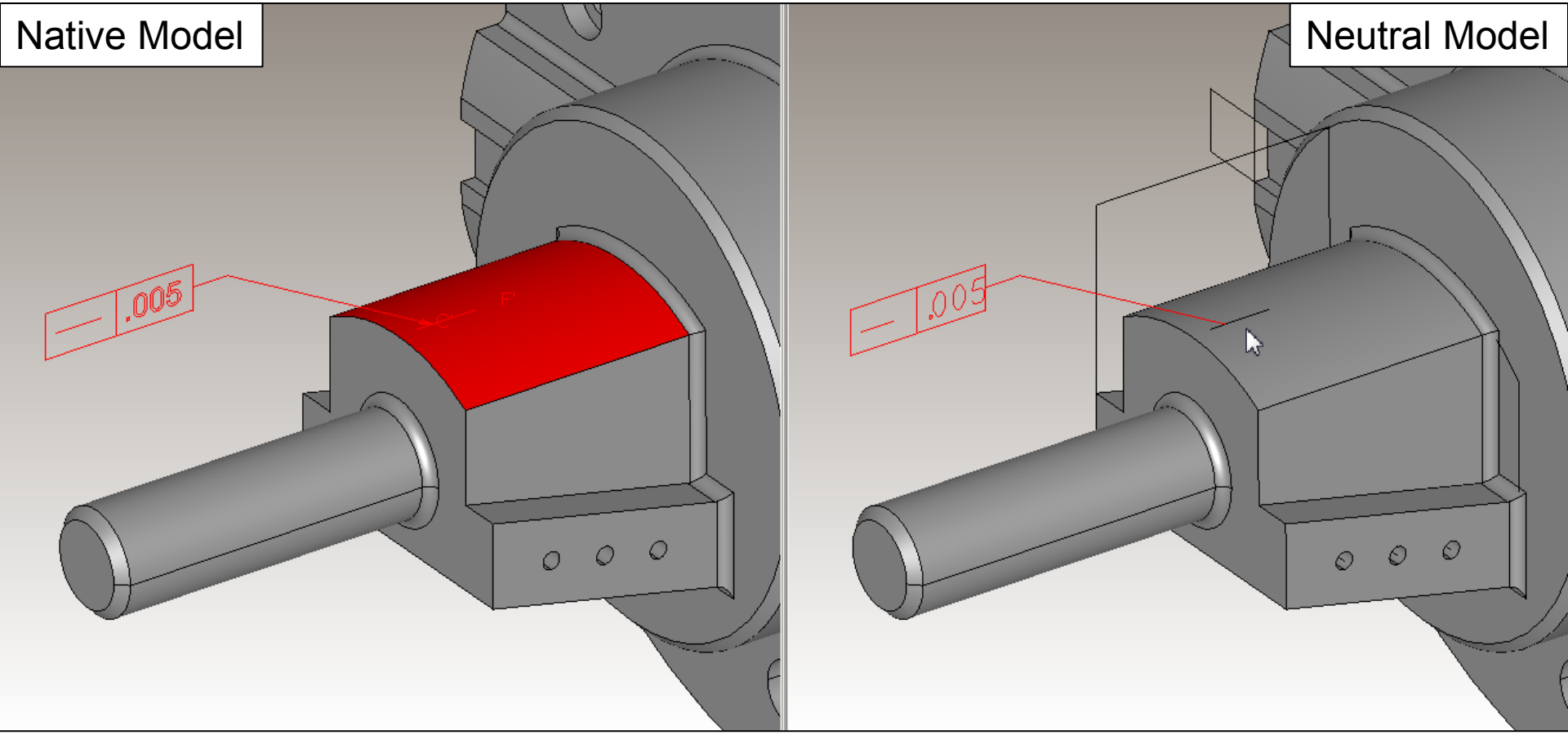

The associativity of this straightness tolerance with its represented line element was lost.

Return to Index

TranscenData

Annotation Face Association Changed

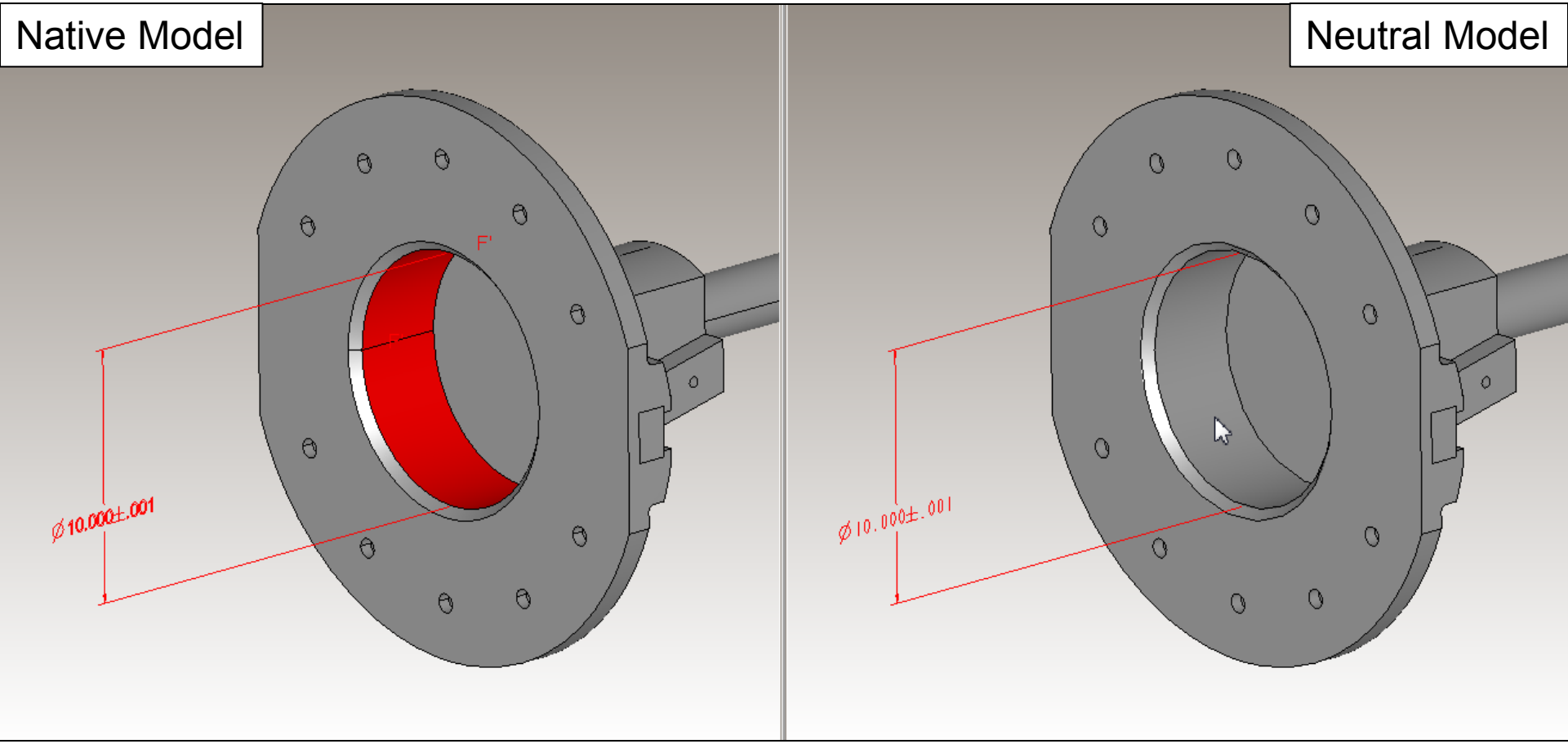

The associativity of this dimension with its faces was lost.

Return to Index

TranscenData

Annotation Face Association Changed

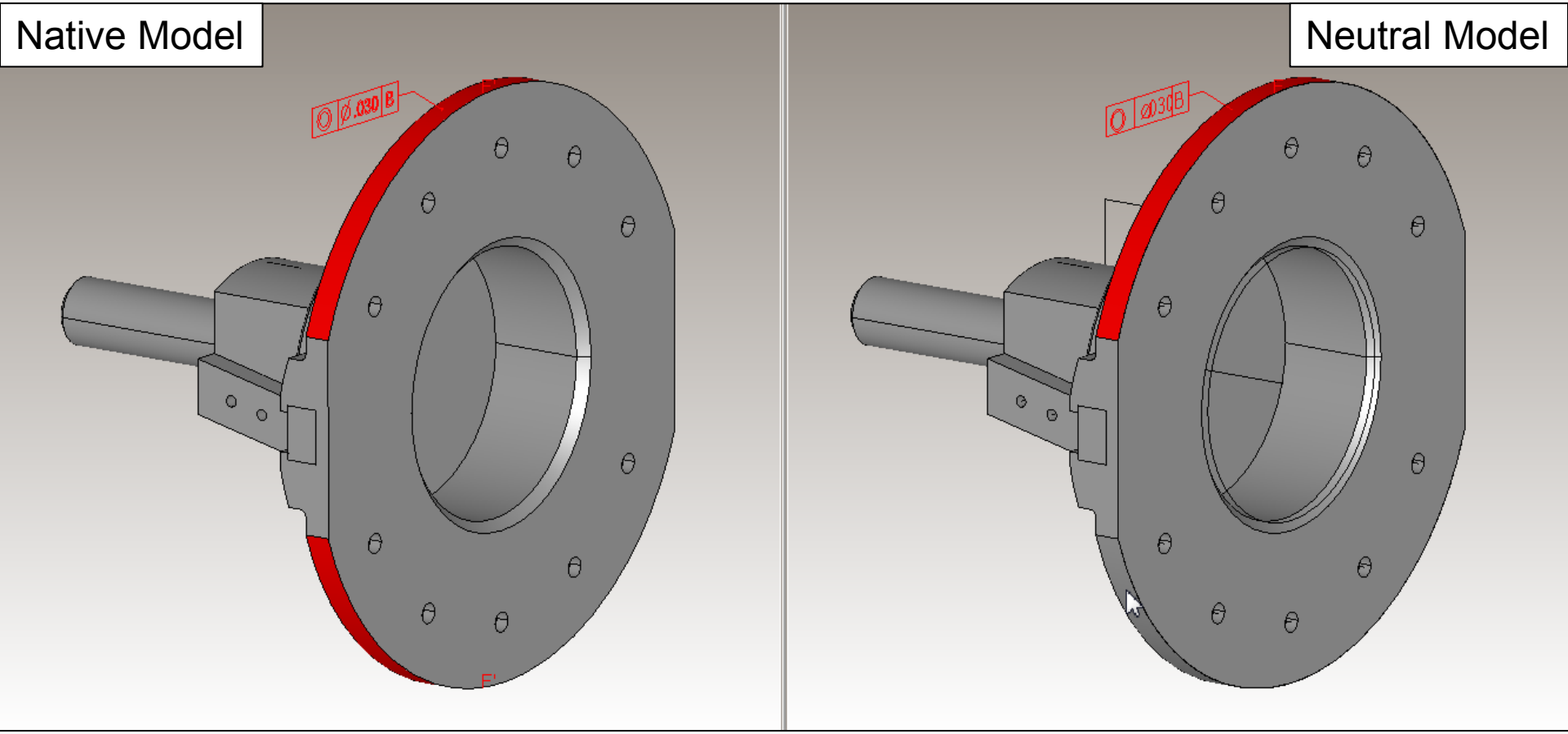

Part of the associativity of this feature control frame with its faces was lost.

Return to Index

Annotation Parameter Changed

Native Model

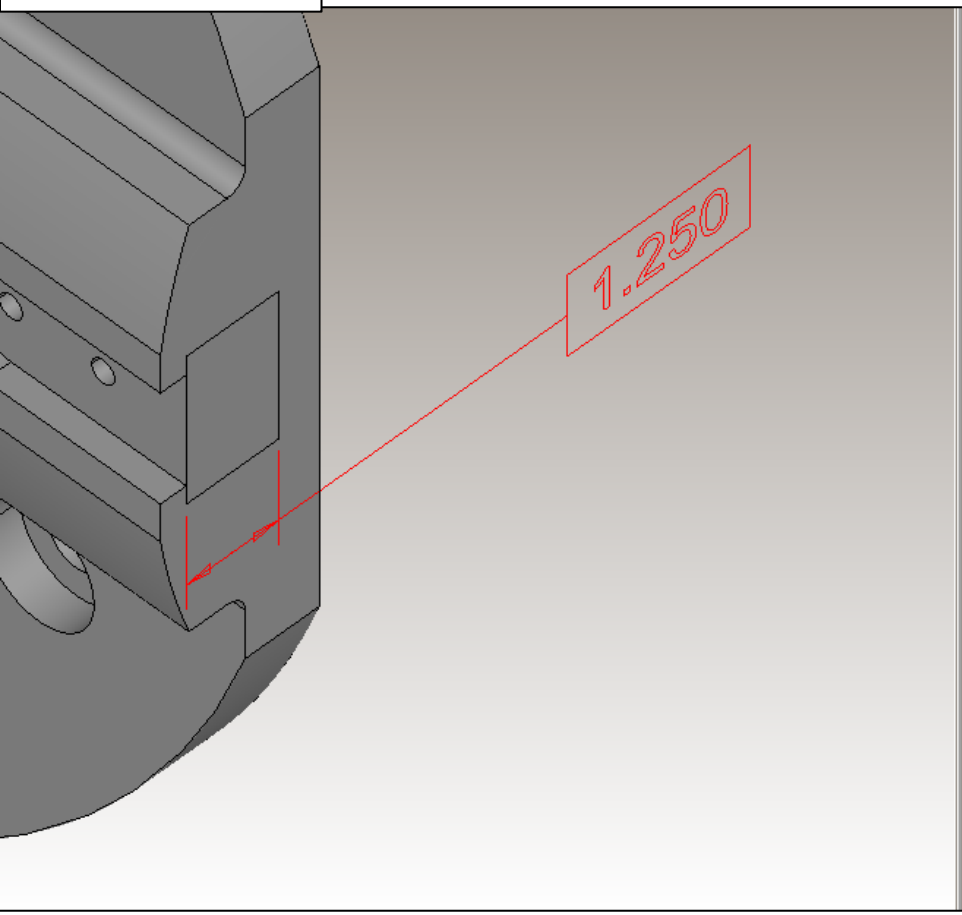

Neutral Model

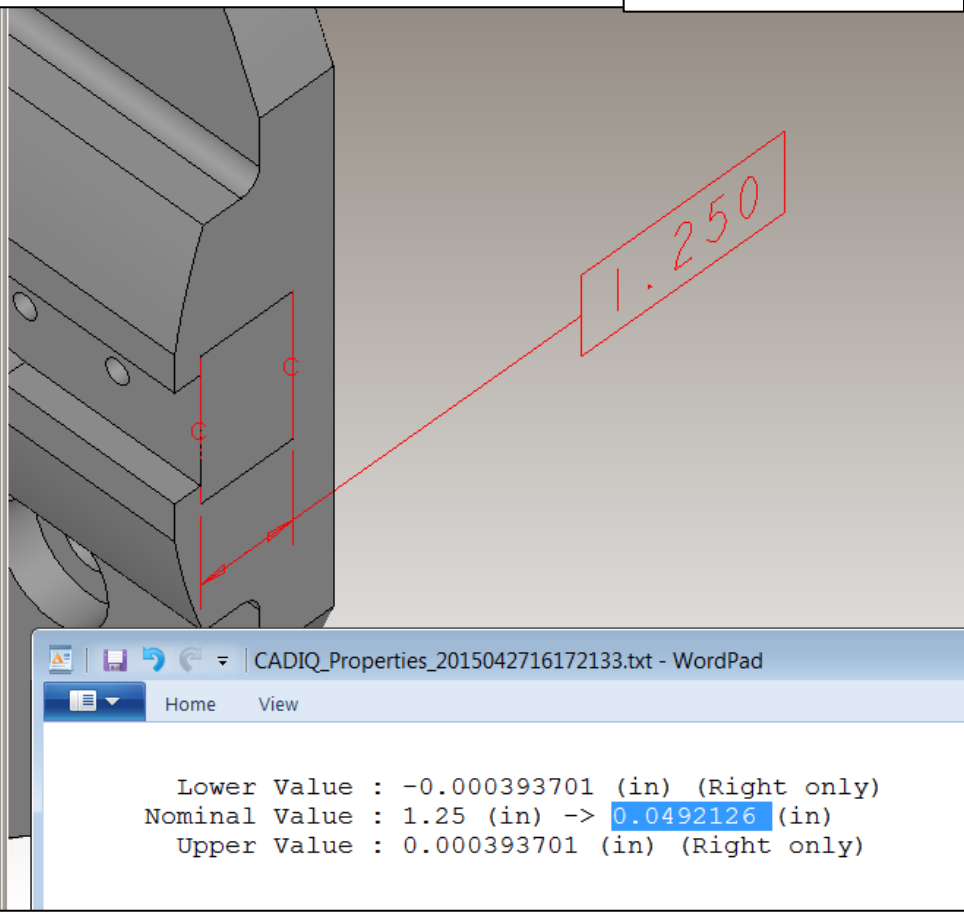

While the displayed text for this dimension is correct in the neutral model, the semantic (internal) value has changed.

Return to Index

TranscenData

Translator Representation Issues for Annotation Added

Return to Index

Annotation Added

Neutral Model

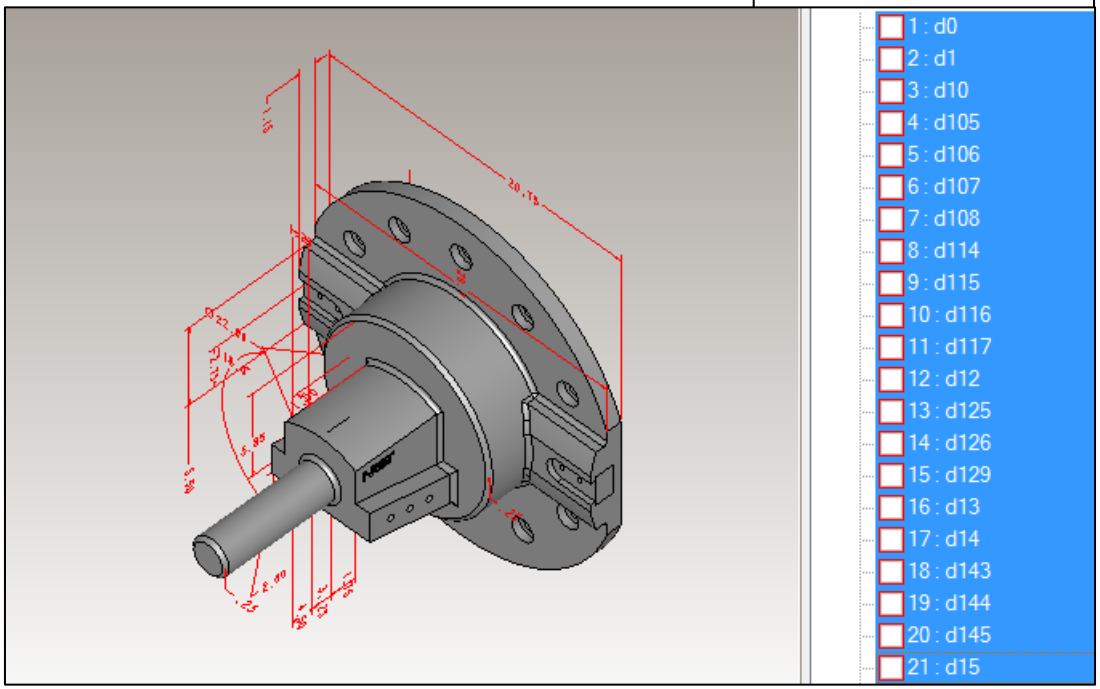

These “sketch” dimensions are defined in the native model but not visible in the MBD views. They were translated into the neutral model and made visible.

Return to Index

TranscenData

Translator Representation Issues for Coordinate System Removed

Return to Index

Coordinate System Removed

Native Model

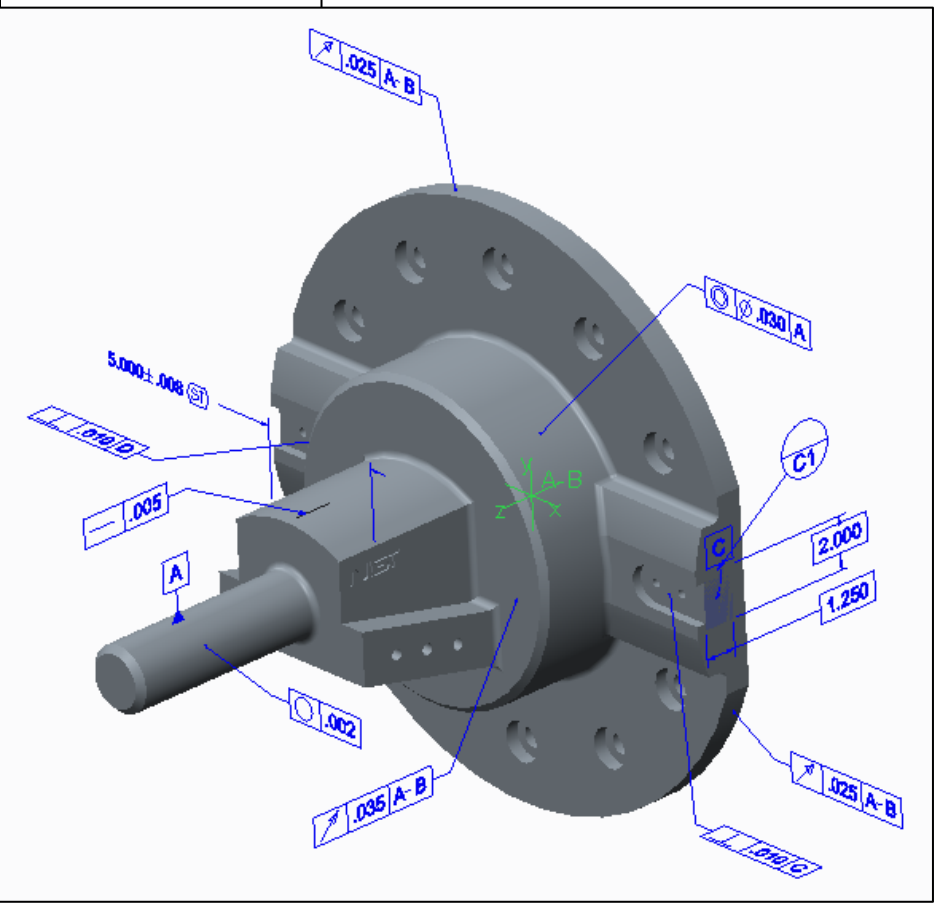

Neutral Model

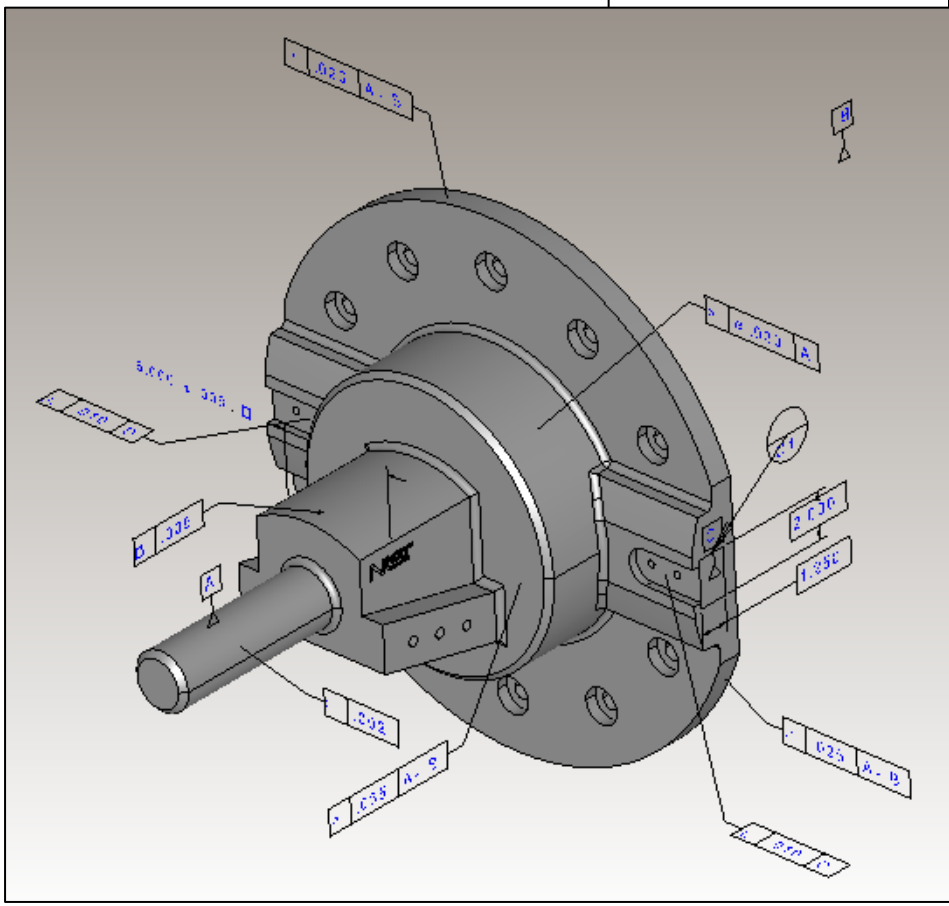

Coordinate system “A-B” is defined in the native model but not in the neutral model.

Return to Index

TranscenData

Translator Representation Issues for Product Geometry Changed

Return to Index

Face Geometry Changed

Native Model

Neutral Model

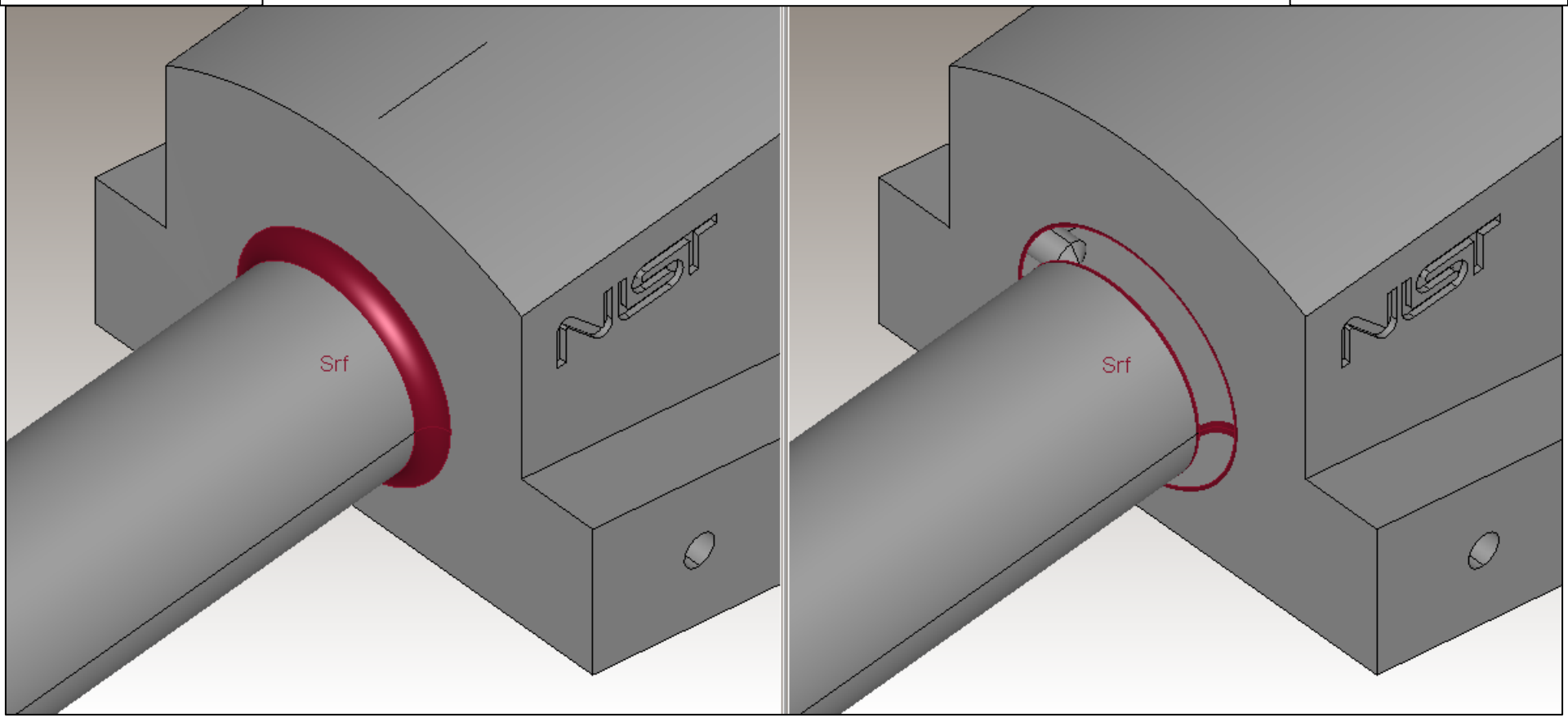

This fillet surface is not tessellated correctly in the neutral model (which intentionally only contains graphical geometry).

Return to Index

TranscenData

Face Topology Changed

Native Model

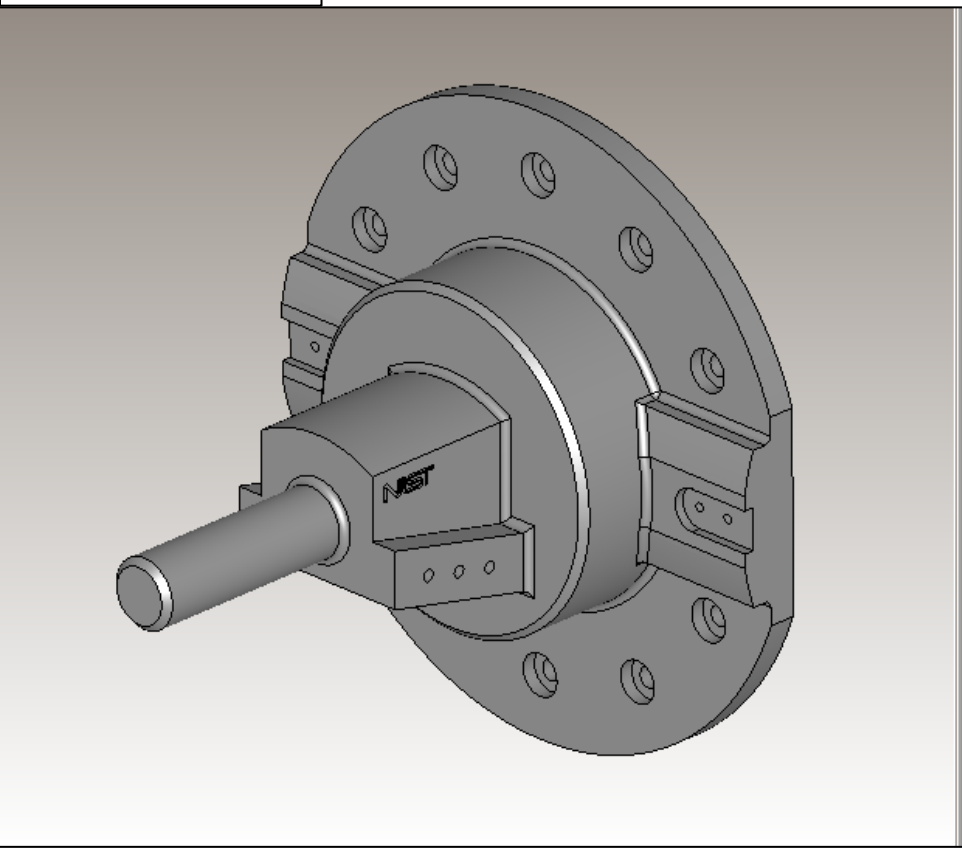

Neutral Model

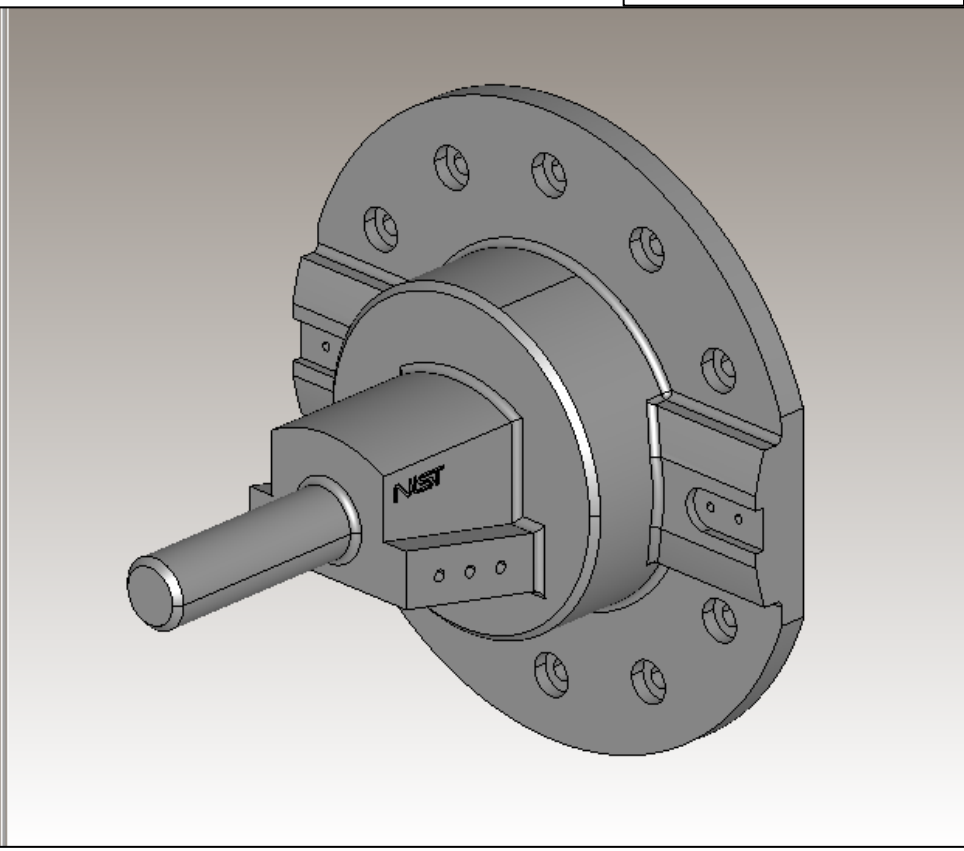

The native model is defined as a closed solid. The geometry in the neutral model was translated into an open shell.

Return to Index

Translator Representation Issues for Supplemental Geometry Removed

Return to Index

Curve Removed

Native Model

Neutral Model

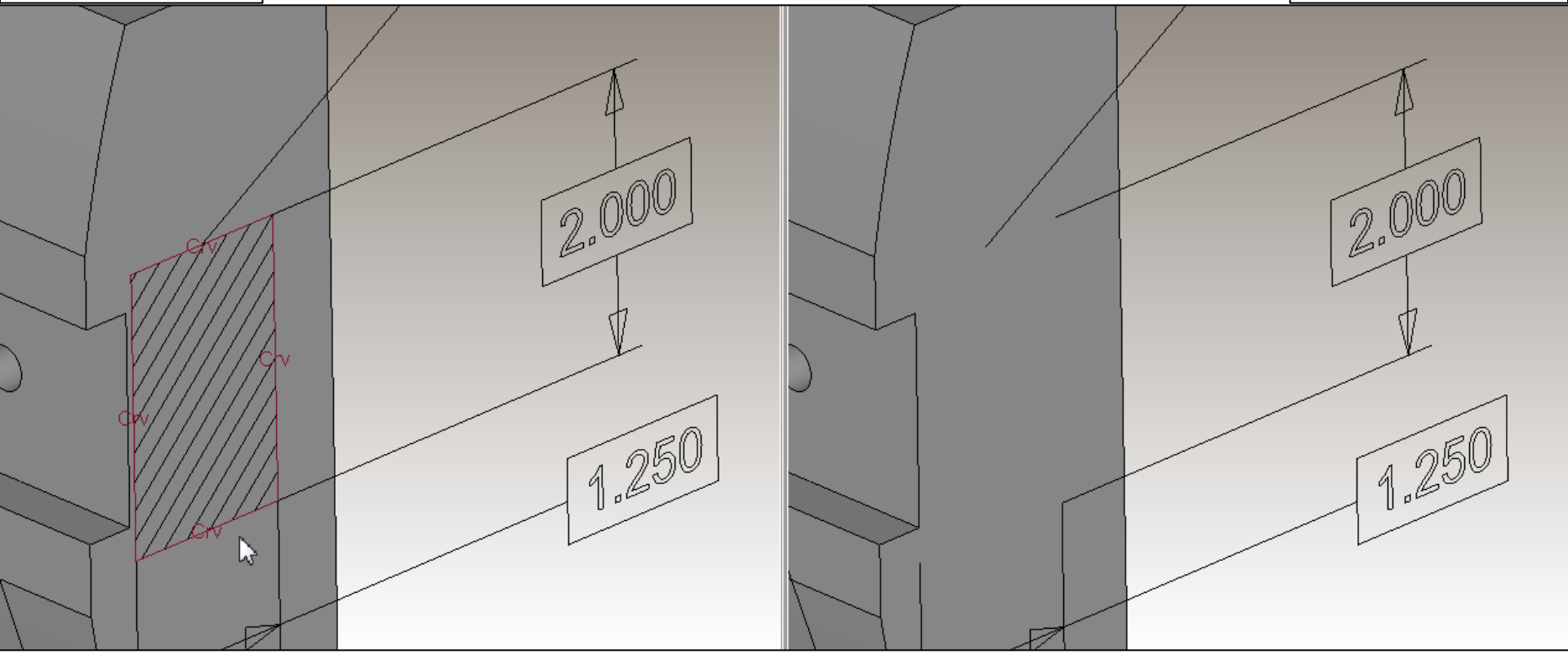

The boundary of this target area is defined with wireframe curves in the native model that were not translated into the neutral model.

Return to Index

TranscenData

Point Removed

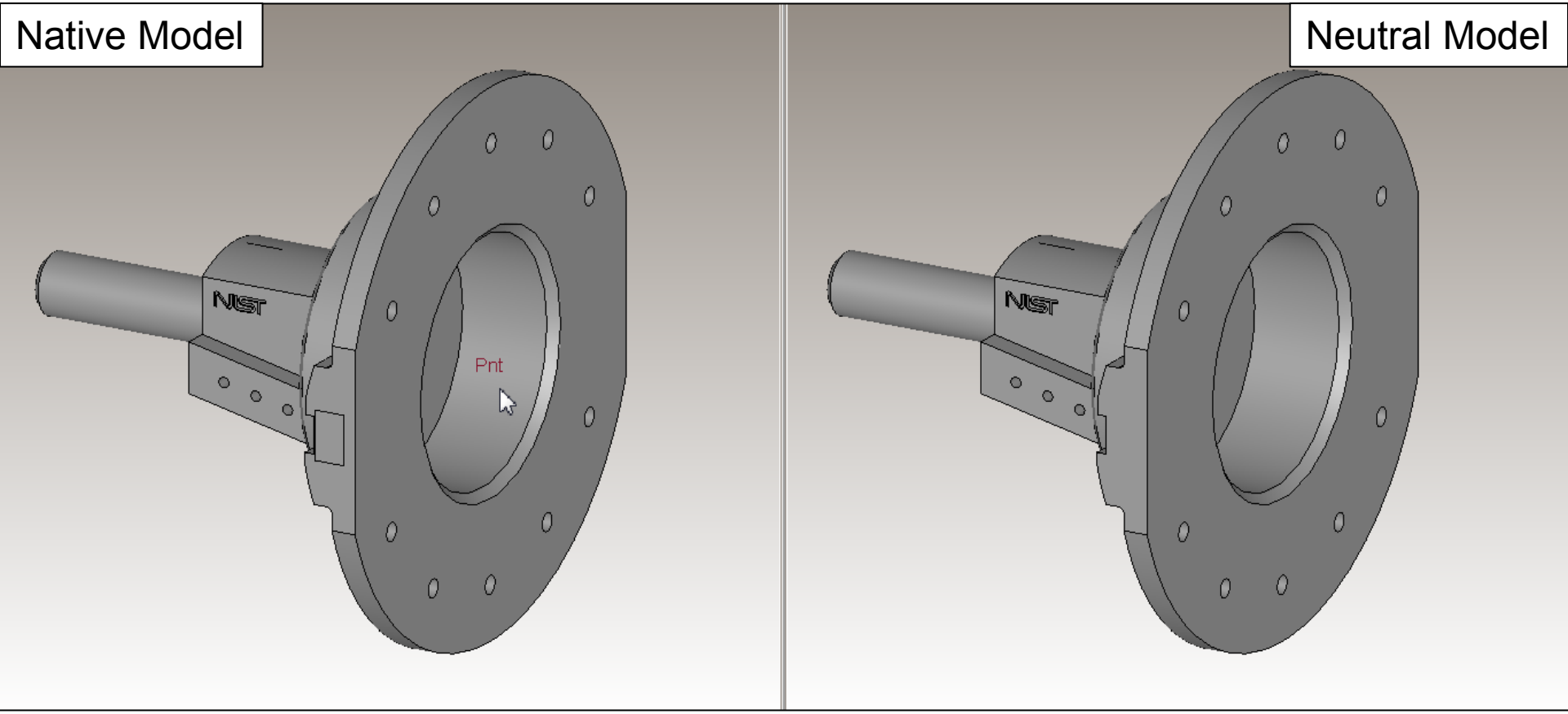

The origin point for the coordinate system of this model was not translated.

Return to Index

TranscenData

Surface Removed

Native Model

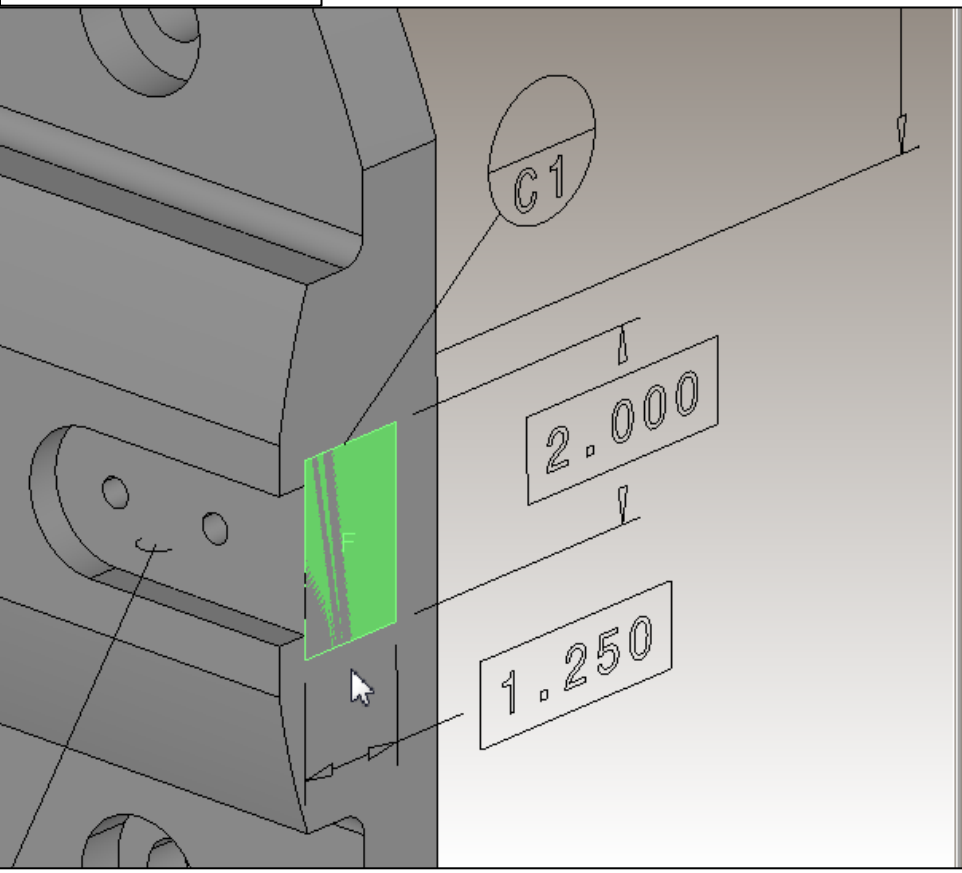

Neutral Model

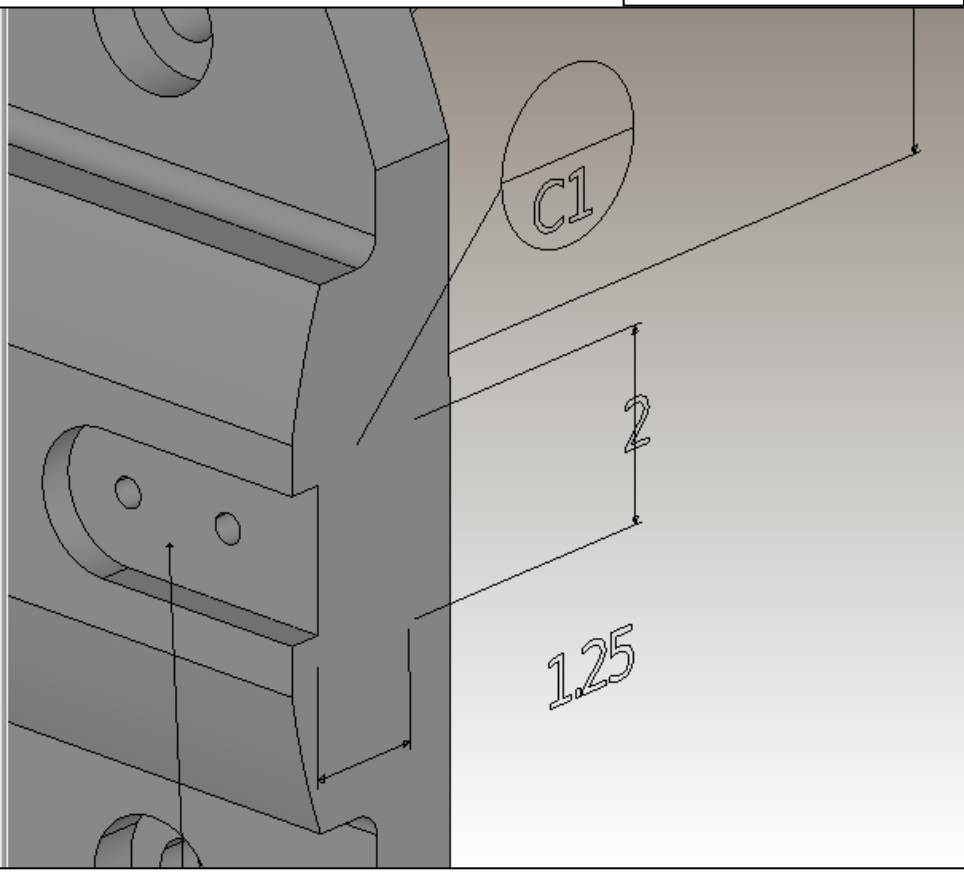

This target area is defined by a non-solid surface that was not translated into the neutral model.

Return to Index

TranscenData

Translator Representation Issues for Supplemental Geometry Added

Return to Index

Curve Added

Native Model

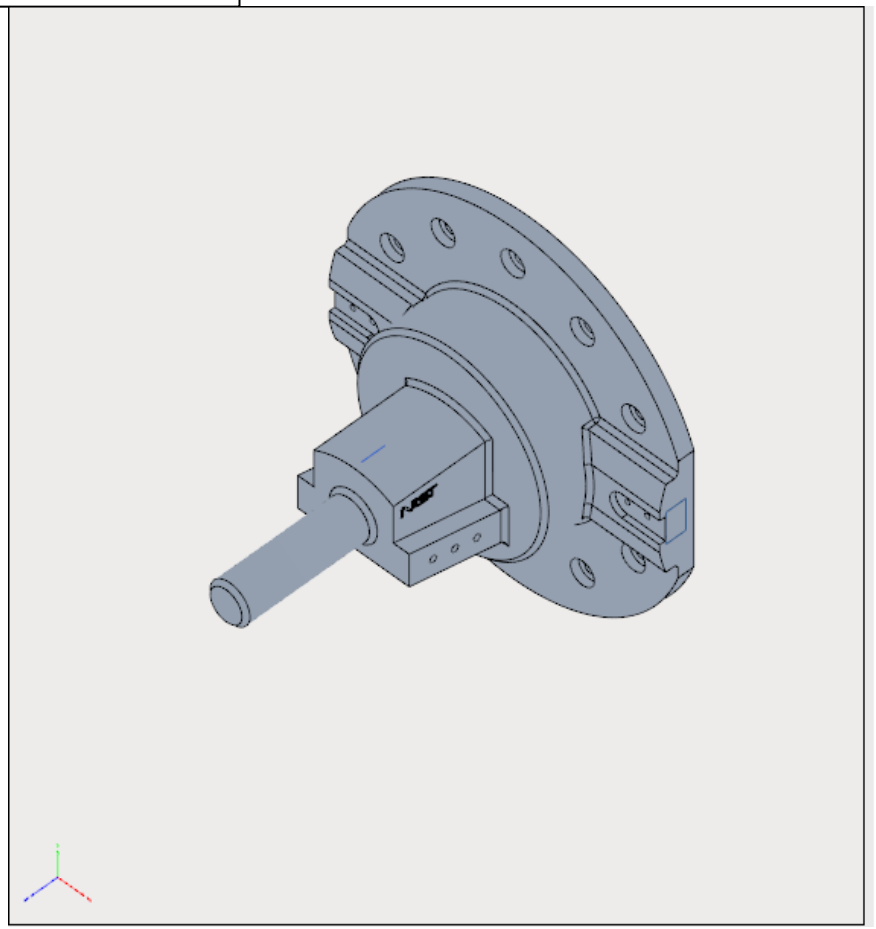

Neutral Model

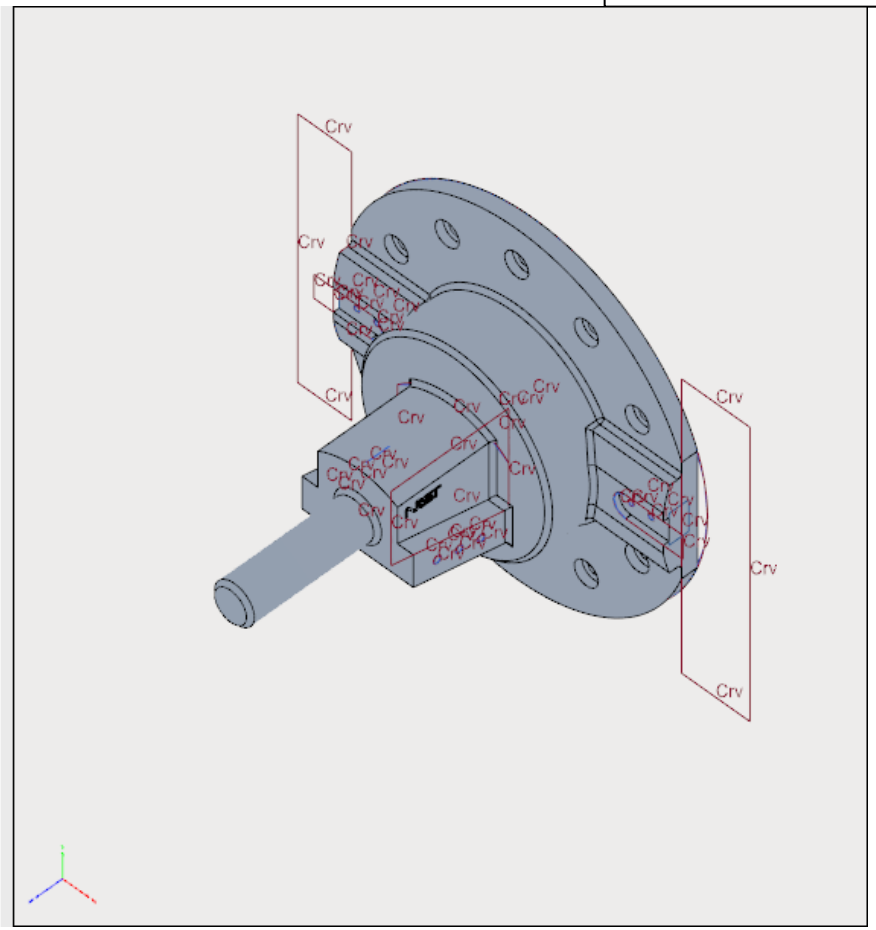

These “sketch” curves are defined in the native model but not visible in the MBD views. They were translated into the neutral model and made visible.

Return to Index

TranscenData

Point Added

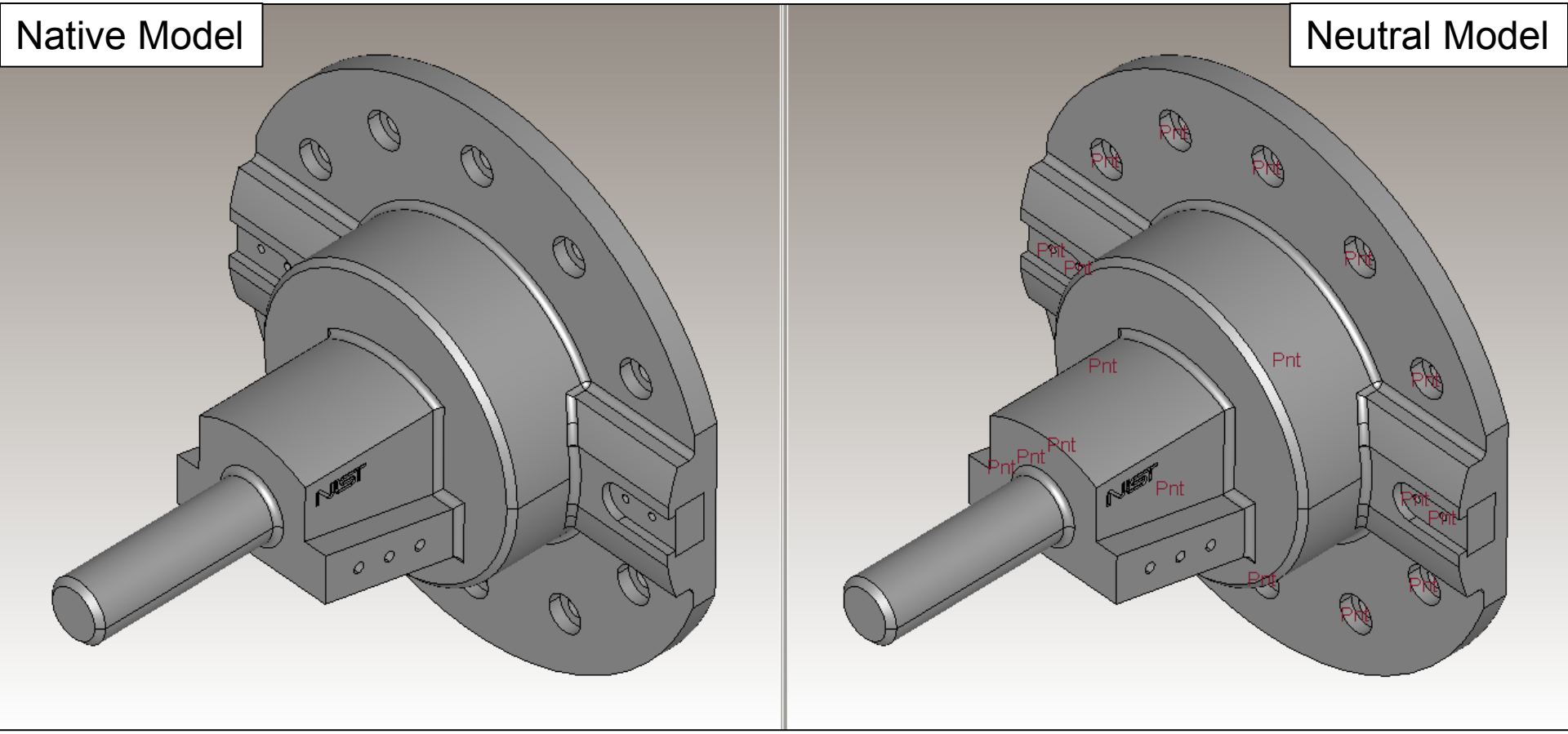

Several extraneous points were added to this model.

Return to Index

TranscenData

Surface Added

Native Model

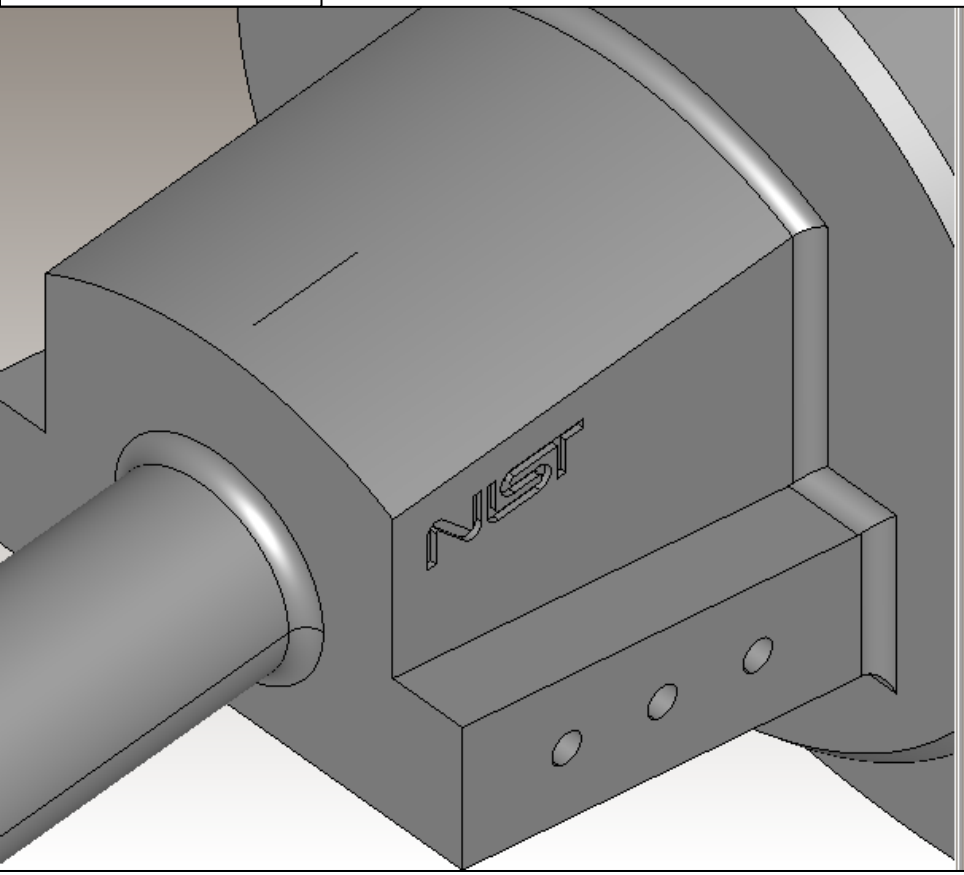

Neutral Model

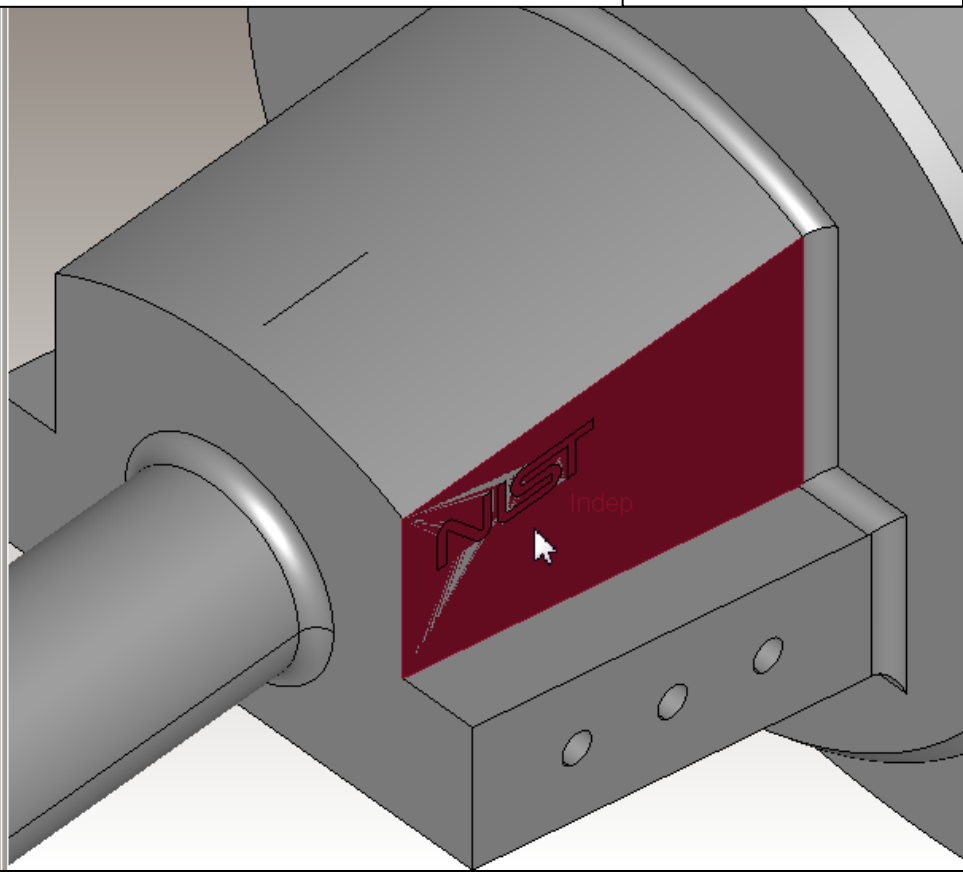

A non-solid surface, that overlays this face and its logo, was added into the translated model.

Return to Index

ITI TranscenData

Translator Representation Issues for Model Property Removed

Return to Index

Model Property Removed

Native Model

Neutral Model

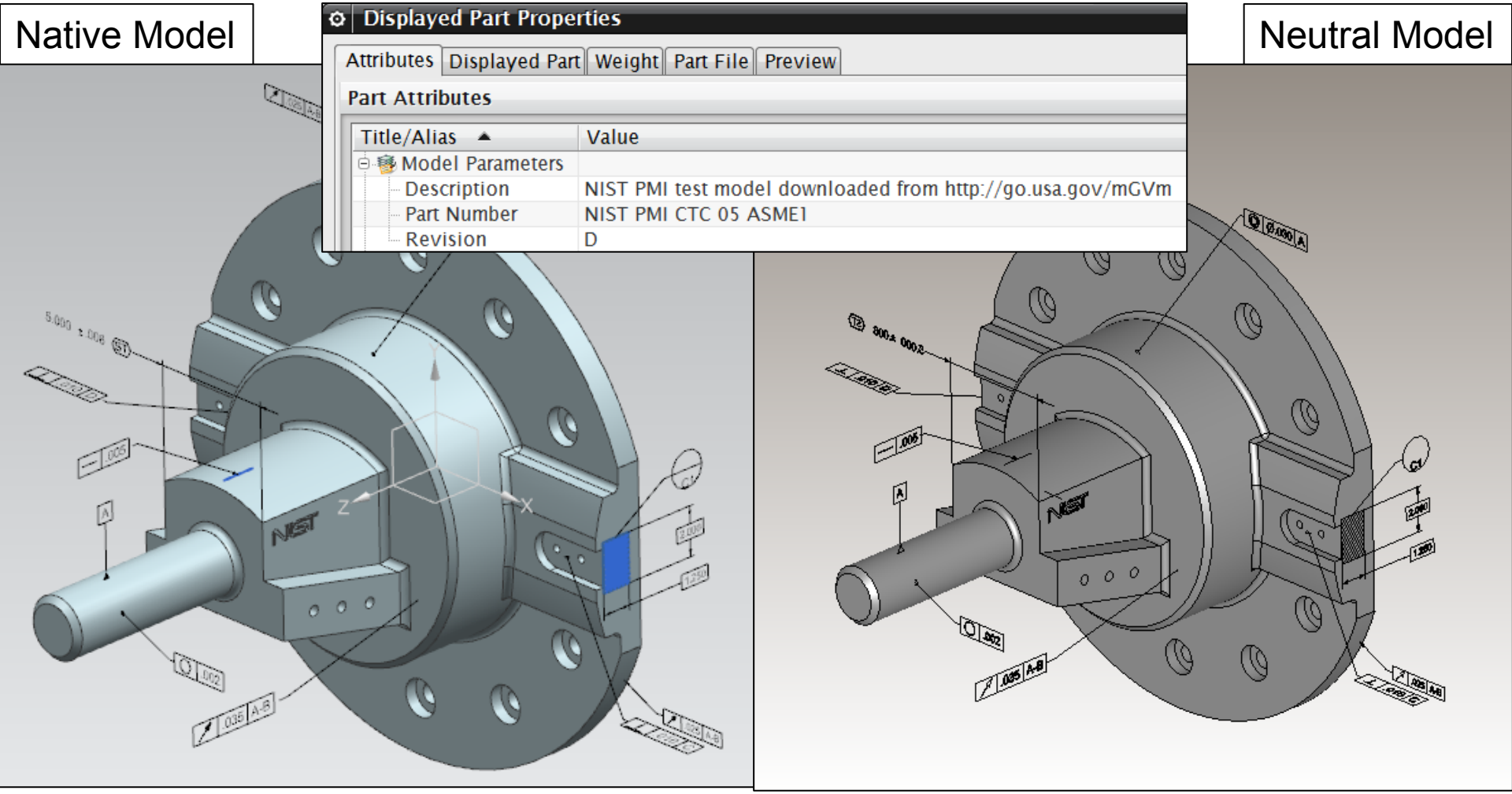

These model properties (parameters) are defined in the native model but not in the neutral model.

Return to Index

TranscenData

Translator Presentation Issues for Annotation Removed

Return to Index

Annotation hidden

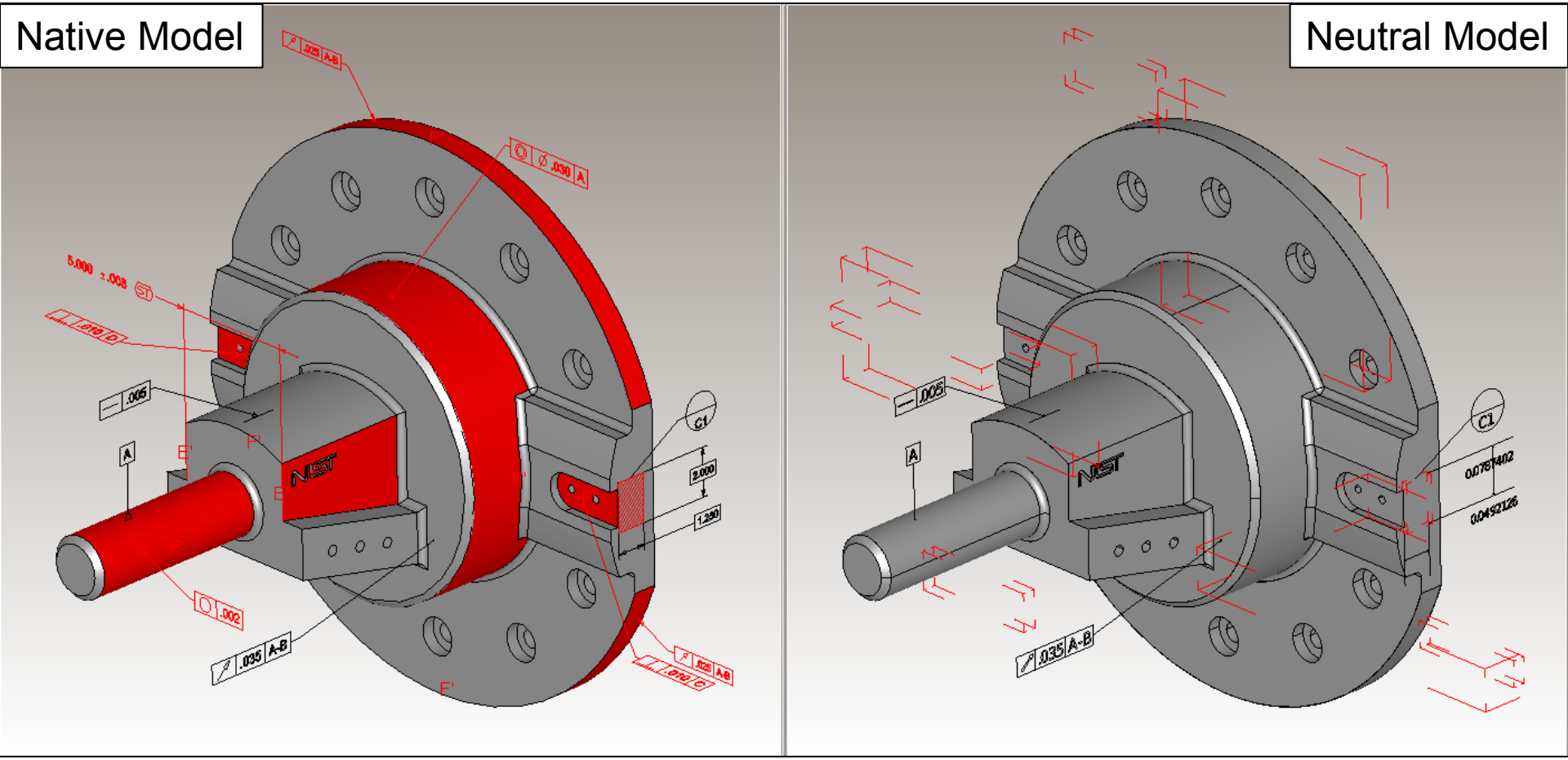

The highlighted annotations were translated but not displayed in this view.

Return to Index

TranscenData

Translator Presentation Issues for Annotation Changed

Return to Index

Annotation Color Changed

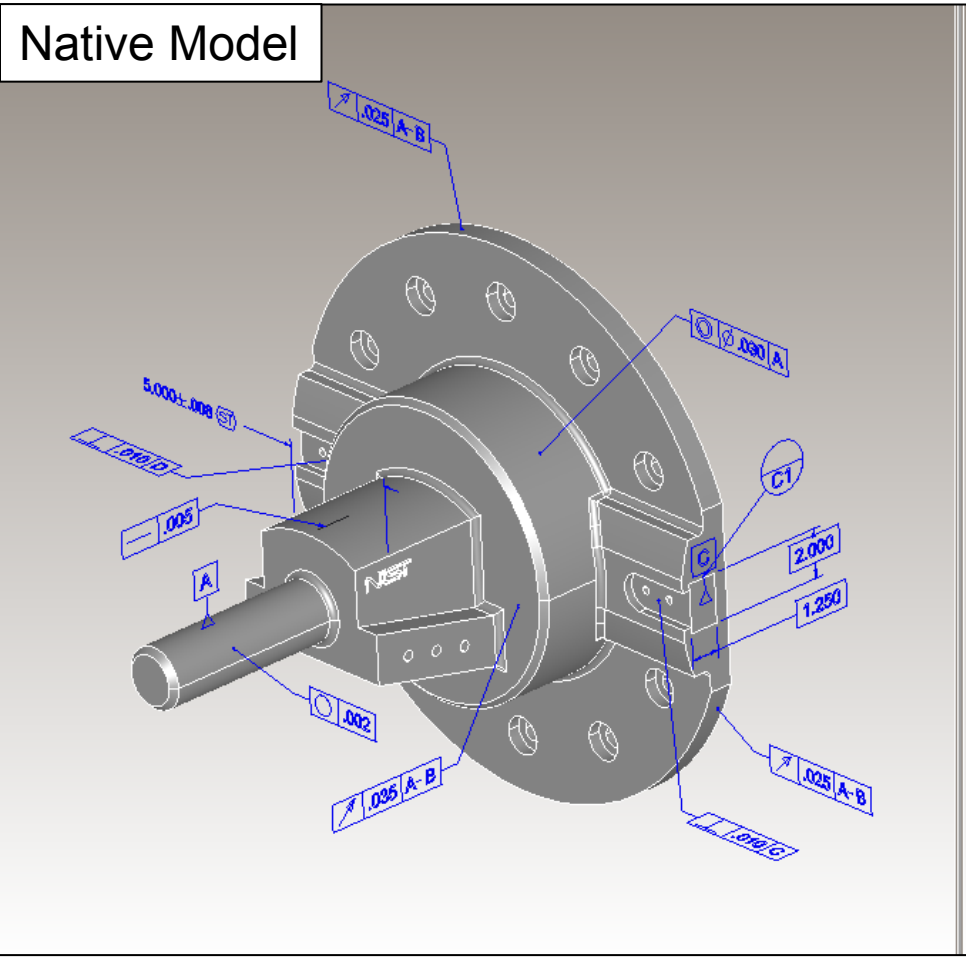

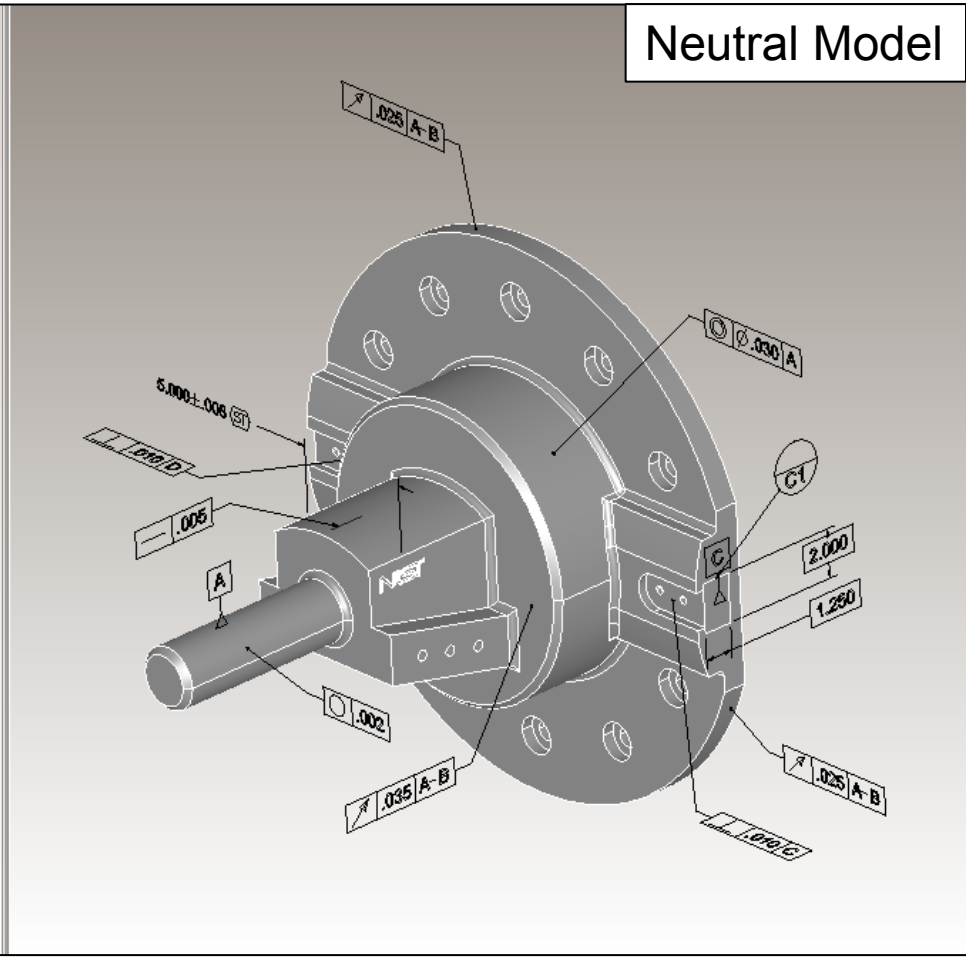

The color of these annotations was changed from blue to black.

Return to Index

TranscenData

Annotation Lines Changed

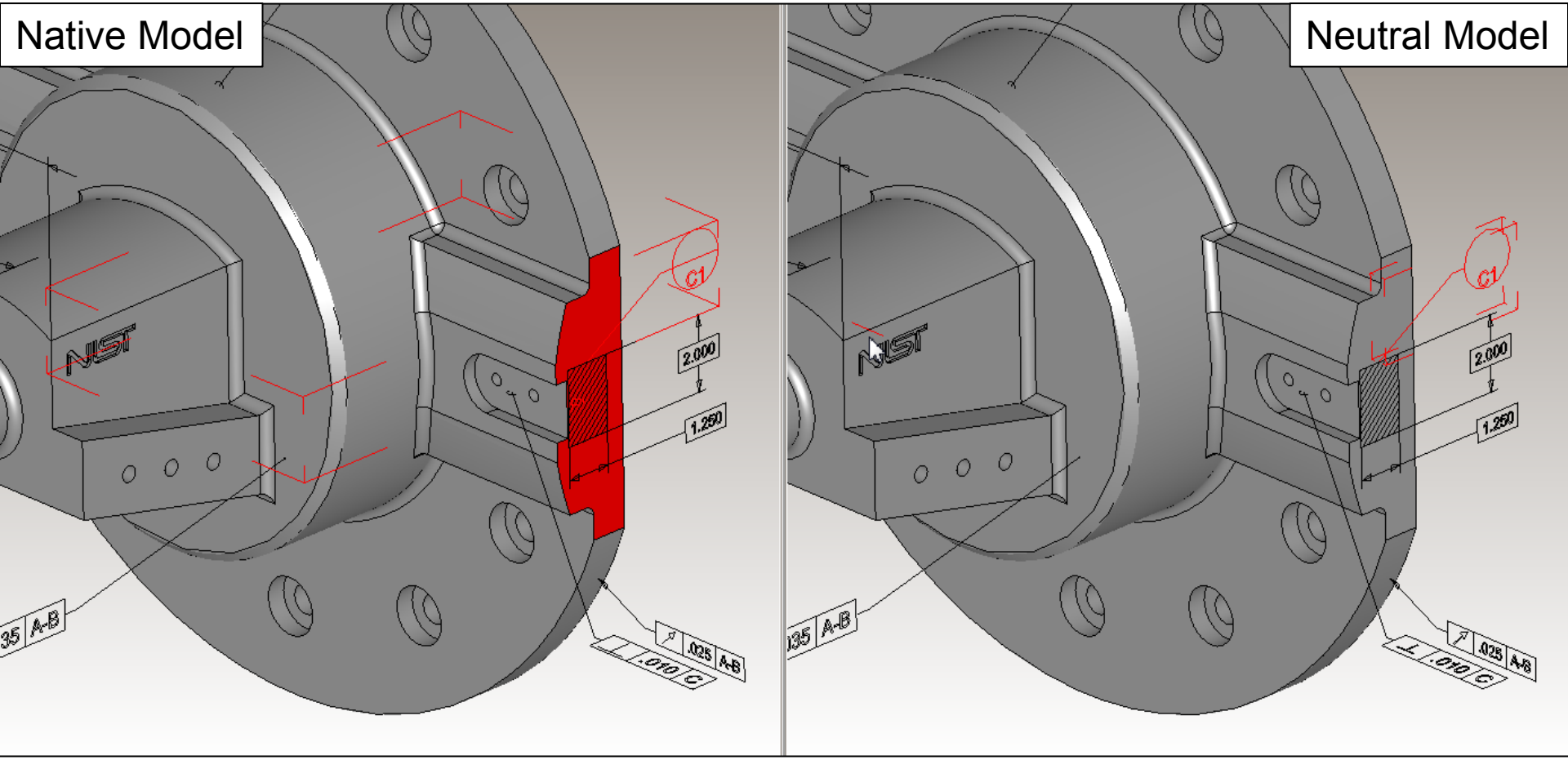

The divider line for this datum target symbol was moved to the location indicated by the cursor (right view).

Return to Index

TranscenData

Annotation Location Changed

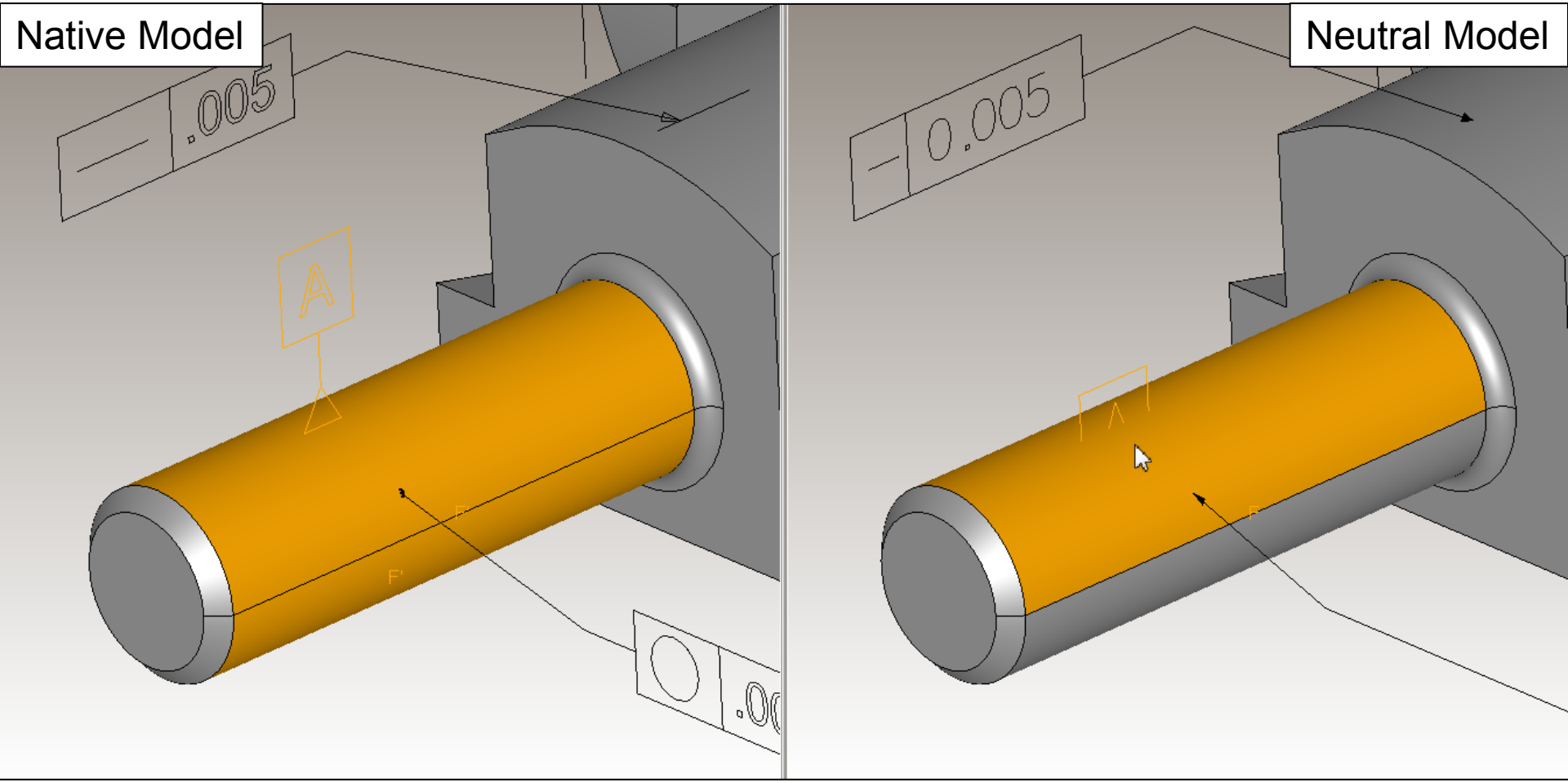

This datum feature symbol was moved so that it is partially buried in the solid.

Return to Index

ITI TranscenData

Annotation Name Changed

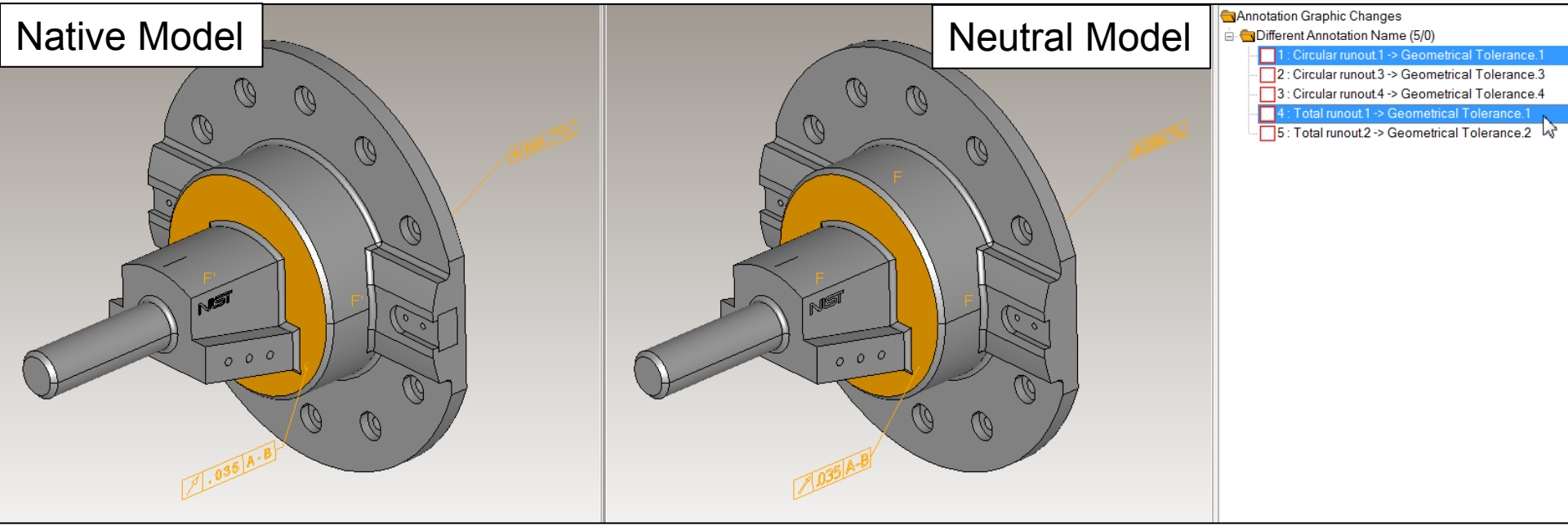

The display names of five annotations were changed.
The two highlighted annotations were changed to the same name.

Return to Index

Annotation Orientation Changed

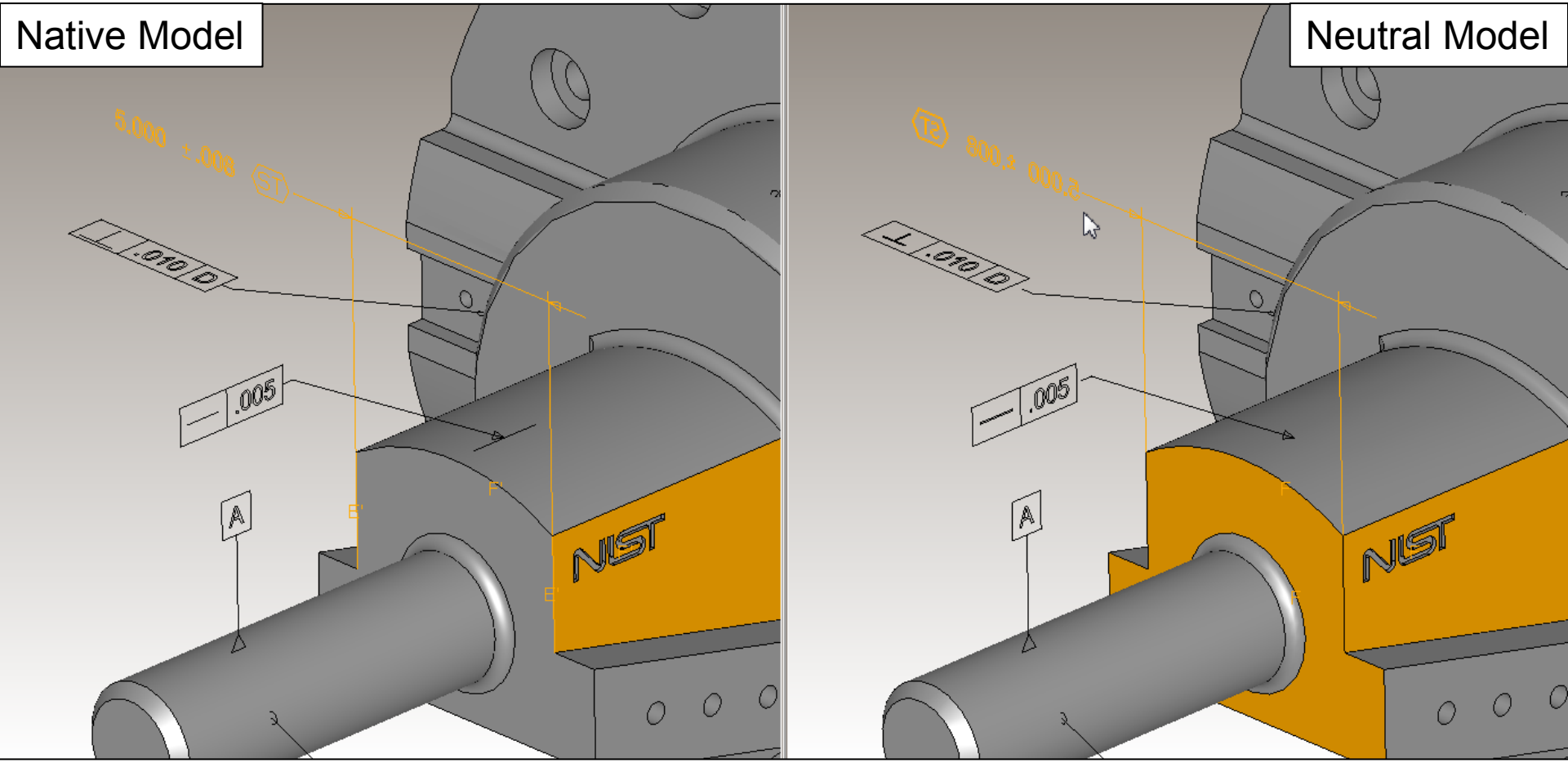

The orientation of this dimension was reversed in this view.

Return to Index

Annotation Text Changed

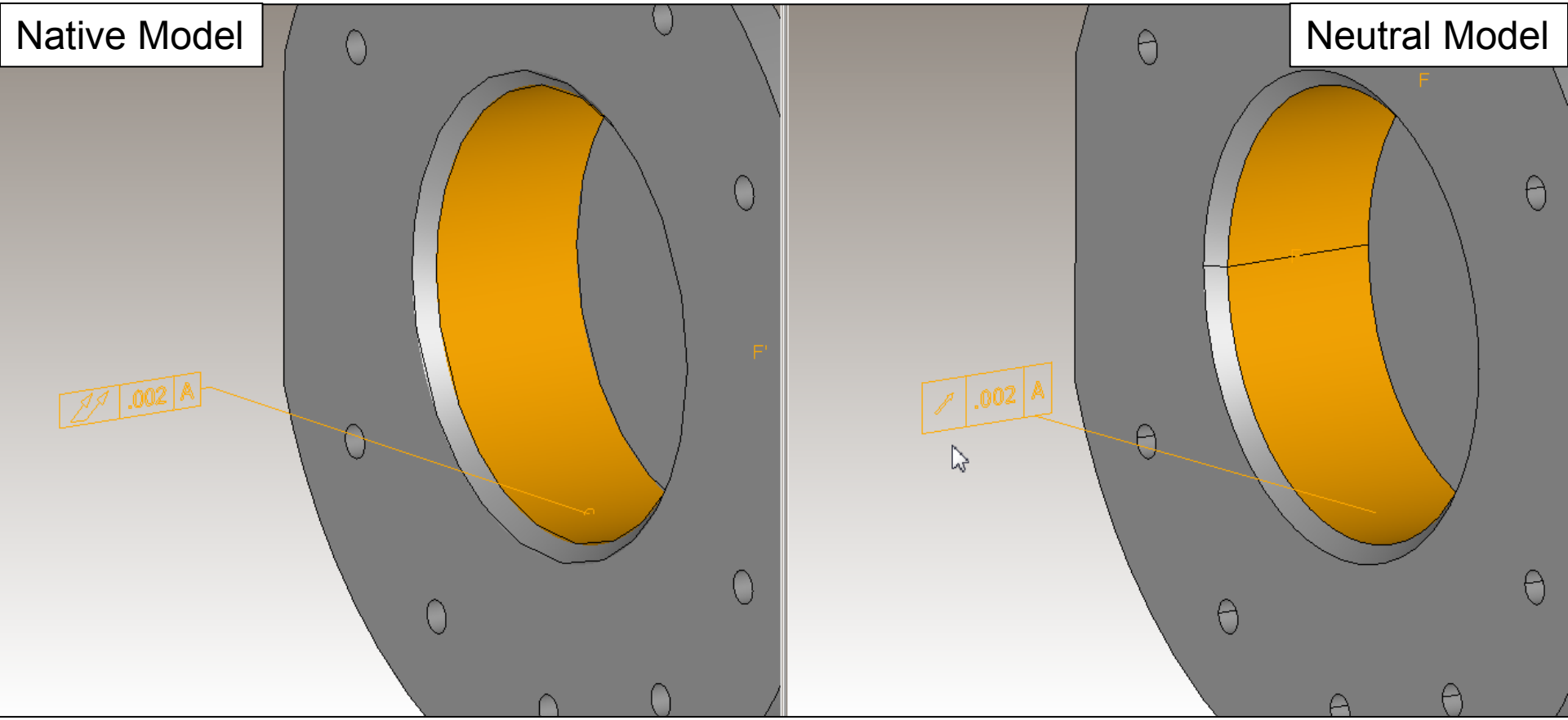

The symbol for this feature control frame was changed.

Return to Index

TranscenData

Annotation Text Changed

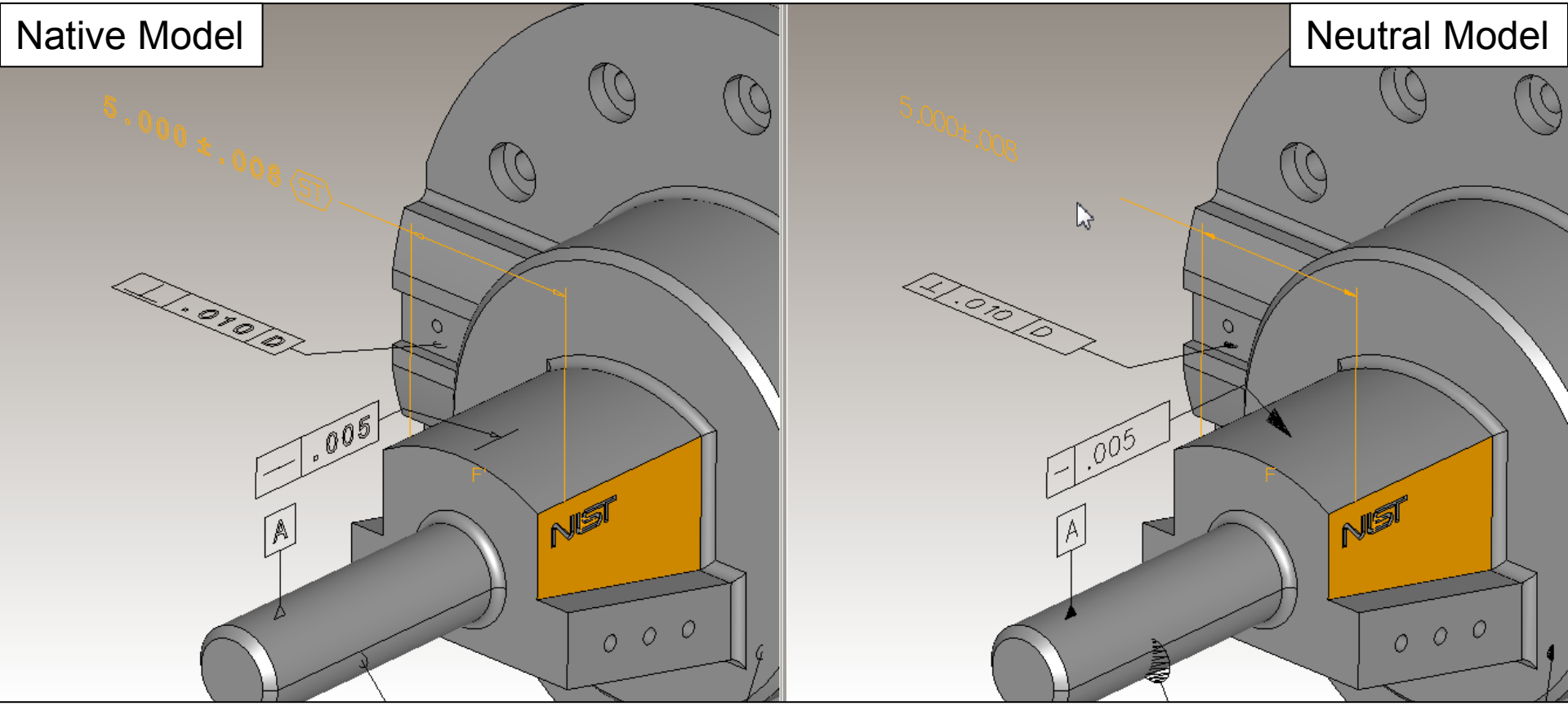

The statistical tolerance symbol for this dimension was lost.

Return to Index

TranscenData

Annotation Text Changed

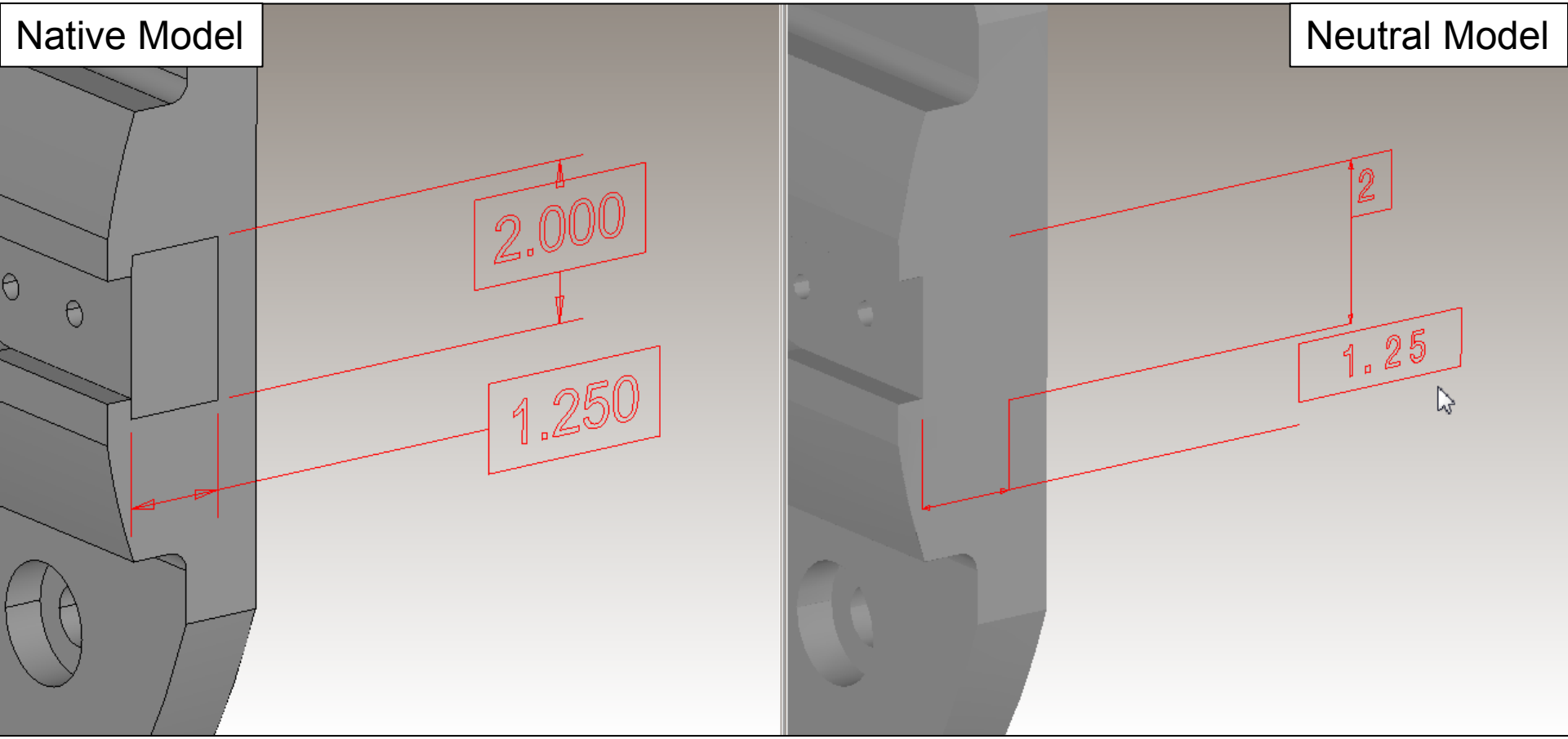

The trailing zeros for these basic dimensions were lost.

Return to Index

TranscenData

Translator Presentation Issues for Annotation Added

Return to Index

Annotation Shown

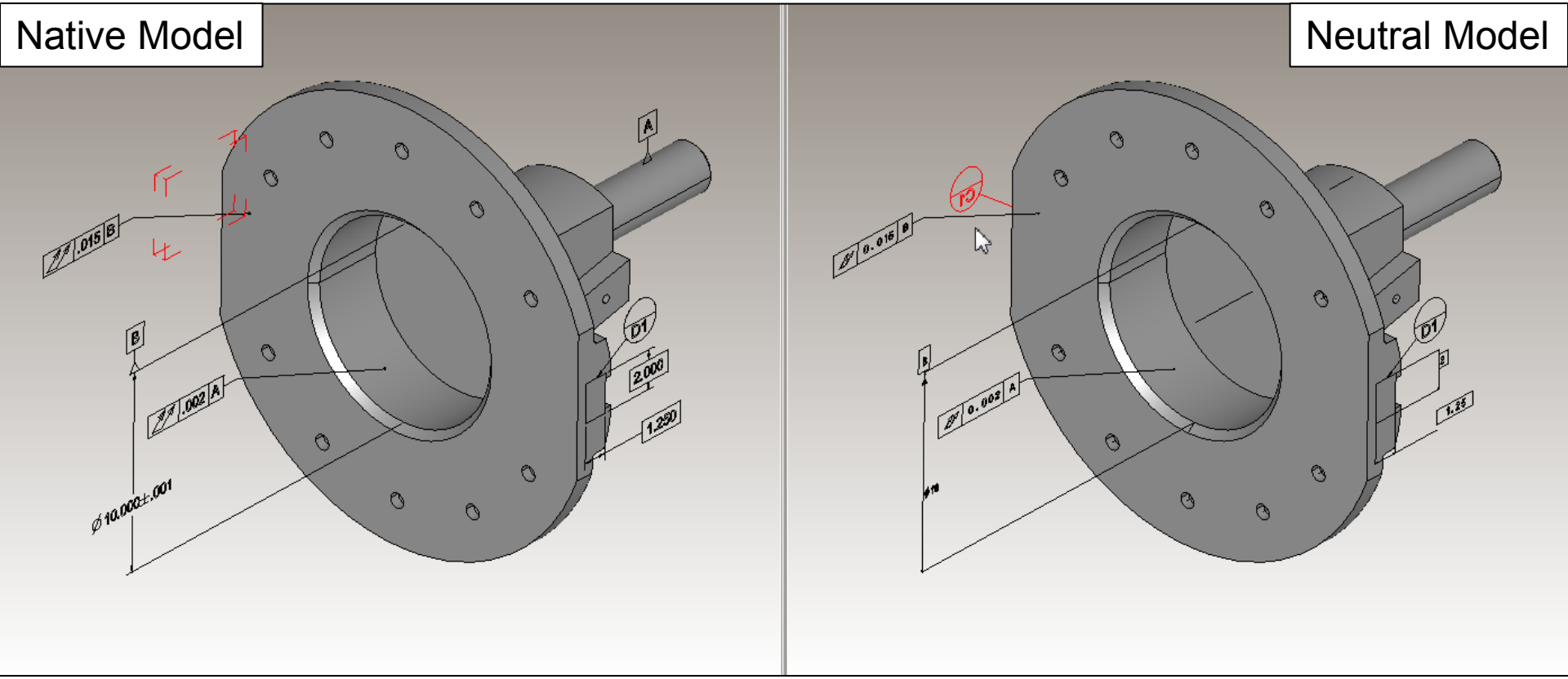

This datum target symbol was added to the display of this view.

Return to Index

TranscenData

Translator Presentation Issues for Coordinate System Removed

Return to Index

Coordinate System Hidden

Native Model

Neutral Model

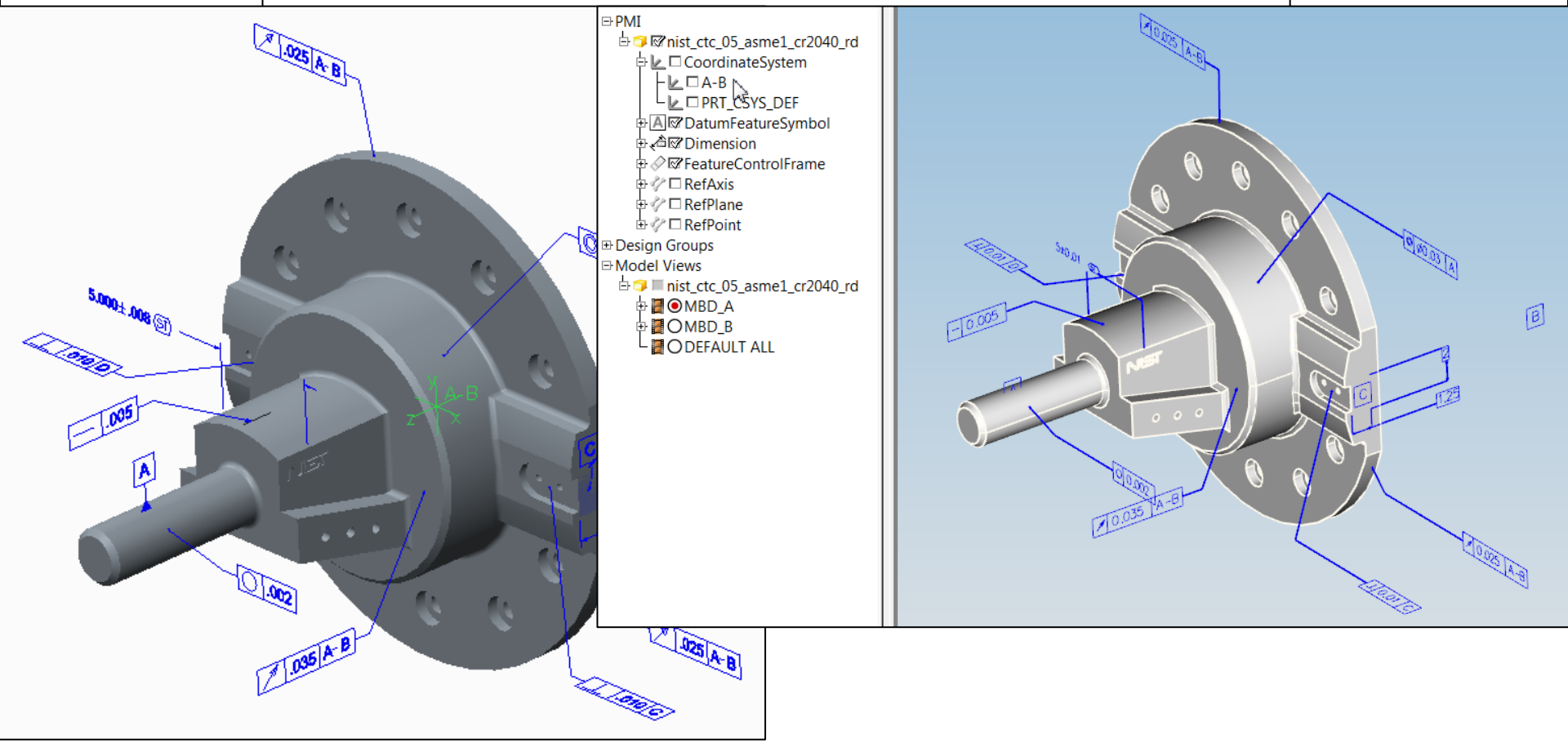

Coordinate system “A-B” is defined in the neutral model but not displayed when this view is activated.

Return to Index

TranscenData

Translator Presentation Issues for Product Geometry Changed

Return to Index

Face Tessellation Inaccuracy

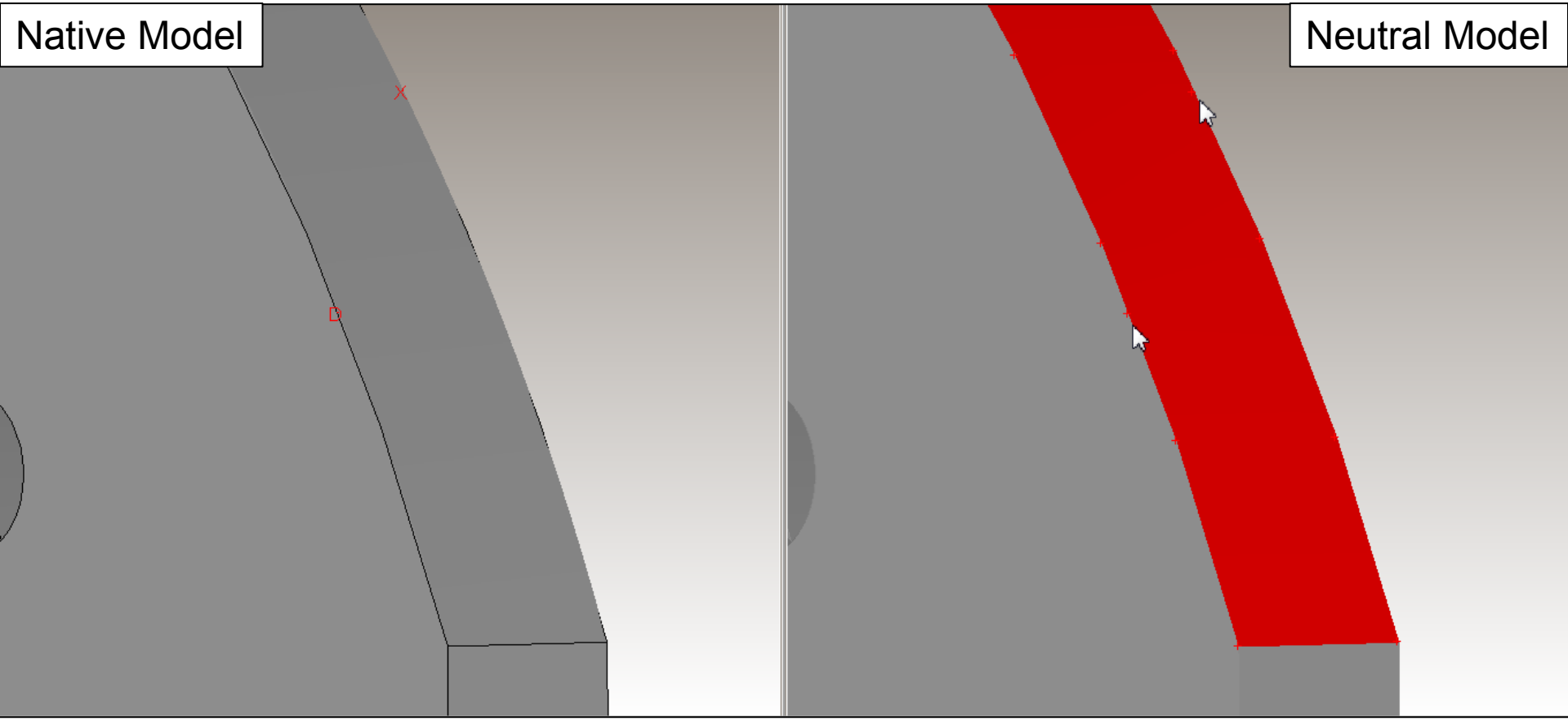

The indicated tessellation vertices have gaps up to .009 inch off of the precise geometry.

Return to Index

ITI TranscenData

Translator Presentation Issues for Supplemental Geometry Removed

Return to Index

Curve Hidden

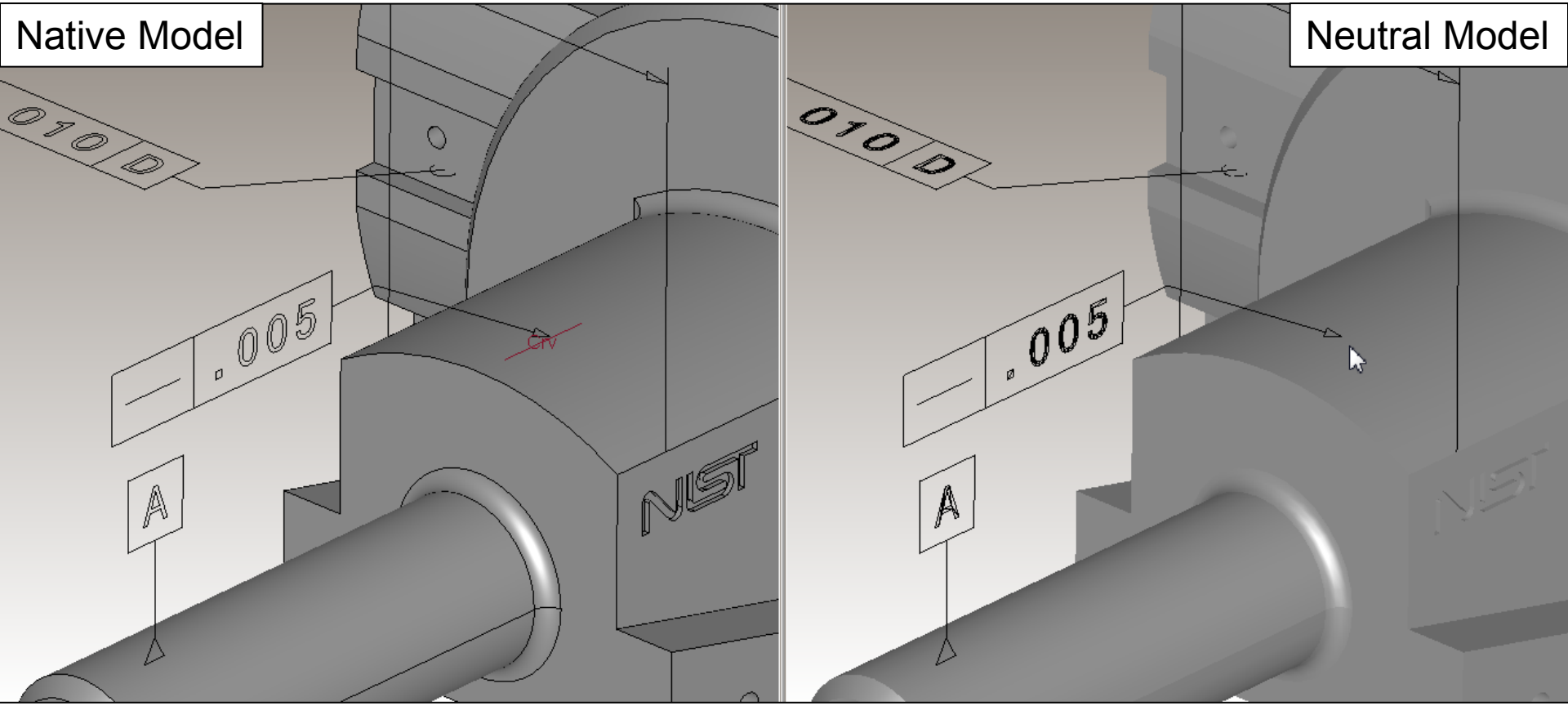

The represented line element for this straightness tolerance was translated but removed from this view.

Return to Index

TranscenData

Point Hidden

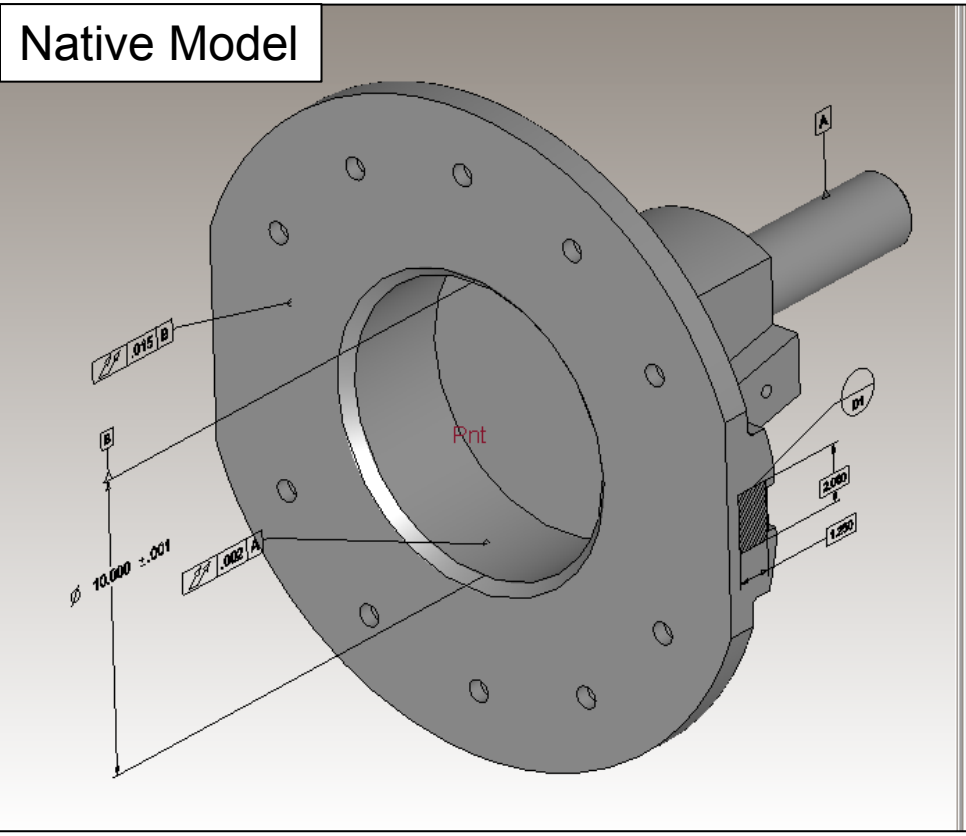

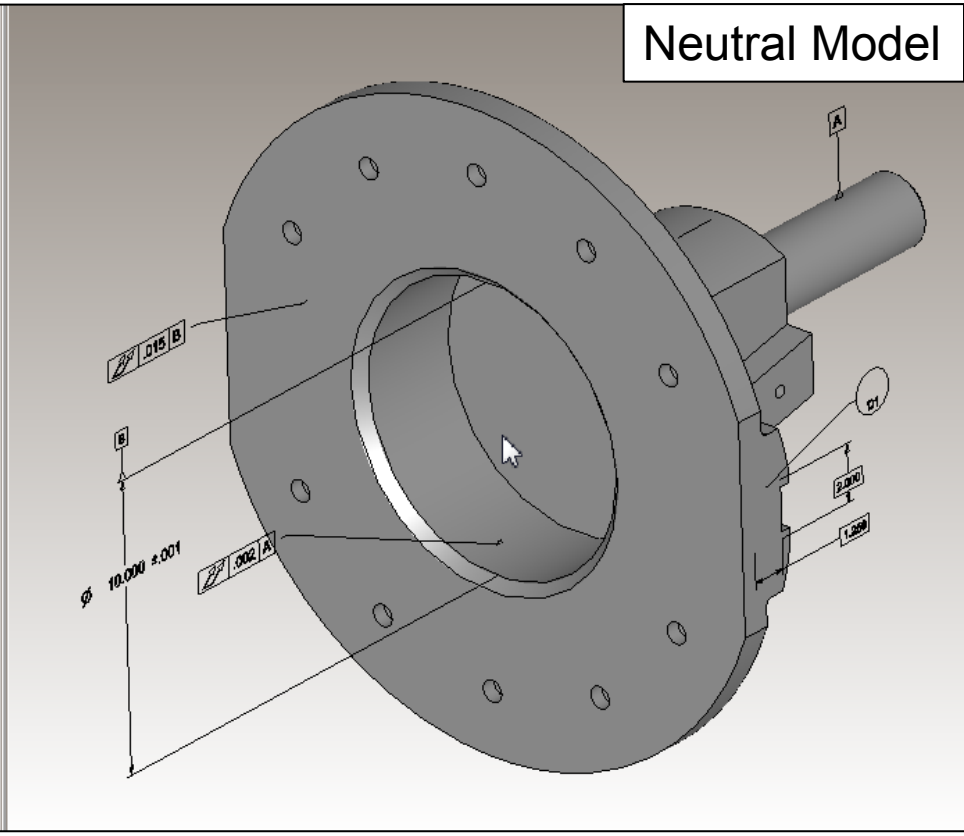

The origin point for the coordinate system of this model was removed from this view.

Return to Index

TranscenData

Surface Hidden

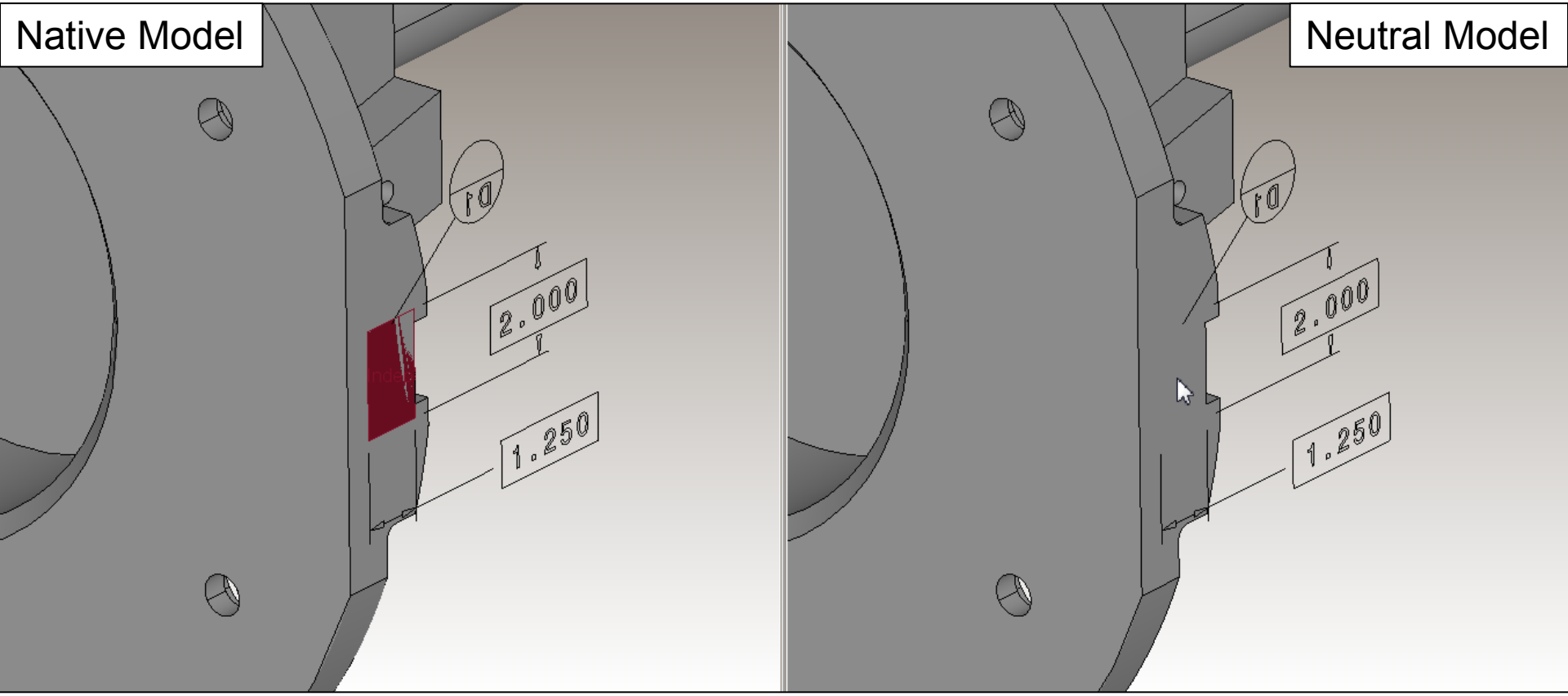

The non-solid surface representing the target area for this datum target was removed from this view.

Return to Index

Translator Presentation Issues for Supplemental Geometry Changed

Return to Index

Curve Color Changed

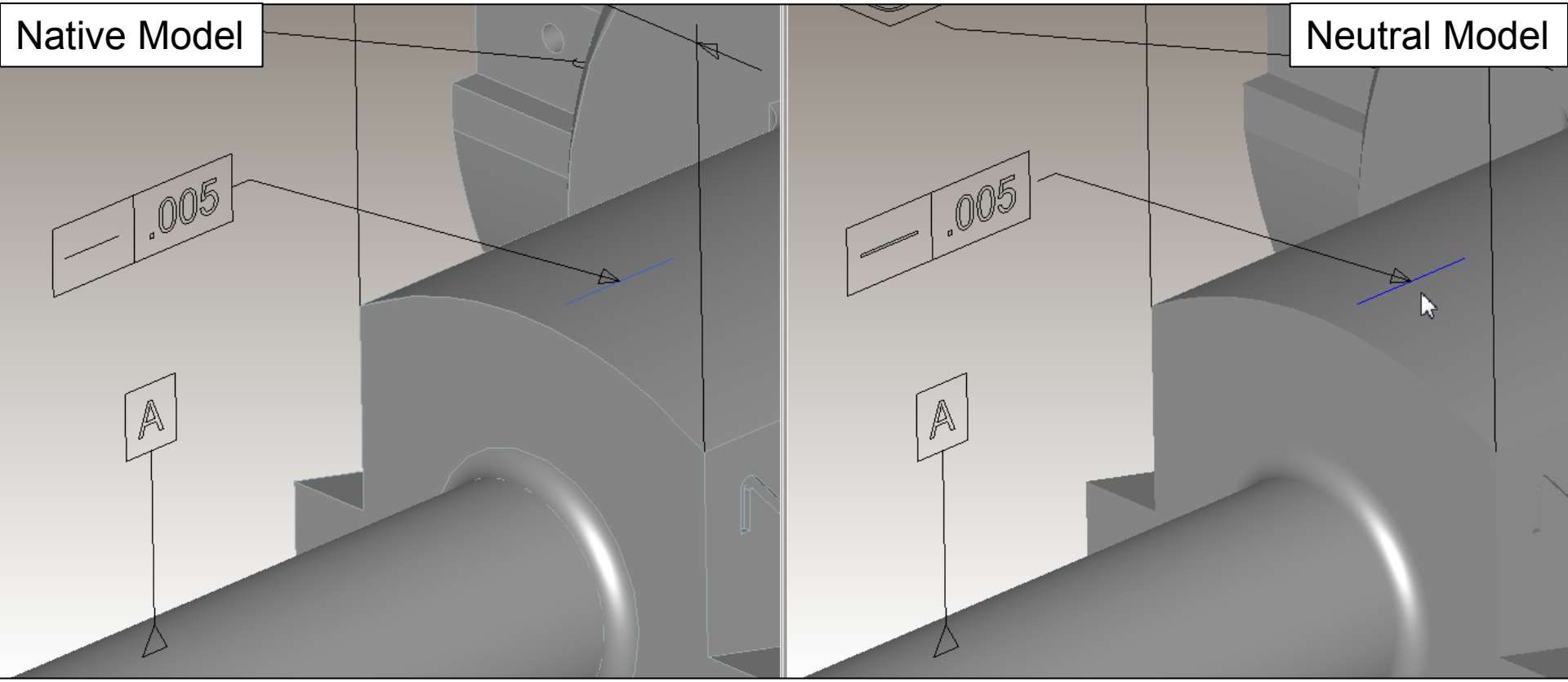

The color of the represented line element for this straightness tolerance changed from light to dark blue.

Return to Index

ITI TranscenData

Translator Presentation Issues for Supplemental Geometry Added

Return to Index

Curve Shown

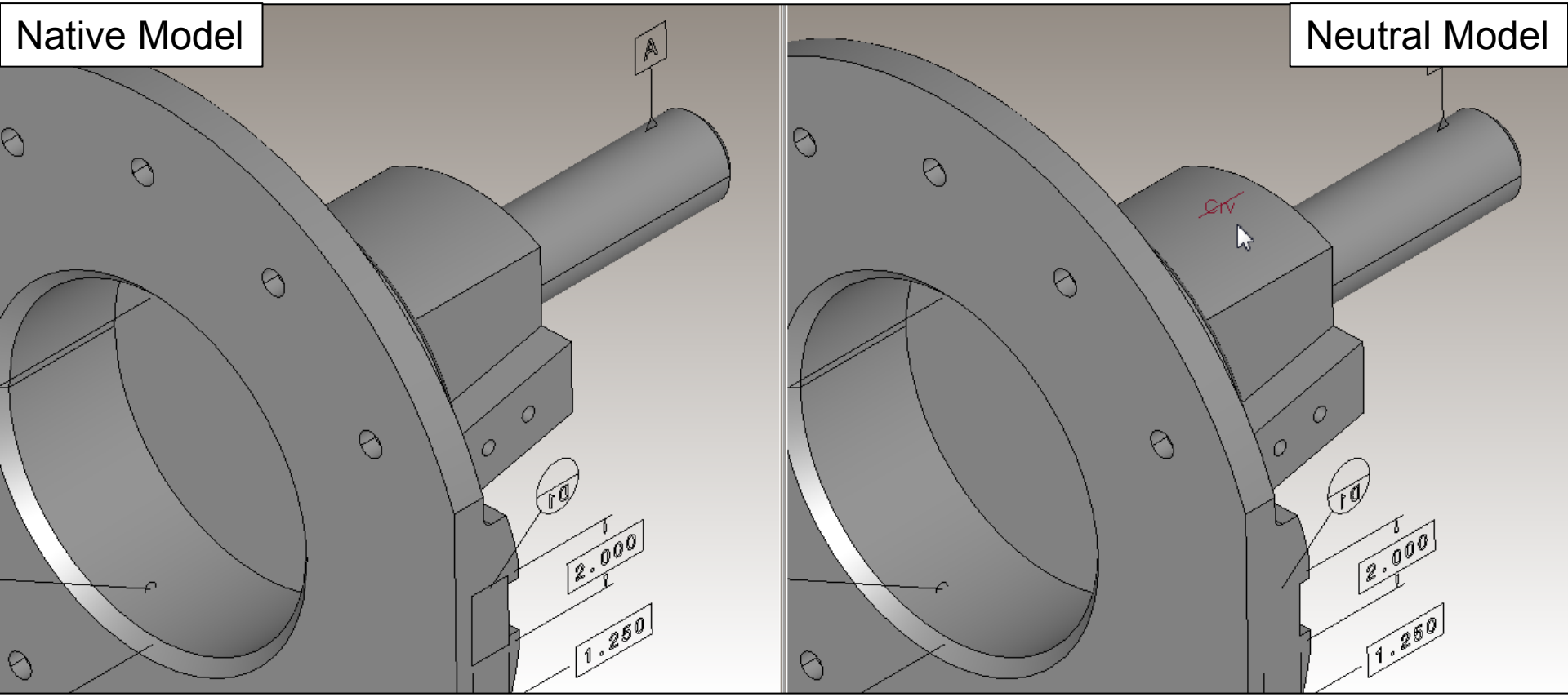

This curve was added to this view in which it is not used.

Return to Index

TranscenData

Point Shown

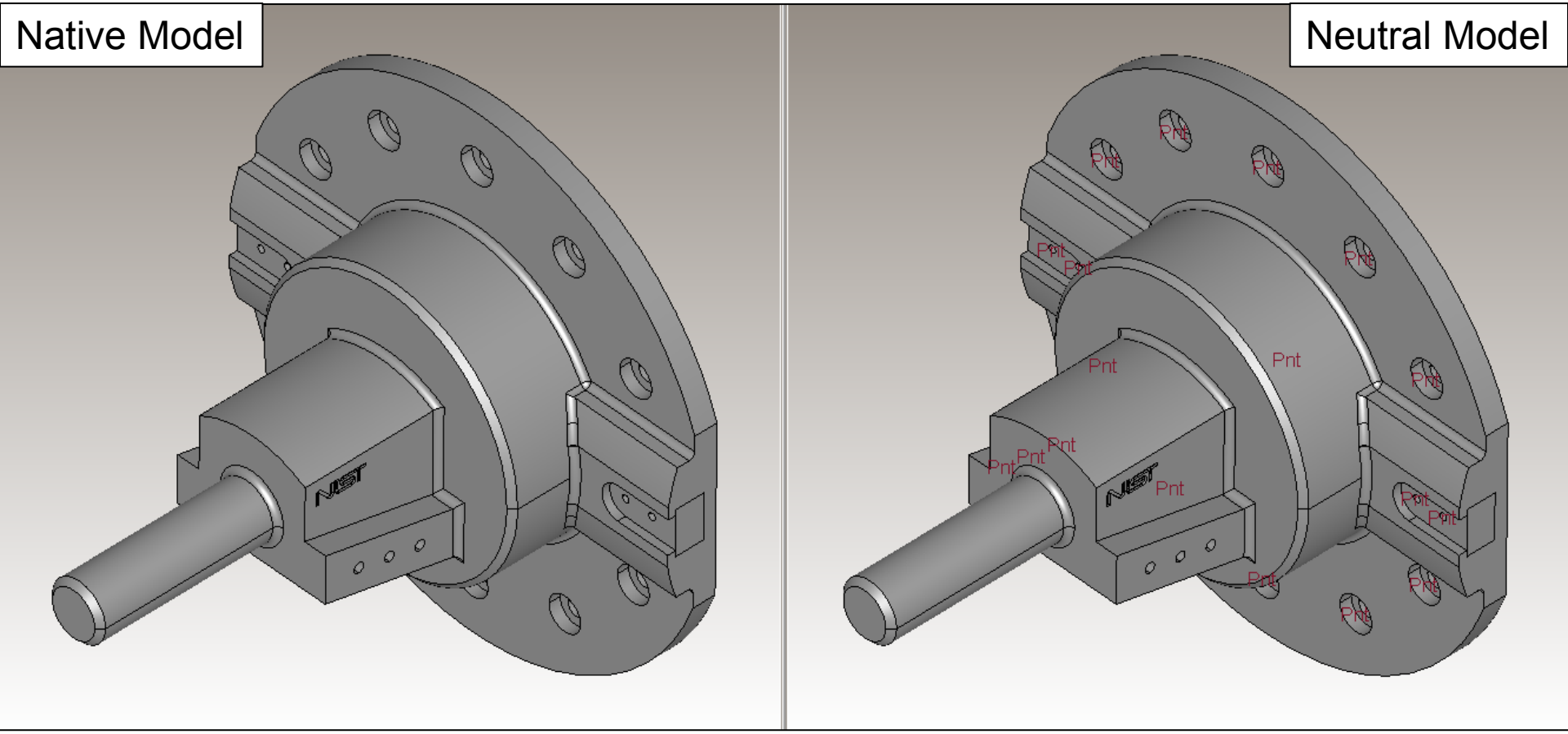

Several extraneous points were added to this view.

Return to Index

TranscenData

Surface Shown

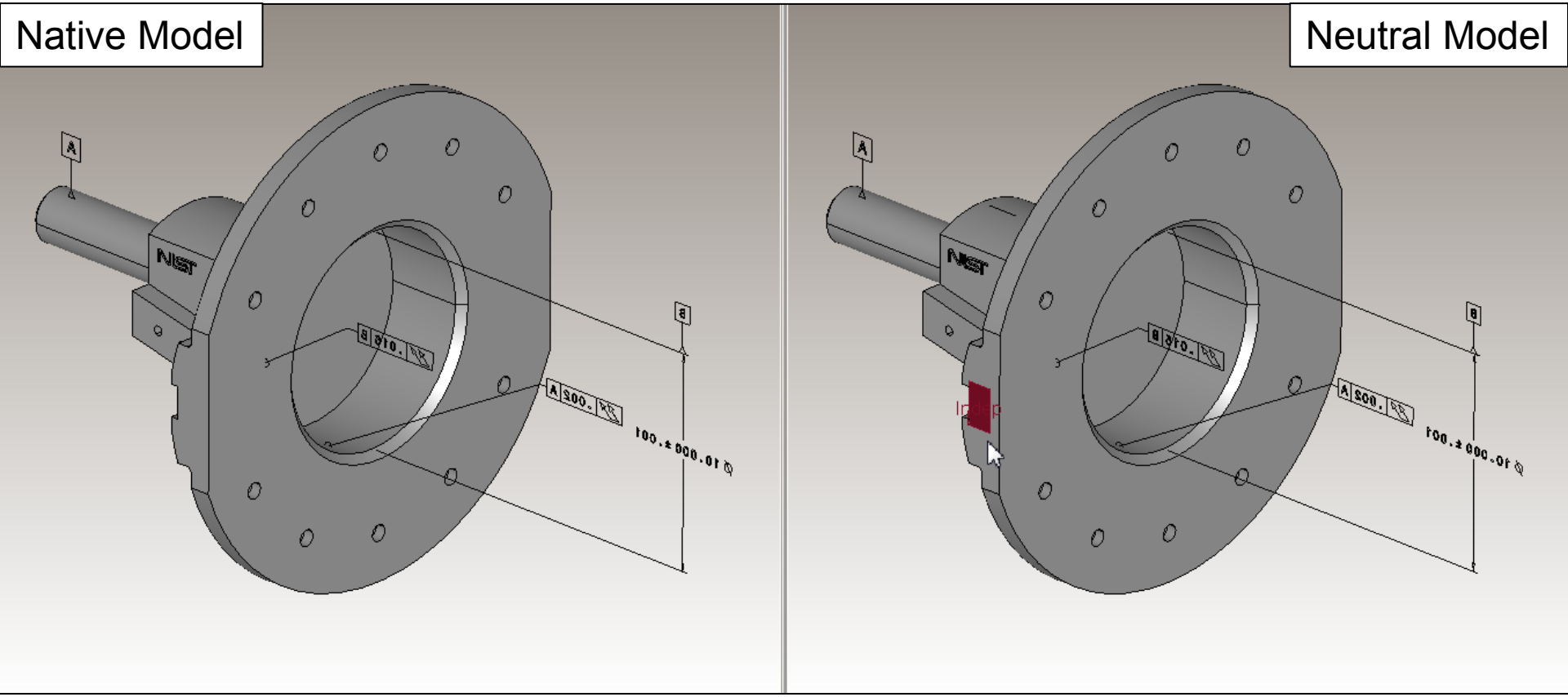

This non-solid surface was added to this view in which it is not used.

Return to Index

Translator Presentation Issues for Saved View Removed

Return to Index

View Removed

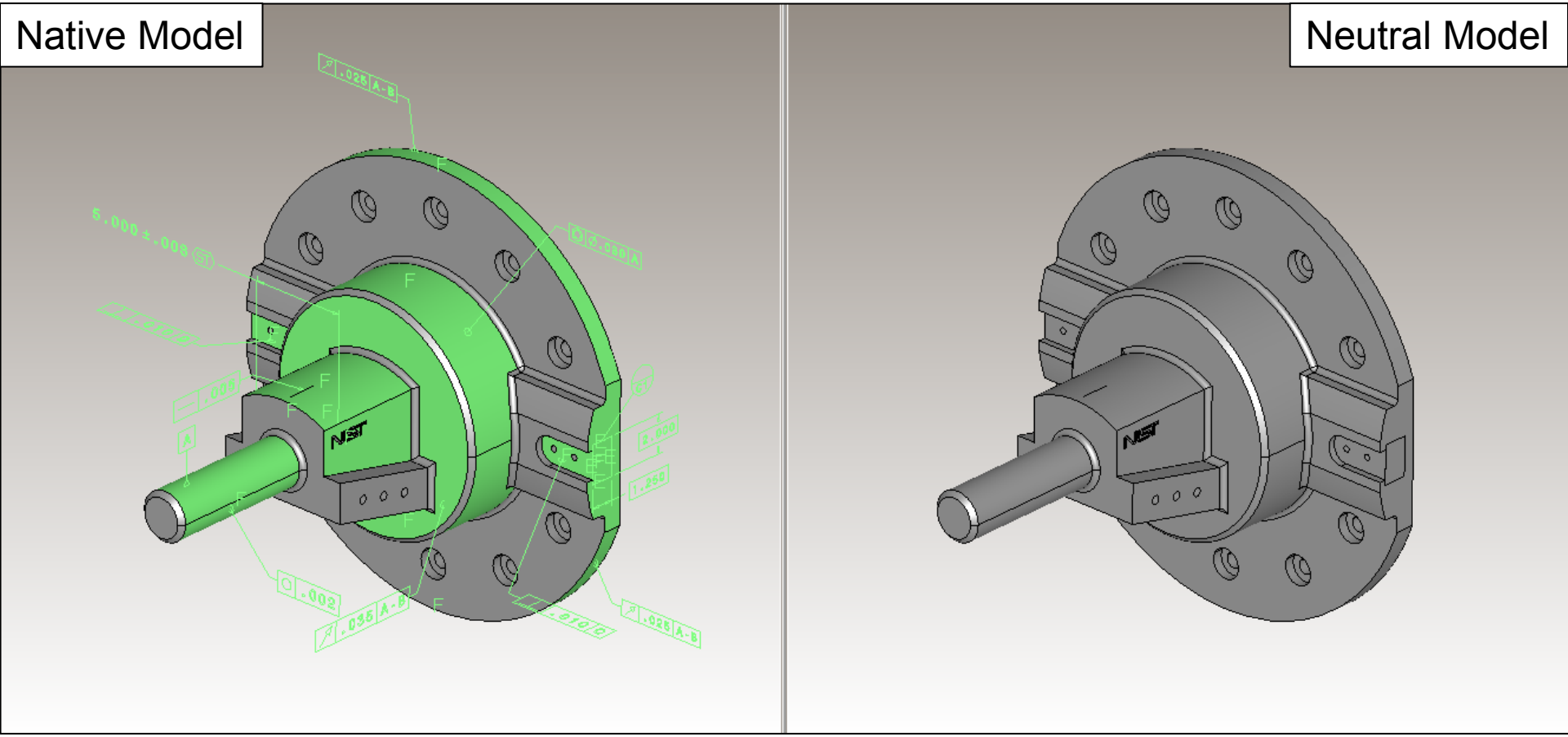

The saved view definitions were lost completely.

Return to Index

ITI TranscenData

Translator Presentation Issues for Saved View Changed

Return to Index

View Frustum Changed

Native Model

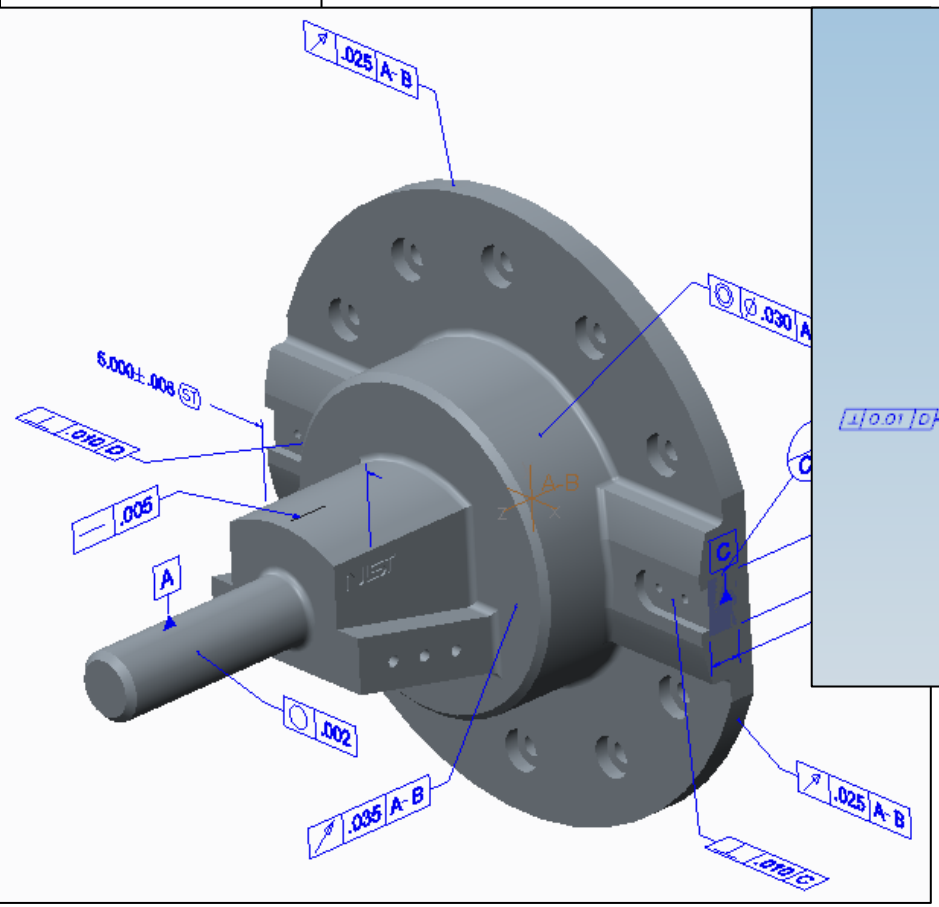

Neutral Model

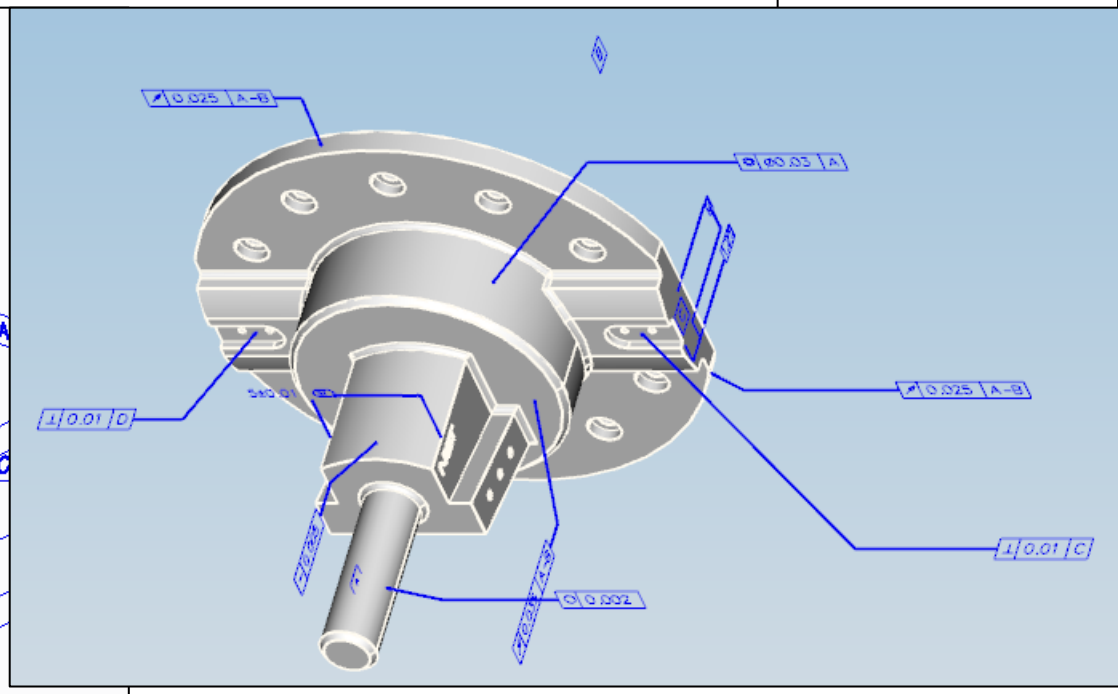

When this view is activated in the neutral model, the camera position, orientation and zoom level is different.

Return to Index

TranscenData

View Name Changed

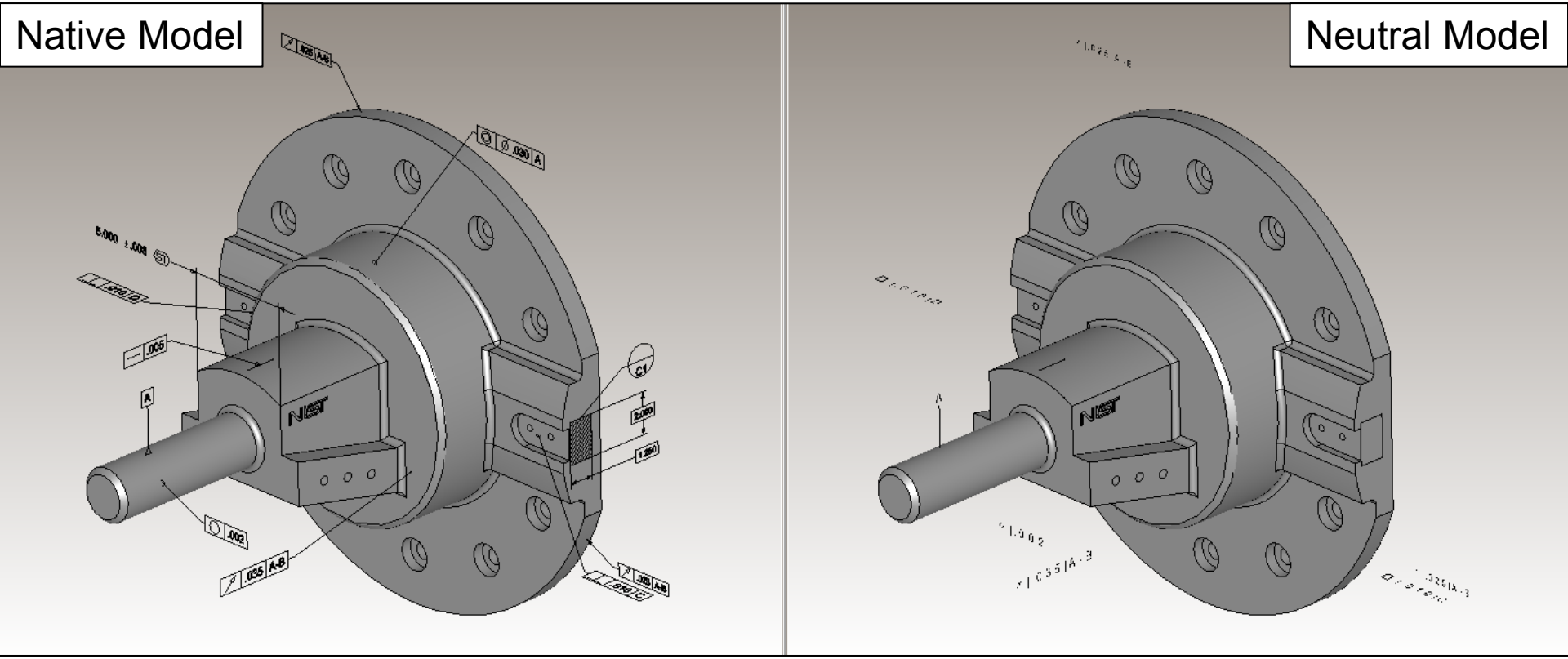

The definition of this view was translated incompletely, including the loss of its display name.

Return to Index

TranscenData

Translator Presentation Issues for Saved View Added

Return to Index

View Added

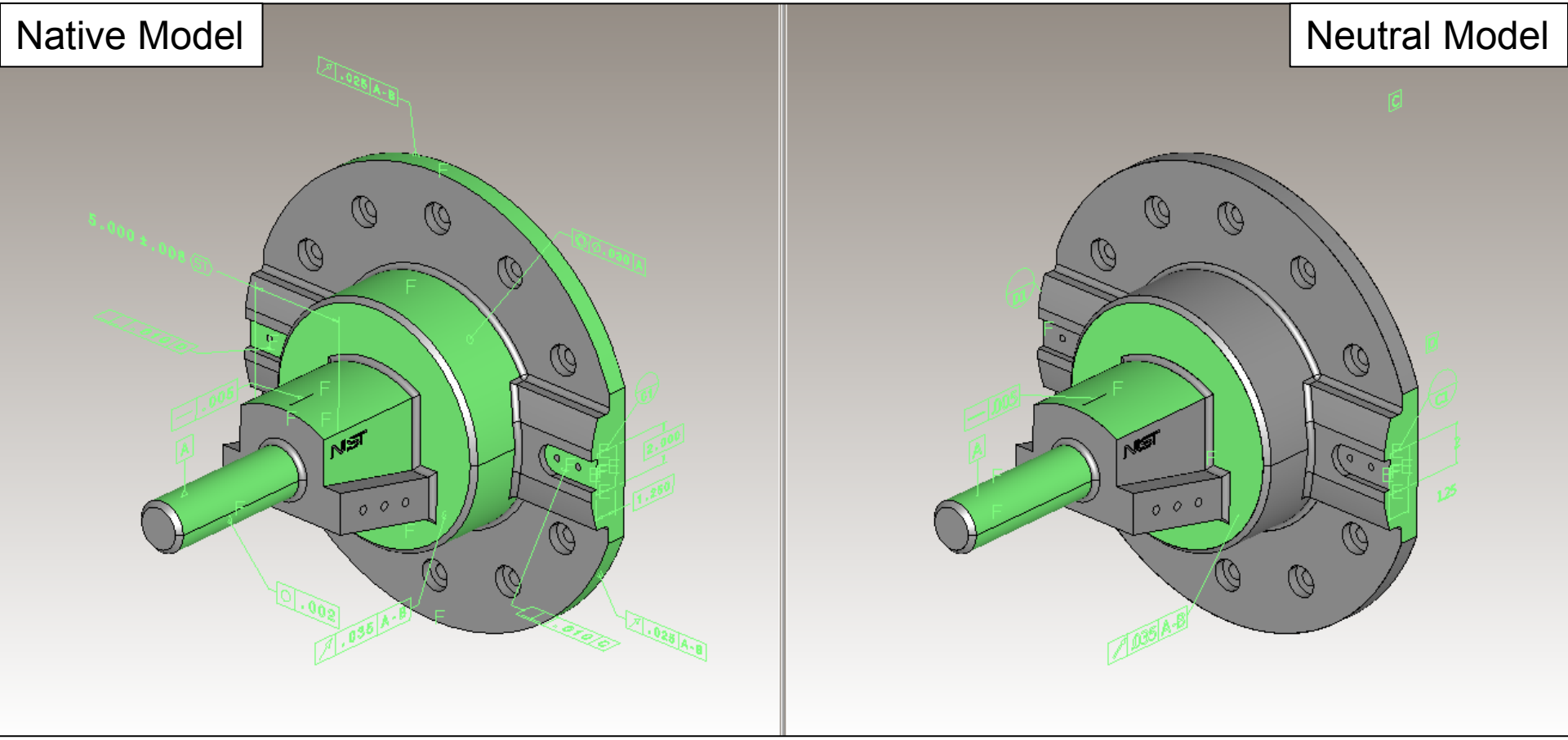

Several views were added which contain partial definitions of the views in the native model.

Return to Index

PMI Constructs

Return
to Index

PMI Constructs in CTC 05

Construct Description	Units	Construct Specification
Datum Feature symbol attached to a Size Dimension	inch	B Ø10.000 ±.001
Datum Feature symbol attached to Feature of Size	inch	A
Datum Target Symbol and Target Area Applied to Surface: Area Defined on Surface (Rectangular)	inch	C1, D1 2.000 (basic), 1.250 (basic)
Directly-Toleranced Dimension with Statistical Tolerancing Symbol	inch	5.000 ±.008 ⟨ST⟩
Feature Control Frame Directed to Surface - Circular Runout	inch	↗.035|A-B ↗.025|A-B
Feature Control Frame Directed to Surface - Circularity	inch	○.002
Feature Control Frame Directed to Surface - Concentricity	inch	◎Ø.030|B
Feature Control Frame Directed to Surface - Perpendicularity	inch	⊥ .010|C ⊥ .010|D
Feature Control Frame Directed to Surface - Total Runout	inch	⌰.002|A ⌰.015|B
Feature Control Frame Directed to Surface - Straightness with Represented Line Element	inch	⏤.005
Multiple Datum Feature	inch	↗.035|A-B ↗.025|A-B
Model Coordinate System for Multiple Datum Feature	inch	MCS for A-B

Return to Index

TranscenData

Test Case Drawings and Models

Return
to Index

Combined Test Case 5, Saved View MBD_A Drawing

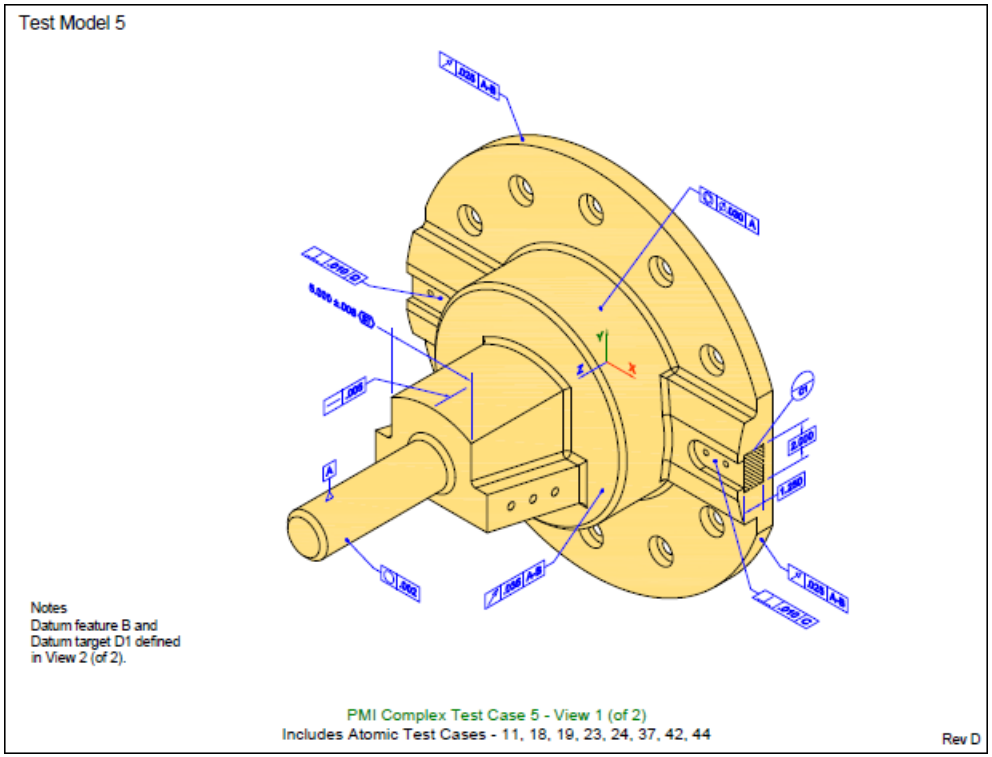

Return to Index

ITI TranscenData

Combined Test Case 5, Saved View MBD_A Models

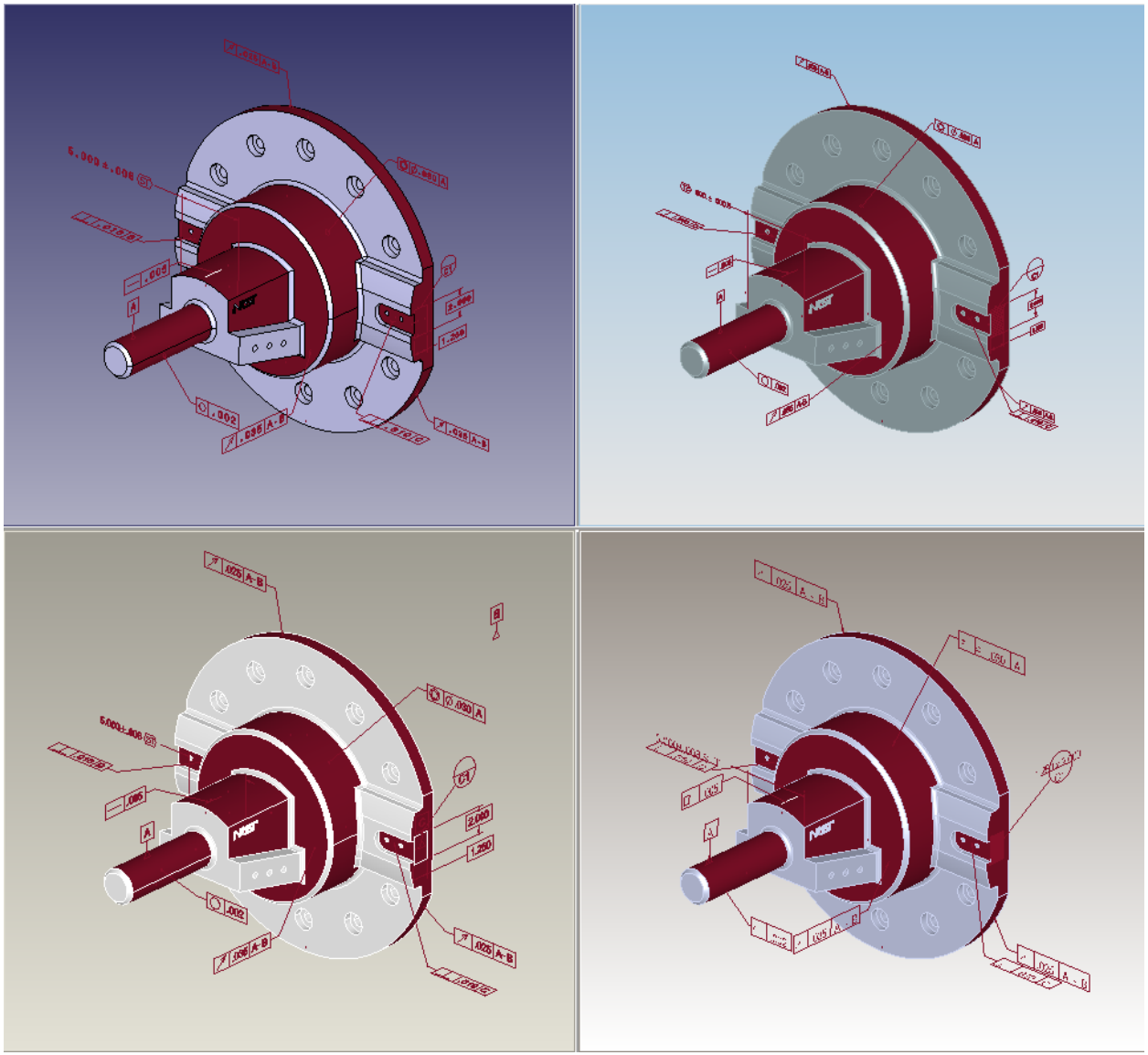

Return to Index

ITI TranscenData

Combined Test Case 5, Saved View MBD_B Drawing

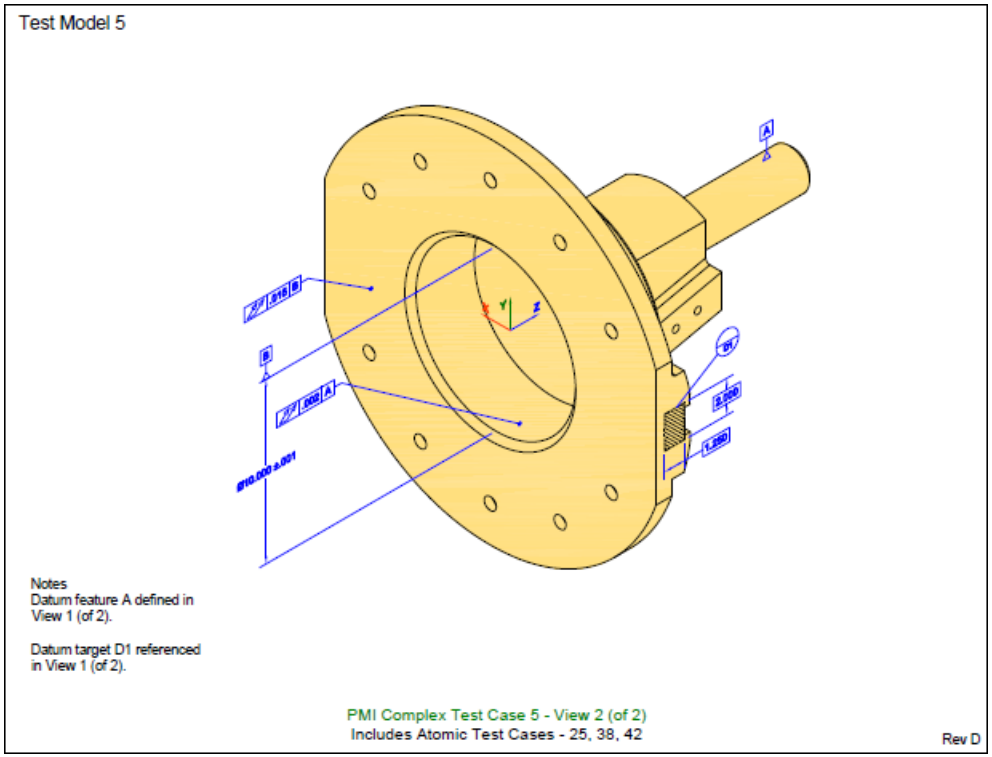

Return to Index

ITI TranscenData

Combined Test Case 5, Saved View MBD_B Models

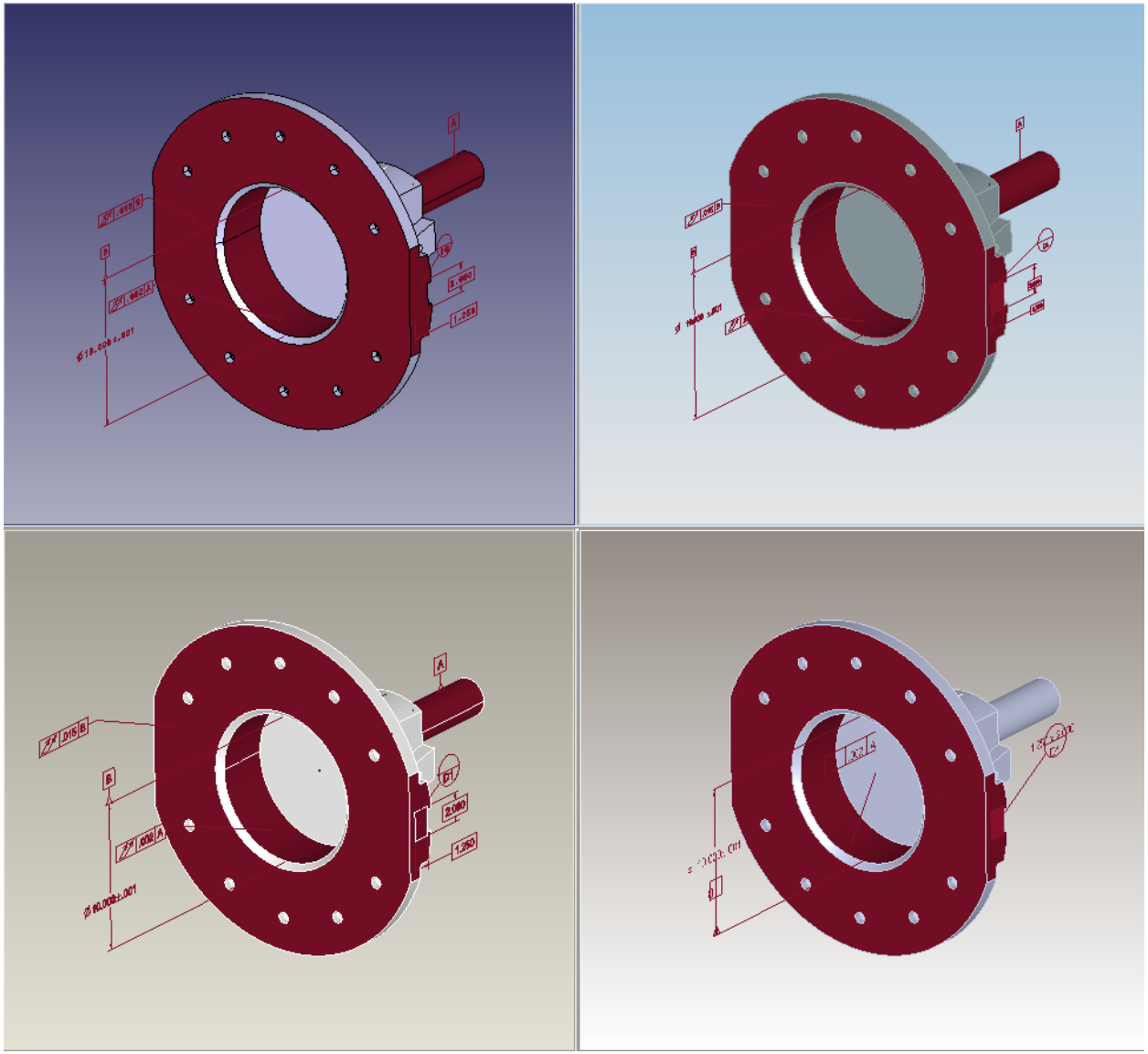

Return to Index

ITI TranscenData