Voluntary Product Standard PS 2-25

Performance Standard for Wood Structural Panels

October 23, 2026

U.S. Department of Commerce
Howard Lutnick, Secretary

National Institute of Standards and Technology
Arvind Raman, NIST Director and Undersecretary of Commerce for Standards and Technology

Certain commercial entities, equipment, or materials may be identified in this document in order to describe an experimental procedure or concept adequately. Such identification is not intended to imply recommendation or endorsement by the National Institute of Standards and Technology, nor is it intended to imply that the entities, materials, or equipment are necessarily the best available for the purpose.

Additional information concerning the development and use of this Standard can be obtained by contacting the Standards Coordination Office, National Institute of Standards and Technology, 100 Bureau Drive, MS 2100, Gaithersburg, MD 20899-2100 or visiting Standards.Gov.

DEPARTMENT OF COMMERCE (DOC) VOLUNTARY PRODUCT STANDARDS

DOC Voluntary Product Standards are developed under procedures published by the Department of Commerce in Title 15 Code of Federal Regulations Part 10, *Procedures for the Development of Voluntary Product Standards.* The purpose of these Standards is to establish nationally recognized requirements for products and to provide all concerned interests with a basis for common understanding of the characteristics of the products. The National Institute of Standards and Technology (NIST) administers the Voluntary Product Standards program on a reimbursable basis.

ROLE OF NIST

The role of NIST in the establishment of a DOC Voluntary Product Standard is to act as an unbiased coordinator in the development of the standard, provide editorial assistance in the preparation of the standard, supply such assistance and review as is required to assure the technical soundness of the standard, and seek satisfactory adjustment of valid points of disagreement. NIST also determines compliance with the criteria of the Department's procedures and publishes the standard as a public document.

Manufacturers, distributors, users, consumers, and other interested groups contribute to the establishment of Voluntary Product Standards. These groups initiate and participate in the development of the standards, provide technical or other counsel as appropriate, promote the use of and support for the standards, and assist in keeping them current with respect to advancing technology and marketing practices.

USE OF VOLUNTARY PRODUCT STANDARDS

The use of DOC Voluntary Product Standards is voluntary. NIST has no regulatory power in the enforcement of their provisions; however, since the standards represent a consensus of interested groups, their provisions are likely to become established as trade customs. In addition, when a Voluntary Product Standard is made a part of a legal document, such as a sales contract or code, compliance with the standard is enforceable.

The benefits derived from a DOC Voluntary Product Standard are in direct proportion to their general recognition and actual use. Manufacturers and distributors whose products conform to the requirements of a DOC Voluntary Product Standard may refer to the standard in advertising and on labels to promote greater public understanding for confidence in their products. At times, purchasers may order products conforming to the requirements of a DOC Voluntary Product Standard.

Abstract

This Standard establishes performance requirements, adhesive bond performance, panel construction and workmanship, dimensions and tolerances, marking, and moisture content of wood structural panels. Wood structural panels include structural plywood, oriented strand board (OSB), other mat-formed panels, and composite panels. The standard classifies panels by bond classification, span rating, performance category, and grade. It provides test methods, a glossary of trade terms and definitions, manufacturer quality system requirements, and a product certification program whereby agencies inspect, sample, and test products for conformance to this Standard. Information regarding industry practices for reinspection, a qualification flowchart, history of the standard, labeling, and environmental attributes are provided in nonmandatory appendices.

Keywords

Adhesive bond classification; certification; construction sheathing; wood structural panel; dimensions and tolerances; marking; moisture content; oriented strand board; OSB; panel construction; performance requirements; span rating; mat-formed panel; performance category; structural plywood; test methods; voluntary standard; wood-based panels.

TABLE OF CONTENTS

SECTION		PAGE
1	SCOPE	1
2	TERMINOLOGY	2
3	REFERENCE PUBLICATIONS	5
4	CLASSIFICATION	6
5	REQUIREMENTS	7
6	PERFORMANCE QUALIFICATION TESTING AND MILL SPECIFICATION	16
7	TEST METHODS	24
8	MARKING AND CERTIFICATION	45
9	QUALITY ASSURANCE REQUIREMENTS	47
10	EFFECTIVE DATE AND IDENTIFICATION	50
11	STANDARD REVIEW COMMITTEE	50
APPENDIX A. REINSPECTION PRACTICES		51
APPENDIX B. QUALIFICATION FLOWCHART		55
APPENDIX C. HISTORY OF CHANGES		56
APPENDIX D. RECOMMENDED THICKNESS LABELS		59
APPENDIX E. LABELING GUIDELINES		60
APPENDIX F. FORMALDEHYDE		61

VOLUNTARY PRODUCT STANDARD PS 2-25

PERFORMANCE STANDARD FOR WOOD STRUCTURAL PANELS

Initially Approved as PS 2-18 March 30, 2019 (See Appendix C)
This Revision Approved October 23, 2026

(This Standard, initiated by *APA – The Engineered Wood Association,* has been developed under the Procedures for the Development of Voluntary Product Standards for the U.S. Department of Commerce.)

1 SCOPE

1.1 This Voluntary Product Standard establishes the physical properties and structural performance criteria for assessing the acceptability of wood structural panels primarily used for construction sheathing and single floor applications and provides a basis for common understanding among the manufacturers, distributors, and the users of these products. This Standard does not address non-structural issues such as resistance to biological agents. Applications other than construction sheathing and single floor may require additional engineering considerations that are not covered by this document.

1.2 This Voluntary Product Standard establishes the performance requirements, adhesive bond performance, panel construction and workmanship, dimensions and tolerances, and moisture content of wood structural panels intended for construction sheathing and single floor end uses as well as the certification and marking requirements for panels determined to conform to the requirements herein.

1.3 This Voluntary Product Standard includes test methods to determine product conformance to specified requirements and a glossary of trade terms and definitions. A product certification program is specified whereby an Accredited Product Certification Agency certifies the process used to manufacture the product, an Accredited Inspection Agency inspects and samples the product, and an Accredited Test Laboratory tests the product for conformity to the performance requirements specified in this Standard. Information regarding industry practices for reinspection is provided in Appendix A. A flowchart depicting the qualification process is provided in Appendix B. Information on the maintenance, history, and current edition of the Standard is provided in Appendix C. Recommended thickness labeling is provided in Appendix D. Information on labeling regulations from NIST Handbook 130 and Handbook 133 are provided in Appendix E. Information on formaldehyde emissions is provided in Appendix F.

1.4 This Voluntary Product Standard incorporates the International System of Units (SI) as well as U.S. customary units of measurement. The values given in SI units are the standard. The values given in U.S. customary units are for information only. In conversion of U.S. customary units where exact placement is not an issue, such as nail spacing, approximate conversions to SI units are made to yield more easily recognizable numbers. In critical matters, such as panel thickness, exact conversions to SI units are made. For nominal U.S. customary units, actual dimensions in SI units are given.

1.5 Advisory notes in this Standard shall not be considered mandatory.

2 TERMINOLOGY

2.1 Composite panel

Any panel containing a combination of veneer and other wood-based material.

2.2 Delamination

For plywood or composite panels, delamination is a visible separation between plies or layers of veneer that normally receive adhesive at their interface and are firmly contacted in the pressing operation. Wood characteristics, such as checking, leafing, splitting, and broken grain, are not to be construed as delamination.

2.3 End Use

One or more standard applications for which a wood structural panel is designed and specified under normal use conditions. For the purposes of this Standard, performance requirements for "wall," "roof," "subfloor," and "single floor" end uses are specified.

2.4 Exposure 1

Bond classification for wood structural panels suitable for uses not permanently exposed to the weather. Panels classified as Exposure 1 are intended to resist the effects of moisture on structural performance as may occur during active construction.

2.5 Exterior

Bond classification for wood structural plywood suitable for repeated wetting and redrying or long-term exposure to weather or other conditions of similar severity.

2.6 Furnish

Wood-based material that has been reduced for incorporation into conventional wood-based composites, including strands, flakes, particles, and fiber, including applied resin, wax and other additives.

2.7 Lot

A portion of production that is presented for sampling, inspection, and testing that consists of panels of the same type, within the same performance category or thickness range, and bond performance type, coming from the same production line and manufactured during a defined time period under essentially the same conditions.

2.8 Mat-formed panel

Any wood-based panel that does not contain veneer, consistent with the definition of wood structural panels. Oriented Strand Board (OSB) is a type of mat-formed panel.

2.9 Mill specification

A document that defines product specific technical requirements based on the outcomes of product evaluation results to be used for quality control purposes by the manufacturer and for ongoing conformity verification purposes by the Accredited Certification Agency, Accredited Inspection Agency, and Accredited Testing Laboratory.

2.10 Moisture resistant adhesive

Adhesive capable of bonding wood structural panels in a manner to satisfy the bond classification requirements of this Standard.

2.11 Oriented Strand Board (OSB)

An initialism for Oriented Strand Board, OSB is a type of mat-formed consisting of multiple layers of strands of wood material, bonded together with an adhesive, that is formed by the application of heat and pressure. The strands on the top and back panel surfaces are generally oriented parallel to the panel’s strength axis.

2.12 Performance Category

A panel designation related to the panel thickness range that is linked to the nominal panel thickness designations used in the International Building Code (IBC) and International Residential Code (IRC). For purposes of labeling, as defined in Section 5.2.1.2, abbreviations PERF CAT, CAT, or Category are permitted.

Advisory Note: The IBC and IRC specify a minimum 3/8 Performance Category for wall sheathing.

2.13 Performance testing

Tests that evaluate panel attributes typically required in the end-use applications as defined in this Standard.

2.14 Plywood

A panel made of sheets of veneer called plies, united under pressure by a bonding agent to create a panel with an adhesive bond between plies as strong as, or stronger than, the wood. Plywood is constructed of an odd number of layers with grain direction of adjacent layers oriented perpendicular. Layers consist of a single ply, or two or more plies laminated with parallel grain direction (e.g., parallel-laminated layers). Outer layers and all odd-numbered layers generally have the grain direction oriented parallel to the long dimension of the panel. The layer with alternating grain direction equalizes strains, reduces splitting, and minimizes dimensional change and warping of the panel.

2.15 PS 1

Voluntary Product Standard PS 1-22 “Structural Plywood.” Later versions of Voluntary Product Standard PS 1 shall be permitted provided that the requirements are applicable and consistent with governing statutes, regulations, or standards (including the IBC or IRC) relevant to the intended product end use.

2.16 Reference value

The numerical value specified in the mill specification that is established as an outcome of product evaluation (Section 6.4) for a given mechanical or physical property.

2.17 Sample

A representative part or a single item from a larger whole or group especially when presented for either inspection, testing or shown as evidence of quality.

2.18 Sample average

The average numerical test value for a sample, obtained by summing the observations and dividing by the number of tests.

2.19 Sample standard deviation

A measure of test variation calculated as:

$$S = \sqrt{\frac{\sum x^2 - \frac{(\sum x)^2}{n}}{n-1}}$$

where:

S = sample standard deviation
x = test observation
n = number of observations.

2.20 Shop-cutting panel

A panel that has been rejected as not conforming to a standard grade because of deficiencies, other than adhesive bond quality, which prevent it from conforming to the requirements of this Standard. Blistered panels are not permitted within the category of "shop-cutting panel." In plywood, localized delamination occurring as a result of a permissible characteristic as defined or referenced in Section 5.3.3.1 is permitted. Shop-cutting panels are suitable for cut-up use where cutting eliminates the deficiency in the portion of the panel salvaged. The salvageable area shall be at least 85% of the original surface area of the panel. Such a panel shall be identified with a separate mark as specified in Section 8.6.

2.21 Sized for Spacing

An optional panel mark indicating that the panel manufacturer has sized the panel to allow for industry-recommended panel installation spacing.

2.22 Span rating

An index number, based on customary inch units, that identifies the recommended maximum center-to-center support spacing for the specified end use under normal use conditions. Spans are defined for roof, wall, subfloor, and single floor end uses.

As a matter of convention, spans are typically specified singly for wall (e.g., “Wall-24”) and single floor (e.g., “Floor 24 o.c.”) end uses; whereas span ratings for roof and subfloor end uses are often combined in a fractional format. For example, a span rating of “32/16” designates a maximum roof span of 32 inches and a maximum subfloor span of 16 inches.

A span rating of 20 is designated for spans of 19.2 inches.

2.23 Specimen

An individual test piece, taken from a sample, whose properties are evaluated to gain information about the whole.

2.24 Strength axis

On the top or bottom surface of a wood structural panel, the direction parallel to the orientation of the flakes, or strands contained in the furnish or, in the case of plywood or composite panels, the direction parallel to the grain of wood veneer on the face and back surface of the panel. The strength axis is generally oriented parallel to the panel length (long edge of the panel), unless otherwise marked.

2.25 Test exposure condition

A pre-treatment condition to which a panel is subjected prior to performance testing. The following terms apply to the panel moisture conditioning used during performance testing:

(a) **Dry test condition** – Panel moisture content that is within ± 3% of the manufacturer’s specified as-shipped moisture content.

(b) **Wet test condition** – Panel moisture content after three days of continuous, one-sided wetting on the panel face.

(c) **Wet/redry test condition** – Exposure to three days of continuous one-sided wetting on the panel face followed by drying at 20 ℃ ± 3℃ (65 ℉ ± 5 ℉) and 65% ± 5% relative humidity, until the panel moisture content is within ± 3% of the manufacturer’s specified as-shipped moisture content.

(d) **As-shipped moisture content** – The expected panel moisture content when the panels are shipped from the panel manufacturer’s production facility.

2.26 Veneer

Thin sheets of wood, usually not exceeding 6.4 mm (1/4 in) thick, that are rotary cut, sliced, or sawed from a log, bolt, flitch, or block of which plywood or composite panels are made.

2.27 Wood Structural Panel

A panel product composed primarily of wood that, in its commodity end use, is essentially dependent upon certain mechanical and/or physical properties for successful end-use performance. Such a product carrying the mark of an Accredited Certification Agency shall conform to performance requirements of one or more of the end-uses contained in this Standard and, where applicable, approved by one or more national regulatory agencies for single-layer floors or for construction sheathing with respect to roofs, subfloors, and walls. Such a panel shall be identified in a manner clearly conveying its intended end use. For the scope of this Standard, wood structural panels are plywood, mat-formed panels including oriented strand board (OSB), or composite panels. The IBC and IRC use the term "wood structural panel" to refer to plywood, OSB, and composite panels that comply with either PS 1 or PS 2.

3 REFERENCE PUBLICATIONS

3.1 ASTM standards[1]

- ASTM E72-25 Standard Test Methods of Conducting Strength Tests of Panels for Building Construction
- ASTM E661-22 Standard Test Method for Performance of Wood and Wood-Based Floor and Roof Sheathing Under Concentrated Static and Impact Loads
- ASTM D1037-12 (2020) Standard Test Methods for Evaluating Properties of Wood-Base Fiber and Particle Panel Materials
- ASTM D1761-20 (2025) Standard Test Methods for Mechanical Fasteners in Wood and Wood Based Materials
- ASTM D3043-17 (2025) Standard Test Methods for Structural Panels in Flexure
- ASTM D4442-20 (2025) Standard Test Methods for Direct Moisture Content Measurement of Wood and Wood-Based Materials
- ASTM D2915-25 Standard Practice for Sampling and Data-Analysis for Structural and Wood-Based Products

3.2 Other documents

- Voluntary Product Standard PS 1-22, Structural Plywood[2]
- CSA O325-21, Construction sheathing[3]
- International Building Code (2024)[4]
- International Residential Code for One- and Two-Family Dwellings (2024)[4]
- ISO/IEC 17020-2012, Conformity Assessment – Requirements for the Operation of Various Types of Bodies Performing Inspection[5]
- ISO/IEC 17025-2017, General Requirements for the Competence of Testing and Calibration Laboratories[5]
- ISO/IEC 17065-2012, Conformity Assessment – Requirements for bodies certifying products, processes and services[5]

[1] Copies of these publications are available from ASTM International, 100 Barr Harbor Drive, PO Box C700, West Conshohocken, PA 19428-2959, www.astm.org.
[2] Copies of the current Standard are available from the Superintendent of Documents, U.S. Government Printing Office, Washington, DC 20402 and the Standards Services Division, National Institute of Standards and Technology, 100 Bureau Drive, Stop 2100, Gaithersburg, MD 20899-2100, web site: www.standards.gov.
[3] Copies of this publication are available from the Canadian Standards Association, 5060 Spectrum Way, Mississauga, ON, Canada L4W 5N6, www.csa.ca.
[4] Copies of these publications are available from International Code Council (ICC), 500 New Jersey Avenue NW, 6th Floor, Washington, DC 20001, www.iccsafe.org.
[5] Copies of these publications are available from International Organization for Standardization (ISO), Chemin de Blandonnet 8, CP 401, 1214 Vernier, Geneva Switzerland, www.iso.org.

4 CLASSIFICATION

4.1 General

The wood structural panels covered by this Standard are specified by bond classification, grade, performance category and span rating.

4.1.1 Bond classification

The bond classification is related to the moisture resistance of the adhesive bond under intended end-use conditions and does not relate to the physical (e.g., erosion, ultraviolet, etc.) or biological (e.g., bacteria, mold, fungal decay, insect, etc.) resistance of the panel. This Standard specifies requirements for wood structural panels with either Exterior or Exposure 1 bond classifications.

4.1.2 Grade

This Standard specifies requirements for standard grades of wood structural panels designed and manufactured for Sheathing, Structural I Sheathing, Single Floor and Structural I Single Floor.

4.1.2.1 Sheathing

A wood structural panel intended for use in construction applications as covering material for roofs, subfloors, and walls when fastened to joists, studs, rafters, or other supports spaced in accordance with the span rating.

4.1.2.2 Structural I Sheathing

A wood structural panel consistent with that described in Section 4.1.2.1, except that Structural I Sheathing must also conform to the additional performance requirements specified in this Standard for panel strength and stiffness measured perpendicular to the strength axis and for racking load performance.

4.1.2.3 Single Floor

A wood structural panel intended for use as combination subfloor and underlayment when fastened to joists or other supports spaced in accordance with the span rating.

4.1.2.4 Structural I Single Floor

A wood structural panel consistent with that described in Section 4.1.2.3 that also conforms to the additional requirements specified in this Standard for panel strength and stiffness measured perpendicular to the strength axis and racking load performance.

4.1.3 Span rating

An index number, based on customary inch units, that identifies the recommended maximum center-to-center support spacing for the specified end use under normal use conditions. Spans are defined for roof, wall, subfloor, and single floor end uses.

As a matter of convention, spans are typically specified singly for wall (e.g., “Wall-24”) and single floor (e.g., “Floor 24 o.c.”) end uses; whereas, span ratings for roof and subfloor end uses are often combined in a fractional format. For example, a span rating of “32/16” designates a maximum roof span of 32 inches and a maximum subfloor span of 16 inches.

4.1.4 Performance Category

A panel designation related to the panel thickness range that is linked to the nominal panel thickness designations used in the IBC and IRC. For purposes of labeling, as defined in Section 5.2.1.2, abbreviations PERF CAT, CAT or Category are permitted.

ADVISORY NOTE: The IRC and IBC specify a minimum 3/8 Performance Category for wall sheathing.

5 REQUIREMENTS

5.1 General

Wood structural panels represented as conforming to this Standard shall conform to all applicable requirements set forth herein.

5.2 General Requirements

5.2.1 Dimensional tolerances and squareness of panels

5.2.1.1 Size tolerance

A length and a width measurement shall be made at a location 50 mm to 75 mm (2 in to 3 in) from the panel edge. A tolerance of ± 1.6 mm (± 1/16 in) shall be allowed on the manufacturer's stated panel length and/or width. Where panels are marked "sized for spacing," a tolerance of plus 1.6 mm (1/16 in), minus 3.2 mm (1/8 in) shall be allowed on the manufacturer's stated length and/or width.

5.2.1.2 Performance Category and Thickness Tolerance

Panel thickness shall be measured according to the procedures defined in Section 7.12.3. For performance qualification purposes, the panel thickness shall conform to Table 1.

TABLE 1. PANEL THICKNESS REQUIREMENTS

	Thickness Requirements[a]	
PERFORMANCE CATEGORY[b]	Minimum Thickness, mm (in)	Maximum Thickness, mm (in)
1/4 PERF CAT	5.56 (0.219)	7.14 (0.281)
5/16 PERF CAT	7.14 (0.281)	8.73 (0.344)
11/32 PERF CAT	7.94 (0.313)	9.53 (0.375)
3/8 PERF CAT	8.73 (0.344)	10.32 (0.406)
7/16 PERF CAT	10.32 (0.406)	11.91 (0.469)
15/32 PERF CAT	11.11 (0.438)	12.70 (0.500)
1/2 PERF CAT	11.91 (0.469)	13.49 (0.531)
9/16 PERF CAT	13.49 (0.531)	15.08 (0.594)
19/32 PERF CAT	14.29 (0.563)	15.88 (0.625)
5/8 PERF CAT	15.08 (0.594)	16.67 (0.656)
23/32 PERF CAT	17.46 (0.688)	19.05 (0.750)
3/4 PERF CAT	18.26 (0.719)	19.84 (0.781)
13/16 PERF CAT	19.84 (0.781)	21.43 (0.844)
7/8 PERF CAT	21.11 (0.831)	23.34 (0.919)
1 PERF CAT	24.13 (0.950)	26.67 (1.050)
1-1/8 PERF CAT	27.15 (1.069)	30.00 (1.181)
1-1/4 PERF CAT	30.16 (1.188)	33.34 (1.313)

(a) Thickness requirements are based on a tolerance of ± 0.8 mm (1/32 in) for panels with Performance Categories of 13/16 and less and ± 5% for panels with Performance Categories greater than 13/16 unless a closer tolerance is determined through qualification testing.

(b) For labeling purposes, abbreviation of "Performance Category" by PERF CAT, CAT or Category is permitted. Performance Categories for other thicknesses are permitted provided the requirements in Table 1 Note (a) are met.

5.2.1.3 Squareness and straightness

Squareness

Panels shall be square within 1.3 mm per lineal meter (1/64 in per lineal foot) of the longest edge measured along the diagonals.

Straightness

All panels shall be manufactured so that a straight line drawn from one corner to the adjacent corner is within 1.6 mm (1/16 in) of the panel edge.

5.2.2 Wood materials

5.2.2.1 Veneer

Thin sheets of wood, usually not exceeding 6.4 mm (1/4 in) thick, that are rotary cut, sliced, or sawed from a log, bolt, flitch, or block of which plywood or composite panels are made. Any wood veneer used as a component of a panel shall conform to the applicable veneer grade and workmanship requirements specified in Voluntary Product Standard PS 1.

ADVISORY NOTE: Canadian Standard CAN/CSA-O325.0, which is the Canadian counterpart to PS 2, limits the maximum size of knots and knotholes to 76 mm (3 in) when measured across the grain.

5.2.2.2 Furnish

Wood-based material, that has been reduced for incorporation into conventional wood-based composites, including strands, flakes, particles, and fiber, including applied resin, wax and other additives.

5.2.3 Design and construction

Panels qualifying for a span rating are identified in three classes: plywood panels, composite panels, or mat-formed panels. See Section 2 for definitions of terms. Panels shall qualify on an individual panel construction basis for the bond classification, grade, performance category, and span rating to be identified on the panel mark upon demonstrated conformance to the appropriate requirements of Section 5.3.

5.3 Performance requirements

Wood structural panels to be marked in accordance with this Standard shall conform to the performance criteria established in three areas: structural performance, physical properties, and adhesive bond performance. The performance requirements specified in Sections 5.3.1, 5.3.2, and 5.3.3 apply to all grades of wood structural panels unless noted otherwise.

5.3.1 Structural performance

Panels shall conform to the structural performance requirements specified in Sections 5.3.1.1 through 5.3.1.4 when tested for each panel grade, and span rating in accordance with the referenced test procedure. Section 6.2.2 specifies specimen requirements and test sets.

5.3.1.1 Concentrated loads

Panels shall be tested according to the procedures specified in Section 7.1 for both concentrated static and impact loads. When sampled and evaluated according to the procedures defined in Section 6.2.2.1, panels shall conform to the criteria specified in Table 2 as applicable to the panel grade, and span rating identified on the panel mark.

Panels to be identified as Structural I Sheathing with a Performance Category of 7/16 or greater shall also be tested to evaluate performance perpendicular to the strength axis according to the procedures specified in Section 7.1. The framing members shall be oriented parallel to the strength axis direction, except the load shall be applied at panel mid-length. Minimum test panel size shall be 1,220 mm x 2,440 mm (48 in x 96 in). The framing shall be spaced 610 mm (24 in) on center (o.c.). The panel ends shall not be supported by framing. When sampled and evaluated according to the procedures defined in Section 6.2.2.1, panels shall conform to the criteria specified in Table 2 for the Roof–24 span rating.

For plywood panels, refer to Section 6.2.4.1 for additional testing requirements associated with knots and knotholes.

TABLE 2. CONCENTRATED STATIC AND IMPACT TEST PERFORMANCE CRITERIA FOR PANELS TESTED ACCORDING TO SECTION 7.1 (SEE SECTION 6.2.2.1 FOR PASS/FAIL CRITERIA)

End Use – Span Rating	Test Exposure Conditions[a]	Performance Criteria					
		Ultimate Load				Deflection Under 0.89 kN (200 lbf) Load	
		Static		Following Impact[b]			
		kN	lbf	kN	lbf	mm	in
Roof-16	Dry Wet	1.78	400	1.33	300	11.1[c][d]	0.438[c][d]
Roof-20[f]	Dry Wet	1.78	400	1.33	300	11.9[c][d]	0.469[c][d]
Roof-24	Dry Wet	1.78	400	1.33	300	12.7[c][d]	0.500[c][d]
Roof-32	Dry Wet	1.78	400	1.33	300	12.7[c][d]	0.500[c][d]
Roof-40	Dry Wet	1.78	400	1.33	300	12.7[c][d]	0.500[c][d]
Roof-48	Dry Wet	1.78	400	1.33	300	12.7[c][d]	0.500[c][d]
Roof-54	Dry Wet	1.78	400	1.33	300	12.7[c][d]	0.500[c][d]
Roof-60	Dry Wet	1.78	400	1.33	300	12.7[c][d]	0.500[c][d]
Subfloor-16	Dry Wet/Redry	1.78	400	1.78	400	4.8[c]	0.188[c]
Subfloor-20[f]	Dry Wet/Redry	1.78	400	1.78	400	5.6[c]	0.219[c]
Subfloor-24	Dry Wet/Redry	1.78	400	1.78	400	6.4[c]	0.250[c]
Subfloor-32	Dry Wet/Redry	2.45	550	1.78	400	5.3[c]	0.207[c]
Subfloor-48	Dry Wet/Redry	2.45	550	1.78	400	8.0[c]	0.313[c]
Single Floor-16	Dry Wet/Redry	2.45	550	1.78	400	2.0[e]	0.078[e]
Single Floor-20[f]	Dry Wet/Redry	2.45	550	1.78	400	2.4[e]	0.094[e]
Single Floor-24	Dry Wet/Redry	2.45	550	1.78	400	2.7[e]	0.108[e]
Single Floor-32	Dry Wet/Redry	3.11	700	1.78	400	2.2[e]	0.088[e]
Single Floor-48	Dry Wet/Redry	3.11	700	1.78	400	3.4[e]	0.133[e]

[a] Dry shall be within ± 3% of the as-shipped moisture content as specified in Section 2.25(a). Wet shall be exposure to three days continuous wetting to the panel face as specified in Section 2.25(b). Wet/Redry shall be exposure to three days continuous wetting on the panel face followed by drying as specified in Section 2.25(c).

[b] Impact shall be 102 N•m (75 lbf•ft) for span ratings up to 24, 122 N•m (90 lbf•ft) for 32, 163 N•m (120 lbf•ft) for 40, and 203 N•m (150 lbf•ft) for 48 and greater.

[c] Criteria apply under static concentrated load. Criteria do not apply following impact.

[d] Deflection after wet conditioning is not applicable.

[e] Criteria apply under static concentrated load and following impact.

[f] The “20“ span rating designation is intended for end-use spans of 19.2 in

5.3.1.2 Uniform loads

Panels shall be tested according to the procedures specified in Section 7.2 for uniform loads. When sampled and evaluated according to the procedures defined in Section 6.2.2.2, panels shall conform to the criteria specified in Table 3 as applicable to the panel grade, and span rating.

Panels to be identified as Structural I Sheathing or Structural I Single Floor shall also be tested to evaluate performance perpendicular to the strength axis according to procedures specified in Section 7.2. The framing members shall be oriented parallel to the strength axis direction as illustrated in Section 7.2.4, Figure 4. Minimum test panel size shall be 1,220 mm x 1,220 mm (48 in x 48 in). The framing shall be spaced 610 mm (24 in) o.c. The panel ends shall not be supported by framing. When evaluated according to the procedures defined in Section 6.2.2.2, panels shall conform to the criteria specified in Table 4 as applicable to the performance category and span rating.

TABLE 3. UNIFORM LOAD PERFORMANCE CRITERIA FOR SHEATHING AND SINGLE FLOOR PANELS TESTED ACCORDING TO SECTION 7.2. (SEE SECTION 6.2.2.2 FOR PASS/FAIL CRITERIA)

End Use - Span Rating	Test Exposure Conditions[a]	Performance Criteria		
		Average Deflection Under Load	Ultimate Uniform Load kPa	Ultimate Uniform Load lbf/ft^2
Wall-16[b]	Dry	6.8 mm at 1.20 kPa (0.267 in at 25 lbf/ft^2)	3.6	75
Wall-24[b]	Dry	10.2 mm at 1.20 kPa (0.400 in at 25 lbf/ft^2)	3.6	75
Roof-16[c]	Dry	1.7 mm at 1.68 kPa (0.067 in at 35 lbf/ft^2)	7.2	150
Roof-20[c][d]	Dry	2.0 mm at 1.68 kPa (0.080 in at 35 lbf/ft^2)	7.2	150
Roof-24[c]	Dry	2.5 mm at 1.68 kPa (0.100 in at 35 lbf/ft^2)	7.2	150
Roof-32	Dry	3.4 mm at 1.68 kPa (0.133 in at 35 lbf/ft^2)	7.2	150
Roof-40	Dry	4.2 mm at 1.68 kPa (0.167 in at 35 lbf/ft^2)	7.2	150
Roof-48	Dry	5.1 mm at 1.68 kPa (0.200 in at 35 lbf/ft^2)	7.2	150
Roof-54	Dry	5.7 mm at 1.68 kPa (0.225 in at 35 lbf/ft^2)	7.2	150
Roof-60	Dry	6.4 mm at 1.68 kPa (0.250 in at 35 lbf/ft^2)	7.2	150
Subfloor-16	Dry Wet/Redry	1.1 mm at 4.79 kPa (0.044 in at 100 lbf/ft^2)	15.8	330
Subfloor-20[d]	Dry Wet/Redry	1.3 mm at 4.79 kPa (0.053 in at 100 lbf/ft^2)	15.8	330
Subfloor-24	Dry Wet/Redry	1.7 mm at 4.79 kPa (0.067 in at 100 lbf/ft^2)	15.8	330
Subfloor-32	Dry Wet/Redry	2.2 mm at 4.79 kPa (0.088 in at 100 lbf/ft^2)	15.8	330
Subfloor-48	Dry Wet/Redry	3.4 mm at 3.83 kPa (0.133 in at 80 lbf/ft^2)	10.8	225
Single Floor-16	Dry Wet/Redry	1.1 mm at 4.79 kPa (0.044 in at 100 lbf/ft^2)	15.8	330
Single Floor-20[d]	Dry Wet/Redry	1.3 mm at 4.79 kPa (0.053 in at 100 lbf/ft^2)	15.8	330
Single Floor-24	Dry Wet/Redry	1.7 mm at 4.79 kPa (0.067 in at 100 lbf/ft^2)	15.8	330
Single Floor-32	Dry Wet/Redry	2.2 mm at 4.79 kPa (0.088 in at 100 lbf/ft^2)	15.8	330
Single Floor-48	Dry Wet/Redry	3.4 mm at 3.83 kPa (0.133 in at 80 lbf/ft^2)	10.8	225

[a] Dry shall be within ± 3% of the as-shipped moisture content as specified in Section 2.25(a). Wet/Redry shall be exposure to three days continuous wetting on the panel surface followed by drying as specified in Section 2.25(c).

[b] The panel strength axis shall be oriented parallel to the supports, unless otherwise specified.

[c] Panels to be identified with either a Roof-16 or Roof-20 span rating shall also conform to performance requirements for the Wall-16 span rating. Panels to be identified with a Roof-24 span rating shall also conform to requirements for Wall-24 span rating.

[d] The “20” span rating designation is intended for end-use spans measuring 19.2 in

TABLE 4. UNIFORM LOAD PERFORMANCE CRITERIA FOR STRUCTURAL I SHEATHING AND SINGLE FLOOR PANELS TESTED WITH STRENGTH AXIS PARALLEL TO SUPPORTS ACCORDING TO SECTION 7.2 (ALSO SEE SECTION 6.2.2.2 FOR PASS/FAIL CRITERIA)				
		Performance Criteria		
Performance Category and Span Rating	Test Exposure Conditions[a]	Average Deflection Under Load	Ultimate Uniform Load kPa	Ultimate Uniform Load lbf/ft^2
Structural I Sheathing				
3/8 Category 24/0	Dry	2.5 mm at 0.72 kPa (0.100 in at 15 lbf/ft^2)	3.6	75
7/16 Category 24/16	Dry	2.5 mm at 0.96 kPa (0.100 in at 20 lbf/ft^2)	4.3	90
15/32 Category 32/16	Dry	2.5 mm at 1.68 kPa (0.100 in at 35 lbf/ft^2)	6.5	135
1/2 Category 32/16	Dry	2.5 mm at 1.92 kPa (0.100 in at 40 lbf/ft^2)	7.2	150
19/32 & 5/8 Category 40/20	Dry	2.5 mm at 3.35 kPa (0.100 in at 70 lbf/ft^2)	11.5	240
23/32 & 3/4 Category 48/24 or greater	Dry	2.5 mm at 4.31 kPa (0.100 in at 90 lbf/ft^2)	14.4	300
Structural I Single Floor				
19/32 & 5/8 Category 20 o.c.	Dry	2.5 mm at 2.40 kPa (0.100 in at 50 lbf/ft^2)	8.6	180
23/32 & 3/4 Category 24 o.c. or greater	Dry	2.5 mm at 3.84 kPa (0.100 in at 80 lbf/ft^2)	13.0	270
[a] Dry shall be within ± 3% of the as-shipped moisture content as specified in Section 2.25(a).				

5.3.1.3 Wall racking

Sheathing panels that are rated for either Wall-16 or Wall-24 span rating and panels that are rated for either Roof-16, Roof-20, or Roof-24 span rating shall be tested according to the procedures specified in Section 7.3 for wall racking. When sampled and evaluated according to the procedures specified in Section 6.2.2.3, panels shall conform to the criteria specified in Table 5 for the panel grade and Performance Category.

Panels to be identified as Structural I Sheathing and Structural I Single Floor shall conform to the Structural I requirements specified in Table 5 for the Performance Category, when tested according to the procedures specified in Section 7.3 and the results evaluated according to the procedures defined in Section 6.2.2.3.

TABLE 5. RACKING LOAD PERFORMANCE CRITERIA FOR PANELS TESTED ACCORDING TO SECTION 7.3 (SEE SECTION 6.2.2.3 FOR PASS/FAIL CRITERIA)

Performance Category	Test Exposure Condition[b]	Nail Size (dia. x length)		Nail Spacing				Test Load				Performance Criteria[a]					
												Deflection @ Test Load		Ultimate Load			
				Panel Edge		Inter-mediate Studs[c]		Sheathing		Structural I Sheathing and Structural I Single Floor				Sheathing		Structural I Sheathing and Structural I Single Floor	
		mm	in	mm	in	mm	in	kN/m	lbf/ft	kN/m	lbf/ft	mm	in	kN/m	lbf/ft	kN/m	lbf/ft
Less than 5/16	Dry	2.9 x 51	0.113 x 2.0	150	6	300	12	2.2	150	---	---	5.1	0.2	9.5	650	---	---
								4.4	300	---	---	15.2	0.6				
5/16	Dry	2.9 x 51	0.113 x 2.0	75	3	300	12	5.1	350	---	---	5.1	0.2	14.3	980	---	---
3/8	Dry	3.3 x 64	0.131 x 2.5	75	3	300	12	6.0	410	6.7	460	5.1	0.2	16.8	1150	18.8	1290
7/16	Dry	3.3 x 64	0.131 x 2.5	75	3	300	12	6.6	450	7.4	505	5.1	0.2	18.4	1260	20.7	1415
15/32	Dry	3.8 x 76	0.148 x 3.0	75	3	300	12	8.8	600	9.7	665	5.1	0.2	24.5	1680	27.1	1860
19/32 and greater	Dry	3.8 x 76	0.148 x 3.0	75	3	300	12	9.7	665	9.7	665	5.1	0.2	27.1	1860	27.1	1860

[a] Stud spacing – 405 mm (16 in) o.c. for Wall-16, Roof-16, and Roof-20; 610 mm (24 in) o.c. for all other span ratings and all Structural I Sheathing and Structural I Single Floor panels.

[b] Dry shall be within ± 3% of the as-shipped moisture content as specified in Section 2.25(a).

[c] For studs spaced 610 mm (24 in) o.c., nail spacing on intermediate studs shall be 150 mm (6 in) o.c. for panels with a Performance Category of 7/16 and less.

5.3.1.4 Fastener holding

Panels shall be tested according to the procedures specified in Section 7.4 for fastener holding under both lateral and direct withdrawal loads. When sampled and evaluated according to the procedures defined in Section 6.2.2.4, panels shall conform to the criteria specified in Table 6 for the grade, and Performance Category.

TABLE 6. FASTENER PERFORMANCE CRITERIA UNDER LATERAL AND WITHDRAWAL LOADS FOR PANELS TESTED ACCORDING TO SECTION 7.4 (SEE SECTION 6.2.2.4 FOR PASS/FAIL CRITERIA)

						Performance Criteria for Ultimate Load[c]			
Grade	End Use	Performance Category	Nail Size[a] (dia. x length) mm	Nail Size[a] (dia. x length) in	Test Exposure Condition[b]	Lateral Nail holding N	Lateral Nail holding lbf	With-drawal N	With-drawal lbf
Sheathing	Wall	Through 1/2	2.9 x 51	0.113 x 2.0	Dry	778	175	[d]	[d]
		Greater than 1/2	3.3 x 64	0.131 x 2.5	Wet/Redry	600	135	[d]	[d]
	Roof	Through 1/2	2.9 x 51	0.113 x 2.0	Dry	778	175	89	20
		Greater than 1/2	3.3 x 64	0.131 x 2.5	Wet/Redry	600	135	67	15
	Subfloor	Through 1/2	2.9 x 51	0.113 x 2.0	Dry	934	210	89	20
		Greater than 1/2	3.3 x 64	0.131 x 2.5	Wet/Redry	712	160	67	15
Single Floor	Floor	Through 1/2 Greater than 1/2	2.9 x 51	0.113 x 2.0	Dry	934	210	89	20
			3.3 x 64	0.131 x 2.5	Wet/Redry	712	160	67	15

[a] Common smooth-shank nail.

[b] Dry shall be within ± 3% of the as-shipped moisture content as specified in Section 2.25(a). Wet/redry shall be exposure to three days continuous wetting on panel surface, followed by drying as specified in Section 2.25(c).

[c] Tabulated values represent the 10th percentile with 75% confidence from 20 specimens.

[d] Not applicable.

5.3.2 Physical properties

When sampled and evaluated according to the procedures defined in Section 6.2.3, panels shall conform to the performance requirements specified in Section 5.3.2.1 when tested according to the referenced test method.

5.3.2.1 Dimensional Stability

Panels shall be tested and conform to requirements of either (a) or (b) below:

a. **Exposure to 50% (± 5%) relative humidity; 21°C ± 6°C (70°F ± 10°F) and vacuum-pressure soak** – Panels shall be tested both parallel and perpendicular to the strength axis according to the procedures specified in Section 7.8 for linear expansion from 50% relative humidity to vacuum-pressure soak. The average linear expansion shall be less than or equal to 0.50% as measured according to the test method.

b. **One-sided wetting and relative humidity** – Panels shall be tested both parallel and perpendicular to the strength axis according to the procedures specified in Section 7.9 for linear expansion as measured by one-sided wetting and the procedures specified in Section 7.10 for linear expansion as measured by exposure to relative humidity. The free panel linear expansion shall be less than or equal to 0.30% when tested parallel to the strength axis and less than or equal to 0.35% when tested perpendicular to the strength axis.

5.3.3 Bond performance

Panels shall conform to the adhesive bond performance requirements specified in Sections 5.3.3.1 through 5.3.4.3 when sampled, tested and evaluated according to the procedures defined in Section 6.2.4.

5.3.3.1 Adhesive bond classification

Wood structural panels shall conform to the adhesive bond performance requirements specified below as applicable to the bond classification.

a. Exterior Plywood – Plywood rated as Exterior shall conform to PS 1 adhesive bond classification requirements for Exterior panels specified in PS 1 Section 5.7.2.

When evaluating Exterior panels for delamination, areas coinciding with open knotholes, pitch pockets, splits, gaps, and other voids or characteristics permitted in the panel grade shall be considered. A panel is considered delaminated if the area of visible ply separation at a single bond line exceeds 19.4 cm^2 (3 in^2).

b. Exposure 1 Plywood – Plywood rated as Exposure 1 shall conform to PS 1 adhesive bond classification requirements for Exposure 1 panels specified in PS 1 Section 5.7.1.

When evaluating Exposure 1 panels, delamination in any bond line shall not exceed 19.4 cm^2 (3 in^2) except where directly attributable to characteristics permitted in the grade as follows:

Delamination associated with:

- Knots and knotholes – Not to exceed the size of the knot or knothole permitted in the grade, in addition to a surrounding band not wider than 19.1 mm (3/4 in).
- All other forms of permissible grade characteristics – Not to exceed the size of the characteristic permitted in the grade.

c. Exposure 1 Composite panels - Composite panels rated as Exposure 1 shall satisfy the delamination requirements specified in Section 6.2.4.1c of this Standard when tested according to the procedures specified in Section 7.13 after moisture cycling according to the procedures specified in Section 7.17.

Delamination in Exposure 1 composite panels is any separation between a veneer-to-veneer or veneer-to-platform (e.g., OSB or other mat-formed panel) bond line, that is visible along the edge and/or end of a test specimen that has a depth exceeding 6.4 mm (1/4 in) for a continuous length of 25 mm (1 in).

d. Exposure 1 OSB – OSB panels rated as Exposure 1 shall conform to or exceed the criteria specified in Table 7 when tested according to the procedures specified in Section 7.6 after moisture cycling according to the procedures specified in Section 7.16. Alternatively, OSB can be tested according to the requirements for Exposure 1 mat-formed panels specified in Section 5.3.3.1e.

ADVISORY NOTE: Values in Table 7 are based on properties from representative industry panels that met requirements for structural performance when tested according to the procedures specified in Section 6.2.2.1 and bond performance when tested according to the procedures specified in Section 7.7 after moisture cycling according to Section 7.17.

e. Exposure 1 mat-formed panels - Mat-formed panels rated as Exposure 1 shall meet the strength retention requirements specified in Section 6.2.4.1(e) when tested according to the procedures specified in Section 7.7 after moisture cycling according to the procedures specified in Section 7.17.

TABLE 7. EXPOSURE 1 CRITERIA FOR OSB TESTED PARALLEL TO THE STRENGTH AXIS ACCORDING TO SECTION 7.6, CYCLED ACCORDING TO SECTION 7.16[a] (SEE SECTION 6.2.4.1(d) FOR PASS/FAIL CRITERIA)			
		Bending Capacity (Required Moment)	
Performance Category	End Use - Span Rating[b]	N-mm/mm	lbf-in/ft
3/8	Roof-24	310	830
7/16	Roof-24/Subfloor-16	350	950
15/32 & 1/2	Roof-32/Subfloor-16	380	1,030
19/32 & 5/8	Roof-40/Subfloor-20	450	1,210
23/32 & 3/4	Roof-48/Subfloor-24	640	1,720
9/16	Single Floor-16	390	1,060
19/32 & 5/8	Single Floor-20	420	1,130
23/32 & 3/4	Single Floor-24	610	1,650
7/8 & 1	Single Floor-32	1,000	2,690
1-1/8	Single Floor-48	1,140	3,060

[a] Bond performance may also be established using procedures specified in Section 6.2.4.1e.

[b] Panels to be identified with either a Roof-16 or Roof-20 span rating shall also meet performance requirements for the Wall-16 span rating. Panels to be identified with a Roof-24 span rating shall also meet requirements for the Wall-24 span rating.

5.3.3.2 Adhesive bond performance associated with knots and knotholes

Structural plywood rated as Exposure 1 shall satisfy the requirements specified in Section 6.3.4.4 when tested according to the procedures specified in Sections 7.18 and 7.19.

5.3.4 Adhesive performance

5.3.4.1 Adhesive mold resistance

Panel adhesive bonds shall satisfy the mold resistance performance criteria specified in Section 6.2.5.1 when test according to the procedures specified in Section 7.14. Phenolic and isocyanate-based adhesives have demonstrated resistance to attack from mold and shall be considered as conforming to this requirement.

5.3.4.2 Adhesive resistance to elevated temperature

Panel adhesive bonds shall be considered to meet elevated-temperature resistance requirements (71°C [160°F]) when tested according to the procedures specified in Section 5.3.3.1 a) - e) as applicable to the panel type and adhesive bond classification.

5.3.4.3 Adhesive bacteria resistance

Panel adhesive bonds shall satisfy the bacteria resistance performance criteria specified in Section 6.2.5.3 when tested according to the procedures specified in Section 7.15. Phenolic and isocyanate-based adhesives have demonstrated resistance to attack from bacteria and shall be considered as conforming to this requirement.

5.4 Moisture content

Moisture content of panels at time of shipment from the manufacturer and at the time of performance qualification testing shall be less than 16% as determined by Section 7.11.

6 PERFORMANCE QUALIFICATION TESTING AND MILL SPECIFICATION

6.1 General

This section specifies test specimen requirements, acceptance criteria, additional test set options, and mill specification requirements. See Appendix B for a flowchart.

6.2 Performance Qualification Testing

6.2.1 General

Performance qualification testing is a function of the panel grade and bond classification. Required tests and performance criteria are specified in Section 5. Acceptance criteria and additional test set options are specified by test in Section 6.

Panels selected for performance qualification testing shall be representative of minimum intended performance based on manufacturing specifications.

The maximum panel thickness shall not exceed the value representing the lower 50th percentile of measured panel thickness based on a random sample of not less than 20 panels taken from the lot presented by the manufacturer for performance qualification. The minimum panel thickness shall not be less than the minimum thickness requirement for the intended performance category specified in Table 1. Plywood and composite panels shall be representative of the grade and applicable panel workmanship requirements. Face and back veneers shall not be a higher grade than specified.

Performance qualification tests shall be conducted according to the application specifications of the manufacturer and the end use and span rating for which the panel is being qualified. Any special product modification that affects panel performance (e.g., moisturizing, water repellent treatment, fire or insect resistance treatment, etc.) shall be noted in the mill specification as specified in Section 6.3.

For the purposes of evaluating product conformance to the acceptance criteria specified in Sections 6.2.2 - 6.2.5, if the results of the initial test set indicate that an additional test set is required, then provisions shall be followed to test one additional test set provided no change has been made in the manufacturing process. If the results of the additional test set conform to the requirements, it shall pass the performance qualification test in question. If it does not, the product shall fail the performance qualification test. If a change in panel configuration or processing is made, additional performance qualification tests shall be conducted when required by the Accredited Certification Agency.

6.2.2 Structural performance

6.2.2.1 Concentrated loads

10 specimens (taken from at least five panels) for each test exposure condition shall be evaluated for both concentrated static and impact loads according to Section 7.1. Appropriate requirements are specified in Table 2. If additional tests are needed, they shall also consist of 10 specimens (taken from at least five panels), and the results of the two 10-specimen test sets shall be combined. Only one additional test set is allowed. If the combined results meet or exceed the minimum passing rate, the sample passes.

a. Deflection – The initial test set consists of 10 specimens.

- The average deflection shall not be greater than the appropriate requirement in Table 2 and:
- If no more than one value is above the requirement, the sample passes.
- If two or three values are above the requirement, test an additional set.
- If four or more values are above the requirement, the sample fails.
- If 10 additional specimens are tested, the combined passing rate shall be at least 85%.

b. Ultimate load – The initial test set consists of 10 specimens.

- The average load shall not be less than the appropriate requirement in Table 2, and:
- If all of the values meet or exceed the requirement, the sample passes.
- If one of the values is below the requirement, test an additional set.
- If two or more values are below the requirement, the sample fails.
- If 10 additional specimens are tested, the combined passing rate shall be at least 95%.

6.2.2.2 Uniform loads

10 specimens (taken from at least five panels) for each test exposure condition shall be evaluated for uniform-load capacity according to Section 7.2. Appropriate requirements are specified in Table 3 and Table 4 (Structural I Sheathing and Structural I Single Floor). If additional tests are needed, they shall also consist of 10 specimens (taken from at least five panels), and the results of the two 10-specimen sets shall be combined. Only one additional test set is allowed. If the combined results meet or exceed the minimum passing rate, the sample passes.

a. Deflection – The initial test consists of 10 specimens.

The average deflection shall not be greater than the appropriate requirement in either Table 3 or Table 4, and:

- If the average value is below the requirement, the sample passes.
- If the average value is above the requirement, test an additional set.
- If the average value based on combined results is above the requirement, the sample fails.

b. Ultimate load – The initial test consists of 10 specimens.

- The average load shall not be less than the appropriate requirement specified in either Table 3 or Table 4, and:
- If all of the values meet or exceed the requirement, the sample passes.
- If one of the values is below the requirement, test an additional set.
- If two or more values are below the requirement, the sample fails.
- If 10 additional specimens are tested, the combined passing rate shall be at least 95%.

6.2.2.3 Wall racking

Two wall assemblies shall be evaluated for wall racking according to the procedures specified in Section 7.3. Appropriate requirements are specified in Table 5.

If an additional test is needed, it shall consist of one wall assembly, and the results of the three tests shall be combined. Only one additional test is allowed.

a. Deflection – The initial test shall consist of two wall assemblies.

The average deflection shall not be greater than the appropriate requirement in Table 5.

- If the average value is below the requirement, the sample passes.
- If the average value is above the requirement, test one additional wall assembly.
- If the average value based on combined results is above the requirement, the wall evaluation fails.

b. Ultimate load – The initial test shall consist of two wall assemblies.

The minimum passing rate shall be 100%. If only two wall assemblies are tested, the ultimate loads shall be within 10% of each other.

- If either of the two test values is below the requirement, the sample fails.
- If the two test values meet the requirement but do not agree within 10%, test one additional wall assembly. The lower of the two test values shall be used to calculate the 10% allowance.
- If the lowest value of the three walls tested exceeds the specified minimum ultimate load, the wall evaluation passes.

6.2.2.4 Fastener holding

20 specimens (taken from at least 10 panels) for each test exposure condition and property shall be tested for lateral and direct withdrawal loads according to the procedures specified in Section 7.4. Appropriate requirements are specified in Table 6. If additional tests are needed, they shall also consist of 20 specimens (taken from at least 10 panels), and the results of the two 20-specimen test sets shall be combined. Only one additional test set is allowed.

Ultimate load – The initial test consists of 20 specimens.

- If no more than two values are below the requirement, the sample passes.
- If three or four values are below the requirement, test an additional set.
- If five or more values are below the requirement, the sample fails.
- If 20 additional specimens are tested, the combined passing rate shall be at least 90%.

6.2.3 Dimensional stability

One of the following linear expansion test methods and associated acceptance criteria shall be satisfied as specified for the grade in Section 5.3.2.1. Any special feature included by the manufacturer, such as coatings or moisture conditioning, shall be stated in the mill specification as specified in Section 6.3.

a. **Exposure to 50% (± 5%) relative humidity; 21°C ± 6°C (70°F ± 10°F) and vacuum-pressure soak –** 10 specimens (taken from at least five panels) for both parallel and perpendicular to the panel strength axis shall be conducted according to the procedures specified in Section 7.8 for linear expansion measured from 50% relative humidity to vacuum-pressure soak.

   The average linear expansion from each panel axis, as measured according to the test method from 50% relative humidity to vacuum-pressure soak, shall be no greater than specified.

   Additional tests – If the average linear expansion exceeds 0.50%, the test fails. If the average linear expansion fails to conform to the linear expansion requirement but is no greater than 0.55%, an additional test set consisting of 10 specimens (taken from at least five panels) shall be permitted for a given panel axis. If the combined average of all the specimens conforms to the specified criteria, the requirement shall be considered satisfied.

b. **Exposure to one-sided wetting and relative humidity –** 10 specimens (taken from at least five panels) for both parallel and perpendicular to the panel strength axis shall be evaluated for linear and/or thickness expansion measured from as-received to wet-one-side exposure according to the procedures specified in Section 7.9. 10 specimens (taken from at least five panels) both parallel and perpendicular to the panel strength axis shall also be evaluated for linear and/or thickness expansion measured when exposed to relative humidity change according to the procedures specified in Section 7.10.

   Each panel axis shall be evaluated separately for both pre-treatment conditions.

   - If no more than three values are above the requirement, the sample passes.
   - If four, five or six values are above the requirement, test an additional set.
   - If seven or more samples are above the requirement, the sample fails.
   - If 10 additional specimens are tested, the minimum passing rate is 70%.

   If an additional test set is needed, it shall also consist of 10 specimens (taken from at least five panels), and the results of the two 10-specimen sets shall be combined. Only one additional test set is allowed. If the combined results meet or exceed the minimum passing rate, the sample passes.

6.2.4 Adhesive bond performance

6.2.4.1 Bond classification

Bond classification tests shall be conducted as follows:

a. Exterior Plywood – Plywood rated as Exterior shall meet PS 1 adhesive bond classification requirements for Exterior panels specified in PS 1 Section 5.7.2.

b. Exposure 1 Plywood

General

Plywood rated as Exposure 1 shall meet PS 1 adhesive bond classification requirements for Exposure 1 panels specified in PS 1 Section 5.7.1.

Additional bond performance of plywood with knots and knotholes

Structural plywood with D-grade faces and/or backs rated as Exposure 1 shall be tested according to the procedures specified in Sections 7.18 and 7.19 as described in this section. Knots and/or knotholes in the samples tested shall be greater than 51 mm (2 in) but not exceeding 76 mm (3 in) in width when measured across the grain.

20 samples with knots and/or knotholes shall be prepared and tested according to the procedures specified in Section 7.18. Samples with knots and/or knotholes shall meet dry concentrated static and impact load acceptance criteria and additional test set options specified in Table 2 and Sections 6.2.2.1.(a) and 6.2.2.1.(b).

In addition, 20 samples with knots and/or knotholes shall be prepared and tested according to the procedures specified in Section 7.19. At least 95% of the samples with knots and/or knotholes shall not exhibit delamination extending radially more than 19.1 mm (3/4 in) beyond the boundary of the knot or knothole and across the width of a full sector or the continuous equivalent of the width of a full sector as measured by Section 7.19.4.

If fewer than 95% but not less than 90% of the samples fail to conform to the acceptance criteria, then one additional set of samples taken from 20 additional panels selected from the same lot shall be permitted. If 100% of the samples belonging to the additional test set conform to the acceptance criteria, the requirements shall be considered satisfied.

c. Exposure 1 Composite panels – Composite panels rated as Exposure 1 shall have one sample taken from each of at least 20 panels. From each sample, at least five specimens shall be prepared and tested according to the procedures specified in Section 7.17 and evaluated for delamination according to the procedures specified in Section 7.13 following the fourth and sixth moisture cycles.

At least 95% of the samples shall pass four moisture cycles, and 90% shall pass six moisture cycles. If more than 85% but fewer than 90% of the specimens pass six moisture cycles, then one additional test set shall be permitted. The additional test set shall consist of one sample each taken from 20 additional panels selected from the same lot. From each sample, five specimens shall be prepared and tested as specified above. The results of the initial test set and the additional test set shall be combined. If at least 95% of the samples in the cumulative sample set pass four moisture cycles, and 90% pass six moisture cycles, the bond performance requirements shall be considered satisfied.

d. Exposure 1 OSB – OSB shall satisfy the requirements of this section or the requirements of Section 6.2.4.1e.

To satisfy the requirements of this section, OSB rated as Exposure 1, shall have one sample taken from each of at least 20 panels. From each sample, at least two specimens shall be prepared and tested for strength parallel to the panel strength axis according to the procedures specified in Section 7.6 after moisture cycling according to the procedures defined in Section 7.16

If no more than one sample (average of two specimens cut from one panel) is below the minimum requirement specified in Table 7, the 20-panel test set shall be considered passing. If four or more samples are below the minimum requirement, the test set fails.

If two or three samples are below the minimum requirement, one additional test set consisting of one sample taken from 20 additional panels selected from the same lot shall be allowed. From each sample, two specimens shall be cut and tested as defined above. The combined passing rate of the 40-panel test set shall be 92.5% or greater.

e. Exposure 1 mat-formed panels – Mat-formed panels rated as Exposure 1 shall have one sample taken from each of at least 20 panels. From each sample, five specimens shall be prepared and tested for strength retention according to Section 7.7 after moisture cycling according to the procedures specified in Section 7.17. The minimum average strength retention after six moisture cycles shall be not less than 50% and no individual panel shall exhibit retained strength less than 40%. Strength retention shall be calculated using the following formula:

$$\%\,RS = \frac{P_t}{P_c} \times 100$$

where % RS = Percent retained strength of sample.
P_t = Average of five-specimen breaking load after moisture cycling.
P_c* = Average unexposed sample (five-specimen) breaking load.

*Unexposed (control) specimens shall be broken in the dry test condition (see Section 2.25).

Additional tests - If the 20-sample average strength retention conforms to the requirements, but no more than one sample fails to conform to the minimum individual panel strength retention requirement, one additional set consisting of one sample taken from 20 additional panels selected from the same lot shall be permitted. From each sample, five specimens shall be prepared and the strength retention tested as specified above. The combined passing rate of the 40-panel test set shall be 97.5% or greater.

6.2.5 Adhesive performance

6.2.5.1 Adhesive mold resistance

Four panels shall be tested according to the procedures specified in Section 7.14.

a. Plywood shall be considered to exhibit satisfactory adhesive mold resistance if each test group (see Section 7.14.3 for group definition) over the 20-week test period shows an average glueline shear load of at least 90% of the control. In addition, no more than two groups shall rate less than 80%, and no single group shall rate less than 75%.

b. Other panels shall be considered to have satisfactory mold resistance if no test group average is less than the control sample average minus 1.8 times the control sample standard deviation.

6.2.5.2 Adhesive resistance to elevated temperature

Adhesives satisfying the moisture-cycling requirements specified in Section 6.2.4.1 shall be considered to have satisfactory resistance to elevated temperature.

6.2.5.3 Adhesive resistance to bacteria

At least four panels shall be tested according to procedures specified in Section 7.15.

a. Plywood shall be considered to exhibit adhesive resistance to bacteria if each test group (see Section 7.15.2 for group definition) over the 12-week test period shows an average load of at least 80% of the control. No single group shall rate below 70% of the control.

b. Other panels shall be considered to have satisfactory bacteria resistance if no test group average is less than the control sample average minus 1.8 times the control sample standard deviation.

6.3 Mill specification

After a product has been tested and verified to conform to the appropriate performance qualification acceptance criteria specified in Section 6.2, product evaluation shall be completed according to the requirements specified in this Section 6.4 using panels obtained from the same lot supplied by the manufacturer for performance qualification testing.

As an outcome of production evaluation, a proprietary mill specification shall be written that is unique to the product and manufacturing facility. The mill specification shall be approved by the Accredited Certification Agency and shall be used for quality control purposes by the manufacturer and for ongoing conformity verification purposes by the Accredited Certification Agency, Accredited Inspection Agency, and Accredited Testing Laboratory according to the requirements specified in Section 9.

Reference values included in the mill specification shall be established as an output of product evaluation or from applicable performance requirements in this Standard. Reference values for mechanical properties shall be based on tests conducted according to the procedures specified in Sections 6.4.2.1 and/or 6.3.2.2. Alternatively, minimum industry reference values specified in Table 7 or Table 8 for small specimen bending tests applicable to OSB and other mat-formed panels may be used. When this is the case, it shall be clearly stated in the mill specification.

When approved by the Accredited Certification Agency, mill specific reference values may be determined according to methods prescribed by the Accredited Certification Agency based on the test procedures specified in Section 7.6 for OSB or Section 7.7 for other mat-formed panels.

For plywood the application of the prescriptive specifications defined or referenced in PS 1 Section 2.48 are permitted for use in lieu of reference values for quality evaluation purposes. When this is the case, it shall be clearly stated in the mill specification.

In addition to the panel characteristics specifically evaluated in Section 6.4, any unique manufacturing techniques that influence product qualification shall be included in the mill specification. This includes special coatings; heat, water or chemical treatments; overlays; additives; or other manufacturing-related activities. For plywood with D-grade faces and/or backs rated as Exposure 1, the maximum size of the knot or knothole tested according to Section 6.2.4.1(b) shall be included in the mill specification.

6.4 Product evaluation

6.4.1 Panel construction

6.4.1.1 Plywood panels

Plywood shall be defined in the mill specification as to veneer species, thickness, bond classification, grade and panel construction. The veneer and panel grade, construction and workmanship requirements specified in PS 1 Sections 5.2 through 5.8.5 shall apply as applicable to the panel grade and bond classification.

For product evaluation purposes, plywood shall be evaluated according to the requirements specified in Sections 6.4.2.1, 6.4.3, 6.4.4.3 and, if applicable, Section 6.4.4.4 of this Standard.

6.4.1.2 Composite panels

OSB or other mat-formed panels used as a platform for making composite panels shall be evaluated as specified in Sections 6.4.2, 6.4.3.1 and either Section 6.4.4.1 or 6.4.4.2 as applicable to the panel type.

In addition, the finished veneered composite panel shall be evaluated according to the provisions specified in Sections 6.4.2, 6.4.3, and 6.4.4.2.

6.4.1.3 OSB and Other Mat-formed panels

OSB and other mat-formed panels shall be evaluated as specified in Sections 6.4.2, 6.4.3 and either Section 6.4.4.1 or 6.4.4.2 as applicable to the panel type.

6.4.2 Mechanical properties

6.4.2.1 Large panel bending stiffness and strength

Bending Stiffness - Results from at least 20 tests (specimens taken from at least 10 different panels) shall be evaluated for bending stiffness both parallel and perpendicular to the panel strength axis according to the procedures specified in Section 7.5. The reference value for each panel direction shall be the lower value of a 90% confidence interval established on the mean.

Bending Strength - Results from at least 10 tests (specimens taken from at least 10 different panels) shall be evaluated for maximum bending moment both parallel and perpendicular to the panel strength axis according to the procedures specified in Section 7.5.

The reference values for each panel direction shall be the minimum observed value, or the sample average minus 1.8 times the sample standard deviation, whichever is the higher value.

6.4.2.2 Small specimen bending stiffness and strength

For OSB and other mat-formed panels, two samples shall be taken from each of at least 10 panels (20 samples total). From each sample, two specimens shall be prepared and evaluated for bending strength and stiffness both parallel and perpendicular to the panel strength axis according to the procedures specified in Section 7.6.

Reference values for Quality Assurance for OSB are specified in Table 8.

TABLE 8. QUALITY ASSURANCE MINIMUM REFERENCE VALUES FOR DRY SMALL SPECIMEN BENDING STIFFNESS AND STRENGTH TESTED ACCORDING TO SECTION 7.6, SMALL STATIC BENDING TEST[a][c]

End Use - Span Rating or Performance Category	BENDING STIFFNESS, EI x 10^3				BENDING STRENGTH, MM			
	Stress Applied Parallel to Strength Axis[b]		Stress Applied Perpendicular to Strength Axis[b]		Stress Applied Parallel to Strength Axis [b]		Stress Applied Perpendicular to Strength Axis[b]	
	N-mm^2/mm	lbf-in^2/ft width	N-mm^2/mm	lbf-in^2/ft width	N-mm/mm	lbf-in/ft width	N-mm/mm	lbf-in/ft width
Sheathing								
Roof-24	292	31	85	9	330	880	130	350
Roof-24/Subfloor-16	395	42	94	10	390	1,040	140	370
Roof-32/Subfloor-16	490	52	113	12	460	1,250	190	520
Roof-40/Subfloor-20	1,240	132	358	38	810	2,170	360	970
Roof-48/Subfloor-24	1,790	190	763	81	920	2,480	510	1,380
Structural I Sheathing								
3/8	292	31	85	9	330	880	130	350
7/16	395	42	141	15	390	1,040	220	580
15/32	490	52	245	26	460	1,250	320	860
1/2	490	52	273	29	460	1,250	330	900
19/32 & 5/8	1,240	132	471	50	810	2,170	500	1,360
23/32 & 3/4	1,790	190	763	81	920	2,480	650	1,760
Single Floor								
Single Floor-16	876	93	198	21	650	1,740	230	630
Single Floor-20	1,110	118	264	28	710	1,910	240	650
Single Floor-24	1,600	170	546	58	910	2,450	320	850
Single Floor-32	4,170	443	1,270	135	1,570	4,240	600	1,610
Single Floor-48	8,660	920	2,110	224	2,080	5,600	820	2,200

[a] Test criteria shall not be used for design properties.
[b] The strength axis is parallel to the face and back orientation of the flakes or strands unless otherwise indicated on the panel marking.
[c] Other reference values may be established through acceptable performance based on procedures in Section 6.2.2.1.

ADVISORY NOTE: Reference values specified in Table 8 are based on properties and statistical limits from representative industry samples that were tested and verified to conform to the structural performance acceptance criteria specified in Section 6.2.2.1 and Table 2. Reference values for other mat-formed panels should be based on the statistical principles specified in Section 6.4.4.2.

6.4.3 Physical properties

6.4.3.1 Panel thickness

Finished panel thickness shall be evaluated on each of 20 panels according to the procedures specified in Section 7.12. The reference value shall be the sample average less 1.932 times the sample standard deviation (the 95% lower tolerance limit at 75% confidence as referenced in ASTM D2915).

If more than 20 panels are evaluated, the appropriate K-factor shall be applied as specified in ASTM D2915.

6.4.3.2 Moisture content

Panel moisture content shall be measured on one specimen taken from each of 20 panels according to the procedures specified in Section 7.11. The reference value shall be the highest observed value, not to exceed 16% as specified in Section 5.4 of this Standard. A moisture content reference value shall be established either at the discretion of the Accredited Certification Agency or when needed to assure ongoing product conformity to the dimensional stability performance criteria specified in Section 5.3.2.1 when tested according to the procedures in Section 6.2.3.

6.4.3.3 Linear expansion

Reference values for linear expansion shall be based on specimens taken from at least 20 panels prepared and tested according to either Procedure A or Procedure B of Section 7.8.

If the average linear expansion based on Procedure A exceeds 0.50%, reference values shall be based on specimens taken from 20 panels evaluated according to Section 7.8.2.1. The reference value shall be the highest observed value, or the sample average plus 1.8 times the sample standard deviation, whichever is the lower value. If Procedure B is used, the reference value shall be 0.50%.

For composite panels and for mat-formed panels containing non-oriented furnish, one specimen measuring 75 mm x 300 mm (3 in x 12 in) shall be prepared perpendicular to the machine direction only from each panel to be tested.

For OSB and other mat-formed panels containing oriented furnish, one 75 mm x 300 mm (3 in x 12 in) specimen parallel and one perpendicular to the panel strength axis shall be prepared from each panel to be tested. Separate reference values shall be established for both the parallel and perpendicular directions according to the procedures specified in Section 7.8.2.1 Procedure A.

6.4.4 Adhesive bond properties

6.4.4.1 Exposure 1 bond performance for OSB

Bond performance reference values for OSB shall be based on the tabulated values in Table 7 or established based on samples taken from at least 20 panels and evaluated parallel to the strength axis according to either:

a) Section 7.6 after cycling according to Section 7.16, or;

b) The procedures specified in Section 6.4.4.2.

6.4.4.2 Exposure 1 bond performance for composites and mat-formed panels.

For composite panels and mat-formed panels classified as Exposure 1, a minimum of 20 samples, one taken from each of 20 panels, shall be moisture cycled according to the procedures specified in Section 7.16 (single cycle soak-dry test) using specimens described in Section 7.7.

In addition, for composite and mat-formed panels classified as Exposure 1, a minimum of 20 samples, one taken from each of 20 panels, shall be moisture cycled according to the procedures specified in Section 7.17 (6-cycle test) using specimens described in Section 7.7.

Immediately after moisture cycling, composite panel test specimens shall be evaluated for delamination according to the procedures specified in Section 7.13. Moisture-cycled samples shall then be tested according to the procedures specified in Section 7.7. The individual panel reference value for each qualification shall be the lowest observed breaking load (five-specimen average) or the sample average minus 1.8 times the sample standard deviation, whichever is the higher value. In addition, for Exposure 1 panels tested according to Sections 7.16 and 7.7, the lower 90% confidence interval shall be established on the qualification average.

6.4.4.3 Bond performance of plywood panels

Reference values for bond performance of Exterior plywood panels shall be as specified in Section 6.2.4.1 (a).

Reference values for bond performance of Exposure 1 plywood panels shall be as specified in Section 6.2.4.1.(b).

6.4.4.4 Bond performance associated with knots and knotholes for plywood rated Exposure 1

Reference values for bond performance associated with knots and knotholes for plywood rated as Exposure 1 and made with D-grade faces and/or backs shall be as specified in Section 6.2.4.1b. when tested according to Section 7.19.

ADVISORY NOTE: Assessment of bond performance associated with knots and knotholes for manufacturer quality control and for inspections conducted by the Accredited Inspection Agency should be done when a maximum-sized knot or knothole appears in the routine panel sampling and inspection conducted according to Section 9 of this Standard. When available, samples should be tested according to Section 7.19 and evaluated according to the acceptance criteria specified in Section 6.2.4.1 b.

Exterior bond plywood panels are exempt from this requirement based on their bond classification.

7 TEST METHODS

7.1 Concentrated static and impact load test

ASTM E661 shall be followed except as modified in this section.

The test span shall be 19.2 inch for the span rating of 20.

Test exposure conditions shall be as specified in Table 2 and Section 2.25 as applicable to the panel grade, end use and span rating to be identified on the panel marking.

7.1.1 Specimen preparation

Samples shall be selected that are represent ative of minimum intended performance based on manufacturing specifications (see Section 6.2.1). The required number of test specimens shall be as specified in Section 6.2.2.1.

Specimens shall be prepared for testing according to ASTM E661 except that PS 2, Section 6.2.2.1 shall be followed with regard to the number of specimens to be tested.

Specimens shall be subjected to applicable test exposure conditions before testing.

7.1.2 Test procedure

Concentrated static – The procedures specified in ASTM E661 shall be followed, except the test frame shall be constructed of lumber with nails or of steel using fasteners that simulate nails. The loading rate shall be 445 N (100 lbf) per 30 seconds to yield failure within five minutes.

Concentrated impact – ASTM E661, Procedure A shall be followed, except:

- A test frame of steel rather than lumber, using fasteners that simulate nails, is permitted.
- For span ratings greater than 24, the shot bag shall weigh 27 kg (60 lbs).

Individual panel pieces shall be 610 mm (24 in) wide or greater for span ratings up to 24 o.c., and 1,220 mm (48 in) wide for span ratings greater than 24.

7.2 Uniform load test

7.2.1 General

This method shall determine the performance of wood structural panels under uniform loads such as snow, wind and occupancy loads. The uniform load is applied by atmospheric pressure created by drawing a vacuum under the test specimen which is mounted on fully supported framing members in a vacuum chamber.

7.2.2 Equipment

Vacuum chamber – The vacuum chamber (see Figures 1 and 2) shall consist of a sealed box with the panel to be tested forming the top. A 0.15-mm (6-mil) polyethylene sheet or equivalent, the perimeter of which shall be attached securely with tape or similar means, shall seal the top surface of the vacuum chamber. The chamber shall be strong and rigid to resist the applied load without failure or excessive deformation. A vacuum pump shall be used to reduce the air pressure under the specimen. The load shall be measured with absolute pressure gages for electronic data readout, but manometers or vacuum gages shall also be permitted.

Joist supports – The framing members shall be spaced at the intended span rating, except that the 20-span rating shall have the framing spaced 19.2 inches on center. Framing shall be supported so as to resist deflection or rotation under applied load.

Deflection gages – The deflection gages shall be mounted to rigid tripods whose legs shall rest above the joists. Deflection shall be measured to the nearest 0.03 mm (0.001 in).

Figure 1. Vacuum Test Chamber Equipment

Diagram shows strength axis perpendicular to supports.

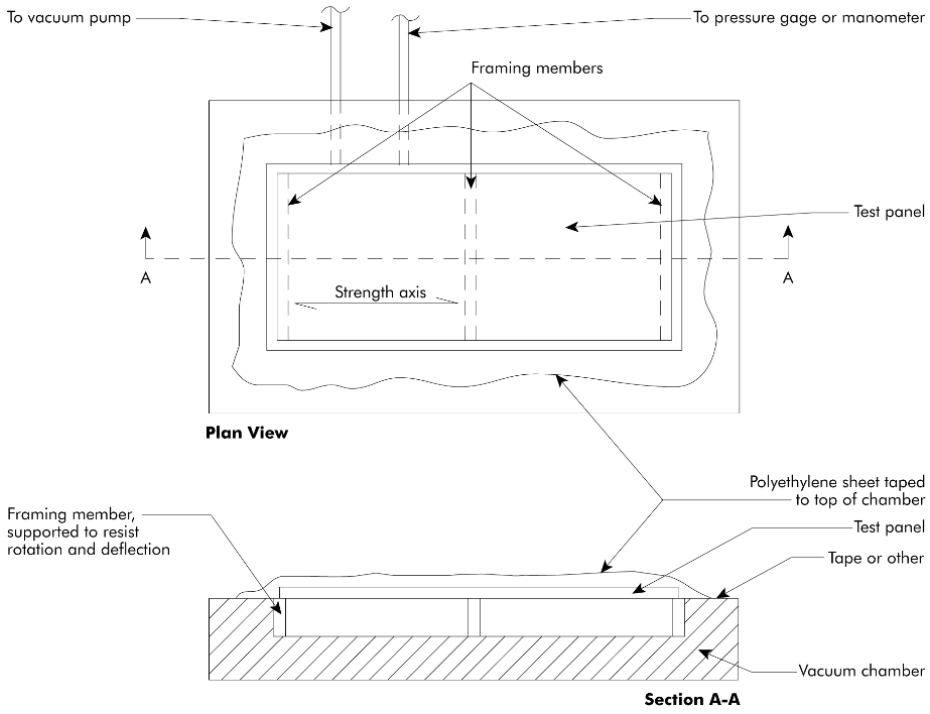

Figure 2. Vacuum Test Chamber Equipment

Diagram shows strength axis parallel to supports.

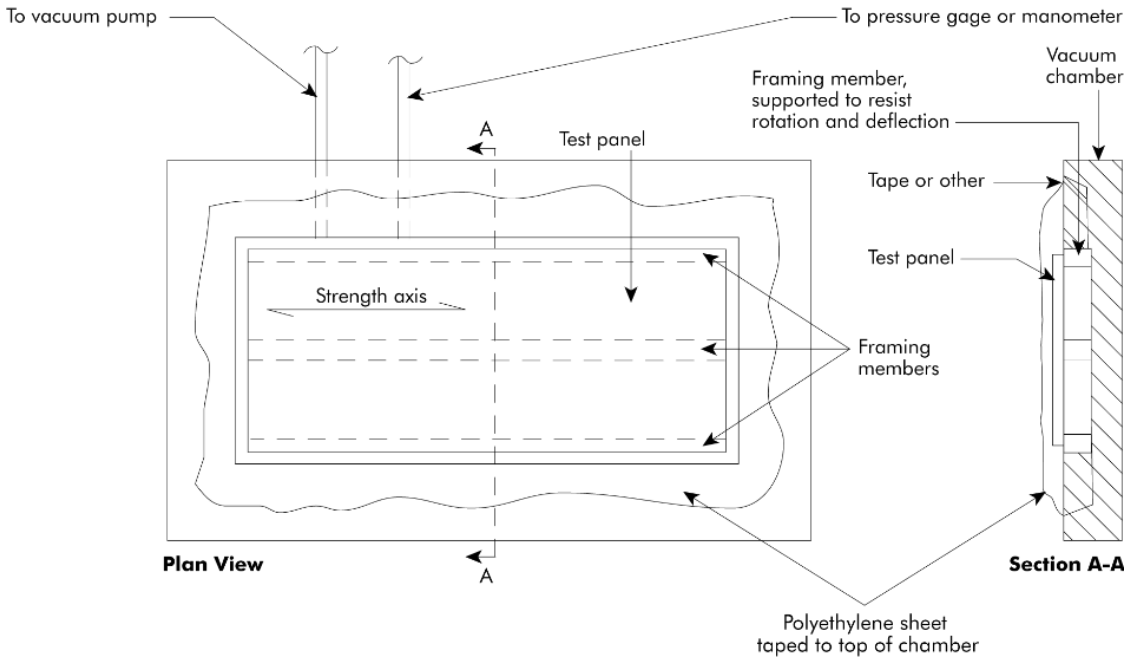

7.2.3 Specimen preparation

Samples shall be selected that are representative of minimum intended performance based on manufacturing specifications (see Section 6.2.1). The required number of test specimens shall be as specified in Section 6.2.2.2.

Length – The specimen length perpendicular to the framing members shall be equal to twice the center-to-center spacing.

Width – The specimen width shall be at least 595 mm (23.5 in).

Thickness – The specimen thickness shall be measured and recorded after conditioning.

Conditioning –Test exposure conditions shall be as specified in Table 3 and Section 2.25 as applicable to the panel grade, end use and span rating to be identified on the panel marking. Specimens shall be subjected to applicable test exposure conditions before testing.

7.2.4 Test procedure

Following preparation of specimens as specified in Section 7.2.3, the specimen to be tested shall be mounted on framing members in the vacuum chamber in accordance with the anticipated joist spacing and the recommended nail size and spacing. The top of the vacuum chamber shall then be sealed with the polyethylene sheet, and the tripod holding the deflection gages are set in its proper position with the gages positioned to read deflection at the point of maximum deflection[6] within the two outer spans (Figures 3 and 4).

The panel shall be loaded at a uniform rate of 2.4 kPa (50 lbf/ft^2) per minute, recording deflections at 1.2 kPa (25 lbf/ft^2) increments until maximum load is achieved or until the desired proof load

[6]The point of maximum deflection for a uniformly loaded two-span system occurs at 0.4215 times (S) measured from the centerline of the outer joist, where S equals the center-to-center joist spacing.

is achieved as required. Deflection data shall be required only in sufficient numbers to develop the straight-line portion of the load-deflection curve. In no case shall the number of data points be less than six. Deflection at a given load shall be determined by translating the slope to pass through the origin, thereby correcting for any settling of the system.

Figure 3. Uniform Load Test Specimen

Diagram shows strength axis perpendicular to supports.

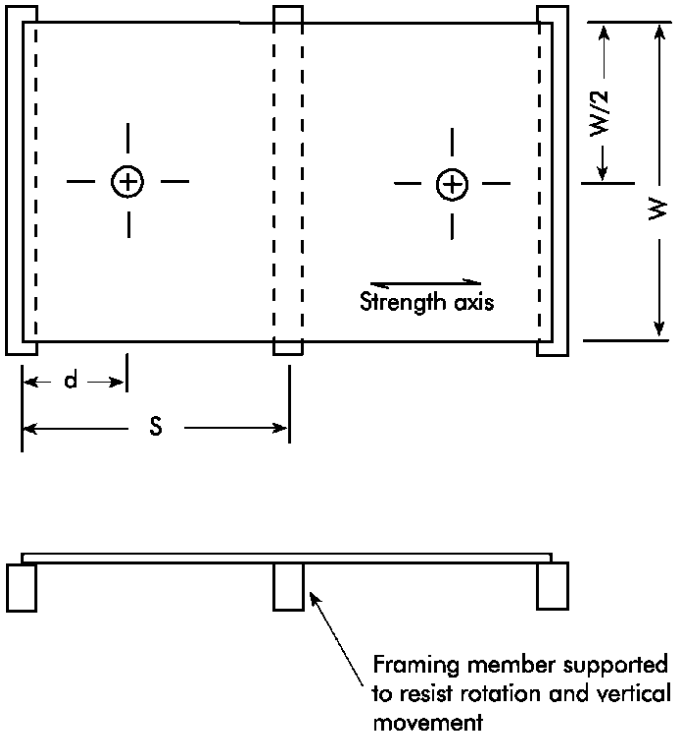

S = Center-to-center support spacing.
d = 0.4215(S) for two span.
W = Panel width, minimum = 595 mm (23.5 in.).
⊕ = Location of deflection measurement

Figure 4. Uniform Load Test Specimen

Diagram shows strength axis parallel to supports.

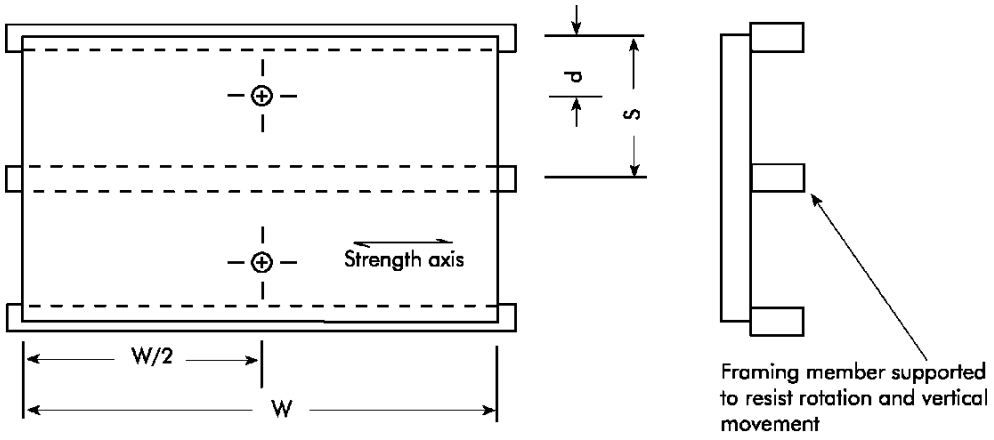

S = Center-to-center support spacing.
d = 0.4215(S) for two span.
W = Panel width, minimum = 595 mm (23.5 in.).
⊕ = Location of deflection measurement

7.3 Wall racking load test

7.3.1 General

The principles of ASTM E72, Section 14 for racking load shall be followed.

7.3.2 Specimen preparation

Samples shall be selected that are representative of minimum intended performance based on manufacturing specifications (see Section 6.2.1). The required number of test specimens shall be as specified in Section 6.2.2.3.

A test specimen shall consist of a wall assembly measuring 2.4 m x 2.4 m (8 ft x 8 ft) prepared as specified in ASTM E72, except that the 89 mm x 89 mm (nominal 4 in x 4 in) timber attached to the upper plate shall be reinforced with a 100 mm x 150 mm (4 in x 6 in) steel tube to prevent excessive deformation.

Stud framing shall be Douglas-fir or southern pine stud grade, with a moisture content of 15% or less. Nail size and spacing shall be as specified in Table 5. When 3.8 mm x 76 mm (0.148 in x 3.0 in) nails are used, 64 mm (nominal 3 in) wide framing shall be used for the center stud (at panel joint) to prevent splitting of the framing member.

Specimens shall be tested in the dry condition (see Table 5, footnote b).

7.3.3 Test procedure

Load shall be applied continuously at a uniform rate of load. The rate of loading shall be chosen such that the 1-times test load is reached in not less than two minutes. The loading rate for the subsequent loading cycles shall be the same as the 1-times test load cycle.

Four deflection gages shall be positioned on the test specimen as specified in ASTM E72, Section 14.3 and Figure 7. Deflection measurements shall be recorded as the wall is being loaded. At least 10 sets of uniformly spaced deflection readings shall be taken prior to failure to establish the load-deformation curve. At 1-times and 2-times the test load specified in Table 5, the load shall be removed, and the wall shall be allowed to recover for five minutes. At 2.5 times the test load, the deflection gages may be removed, and the wall shall be loaded to failure.

Deflection shall be reported after removing panel uplift, base slip, and crushing components from the total deflection measurement as specified in ASTM E72, Section 14.5. Ultimate load shall be recorded.

7.4 Fastener-holding resistance test

7.4.1 General

Lateral fastener holding tests measure the single-shear resistance of a nail to lateral movement of the panel. The procedure generates data that are to be compared to data from other panel products, but the procedure shall not be used to produce joint design information.

Direct withdrawal loads shall also be measured.

7.4.2 Specimen preparation

Samples shall be selected that are representative of minimum intended performance based on manufacturing specifications (see Section 6.2.1). The required number of test specimens shall be as specified in Section 6.2.2.4.

Conditioning – Prior to testing, specimens shall be conditioned as specified in Table 6 and Section 2.25.

Lateral loads – Each specimen shall measure 150 mm x 150 mm (6 in x 6 in). To serve as test points, four points shall be marked on the centerline of each specimen axis, 25 mm (1 in) in from each edge.

Nail size shall be as required in Table 6. After conditioning, nails shall be driven through the test specimen perpendicular to the panel face. Nail penetration shall be such that the nail head lies flush with the panel face. If needed, a backing shall be used to prevent the nail from tearing away the back side of the test specimen during driving. All nails shall be driven immediately before testing.

Direct withdrawal loads – Test specimens shall be any convenient size (not less than 75 mm x 150 mm (3 in x 6 in) trimmed from the lateral resistance specimens.

Nail size shall be as required in Table 6. After conditioning, nails shall be driven through the test specimen perpendicular to the panel face. At least 12 mm (1/2 in) of the shank portion of the nail shall project above the surface of the test specimen. If needed, a backing shall be used to prevent the nail from tearing away the back side of the test specimen during driving. All nails shall be driven immediately before testing.

7.4.3 Test procedure

Lateral loads – The fastener shall be loaded in single shear. Apparatus similar to that shown in Figure 5 shall be employed. The nail shank shall be rigidly clamped. Rollers shall be present to ensure vertical movement by providing lateral restraint to the panel. Load shall be applied through a yoke-type loading head. One such loading head is illustrated in Figure 5.

The test specimen shall be loaded continuously throughout the test by uniform motion of the movable crosshead of the test machine at a rate of 5 mm (0.2 in) per minute.

Direct withdrawal loads

The method of loading shall be as specified in ASTM D1761, Sections 4 through 13.

The specimen shall be loaded continuously throughout the test by uniform motion of the movable head of the testing machine at a rate of 5 mm (0.2 in) per minute.

Figure 5. Exploded View of Test Apparatus for Measuring the Lateral Nail-Holding Capacity of Structural Panel Products

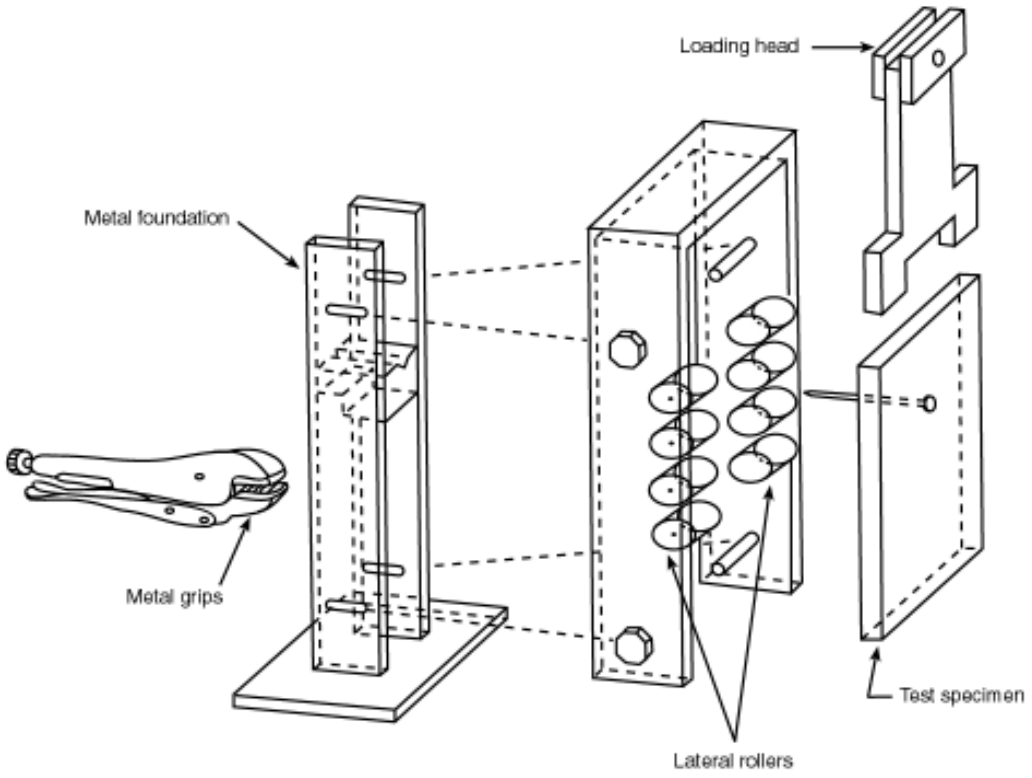

7.5 Large panel bending test

7.5.1 General

This test procedure determines large panel bending strength and stiffness. The general provisions of ASTM D3043, Method C shall be followed.

7.5.2 Specimen preparation

The required number of test specimens shall be as specified in Section 6.4.2.1.

Specimens shall be prepared according to ASTM D3043, Method C, except specimen sizes not less than 310 mm x 1,220 mm (12 in x 48 in) shall be permitted.

7.5.3 Test procedure

The procedures of ASTM D3043, Method C shall be followed except specimens shall be tested for stiffness both parallel and perpendicular to the panel strength axis, and maximum bending moment shall be determined as required.

7.6 Small static bending test for OSB

7.6.1 General

This test is intended to develop bending strength and stiffness information to be used for quality assurance purposes. The test method follows the principles of ASTM D3043, Method D. The information developed shall not be considered as appropriate for the purposes of developing design data.

7.6.2 Specimen preparation

Specimens shall be cut from each sample according to the requirements specified in ASTM D3043 Section 8.2, except that specimen width shall be 115 mm (4.5 in).

7.6.3 Test procedure

The principles of ASTM D3043 Section 8 shall be followed, except that specimens shall be cut to the following length:

- 355 mm (14 in) for panels with Performance Category of 1/2 and less,
- 510 mm (20 in) for panels with Performance Category greater than 1/2 up to 3/4,
- 610 mm (24 in) times the nominal panel thickness plus 50 mm (2 in) for panels with Performance Category greater than 3/4.

7.7 Small static (25 mm x 125 mm [1 in x 5 in]) bending test for composites and mat-formed panels

7.7.1 General

This test is intended to develop strength information that acts as a measure of bond integrity. The test shall be performed on both control and moisture-cycled specimens.

7.7.2 Specimen preparation

Fifteen (15) test specimens measuring 25 mm x 125 mm (1 in x 5 in) shall be cut from each sample to be tested (15 specimens each oriented parallel and perpendicular to the panel strength axis in the case of panels that exhibit directional properties). Side-by-side matching shall be observed for comparison of control, single-cycle and six-cycle exposures.

Specimens prepared from panels containing veneer shall be cut with the grain of the veneer oriented parallel to the 125 mm (5 in) dimension.

Specimens prepared from mat-formed panels shall be cut so the 125 mm (5 in) dimension is oriented parallel to the panel strength axis except for panels exhibiting directional properties, in which case five specimens shall be cut both parallel and perpendicular to the panel strength axis. Specimens shall be tested after appropriate conditioning.

7.7.3 Test procedure

Each specimen shall be tested as a beam across a 100 mm (4 in) clear span. The loading head and supports shall measure 19.1 mm (3/4 in) in diameter. The load shall be applied at mid-span at a rate not to exceed 25 mm (1 in) per minute until failure occurs.

Specimens from veneered composite panels shall be oriented so the thickness of the specimen acts as the depth of the beam. Specimens from mat-formed panels shall be oriented so the 25 mm (1 in) cut dimension acts as the depth of the beam and the panel thickness acts as the beam width.

The breaking load for each specimen shall be measured to ±4.4 N (±1 lbf). The average breaking load for each panel and for each test condition (e.g., control, single cycle, or six cycle exposures) shall be calculated. In the case of panels that exhibit directional properties, separate averages shall be determined for each specimen direction (e.g., parallel and perpendicular to panel strength axis).

7.8 Linear expansion test measured from oven-dry or 50% relative humidity to vacuum-pressure soak

7.8.1 General

This test method evaluates the dimensional stability of a panel.

7.8.2 Specimen preparation

Samples shall be selected that are representative of minimum intended performance based on manufacturing specifications (see Section 6.2.1). The required number of test specimens shall be as specified in Section 6.2.3 (a).

Test specimens shall measure at least 75 mm (3 in) wide by at least 300 mm (12 in) long and prepared for both panel directions (e.g. parallel and perpendicular to the panel strength axis).

Specimens shall be selected to avoid large characteristics such as knotholes, knots, or splits in the outer veneers (when veneers are present), especially near the eyelet locations. Otherwise, normal grade features shall be included as they occur.

Fixed reference points that serve as measuring points on the centerline of each specimen shall be located 25 mm (1 in) in from each end. Brass eyelets placed in pre-bored holes have been found to be suitable reference points. Use of the reference measuring points shall permit determination of linear expansion independent of any additional swelling that might take place at the exposed panel edge.

7.8.2.1 Test procedure

Specimen pre-conditioning:

Procedure A

Specimens shall be oven-dried at 103 ± 2 °C (217 ± 4 °F) for 24 hours or until constant weight is attained. Constant weight shall be assumed when consecutive readings taken at least two hours apart agree within 0.2%.

Procedure B

Specimens shall be conditioned at 50% ± 5% relative humidity and 21 ± 6 °C (70 ± 10°F) until constant weight is attained. Constant weight shall be assumed when consecutive readings taken at least 24 hours apart agree within 0.2%.

Measurement and vacuum-pressure soak cycle:

After pre-conditioning using either Procedure A or B, the specimen shall then be placed in a flattening jig to remove any out-of-plane distortions, and the distance between gage points shall be measured to the nearest 0.025 mm (0.001 in) with a bar-type trammel equipped with a dial gage or equivalent instrument.

After completing the pre-conditioned measurements, specimens shall be placed in a pressure vessel, flooded with 18 ± 6°C (65 ± 10°F) tap water and subjected to a vacuum of 91 ± 7 kPa (27 ± 2 inches of mercury) for one hour (time shall not begin until full vacuum is achieved). Specimens shall then be subjected to two hours of atmospheric pressure. After the vacuum-pressure soak, specimens shall be removed from the vessel and remeasured for length.

Expansion values shall be calculated as a percentage of the pre-conditioned (oven-dry or relative humidity) dimension, as given in the following equations:

Calculation:

Procedure A (oven-dry)

$$\text{Percent Change} = \frac{L_w - L_d}{L_d} \times 100$$

where: L_w = dimension saturated after vacuum-pressure soak
L_d = dimension oven-dry

Procedure B (relative humidity)

$$\text{Percent Change} = \frac{L_w - L_{50\%}}{L_{50\%}} \times 100$$

where: L_w = dimension saturated after vacuum-pressure soak
$L_{50\%}$ = dimension equilibrated at 50% RH.

7.9 Linear expansion and thickness swell test measured after wetting one side

7.9.1 General

This test is designed to measure linear expansion and edge thickness swell.

7.9.2 Specimen preparation

Each 1,220 mm x 1,220 mm (48 in x 48 in) specimen shall have only one cut edge; the remaining three edges being as prepared by the manufacturer. To serve as measuring points for linear expansion, brass eyelets shall be placed in four pre-bored holes located on the centerline of each specimen axis, 25 mm (1 in) in from each edge. This shall result in a nominal 1,170 mm (46 in) gage distance both parallel and perpendicular to the panel strength axis.

Additionally, points shall be marked on each uncut side of the specimen for thickness swell evaluation.

Moisture content (oven-dry basis) shall be measured according to Section 7.11 prior to testing using a panel selected from the same lot. If the moisture content of the specimens exceeds 12%, the specimens shall be conditioned to constant weight at 20 ± 3°C (68 ± 6°F) and 65 ± 5% relative humidity until constant weight is achieved. Constant weight shall be assumed when consecutive readings taken at least 24 hours apart agree within 0.2%.

7.9.3 Test procedure

Linear expansion specimens shall be placed in a flattening jig to remove any out-of-plane distortions, and the distance between gage points shall be measured to the nearest 0.025 mm (0.001 in) using a bar-type trammel equipped with a dial gage or equivalent instrument.

Thickness shall be measured along each uncut side of the specimen to the nearest 0.025 mm (0.001 in) according to the procedures specified in Section 7.12.

After completing these pre-test measurements, unrestrained specimens shall be mounted within 30 degrees of vertical and subjected to continuous one-sided wetting on the panel face with water at 18 ± 6°C (65 ± 10°F).

The period of continuous wetting shall be 14 days. No liquid water shall impinge on the panel back, however, the back shall be exposed to any water vapor present. All factory edges shall be exposed to water except the freshly-cut edge. The cut edge shall be the top edge, and protection with an edge sealer shall be permitted. After wet exposure, the specimens shall be remeasured.

Expansion values shall be calculated to express results as a percentage of the original dimension, as given in the equation:

$$\text{Percent Change} = \frac{L_w - L_{ar}}{L_{ar}} \times 100$$

where: L_w = dimension saturated
L_{ar} = dimension pre-test (less than 12% MC).

7.10 Linear expansion and thickness swell test measured by exposure to relative humidity

7.10.1 General

This method measures linear expansion as specified in ASTM D1037, Section 24.

Thickness swell, if applicable, shall be measured as specified in Sections 7.10.2 and 7.10.3.

7.10.2 Specimen preparation

Samples shall be selected that are representative of minimum intended performance based on manufacturing specifications (see Section 6.2.1). The required number of test specimens shall be as specified in Section 6.2.3 (b).

From each sample, two specimens shall be cut according to the procedures specified in ASTM D1037, Section 24 except that test specimens shall measure 75 mm (3 in) wide by 1,040 mm (41 in) long. Shorter lengths shall be permitted, but specimens shall not measure less than 300 mm (12 in) long.

To serve as measuring points for linear expansion, brass eyelets shall be placed in pre-bored holes on the centerline of each specimen, 25 mm (1 in) in from each end. This shall result in a nominal 990 mm (39 in) gage distance.

Additionally, points shall be selected and marked on the centerline of the specimen at a point located 75 mm (3 in) in from each end to serve as measuring points for thickness swell.

7.10.3 Test procedure

The procedures specified in ASTM D1037, Section 24, shall be followed for linear expansion testing, except that specimens shall be placed in a flattening jig to remove any out-of-plane distortions, and the distance between gage points shall be measured to the nearest 0.025 mm (0.001 in) with a bar-type trammel equipped with a dial gage or equivalent instrument. Thickness shall be measured to the nearest 0.025 mm (0.001 in) using a micrometer, that complies to the specifications defined in Section 7.12.

Linear expansion and thickness swell values shall be calculated to express results as a percentage of the 50% conditioned dimension, as given in the equation:

$$\text{Percent Change} = \frac{L_{90} - L_{50}}{L_{50}} \times 100$$

where: L_{90} = dimension equilibrated at 90% RH
L_{50} = dimension equilibrated at 50% RH.

7.11 Panel moisture content determination

7.11.1 General

This procedure defines the method of determining panel moisture content by the oven-dry method according to the principles of ASTM D4442, Method B.

7.11.2 Specimen preparation

From each panel, a specimen shall be cut from a location at least 50 mm (2 in) from any edge. Specimens shall measure not less than 150 mm x 150 mm (6 in x 6 in).

7.11.3 Test procedure

The procedures defined in ASTM D4442, Method B shall be followed except that, for the purposes of determining End Point, constant weight shall be achieved when consecutive readings taken at least two hours apart agree within 0.2%.

The moisture content shall be calculated as:

$$M = \left[\frac{W_w - W_d}{W_d} \right] 100$$

where:

M = Moisture content (percent)
W_w = Initial weight (grams or similar units)
W_d = Oven-dry weight (grams or similar units).

7.12 Panel thickness determination

7.12.1 General

This method defines the procedure for determining panel thickness.

7.12.2 Specimen preparation

Panel condition at the time of measurement shall be noted.

7.12.3 Measurement method

Panel thickness shall be measured using a micrometer having an anvil diameter measuring 19.1 mm (3/4 in) minus 0, plus 1.3 mm (0.050 in). Measurements shall be taken at an applied anvil pressure of not less than 34 kPa (5 psi) or more than 69 kPa (10 psi).

The location of the measurements shall be representative of panel thickness mid-length, ± 50 mm (2 in) along each edge of the panel and the average of the four measurements shall be taken as the thickness of that panel. If a measurement point contains a permissible grade characteristic that affects panel thickness, then the measurement point shall be shifted from that point.

7.13 Probe test for delamination

7.13.1 General

This procedure defines a method for evaluating delamination in composite panels.

7.13.2 Equipment

The probe used shall measure 6.4 mm (1/4 in) wide at the tip by 0.3 mm (0.012 in) thick and shall increase in thickness to about 0.64 mm (0.025 in) at a position located 12 mm (1/2 in) from the tip. The 6.4 mm (1/4 in) width shall increase to a width of 16 mm (5/8 in) at a position located 25 mm (1 in) from the end. The probe shall be of any convenient length. The tip of the probe shall be squared off and not sharp so that when probing delaminated areas, wood fibers across the delaminated area will not be cut.

7.13.3 Specimen preparation

Five specimens measuring 25 mm x 125 mm (1 in x 5 in) shall be cut with the wood grain of the outer plies oriented parallel to the 125 mm dimension. Care should be taken to avoid knots, knotholes and other voids permitted in the grade.

Measurement of delamination shall take place prior to any mechanical test or moisture cycling and again after any mechanical test or moisture cycling.

7.13.4 Test procedure

Delamination shall be evaluated according to the following procedure:

The specimen shall be examined visually for delamination. Any separations in the specimen periphery in veneer-to-veneer or veneer-to-wood-based panel material glueline shall be probed to determine the depth of delamination. A separation that measures 6.4 mm (1/4 in) deep for a continuous length of 25 mm (1 in) or more shall be considered as having failed the test for delamination. Use of slight pressure is necessary when inserting the probe into the delaminated areas. The pressure shall be limited to that which is applied by gripping the probe between the thumb and first finger. In no case shall any prying action be used.

The number of specimens failing this test shall be reported as required.

7.14 Adhesive mold test

7.14.1 General

This method determines if an adhesive system possesses sufficient resistance to mold attack to retain bond integrity under conditions that promote mold growth.

7.14.2 Equipment

Cabinets shall be used to house test specimens under mold-producing conditions. Each cabinet shall be divided into three interconnected compartments with adjustable specimen trays, each with a sealed door in the front. On each side of the trays, toweling shall be suspended vertically with the lower ends in a water pan acting as wicking in order to provide maximum wet surface area. These pans shall rest on the floor of the mold cabinet under each compartment. The water level in these pans shall be kept 65 mm to 75 mm (2-1/2 in to 3 in) in depth.

To maintain a uniform temperature within the mold cabinets, a walk-in housing or room shall surround the cabinets. A uniform temperature within this housing or room shall be maintained at 27 ± 3 °C (80 ± 6 °F). Fan-forced air circulation sufficient to avoid stratification shall be used to ensure even temperature in all areas of the housing. No air circulation shall occur within the mold cabinets, since mold growth is dependent upon still air.

7.14.3 Specimen preparation

Samples shall be selected that are representative of minimum intended performance based on manufacturing specifications (see Section 6.2.1). The required number of test specimens shall be as specified in Section 6.2.5.1.

The test specimens used for determination of mold resistance depend on panel construction:

- Plywood shall be tested using plywood shear specimens prepared as specified in PS 1 Section 6.1. Specimens shall be kerfed to pull lathe checks closed for maximum breaking load.
- Composite panels and mat-formed panels shall be tested using test specimens measuring 25 mm x 125 mm (1 in x 5 in). Composite panel specimens shall be cut with the wood grain of the outer veneers oriented parallel to the 125 mm (5 in) dimension. The veneer shall be completely free of knots, knotholes, and other voids permitted in the grade. Mat-formed panels shall be cut with the 125 mm (5 in) dimension oriented parallel to the panel strength axis, except in the case of panels containing oriented furnish, in which case two complete sets of specimens shall be prepared, one set oriented parallel and one set oriented perpendicular to the panel strength axis.

The panels selected for mold resistance testing shall be cut into one set of 100 pairs of specimens except for panels made with oriented furnish in which case two sets of 100 pairs of specimens shall be prepared; one set shall be oriented parallel and one set oriented perpendicular to the

panel strength axis. These paired specimens (mold test specimen and adjacent control specimen) shall be completely randomized and assembled into 10 groups of 20 specimens each (10 test specimens and 10 controls) for each panel direction tested. The controls and test specimens for each group shall then be separated and labeled.

7.14.4 Test procedure

(a) Plywood

Prior to placing plywood specimens in the mold cabinet, both the control and test specimens shall be stickered, given a five-second dip in room temperature tap water and then conditioned for one week (seven calendar days) in a separate conditioning chamber maintained at 27 ± 3 °C (80 ± 6 °F) and 95% (± 3%) relative humidity. After one week, both the control and test specimens shall be removed. The mold test specimens shall be dusted with soybean flour and placed flat on green pine sapwood veneer strips that have been stored in the mold cabinet. A stack of these veneer strips and test specimens shall then be placed in the mold cabinet. The control specimens shall be allowed to dry at ambient room conditions outside of the mold cabinet, but within the walk-in housing or room.

At two-week intervals, the designated groups of mold test specimens shall be removed from the mold cabinet and allowed to dry at ambient room conditions for one week (seven calendar days). Test specimens and corresponding control specimens shall then be tested as required.

Test results shall be compared to the acceptance criteria specified in Section 6.2.5.1(a).

(b) Composite Panels and Mat-Formed Panels

Prior to placing specimens in the mold cabinet, both the control and test specimens shall be stickered, given a five-second dip in room temperature tap water, and then conditioned for one week (seven calendar days) in a separate conditioning chamber maintained at 27 ± 3 °C (80 ± 6 °F) and 95% (± 3%) relative humidity

After one week, both the control and test specimens shall be removed. The mold test specimens shall be dusted with soybean flour and placed flat on green pine sapwood veneer strips that have been stored in the mold cabinet. A stack of these veneer strips and test specimens shall then be placed in the mold cabinet. Control specimens shall be subjected to moisture cycling according to Section 7.16 and allowed to dry at ambient room conditions outside of the mold cabinet, but within the walk-in housing or room.

At two-week intervals, the designated groups of mold test specimens shall be removed from the mold cabinet and allowed to dry at ambient room conditions for one week. The mold test specimens and corresponding moisture cycled and dried control specimens shall then be tested according to Section 7.7.

Test results shall be compared to the acceptance criteria specified in Section 6.2.5.1(b).

7.15 Adhesive bacteria test

7.15.1 General

This method determines if an adhesive system possesses sufficient resistance to bacterial attack to retain bond integrity under conditions that promote bacterial growth.

7.15.2 Specimen preparation

Samples shall be selected that are representative of minimum intended performance based on manufacturing specifications (see Section 6.2.1). The required number of test specimens shall be as specified in Section 6.2.5.3.

The test specimens used for determination of mold resistance depend on panel construction:

- Plywood shall be tested using plywood shear specimens prepared as specified as described in PS 1 Section 6.1. Specimens shall be kerfed to pull lathe checks closed for maximum breaking load.

- Composite panels and mat-formed panels shall be tested using test specimens measuring 25 mm x 125 mm (1 in x 5 in). Composite panel specimens shall be cut with the wood grain of the outer veneers oriented parallel to the 125 mm (5 in) dimension. The veneer shall be completely free of knots, knotholes, and other voids permitted in the grade. Mat-formed panels shall be cut with the 125 mm (5 in) dimension oriented parallel to the panel strength axis, except in the case of panels containing oriented furnish, in which case two complete sets of specimens shall be prepared, one set oriented parallel and one set oriented perpendicular to the panel strength axis.

From the panels selected for bacteria testing, sufficient material must be cut to yield 80 specimens for each panel direction to be tested. Specimens within each set shall be numbered consecutively 1 through 80 as cut, with odd-numbered specimens destined for bacteria exposure and the adjacent even-numbered specimens designated as control specimens. 10 odd-numbered bacteria test specimens and their matching 10 even-numbered control specimens shall then comprise a test group. Four such groups consisting of 20 specimens each (10 test and 10 control) shall be made up from the 80 specimens for each panel direction tested.

7.15.3 Test procedure

(a) Plywood

For plywood, the matched control and test specimens shall be subjected to the vacuum-pressure pre-treatment specified in PS 1 Section 6.1.3.2. Control specimens shall then be tested wet by tension loading to failure in a shear test machine operated at 762 mm (30 in) per minute. The jaws of the machine shall securely grip the specimens so there is no slippage. The breaking load shall be recorded to the nearest 4.448 N (1lbf), and control averages shall be calculated for each of the exposure groups.

Plywood test specimens shall be tested wet in the same manner as the control specimens described above. The breaking load shall be recorded to the nearest 4.448 N (1lbf) for each test specimen, and the average breaking load shall be calculated for each exposure group. Test results shall be compared to the acceptance criteria specified in Section 6.2.5.3(a).

(b) Composite panels and mat-formed panels

For composite and mat-formed panels, all specimens shall be subjected to the vacuum-soak portion of the moisture cycle test of Section 7.16. Control specimens shall be dried according to the procedures specified in Section 7.16 and broken dry according to the procedures specified in Section 7.7. The breaking load shall be recorded to the nearest 4.448 N (1lbf) and control averages calculated for each of the exposure groups.

All bacteria test specimens shall be floated flat in a slurry of soybean flour, water and alder sawdust consisting of 7% soybean flour, 83% water and 10% alder sawdust (sawdust conditioned to 18% moisture content). To this slurry shall be added 0.3% by weight of a 50% solution of sodium hydroxide. The slurry shall be poured into trays, filling them to a depth of 25 mm (1 in). These trays containing slurry and bacteria test specimens shall then be placed into a cabinet that is described and maintained according to Section 7.14.2.

ADVISORY NOTE: Do not use copper trays

One exposure group shall be removed from the cabinet every three weeks (21 calendar days) over the 12-week bacteria exposure period.

For composite and mat-formed panels, test specimens shall be dried according to the procedures specified in Section 7.16 and broken according to the procedures specified in Section 7.7. The breaking load shall be recorded to the nearest 4.448 N (1lbf) for each test specimen, and the average breaking load shall be calculated for each exposure group. Test results shall be compared to the acceptance criteria specified in Section 6.2.5.3 (b).

7.16 Moisture cycle test for bond performance (single cycle test)

7.16.1 General

This moisture cycle test is a quality control method to accelerate bond degradation. After moisture cycling, a mechanical test is generally performed.

7.16.2 Specimen preparation

Specimen size and configuration shall depend upon the test to be conducted after moisture cycling.

7.16.3 Specimen conditioning procedure

Specimens shall be placed in racks to ensure free movement of water and air around each test piece. The test specimens shall then be placed in a vacuum-pressure vessel, which is then filled with 66 ± 6 °C (150 ± 10 °F) water. A vacuum of 50.6 ± 7 kPa (15 ± 2 inches of mercury) shall be drawn on the vessel for 30 minutes. The vacuum shall then be released, and the specimens shall be allowed to soak in the water at atmospheric pressure for 30 minutes. The vessel shall then be drained and the specimens dried at 82 ± 6 °C (180 ± 10 °F) in an oven with fan-forced air circulation of 45 to 50 air changes per hour until the dry test condition (see Section 2.25) is achieved. The specimens shall then be tested dry according to the appropriate test method.

7.16.4 Test procedure

Specimens shall then be tested as specified in Section 7.6

7.17 Moisture cycle test for delamination and strength retention (six-cycle test)

7.17.1 General

This moisture cycle test is used in evaluation of delamination and strength retention of products rated as Exposure 1.

7.17.2 Specimen preparation

Specimen size and configuration shall depend upon the test to be conducted after moisture cycling.

7.17.3 Test procedure

Specimens shall be placed in racks to ensure free movement of water and air around each test piece. The specimens shall then be placed in a vacuum-pressure vessel, which is then filled with 66 ± 6 °C (150 ± 10 °F) water. A vacuum of 50.6 ± 7 kPa (15 ± 2 in) of mercury shall be drawn on the vessel for 30 minutes. The vacuum shall then be released, and the specimens shall be allowed to soak in the water at atmospheric pressure for 30 minutes. They shall afterwards be removed and dried for six hours at 82 ± 6 °C (180 ± 10 °F) in an oven with fan-forced air circulation of 45 to 50 air changes per hour. Specimens shall then be returned to the pressure vessel and the vacuum-soak cycle repeated. Following the second vacuum-soak cycle, specimens shall again be placed in the oven and dried for 15 hours. This shall complete two cycles. Testing shall be continued for two additional days until six cycles have been completed with the final step of redrying to achieve the dry test condition (see Section 2.25). The specimens are then tested according to the appropriate test method.

7.18 Bond performance test for plywood with knots and knotholes

7.18.1 General

This is a moisture cycle and loading procedure used to verify the resistance to deflection and damage under concentrated static and impact loads applied at the location of the maximum sized knot or knothole. The method is used to evaluate knots and knotholes greater than 51 mm (2 in) but not exceeding 76 mm (3 in) in width measured across the grain of Exposure 1 plywood panels.

7.18.2 Specimen preparation

From 10 panels measuring 1,220 mm x 2,440 mm (48 in x 96 in), one test specimen measuring at least 595 mm (23.5 in) wide by twice the span in length shall be cut. The test specimen shall be configured such that the knot or knothole to be evaluated is positioned mid-span and at least 295 mm (11-5/8 in) from either edge. The knot or knothole to be evaluated shall be the maximum size (+0, –13 mm [+0, –1/2 in]) permitted within the grade.

Each specimen shall be placed vertically in a tank and continuously sprayed with water on both the panel face and back for 72 hours. As an alternative to spraying, soaking panels continuously for 72 hours shall be permitted provided the height of the water level above the panels does not exceed 600 mm (24 in). Panels shall then be redried in an environment maintained at 20 ± 3 °C (68 ± 6 °F) and 65 ± 3% relative humidity until constant weight (weight change ≤ 0.2% within two hours) is achieved.

7.18.3 Test procedure

Concentrated static load – Procedures specified in ASTM E661 and Section 7.1 of PS 2 shall be followed except that:

1. The specimen shall be placed in the test frame with the subject knot or knothole in the tension zone when a compression load is applied.
2. The load shall be applied over the subject knot or knothole on the panel surface that is opposite the knot or knothole.

Concentrated impact load – Procedures specified in ASTM E661 and Section 7.1 of PS 2 shall be followed, except that:

1. The specimen shall be placed in the test frame with the subject knot or knothole in tension.
2. The impact shot bag shall be dropped once from a height of 760 mm (30 in).
3. The shot bag shall be dropped over the subject knot or knothole on the panel surface that is opposite the knot or knothole.

7.19 Radial probe test

7.19.1 General

This method defines a procedure for determining delamination associated with knots and knotholes in plywood panels.

7.19.2 Equipment

The probe used shall measure 6.4 mm (1/4 in) wide at the tip by 0.3 mm (0.012 in) thick and shall increase in thickness to about 0.6 mm (0.025 in) at a position located 12 mm (1/2 in) from the tip. The 6.4 mm (1/4 in) width shall increase to a width of 16 mm (5/8 in) at a position located 25 mm (1 in) from the tip. The probe is to be of any convenient length. The tip of the probe shall be squared off and not sharp so that when probing delaminated areas, wood fibers across the delaminated area will not be cut. In addition, the probe shall be fitted with a mechanism that is capable of limiting the force to the maximum level specified.

7.19.3 Specimen preparation

One knot or knothole per sample panel shall be selected. The knot or knothole selected shall be the maximum size (+0, –13 mm [+0, –1/2 in]) permitted within the grade. Each specimen shall measure 300 mm x 300 mm (12 in x 12 in) with the knot or knothole located approximately at the center.

Specimens shall be moisture cycled and redried according to one of the following three cycles:

1. The 72-hour water spray cycle specified in Section 7.18. After exposure, specimens shall be redried in an environment maintained at 20 ± 3 °C (68 ± 6 °F) and 65 ± 3% relative humidity until constant weight (weight change ≤ 0.2% within two hours) is achieved.

2. The 72-hour water soak cycle specified in Section 7.18 (as an alternative to the 72-hour water spray cycle). After exposure, specimens shall be redried in an environment maintained at 20 ± 3 °C (68 ± 6 °F) and 65 ± 3% relative humidity until constant weight (weight change ≤ 0.2% within two hours) is achieved.

3. Specimens shall be placed in a vacuum-pressure vessel and flooded with water at 49 ± 6 °C (120 ± 10 °F). Specimens shall then be subjected to a vacuum of 91 ± 7 kPa (27 ± 2 inches of mercury) for three hours. The vacuum shall be released, and the specimens shall then be immediately subjected to pressure of 379 ± 34 kPa (55 psi ± 5 psi) for three hours. This shall be followed by a second vacuum exposure of 91 ± 7 kPa (27 ± 2 inches of mercury) for two hours. In all cases, the exposure time shall be counted upon achieving the required vacuum or pressure. After exposure, specimens shall be redried in an environment maintained at 20 ± 3 °C (68 ± 6 °F) and 65 ± 3% relative humidity until constant weight (weight change ≤ 0.2% within two hours) is achieved.

7.19.4 Test procedure

Each specimen shall be cut into eight sectors with radii intersecting at the center of knot or knothole. The area surrounding the knot or knothole shall be visually inspected for delamination. Where separations are visible, the probe shall be inserted with a force of 35.5 ± 4.5 N (8 ± 1 lbf). No prying action or lateral movement shall be applied.

For each sector, the radial distance from the tip of the sector to the boundary of separation beyond the knot or knothole shall be measured along both edges of the sector and recorded. Where a separation is not found, the distance from the tip of the sector to the boundary of the knot or knothole shall be measured and recorded.

The total area of separation for each specimen shall be calculated as:

$$A = \pi R^2$$

where: A = total area of separation (mm^2 or in^2)

R = average radius of separation, calculated as the average of 16 distances (measured at edges of sectors) from the tips of the sectors to either the boundary of separation or the boundary of the knot or knothole (mm or in).

7.20 Static bending stiffness capacity (EI) test (non-mandatory)

7.20.1 General

This procedure provides an estimate of panel bending stiffness capacity. Static bending stiffness is not a requirement, but it can provide a useful method for manufacturer quality control or for other uses where precision is less critical.

7.20.2 Equipment

Sawhorses may be used for support, but the metal frame shown in Figure 6 is recommended. The supports shall be at least 1,220 mm (48 in) wide, fixed to the floor or weighted, level and parallel to each other. The deflection gage shall have a measuring range of 0 to 50 mm (0 to 2 in) and be capable of accurately measuring deflection to the nearest 0.025 mm (0.001 in).

Loading bars shall measure 1,220 mm (48 in) long and between 25 mm to 38 mm (1 in to 1.5 inches) wide. The thickness of the bars will vary as needed to achieve the desired nominal mass. The nominal mass of the load bars are typically in the range of 44.5, 89.0, and 178.0 N (10, 20 and 40 lb). The mass of the bars shall be determined to the nearest 0.5 N (0.1 lb).

Figure 6. Steel Test Frame for Static Bending Stiffness Test

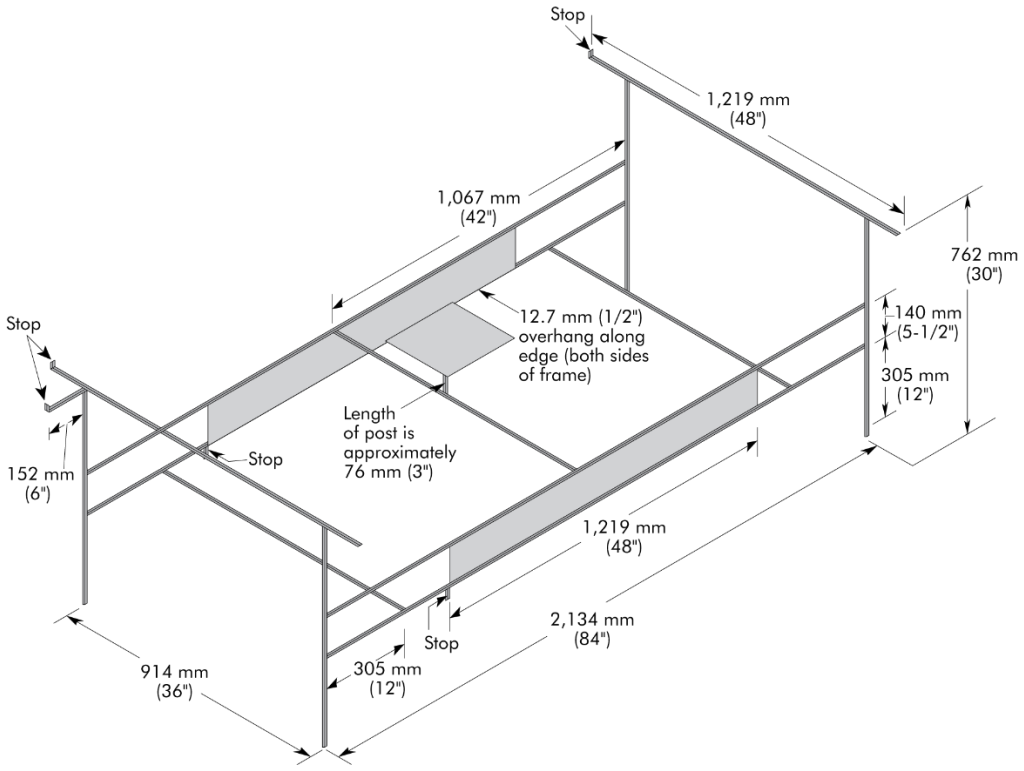

7.20.3 Specimen preparation

When this method is used for manufacturer quality control, the number of samples will be prescribed by the Accredited Certification Agency. When measuring stiffness parallel to the panel strength axis, panels measuring 1,220 mm x 2,440 mm (48 in x 96 in) shall be tested. Other lengths are allowed when measuring stiffness perpendicular to the panel strength axis.

It may be useful to mark lines across the width of the panel back side (1,220 mm (48 in) dimension) at position located 150 mm (6 in) from each end of the panel to assist with squarely positioning the panel on the supports. A third line is suggested across the panel top at mid-length (Figure 7) to assist with squarely positioning the loading bars during test. On the bottom side, also mark an "X" at the panel's center to assist with positioning the deflection gage to assist with squarely positioning the loading bars during test.

Figure 7. Panel Alignment Marks

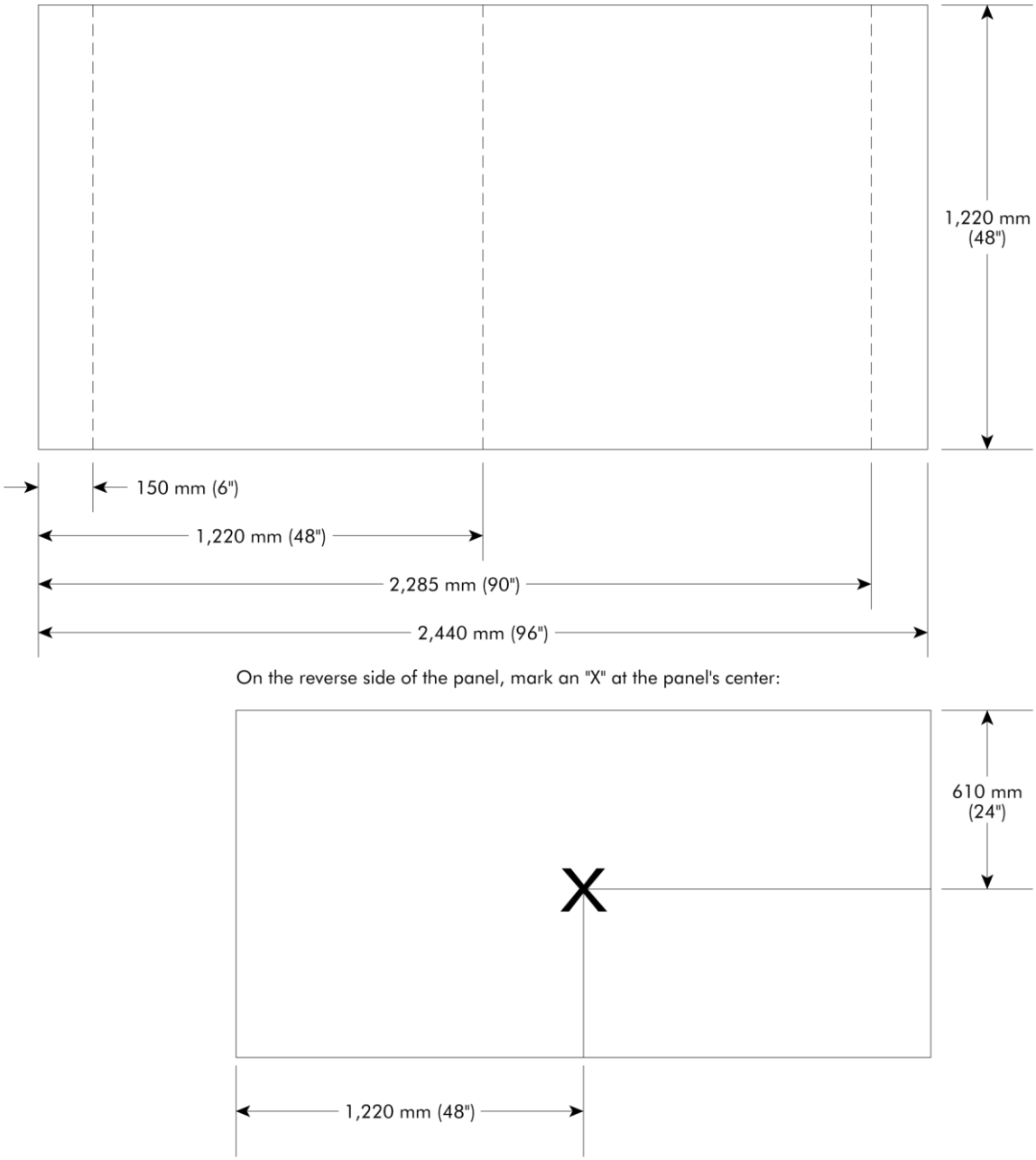

7.20.4 Test procedure

a) The span when testing panels in the direction **PARALLEL** to the strength axis (the 2,440 mm /96 in panel dimension) shall be 2,135 mm (84 in). The span when testing panels in the direction **PERPENDICULAR** to the strength axis (the 1,220 mm /48 in panel dimension) shall be 915 mm (36 in).

b) Place a panel on the supports in the face up position according to the manufacturer's intended use recommendations. Align the panel so the edges are parallel to the supports. There should be an equal length of panel overhanging the supports on each end of the test frame. The lines drawn on the bottom of the panel should be used to assist with ensuring proper panel alignment on the support frame.

c) Position the deflection gage underneath the panel on an adjustable stand, perpendicular to the panel surface so that the tip of the gage is placed directly on the “X” marking the center of the panel. "Zero" the deflection gage. Using the appropriate load bar, apply a pre-load weight (P_1) across the width of the panel at a position that is located mid-length of the test span. The line drawn on the top of the panel can be used to assist with determining the location of the mid-length (mid-span) position. This pre-load weight is applied to settle the panel, eliminating the possible effects of minor panel warping, and should result in complete contact of the panel along the length of each support. Discard excessively warped panels.

d) The following pre-load weight should be used (see also Table 9 below):

1. **3/8 to 7/16 PERF CAT:** Use 44.5 N (10 lbs) pre-load (P_1)

2. **15/32 PERF CAT or Greater**: Use a pre-load load of 89.0 N (20 lbs.) (P_1)

e) Immediately after applying the pre-load weight, measure and record the pre-load deflection (D_1) to the nearest 0.025 mm (0.001 in). Two people should be involved in the test due to the need for deflection readings to be made immediately after application of the initial and final test loads.

f) **For panels LESS THAN OR EQUAL TO 3/4 PERF CAT:**

1. Place an additional test load (see Table 9) across the width of the panel at a position that is located mid-length of the test span, parallel to the supports, to achieve the suggested total load (P_2). Record the final deflection reading (D_2) immediately after applying the final test load.

2. Calculate the net deflection (D_2 - D_1). This value should be in the range of **6.4 mm to 8.9 mm (0.25 in to 0.35 in)**. If the net deflection is not within the specified range, then adjust (increase or decrease) the test load as needed to achieve net panel deflection in the specified range and repeat the test. Record the actual total load (P_2) and final deflection (D_2) used.

g) **For panels GREATER THAN 3/4 PERF CAT:**

1. Place an additional test load (see Table 9) across the width of the panel at a position that is located mid-length of the test span, parallel to the supports, to achieve the suggested total load (P_2). Record the final deflection reading (D_2) immediately after applying the final test load.

2. Calculate the net deflection (D_2 - D_1). This value should be **at least 5 mm (0.2 in)**. If the net deflection does not meet or exceed the minimum deflection requirement, then adjust (increase or decrease) the test load as needed to achieve the minimum net panel deflection and repeat the test. If necessary, cut panels to a width of 610 mm (24 in) to achieve deflection requirements. Record the actual panel width, total load (P_2) and final deflection (D_2) used.

Table 9

SUGGESTED STATIC BENDING WEIGHT BY PANEL PERFORMANCE CATEGORY												
	Pre-Load (P_1)		Test Load		Total Load (P_2)		Required Deflection ($D_2 - D_1$)		Test Span (Parallel)		Test Span (Perpendicular)	
PERF CAT	N	Lbs	N	Lbs	N	Lbs	Minimum	Maximum	mm	inch	mm	inch
3/8, 7/16	44.5	10	44.5	10	89.0	20	6.4mm (0.25")	8.9mm (0.35")	2,135	84	915	36
15/32 – 5/8	89.0	20	89.0	20	178.0	40	6.4mm (0.25")	8.9mm (0.35")	2,135	84	915	36
23/32 – 3/4	89.0	20	178.0	40	267.0	60	6.4mm (0.25")	8.9mm (0.35")	2,135	84	915	36
3/4 - 7/8	89.0	20	178.0	40	267.0	60	5mm (0.2")	N/A	2,135	84	915	36
Greater than 7/8	89.0	20	**	**	**	**	5mm (0.2")	N/A	2,135	84	915	36
**If larger weights are not available to achieve total deflection >5mm, panels can be cut to 610mm (24 inch) to achieve deflection requirements.												

h) Calculate the bending stiffness for each panel according to the following formula:

$$EI = \frac{(P_2 - P_1)\text{x}\,\lambda^3}{K\ \text{x}\ b\ \text{x}\ (D_2 - D_1)}$$

Where:

EI: Static load bending stiffness, N-mm^2 / mm (lbf-in^2/ft)

P_1: Pre-Load, N (lbf)

P_2: Total Load, N (lbf)

ƛ: Test span, mm (in)

b: Width of the test panel, mm (in) See Note below

D_1: Measured deflection – Pre-Load, mm (in)

D_2: Measured deflection - Total Load, mm (in)

K: Constant (use 48 if b is measured in mm, use 4 if b is measured in inches.)

NOTE: If testing panels with a tongue and groove profile on the panel edges, the net width of the panel face, excluding the tongue, should be used in the bending stiffness calculation.

8 MARKING AND CERTIFICATION

8.1 Certification

Panels represented as being in conformance with this Standard shall bear the mark of an Accredited Certification Agency (see Section 8.2).

Panels that bear the mark of an Accredited Certification Agency require an initial and ongoing periodic inspection of the manufacturing and quality processes used to produce the product by an Accredited Inspection Agency and periodic testing by an Accredited Testing Laboratory using specific methods and performance criteria to verify initial and ongoing product conformity to this Standard.

The Accredited Inspection Agency and Accredited Testing Laboratory shall be approved by the Accredited Certification Agency.

Testing by a manufacturer's testing laboratory shall be permitted if approved by the Accredited Certification Agency.

8.1.1 Marks indicating conformance with this Standard shall be applied to wood structural panels when certified by the Accredited Certification Agency based on 8.1.1.1.

8.1.1.1 Panels shall conform to the performance requirements specified in Section 5 of this Standard.

8.2 Accredited Certification Agency

8.2.1 To qualify as an Accredited Certification Agency in accordance with this Standard, a Certification Agency shall be based in the U.S. or Canada and be accredited in accordance with ISO/IEC 17065, *Conformity assessment – Requirements for bodies certifying products, processes and services* by an accreditation body that is a signatory to the Global ACI Multilateral Recognition Arrangement (MRA). The Certification Agency's scope of accreditation or the corresponding list of standards provided to the Accreditation Body shall include a reference to this PS 2 Standard.

8.2.2 Outsourcing (subcontracting)

8.2.2.1 If an Accredited Certification Agency subcontracts any part of the evaluation, to include inspection or testing, it shall comply with the requirements of ISO/IEC 17065 Section 6.2.2.

NOTE: Consistent with ISO/IEC 17065, use of external personnel under contract is not considered outsourcing provided such persons are formally contracted to operate under the Certification Agency's accredited management system. In doing so, the Certification Agency shall take responsibility for the competence, awareness, and training for such individuals as specified in ISO/IEC 17065 and, for the purposes of persons contracted to perform inspections, the requirements specified in ISO/IEC 17020 as required by ISO/IEC 17065 Section 6.2.1.

8.2.2.2 Whenever subcontractors carry out work that forms part of an inspection or test, the responsibility for any determination of conformity of the inspected or tested item to the requirements defined or referenced in this Standard shall remain with the Accredited Certification Agency.

8.2.2.3 The Accredited Certification Agency shall record the details of its investigation of the competence of its subcontractors and of their conformance to the requirements specified or referenced in ISO/IEC 17065 and the requirements specified in this Standard. The Accredited Certification Agency shall maintain a register of approved subcontractors.

8.3 Accredited Inspection Agency

8.3.1 To qualify as an Accredited Inspection Agency in accordance with this Standard, an Inspection Agency shall be based in the U.S. or Canada and be accredited in accordance with ISO/IEC 17020, *Conformity assessment – Requirements for the operations of various types of bodies performing inspection* by an accreditation body that is a signatory to the Global ACI Multilateral Recognition Arrangement (MRA) and shall:

8.3.1.1 Have trained personnel capable of conducting inspections of wood structural panel products and the manufacturing and quality processes used to produce such products according to the requirements of ISO/IEC 17020 and this Standard.

8.3.1.2 Have trained personnel able to conduct or oversee sampling for testing as specified in this Standard.

8.4 Accredited Testing Laboratory

8.4.1 To qualify as an Accredited Testing Laboratory in accordance with this Standard, a Testing Laboratory shall be accredited in accordance with ISO/IEC 17025 *General requirements for the competence of testing and calibration laboratories*; by an accreditation body who is a signatory to the Global ACI Multilateral Recognition Arrangement (MRA). An Accredited Testing Laboratory that conducts testing to conform to the requirements of this Standard must have those tests under their scope of accreditation and shall:

8.4.1.1 Have access to the facilities, equipment, and competent technical personnel to test structural panel products according to the requirements and test methods specified in this Standard.

8.4.1.2 Have procedures to be followed by its personnel in the performance of the testing.

8.5 Panel marking

All Sheathing, Structural I Sheathing, Single Floor and Structural I Single Floor panels represented as conforming to this Standard shall be identified with a mark bearing the grade name appropriate under these specifications, and a mark of an Accredited Certification Agency. If identified by such a mark, the product specification shall be available from the Accredited Certification Agency whose mark appears on the panel. The panel grade, span rating, bond classification and the symbol PS 2-25 signifying conformance to this Standard shall be included in the mark. Any supplemental application specifications of the manufacturer shall be clearly marked on each panel. The mark shall maintain legibility after weather exposure during construction. Mat-formed panels with oriented furnish shall be marked to show the direction of the strength axis. The optional notation “Sized for Spacing” (see Section 2.21) is permitted.

ADVISORY NOTE: The following abbreviations in the panel mark are permitted:

- Sheathing – SHTG
- Structural I – STRUC I
- Exposure 1 – EXP 1
- Exterior – EXT

The panel fractional Performance Category (see Section 5.2.1.2) and term “Performance Category” or abbreviation (i.e., PERF CAT, CAT or Category) shall be labeled on the panel. In addition, the thickness in 1,000ths of an inch within the permitted tolerance (see Section 5.2.1.2) for the Performance Category shall be labeled on the panel.

ADVISORY NOTE: See Appendix D for a table of recommended thickness labels.

8.6 Voiding marks

Panels originally marked as conforming to this Standard but subsequently rejected as not conforming thereto shall have any reference to the standard obliterated or voided by the manufacturer as follows:

- Shop panels shall be plainly identified by means of a 100 x 125 mm (4 x 5 in) minimum size mark carrying the legend, “Shop-cutting panel – all other [agency] marks void” (See Section 2.20), or
- Other panels rejected as not conforming shall be plainly identified by a mark placed next to, and be no less prominent than the original mark, carrying the legend, “REJECT – All other agency marks void.”

No reference shall be made to this Standard in the certification or marking of panels not conforming to all of the applicable provisions of this Standard.

9 QUALITY ASSURANCE REQUIREMENTS

The Accredited Certification Agency shall implement an inspection and test program as specified in Section 9.2.

The production process and quality system of each facility producing panels in accordance with this Standard shall be subject to on-site audits by the Accredited Inspection Agency at a minimum frequency (approximately quarterly) of four times per year when certified panels are manufactured. In the event that a manufacturer goes more than three months without producing certified panels, once production restarts an audit shall be conducted in accordance with the Accredited Certification Agency’s program.

NOTE: In situations where travel is unsafe due to pandemic, social unrest, etc. virtual audits can be used in place of on-site audits.

9.1 Manufacturing Quality Program

To consistently conform to the requirements of this Standard, manufacturers shall implement a manufacturing quality program. The extent of this program is determined by the manufacturer but shall include at a minimum, but not be limited to, the following:

- Roles and Responsibilities for Quality Personnel
- Document and Data Control
- Procurement
- Production
- Specifications
- Inspection and Product Testing
- Control of Measuring Equipment
- Control of Nonconforming Materials
- Product Marking
- Internal Audits
- Product Performance Feedback
- Records Retention
- Product Identification and Traceability

The manufacturer's quality program shall be documented in a Quality Manual that is reviewed and approved by the Accredited Certification Agency. The Quality Manual is evaluated as part of the Accredited Inspection Agency's periodic audits and the results of that evaluation are reported to the Accredited Certification Agency.

9.2 Inspection and Test Program

The Accredited Certification Agency shall establish and implement an Inspection and Test Program to verify ongoing manufacturer and product conformity to the mill specification and the requirements of this Standard. At a minimum, the Inspection and Test Program shall include the following:

9.2.1 At least annually (approximately every 12 calendar months):

9.2.1.1 Assessment that the mill specifications for each mill are appropriate for the product being certified.

9.2.1.2 A review of manufacturer's Quality Manual. Updates to the Quality Manual shall be prepared by the manufacturer and submitted to the Accredited Certification Agency for review and approval. If the manufacturer made no updates to the Quality Manual in that year the manufacturer needs to notify the Accredited Certification Agency that no updates were done.

9.2.2 At least semiannually (approximately every 6 calendar months):

9.2.2.1 Inspection of species, panel grade, thickness and, if applicable, construction conform with this Standard.

9.2.3 At least quarterly (approximately every 3 calendar months):

9.2.3.1 The production and quality system of each production facility producing panels in accordance with this Standard shall undergo on-site audits by the Accredited Inspection Agency at a minimum frequency of four times per year. Quarterly audits shall include, at a minimum:

9.2.3.1.1 Verification of the appropriate use and legibility of panel marks to include, if applicable, the appropriate use of panel voiding marks as specified in Section 8.6.

9.2.3.1.2 Review of the manufacturer's in-plant quality inspection and test data to verify on- going product conformity to the mill specification and the requirements of this Standard.

9.2.3.2 Verification sampling and inspection shall be conducted by the Accredited Inspection Agency at least (4) times per year, either in conjunction with or independent from the quarterly audits specified in Section 9.2.3.1. The requirements for verification sampling and inspection shall be

determined by the Accredited Certification Agency taking into considering factors such as the manufacturer's production and quality control capabilities, the results of previous inspections conducted on the manufacturer's certified products, product performance feedback including customer complaints, the knowledge base of the Accredited Certification Agency, and other factors, as applicable. The sampling requirements in Section 9.3 shall apply.

9.2.3.3 Verification testing shall be conducted by the Accredited Testing Laboratory at least (4) times per year in conjunction with the sampling and inspection specified in Section 9.2.3.2. The requirements for verification testing shall be determined by the Accredited Certification Agency taking into considering factors such as the manufacturer's quality control test capabilities, the results of previous quality control tests conducted by the manufacturer or verification tests conducted by the Accredited Testing Laboratory, product performance feedback including customer complaints, the knowledge base of the Accredited Certification Agency, and other factors, as applicable.

9.3 Sampling

9.3.1 Samples collected for verification inspection and/or testing as part of the Accredited Certification Agency's Inspection and Test program shall be randomly sampled and shall be representative of the population being inspected or tested. Samples shall not be selected from lots/batches produced specially for sampling and inspection/testing certified.

9.3.2 The sampling for the Inspection and Test program shall be performed by the Accredited Inspection Agency or the Accredited Inspection Agency shall witness the sampling being performed and ensure that the samples are properly identified and traceable back to witnessing documentation.

9.3.3 If the manufacturer does not produce a given product type within the scope of certification during the period between regularly scheduled sampling, the Accredited Certification Agency shall work with the manufacturer to ensure that sampling is conducted at the time of the next regular production for that product type.

9.4 Corrective Action

When the inspection and test program reveal noncompliance with the manufacturer's quality system, the mill specification, the Accredited Certification Agency's policies and procedures, and/or the requirements of this Standard, the Accredited Certification Agency shall notify the manufacturer of all nonconformities it identifies. The manufacturer is required to take corrective action according to the Accredited Certification Agency's program requirements. The manufacturer shall document the measures taken (or to be taken) to correct the identified nonconformities and to prevent them from recurring. The Accredited Certification Agency and/or Accredited Inspection Agency shall conduct appropriate follow-up to verify that the actions taken were effective in correcting the problem and preventing it from recurring.

10 EFFECTIVE DATE AND IDENTIFICATION

This Standard became effective on October 23, 2026. As of that date, reference to this Standard is permitted in contracts, codes, advertising, invoices, product labels, and the like; however, a product shall not be advertised nor represented in any manner that in any way might imply approval or endorsement of that product by the National Institute of Standards and Technology and/or the U.S. Department of Commerce.

The following suggested statements are permitted in representing products as conforming to the requirements of this Standard:

- "This [*e.g, panel, shipment]* conforms to all requirements established in Voluntary Product Standard PS 2-25, 'Performance Standard for Wood Structural Panels,' in accordance with the U.S. Department of Commerce Procedures for the Development of Voluntary Product Standards. Full responsibility for the conformance of this product to the standard is assumed by (name and address of manufacturer and/or distributor)."
- "Conforms to Voluntary Product Standard PS 2-25, (name and address of manufacturer and/or distributor)."

11 STANDARD REVIEW COMMITTEE

A Standard Review Committee has been established to assist in keeping this Standard current. Issues regarding interpretation or implementation of the standard and third-party quality assurance policies and procedures shall be considered by the Standard Review Committee as appointed by the Standing Committee. A request to consider such issues shall be made in writing to the Secretariat of the Standing Committee (NIST), who will bring it to the attention of the Standard Review Committee. Formal operating procedures developed for the Committee shall be subject to approval by NIST. Any recommended actions by the Committee that affect the PS 2 Standard will be reported to the Standing Committee for their consideration and action.

APPENDIX A. (Nonmandatory)

A1 SHIPMENT REINSPECTION PRACTICES

A1.1 General

This information is based on industry practice and is offered to wood structural panel purchasers.

A1.2 Request for reinspection

Any request by the buyer for the reinspection of any item or lot of panels certified as conforming to this Standard shall be directed to the seller. Lacking agreement of the buyer and seller as to the settlement of a complaint, the purchase, sale, or shipment of panels certified as conforming to this Standard shall be construed as involving agreement to submit such panels to reinspection by the Accredited Certification Agency whose mark was used.

A1.3 Responsibility of the buyer

A request to the seller for reinspection is permitted:

a. for panel grade – within 30 days[7] after arrival at the first point of receipt from the mill, if the grade of any item, as invoiced, is in doubt;

b. for glue bond quality of Exterior panels – when delamination is visibly evident;

c. for bond quality and bond performance associated with knots and knotholes of Exposure 1 panels – within six months after arrival at first point of receipt from the mill, if delamination is visibly evident;

d. for structural performance, such as resistance to concentrated loads on panels – within six months after arrival at first point of receipt from the mill;

e. for physical properties, such as linear expansion of panels – within six months after arrival at first point of receipt from the mill.

All panels of disputed grade shall be kept intact and properly protected from damage, deterioration, and from direct exposure to moisture that could interfere with a fair reinspection.

All panels of disputed quality shall be held for a period not to exceed 30 days after the date of request for reinspection. Use by the buyer of any or all of the disputed stock within the 30-day period shall constitute an acceptance of the used portion.

A1.4 Responsibility of the seller

A request for reinspection shall be promptly acknowledged by the seller following its receipt.

A1.5 Cost and assistance

The expense of reinspection shall be borne by the seller if the item, lot, or shipment in dispute fails to pass the reinspection as provided for in A1.6. If the panels pass the reinspection, said expenses shall be borne by the buyer. The buyer shall lend all reasonable assistance to facilitate the reinspection.

A1.6 Reinspection procedures and settlement

A1.6.1 Condition of panels

All panels designated as complying with this Standard shall be subject to reinspection in the as-manufactured condition only. This requirement does not apply to reinspections for bond quality.

---

[7] For unitized shipments, the 30-day limit shall be extended to include the period dating from receipt of shipment to breaking of the first bundle, but not exceeding six months, provided the requirement for keeping the disputed panels intact is observed and the panels in question are held for at least 30 days following the request for reinspection.

A1.6.2 Sampling for panel grade, size and thickness reinspections

At buyer's or seller's option, grade, size, and thickness reinspections may include all panels of an item whose conformance to this Standard is in dispute. However, buyer and seller may agree upon a reduced basis for sampling provided at least 20% or 300 panels, whichever is smaller and which represents only those items as invoiced that are in dispute, are reinspected for conformance. For reduced sampling, the quantity of panels selected from each disputed item shall be prorated according to the number of panels included in each item as invoiced. Panels found to be below grade or out of tolerance for size and thickness shall have improper trademarks obliterated and shall be re-marked with appropriate designation with a special inspection mark registered by the qualified agency conducting the reinspection and applied by that agency's authorized representative.

A1.6.3 Panel grade, size, and thickness reinspections

If reinspection establishes that a disputed item is more than 5% below grade or out of dimensional tolerance for the product description as invoiced, that item fails to pass the reinspection and the nonconforming panels need not be accepted. If reinspection establishes that a disputed item is 5% or less below grade or out of dimensional tolerance, it passes the reinspection and the disposition of the nonconforming panels shall be as agreed upon between the buyer and seller. In addition to the above 5% grade and dimensional tolerance, a 5% tolerance shall apply separately to the inner ply gap limitations, including the limitations applicable to plugged crossbands and jointed crossbands, as set forth in PS 1.

A1.6.4 Sampling for bond quality, bond performance associated with knots and knotholes, structural performance, or physical properties reinspections

For test purposes, 20 panels, or 5% of the panels, whichever is less, shall be selected at random from the item, lot, or shipment that is in dispute. The number of panels required shall be calculated by applying the "percent panels" to the lot size and converting part panels to whole panels by using a rounding procedure where 0.01 to 0.49 parts are considered to be the smaller whole number, while 0.50 to 0.99 parts are considered to be the larger whole number. These panels shall be selected from locations distributed as widely as practicable throughout the material being sampled. When an item, lot or shipment involves panels with different bond requirements, testing and evaluation shall apply separately to each category.

A1.6.5 Bond quality reinspections

Reinspection of the unused panels in the disputed item, lot, or shipment shall be carried out following the procedures set forth in Sections 7 and A1.6.4 above. If the reinspection tests establish that the glue bond quality does not conform to the requirements of Section 6.2.4 as applicable, the item, lot, or shipment fails to pass the reinspection and may be rejected by the buyer. If the glue bond quality requirements are met, the item, lot or shipment passes the reinspection, and the buyer shall accept the item, lot or shipment as invoiced, except that the buyer need not accept any delaminated Exterior panels.

A1.6.6 Reinspection for bond performance associated with knots and knotholes

Unless otherwise agreed upon between buyer and seller, reinspections for bond performance associated with knots and knotholes shall be limited to knots and knotholes greater than 50 mm (2 in) but not exceeding 76 mm (3 in) in width measured across the grain. Knots and knotholes within this range shall be reinspected according to Sections 7.18 and 7.19. If the panels were not exposed to weather prior to reinspection sampling, they shall be moisture conditioned according to the cycle specified in Sections 7.18 and 7.19 prior to reinspection.

If reinspection tests establish that the bond performance associated with knots and knotholes requirements are not met, the item, lot or shipment fails to pass the reinspection and may be rejected by the buyer. If the reinspection requirements are met, the item, lot or shipment passes the reinspection, and the disposition of the nonconforming panels shall be as agreed upon between the buyer and seller.

A1.6.7 Structural performance reinspections

Unless otherwise agreed upon between buyer and seller, structural performance reinspections are limited to concentrated loads (Section 5.3.1.1). If the buyer and seller agree to additional tests, a larger number of panels than those given in Section A1.6.4 may be needed. If the reinspection tests establish that the concentrated load requirements are not met, the item, lot, or shipment fails to pass the reinspection and may be rejected by the buyer. If the concentrated load requirements are met, the item, lot, or shipment passes the reinspection, and the disposition of the nonconforming panels shall be as agreed upon between the buyer and seller.

A1.6.8 Physical property reinspections

Unless otherwise agreed upon between buyer and seller, physical property reinspections shall be limited to linear expansion (Section 5.3.2.1). If the reinspection tests establish that the linear expansion requirements are not met, the item, lot, or shipment fails to pass the reinspection and may be rejected by the buyer. If the linear expansion requirements are met, the item, lot or shipment passes the reinspection, and the disposition of the nonconforming panels shall be as agreed upon between the buyer and seller.

Reinspection Flow Chart

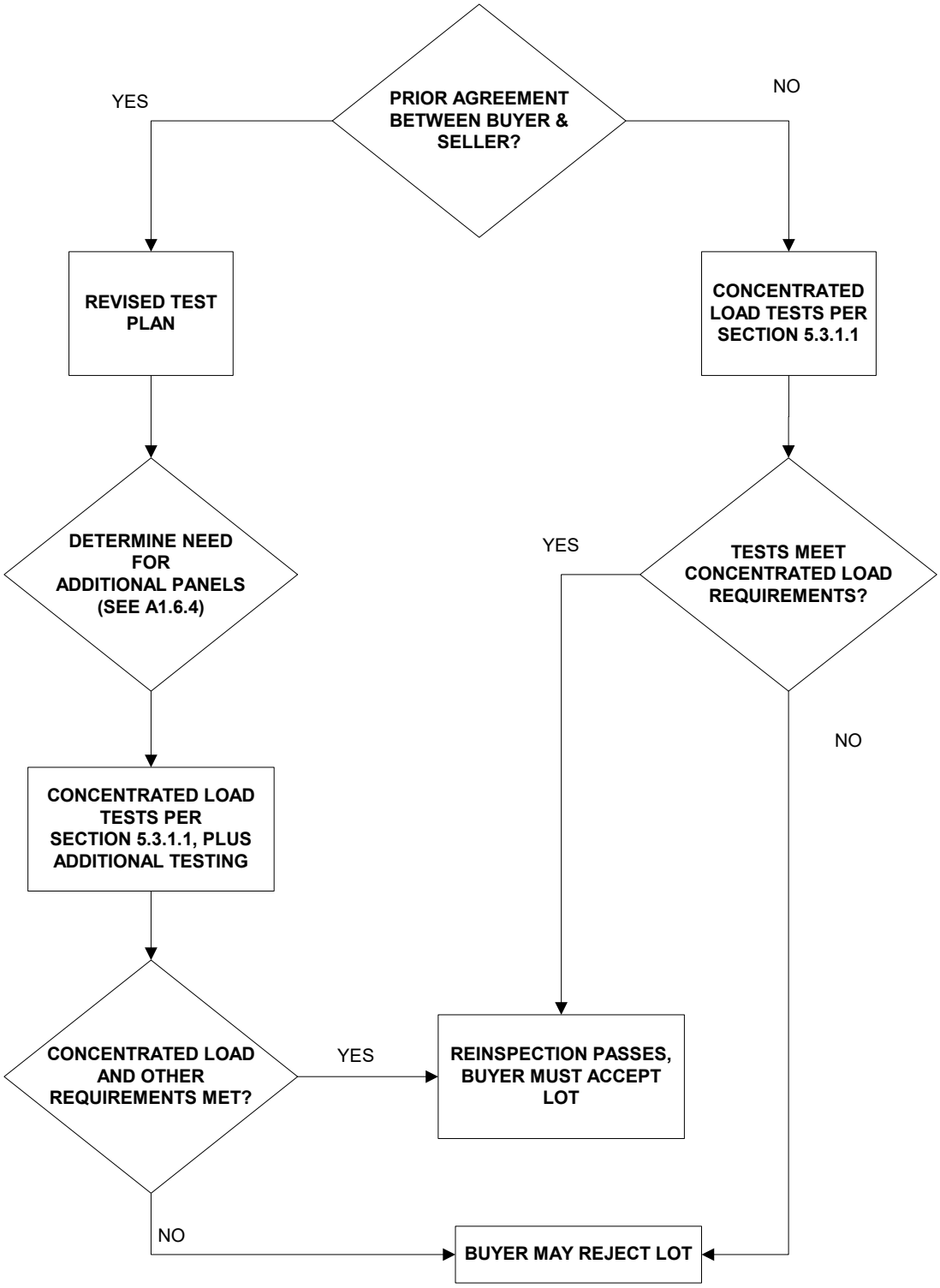

APPENDIX B. (Nonmandatory)

PS 2 Qualification Flow Chart

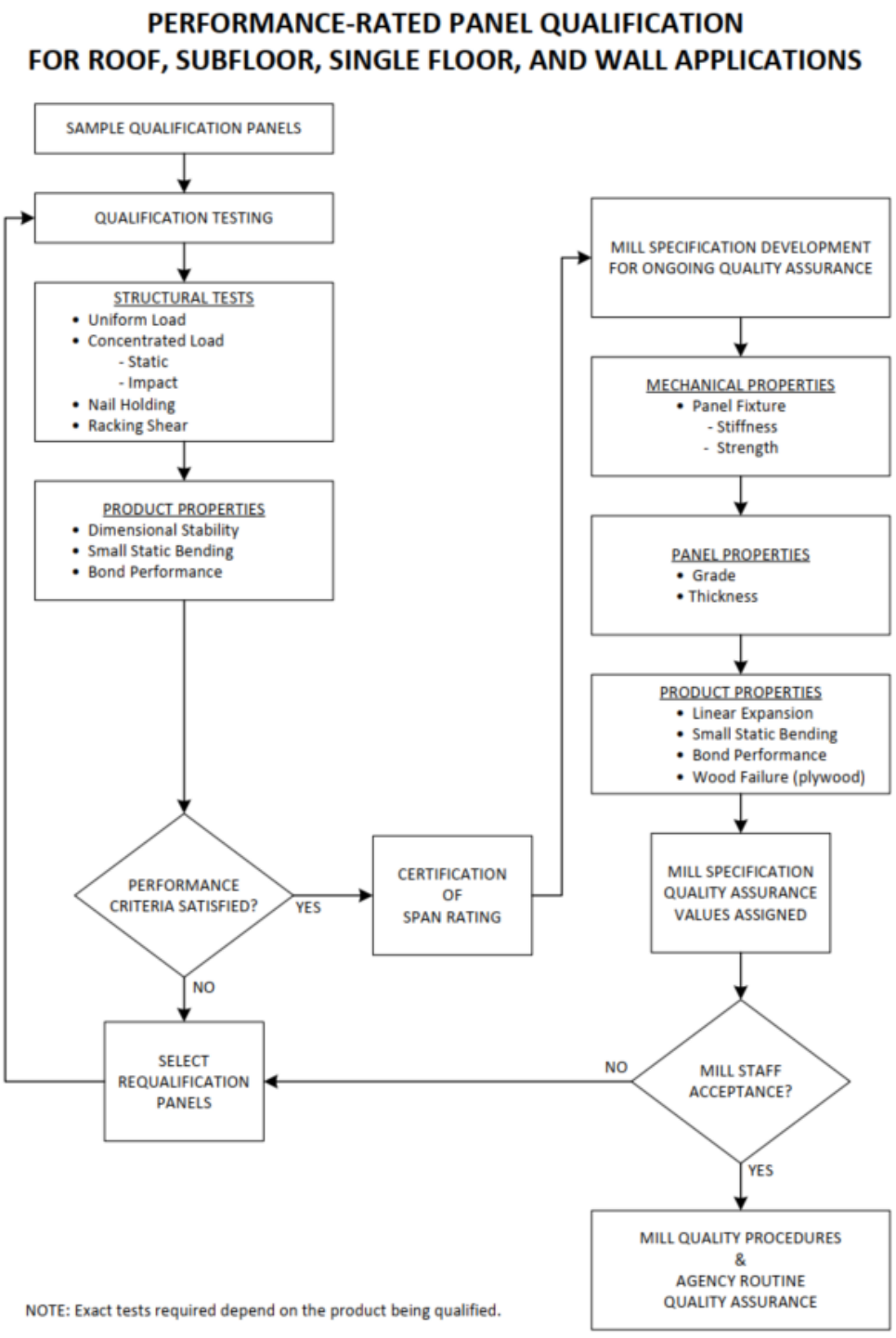

APPENDIX C. (Nonmandatory)

History of the Standard and Comments on the Current Edition

C1 History of PS 2

In September 1988, a special Bi-national Committee (BNC) was formed and charged with the task of fostering the mutual objective of the United States and Canada with respect to the development and implementation of harmonized standards with regard to performance requirements for plywood. This action was a consequence of the implementation of the Free Trade Agreement (FTA) of 1987. In accordance with the Agreement, U.S. tariffs on plywood and other structural panels could not be removed until the trade issues involving plywood standards were resolved. Of concern to the United States was the fact that certain grades of plywood permitted in PS 1 were not covered in Canadian plywood standards, and consequently not acceptable under Canadian building codes.

The BNC began its task by reviewing the existing industry standard *APA – The Engineered Wood Association* (APA), APA PRP-108, Performance Standards and Policies for Structural-Use Panels, and the Canadian Standards Association (CSA) standard CAN/CSA-O325, Construction Sheathing, to identify the technical differences and to consider the roles the standards might play in resolving the plywood trade issues. It concluded that the development of common criteria embodied in performance-based national standards offered means to resolve the trade issue.

Next, the BNC sponsored a joint U.S./Canadian study designed to produce additional comparative information on U.S. and Canadian plywood. Based on BNC's assessment of the technical differences in the APA and CSA standards and the data derived from the joint study, the BNC in November 1990 submitted new U.S. and Canadian draft standards, respectively, to the National Institute of Standards and Technology (NIST) in the United States and the CSA in Canada for processing as national consensus standards.

In March 1991, APA signed an agreement with NIST to support development of the proposed U.S. performance standard as a Voluntary Product Standard (VPS) under procedures of the U.S. Department of Commerce. In April 1991, NIST established a Standard Review Committee under the VPS Program to assume responsibility for development of the U.S. standard. On October 15, 1991, after two 30-day review periods and some editorial changes, the Committee recommended unanimously that the proposed standard be prepared for public review and acceptance as a Voluntary Product Standard.

In March 1992, the proposed VPS Standard was distributed to a list of manufacturers, distributors, consumers, and others who might have interest in the subject standard, and on April 8, 1992, NIST announced in the Federal Register the public circulation of the proposed standard and invited public comments. A 75-day comment period was allowed. Following public review of the Standard, which ended June 22, 1992, NIST determined that the responses indicated consensus among producers, distributors, and consumers in accordance with the published procedures. The Standard was originally approved for publication by NIST as Voluntary Product Standard PS 2-92, Performance Standard for Wood-Based Structural-Use Panels, on August 27, 1992.

The new U.S. Standard was not intended to replace existing standards such as Voluntary Product Standard PS 1-83, Construction and Industrial Plywood, but to serve as an alternative performance-based standard that would relate to a variety of forms of structural panels: plywood, oriented strand board, waferboard, structural particleboard, and composite panels.

C2 Edition PS 2-04

After considerable technical review, PS 2-04 was revised and accepted in December 2004. The PS 2-04 edition contained many revisions. The major technical revisions included the following.

C2.1 Revision to Exposure 1 bond performance methods

This edition of the Standard introduced a new method for determining Exposure 1 bond performance for mat-formed panels. As an alternate to using the 1 inch by 5 inch edgewise bending method, stiffness and strength criteria based on larger flatwise bending specimens were introduced.

C2.2 Linear expansion method

Revisions to the linear expansion method were made based on a need to reflect industry performance and serviceability requirements. Industry samples were benchmarked for linear expansion, and a suitable cycle and criteria were evaluated. The criterion was established at an average level, which is common for serviceability applications. The cycle was based on equilibrium at 50% relative humidity, which is viewed to be more representative of installed conditions than the oven-dry condition. Industry surveys were conducted and reviewed to determine acceptable performance using the revised criteria, and test methods and verification of the methods was conducted on a representative subset of products.

C2.3 Pass/fail provisions for structural performance

General comments on the structural performance sections indicated the instructions were not as clear as they could be and even sometimes in conflict. In addition, concerns were expressed about applying structural performance criteria to daily mill quality assurance evaluations. Finally, there were questions about the linearity of deflection requirements for a given increase in spans. The following changes were made:

a. Revisions to the sections describe the test provisions more clearly. Each possible scenario is described independently. The actual percentage resulting in passing results is specified for each test and criterion explicitly.

b. Where appropriate, a clause was added to each performance test stating that the average of the tests should conform to the designated requirement.

C2.4 Exposure 2

This exposure classification was deleted due to the lack of use by the industry.

C2.5 Stability Index

The stability index was deleted due to the use of linear expansion as the primary method to determine dimensional stability.

C3 Edition PS 2-10

After considerable technical review by members of the PS 2 Standing Committee, the Standard was revised to address the following technical and informational aspects.

C3.1 Labeling of panel thickness

In response to consumer complaints regarding panel thickness tolerances that created the potential for labeling being out of compliance with NIST Handbook 130 and 133, the Standard was revised to create a Performance Category based on customary thickness notations used in U.S. model building codes. In addition, panel labeling requirements were changed to require the Performance Category and decimal thickness representation.

C3.2 Formaldehyde appendix

In response to national and international regulations of formaldehyde emissions from some wood products, an informational appendix was added to review those regulations with respect to PS 2 panels.

C3.3 Environmental attributes and green building rating systems.

An informational appendix was added to review environmental attributes of PS 2 panels with respect to various green building rating systems.

C3.4 Technical revisions.

A review of technical provisions and terminology led to various changes to reflect industry practice. These included revisions to clarify the dry test condition and the “20” span rating. Fastener load values were modified to better reflect panel performance characteristics and to respond to increased code provisions for fastening requirements.

C4 Edition PS 2-18

After considerable technical review by members of the PS 2 Standing Committee, the Standard was revised to address the following technical and informational aspects.

C4.1 Measurement of dimensions

Additional details were added regarding measurement of dimensions. The term “sized for spacing” was added to denote panels that are sized for compatibility to recommended application for construction uses.

C4.2 Structural I Single Floor

Technical requirements were added for this new grade of panels.

C4.3 Deflection limits for wall sheathing

Deflection criteria for wall sheathing under uniform loads was added to the Standard to provide suitable performance for construction applications.

C4.4 Other technical and editorial revisions

Other technical and editorial revisions were made to reflect industry practices, including:

- Simplification of the Appendix on labeling
- Deletion of the Appendix on Green Building Provisions
- Clarification that linear expansion requirements are met by testing to one method and criteria
- The title was revised to reflect the term used by U.S. model codes
- Revised definition of qualified testing and inspection agency
- Corrected air exchange rate for moisture exposure test
- Added abbreviations commonly used for labeling.

C5 Current Edition PS 2-25

The Standard was revised to align with PS 1 updates, incorporate revised tables, and improve clarity. The following changes were addressed:

- Added definitions of Lot, Span Rating, and Veneer
- Added Bending Strength information in 6.4.2.1
- Added 3/8 Category 24/0 in Table 4
- Updated Figure 6, Figure 7, and Flowchart in Appendix B
- Updated test procedure for Static Bending Stiffness capacity
- Updated Section 8 Marking and Certification. This includes:
    - Added Subsection on Accredited Certification Agency
    - Revised Qualified Inspection and Testing Agency Subsection and added Subsection on Accredited Inspection Agency and Subsection on Accredited Testing Laboratory
    - Added a Subsection on Outsourcing (subcontracting)
- Added Section 9 on Quality Assurance Requirements and added following Subsections:
    - Manufacturing Quality Program
    - Inspection and Test Program
    - Sampling
    - Corrective Action

APPENDIX D. (Nonmandatory)

Recommended Thickness Labels

D1 Recommended thickness labels

Section 5.2.1.2 specifies thickness tolerances and Performance Categories for panels. Section 8.3 specifies that the panels shall be labeled with a thickness label in 1,000ths of an inch and that labeled quantity shall be within the minimum and maximum thickness specification for that Performance Category. Table D1 presents recommended thickness labels.

D2 Regulations on labeling

See Appendix E for discussion of regulations dealing with labeling.

TABLE D1. RECOMMENDED THICKNESS LABELING FOR PANELS

	Thickness Requirements for Panels[1]		
Performance Category[2]	**Minimum Thickness in (mm)**	**Maximum Thickness in (mm)**	**Recommended Thickness Label[(3)]**
1/4 PERF CAT	0.219 (5.56)	0.281 (7.14)	0.225 in
5/16 PERF CAT	0.281 (7.14)	0.344 (8.73)	0.289 in
11/32 PERF CAT	0.313 (7.94)	0.375 (9.53)	0.322 in
3/8 PERF CAT	0.344 (8.73)	0.406 (10.32)	0.354 in
7/16 PERF CAT	0.406 (10.32)	0.469 (11.91)	0.418 in
15/32 PERF CAT	0.438 (11.11)	0.500 (12.70)	0.451 in
1/2 PERF CAT	0.469 (11.91)	0.531 (13.49)	0.483 in
9/16 PERF CAT	0.531 (13.49)	0.594 (15.08)	0.547 in
19/32 PERF CAT	0.563 (14.29)	0.625 (15.88)	0.578 in
5/8 PERF CAT	0.594 (15.08)	0.656 (16.67)	0.609 in
11/16 PERF CAT	0.656 (15.67)	0.719 (18.26)	0.672 in
23/32 PERF CAT	0.688 (17.46)	0.750 (19.05)	0.703 in
3/4 PERF CAT	0.719 (18.26)	0.781 (19.84)	0.734 in
13/16 PERF CAT	0.781 (19.84)	0.844 (21.43)	0.788 in
7/8 PERF CAT	0.831 (21.11)	0.919 (23.34)	0.849 in
1 PERF CAT	0.950 (24.13)	1.050 (26.67)	0.970 in
1-1/8 PERF CAT	1.069 (27.15)	1.181 (30.00)	1.091 in
1-1/4 PERF CAT	1.188 (30.16)	1.313 (33.34)	1.213 in

[1]Thickness requirements are based on a tolerance of ± 0.8 mm (1/32 in) for panels with Performance Categories of 13/16 and less and ± 5% for panels with Performance Categories greater than 13/16 unless a closer tolerance is determined through qualification testing. Inch units are presented as primary units due to customary practice in the United States.

[2] Acceptable abbreviations are PERF CAT, CAT or Category.

[3] The panel manufacturer may label with any thickness value provided the product complies with Section 5.2.1.2. The recommended thickness label for categories less than 9/16 is 3% above the minimum. The recommended thickness label for categories greater than or equal to 9/16 are the minimum values for PS 1 sanded panels.

APPENDIX E. (Nonmandatory)

Labeling Guidelines Based on the Uniform Packaging and Labeling Regulations of NIST Handbook 130 and Handbook 133

E1 Summary

E1.1 When intended for sale or distribution, the labeling of the panels should conform to the requirements of the Uniform Packaging and Labeling Regulation. This section provides references to standards applicable to labeling and packaging.

E2 Background

E2.1 The National Institute of Standards and Technology of the U.S. Department of Commerce ("NIST") promotes the development of standards to be applied across industry and supports the publishing of NIST Handbook 130, "Uniform Laws and Regulations in the areas of legal metrology and engine fuel quality." NIST Handbook 130 is a compilation of the latest uniform laws and regulations regarding packaging and labeling requirements adopted by the National Conference on Weights and Measures, Inc. ("NCWM") and is intended to represent standards to be adopted into law by the weights and measures jurisdictions of the United States.

E2.2 Procedures used by Weights and Measures inspectors are included in NIST Handbook 133, "Checking the Net Contents of Packaged Goods"

E2.3 For information, a complete copy of the most recent version of NIST Handbook 130 and 133 are available at:

https://www.nist.gov/publications/

APPENDIX F. (Nonmandatory)

Formaldehyde

F1 General

Formaldehyde is a simple naturally occurring chemical made of carbon, oxygen, and hydrogen. It is produced by the human body and animals and plants. It is also formed by combustion and is an industrial chemical widely used in the manufacture of many consumer products.

Background information on formaldehyde and health concerns related to elevated levels in indoor air can be found at https://www.epa.gov/formaldehyde

F2 Formaldehyde regulations

F2.1 There are no national or state regulations of formaldehyde emissions expressly stated for PS 2 structural panels. This is mainly due to the very low emission rates demonstrated by PS 2 Wood Structural Panels.

F2.2 U.S. Department of Housing and Urban Development Rules and Regulations 24 CFR 3280 for manufactured housing includes § 3280.308 "Formaldehyde emission controls for certain wood products," that deals with formaldehyde emissions from particleboard and plywood. The regulations establish limits for formaldehyde emission levels and ongoing evaluation requirements.

PS 2 Plywood is made predominantly with phenol-formaldehyde adhesives. When made as such, it is exempt from the HUD requirements. Other PS 2 Structural Panels are not explicitly referenced in the HUD requirements.

F2.3 California Air Resources Board (CARB) Airborne Toxic Control Measure (ATCM) for Composite Wood Products (see: http://www.arb.ca.gov/research/indoor/formaldehyde.htm**)**

The CARB ATCM for Composite Wood was approved for implementation on January 1, 2009. The scope of the Standard is particleboard, Medium Density Fiberboard (MDF) and hardwood plywood. Section § 93120.1 "Definitions" explicitly excludes PS 2 Structural Panels and other structural wood products from the scope of the Standard as follows:

> (8) "Composite wood products" means hardwood plywood, particleboard, and medium density fiberboard. "Composite wood products" does not include hardboard, structural plywood as specified in the "Voluntary Product Standard - Structural Plywood" (PS 1-07), structural panels as specified in the "Voluntary Product Standard – Performance Standard for Wood-Based Structural-Use Panels" (PS 2-04), structural composite lumber as specified in "Standard Specification for Evaluation of Structural Composite Lumber Products" (ASTM D5456-06), oriented strand board, glued laminated timber as specified in "Structural Glued Laminated Timber" (ANSI A190.1-2002), prefabricated wood I-joists as specified in "Standard Specification for Establishing and Monitoring Structural Capacities of Prefabricated Wood I-Joists" (ASTM D5055-05), finger-jointed lumber, or "composite wood products" used inside of new vehicles as defined in Section 430 of the California Vehicle Code (excluding recreational vehicles), railcars, boats, aerospace craft, or aircraft.

F2.4 National "Formaldehyde Standards for Composite Wood Act"

The Formaldehyde Standards for Wood Composites Act was signed into law on July 7, 2010. With respect to PS 2 panels, this law is identical to the CARB ATCM for Composite Wood (see Section F2.3). PS 2 panels are exempt from the scope of the Formaldehyde Standards for Composite Wood Act. For further information, see: https://www.epa.gov/

F3 Formaldehyde emission from PS 2 Structural Panels

F3.1 Information on formaldehyde emission from PS 2 panels is available from APA in Technical Note J330, "Formaldehyde and Engineered Wood Products" (see: www.apawood.org).