US 20230032022A1

(19) United States

(12) Patent Application Publication

(10) Pub. No.: US 2023/0032022 A1

(43) Pub. Date: Feb. 2, 2023

Klimov et al.

(54) **PHOTONIC BOLOMETER AND PERFORMING BROADBAND HIGH-ABSORPTION PHOTONIC BOLOMETRY**

(71) Applicant: **Government of the United States of America, as represented by the Secretary of Commerce**, Gaithersburg, MD (US)

(72) Inventors: **Nikolai Nikolaevich Klimov**, Ellicott City, MD (US); **Nathan Andrew Tomlin**, Boulder, CO (US); **Christopher Shing-Yu Yung**, Louisville, CO (US)

(21) Appl. No.: **17/957,817**

(22) Filed: **Sep. 30, 2022**

Related U.S. Application Data

(63) Continuation-in-part of application No. 17/486,852, filed on Sep. 27, 2021.

(60) Provisional application No. 63/083,218, filed on Sep. 25, 2020, provisional application No. 63/251,186, filed on Oct. 1, 2021.

Publication Classification

(51) **Int. Cl.**

G01J 5/58	(2006.01)
G01J 5/0818	(2006.01)
G01J 5/08	(2006.01)
G01J 5/20	(2006.01)

(52) **U.S. Cl.**

CPC ***G01J 5/58*** (2013.01); ***G01J 5/0818*** (2013.01); ***G01J 5/0853*** (2013.01); ***G01J 5/20*** (2013.01)

(57) **ABSTRACT**

A photonic bolometer includes: a photonic chip; a weak thermal link; a thermally-isolated member, and the weak thermal link thermally isolates the thermally-isolated member from the photonic chip; a photonic temperature sensor; a chip waveguide in optical communication with the photonic temperature sensor; and a photon absorber that receives incident radiation light, increases temperature due to absorption of the incident radiation light, heats the photonic temperature sensor in response to receipt of the incident radiation light, and changes the resonance frequency of the photonic temperature sensor in response to receiving the incident radiation light.

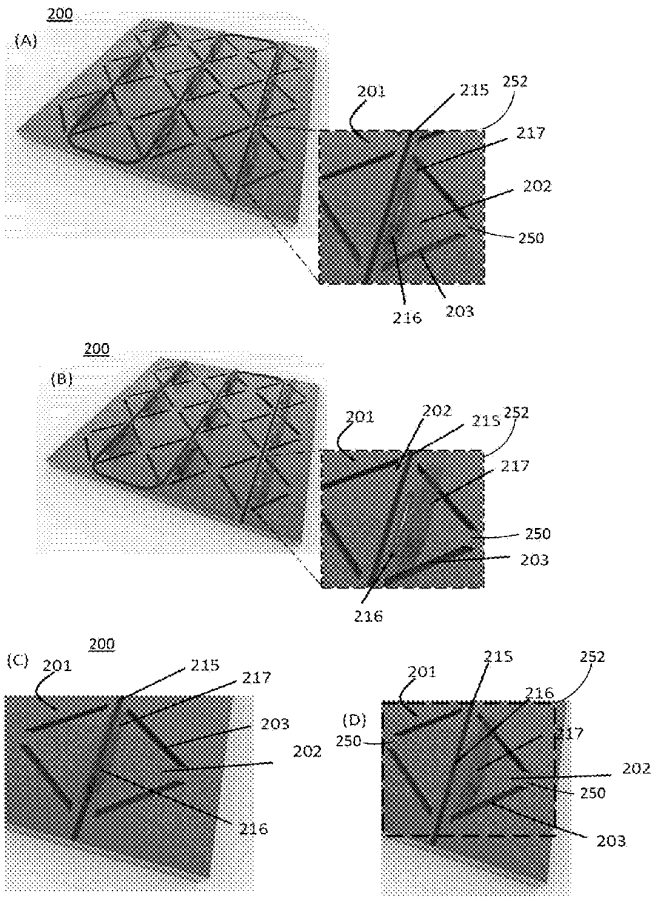

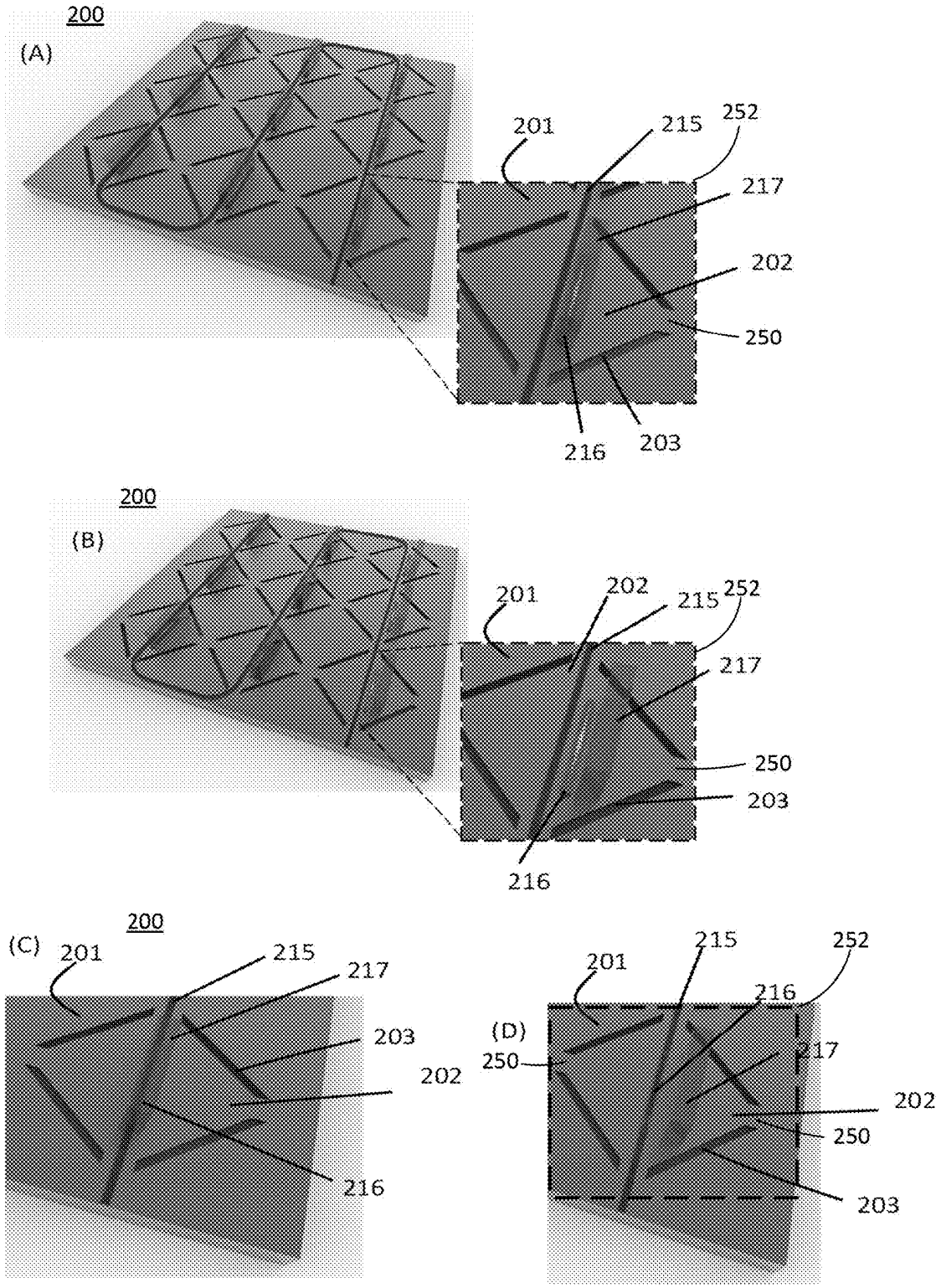
200
(A)
201
215
252
217
202
250
216
203
200
(B)
201
202
215
252
217
250
203
216
200
(C)
201
215
217
203
202
216
(D)
201
215
252
216
250
217
202
250
203

FIG. 1

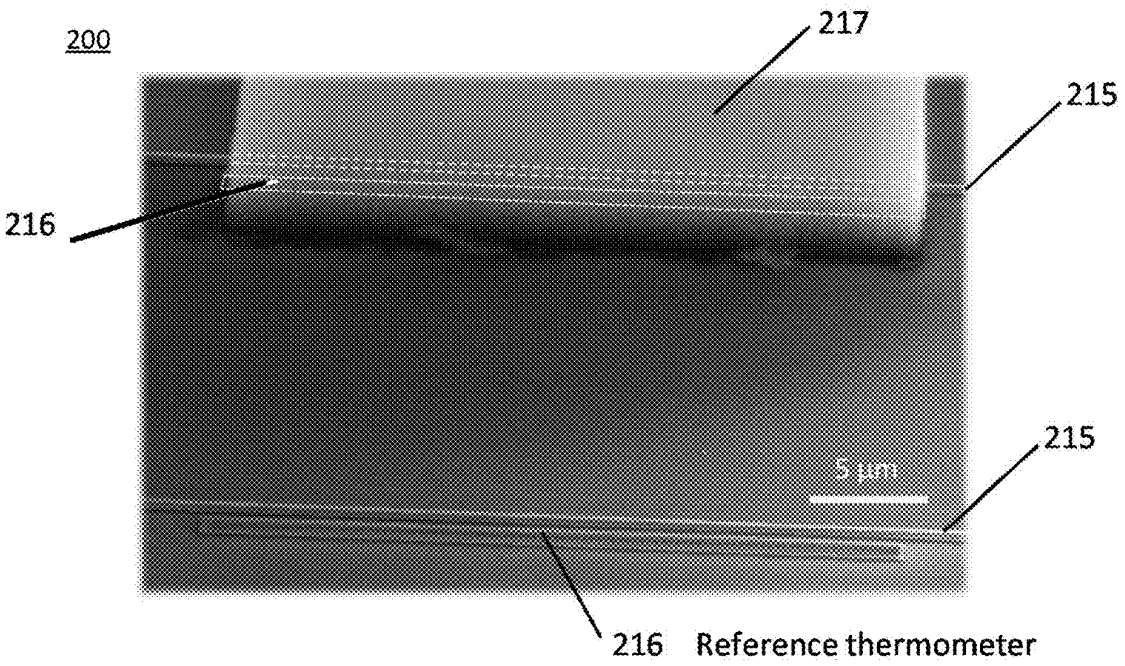

FIG. 2

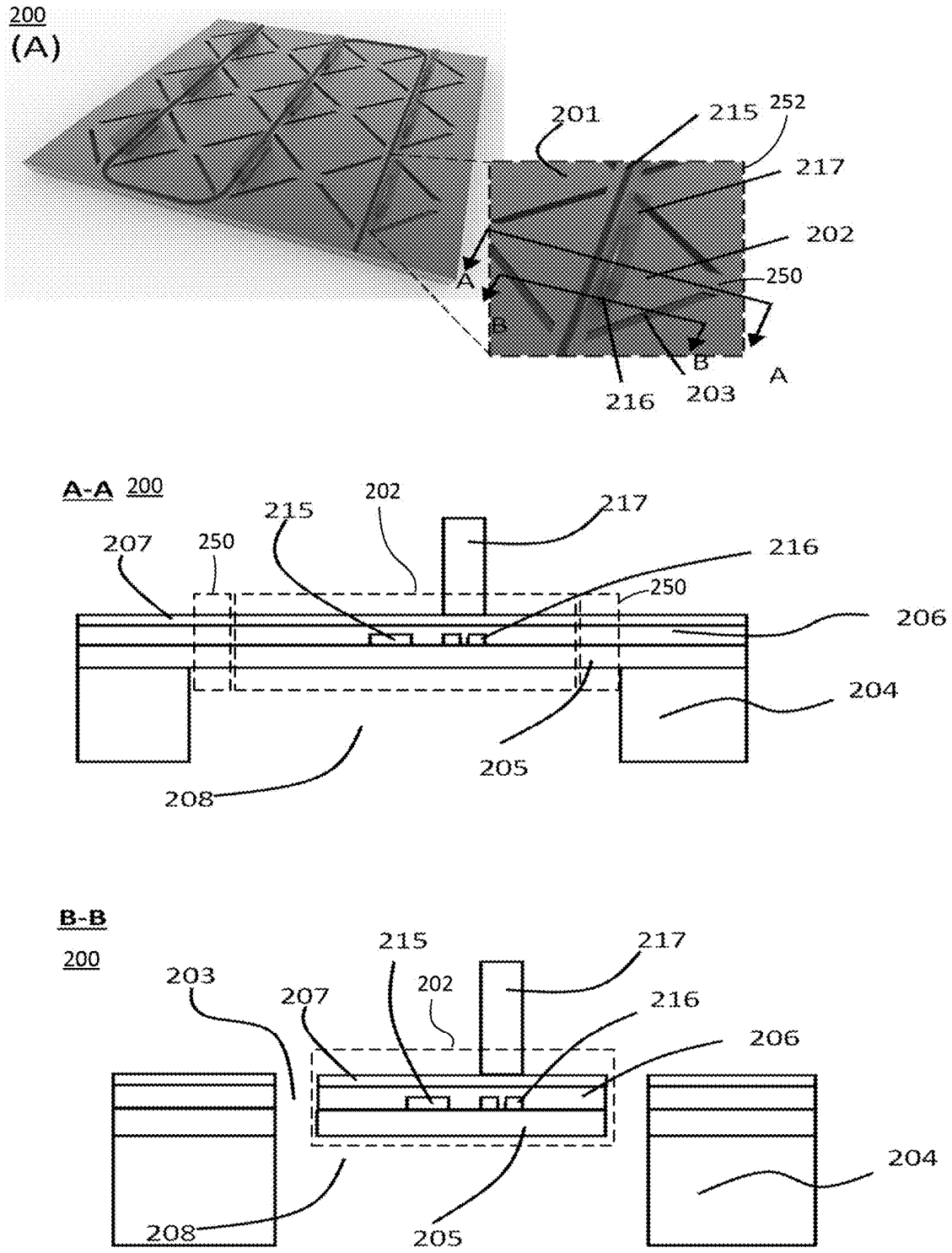
200
(A)
201
215
252
217
202
250
A
B
B
A
216
203
A-A 200
207
250
215
202
217
216
250
206
204
208
205
B-B
200
203
207
215
202
217
216
206
204
208
205

FIG. 3

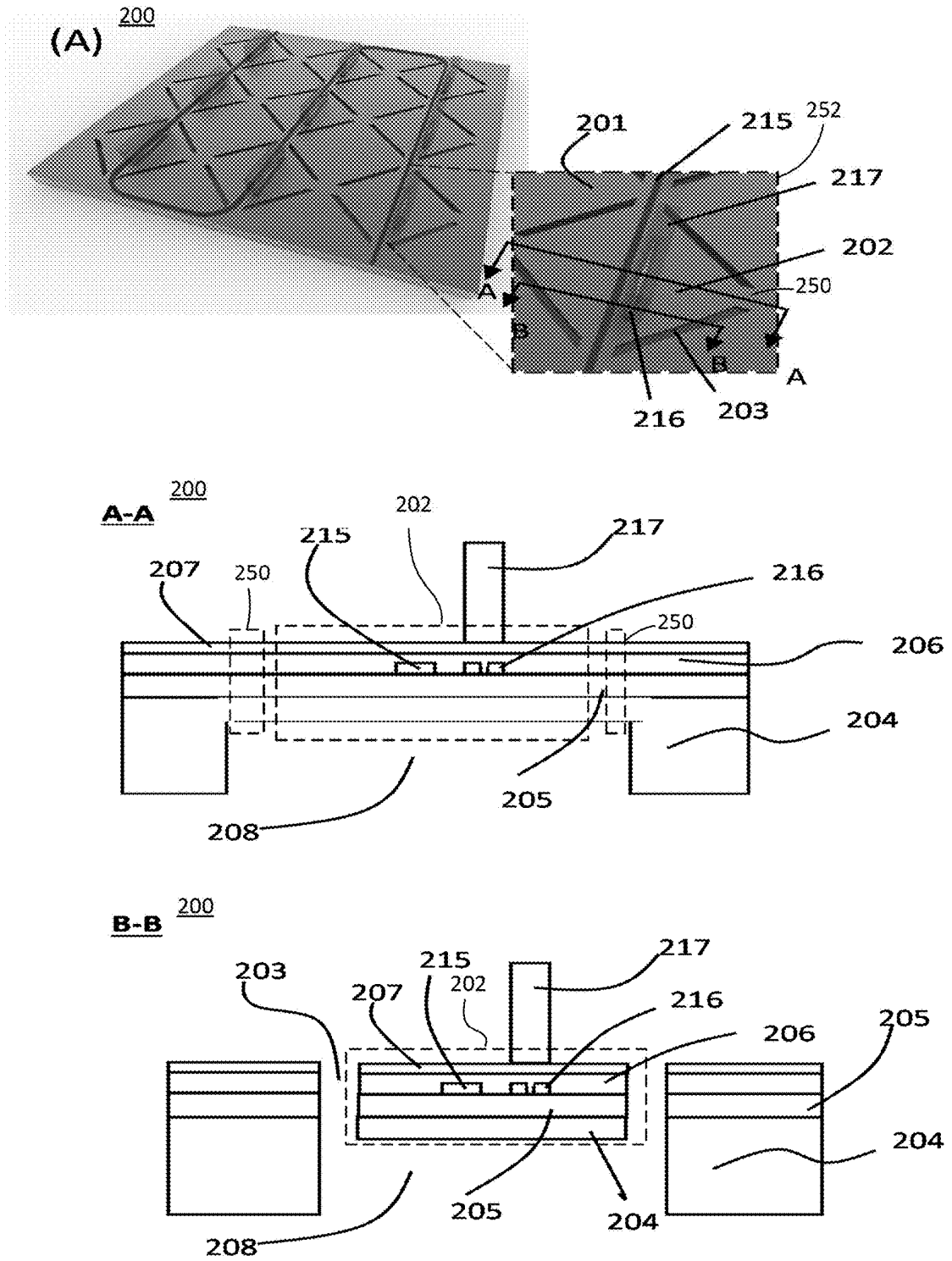
(A)
200
201
215
252
217
202
250
A
B
B
A
216
203
A-A
200
202
215
217
207
250
216
250
206
204
205
208
B-B
200
203
215
217
207
202
216
206
205
204
205
204
208

FIG. 4

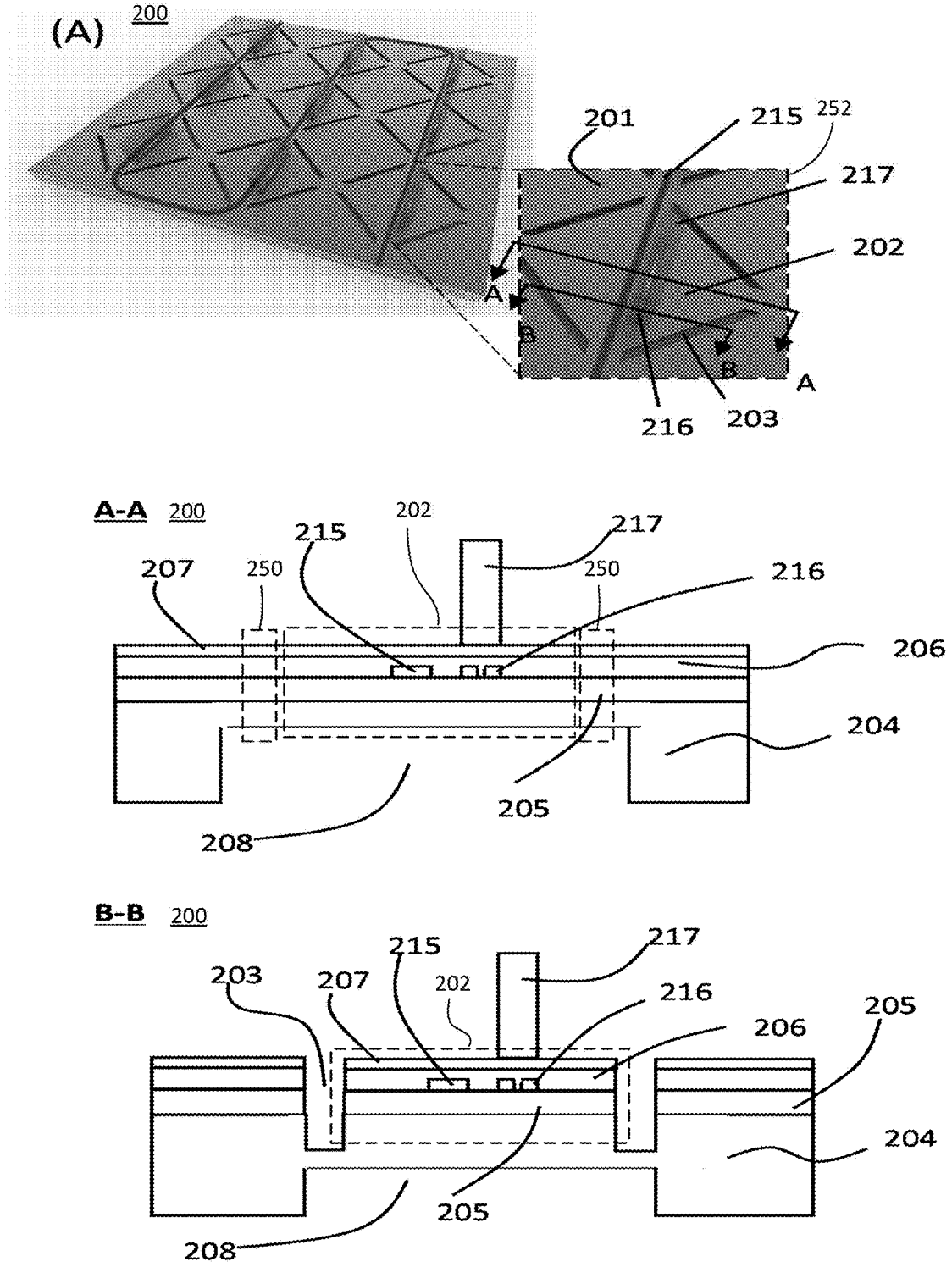
(A)
200
201
215
252
217
202
A
B
B
A
216
203
A-A
200
202
215
217
207
250
250
216
206
204
205
208
B-B
200
215
217
203
207
202
216
206
205
204
205
208

FIG. 5

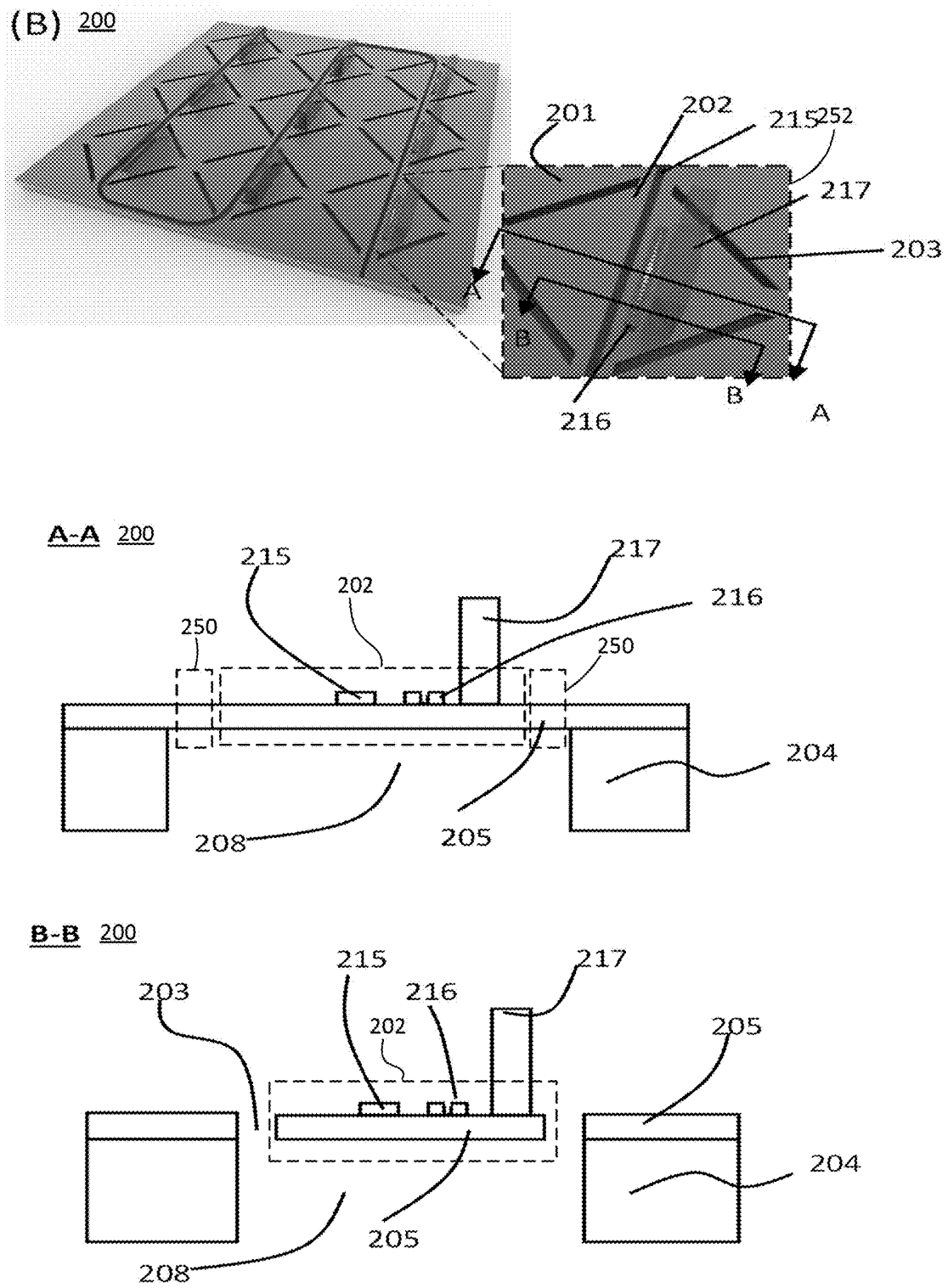
(B) 200
201
202
215
252
217
203
A
B
B
A
216
A-A 200
215
217
202
216
250
250
204
208
205
B-B 200
215
217
203
216
202
205
204
205
208

FIG. 6

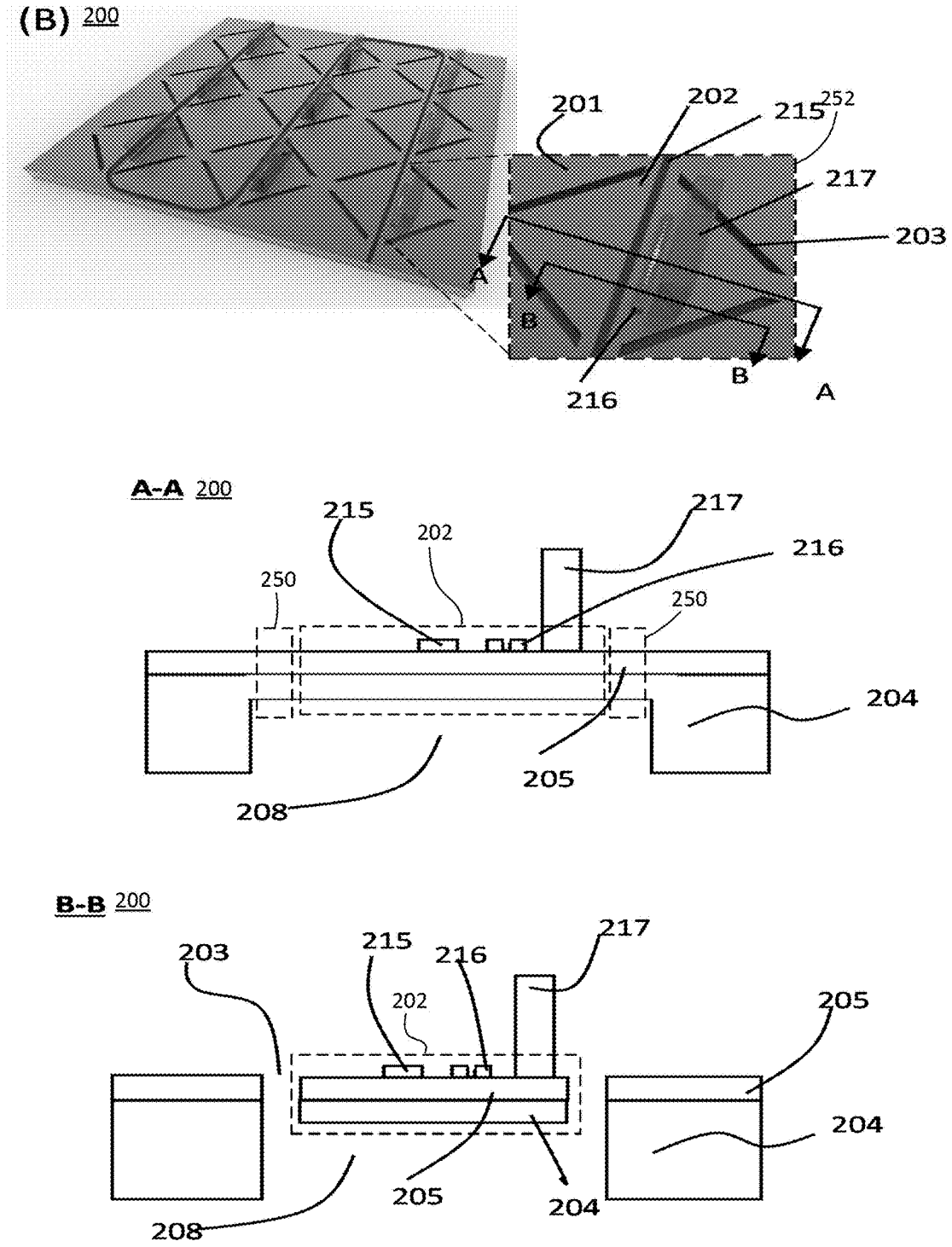
(B) 200
201
202
215
252
217
203
A
B
B
A
216
A-A 200
215
202
217
216
250
250
204
205
208
B-B 200
203
215
216
217
202
205
204
205
204
208

FIG. 7

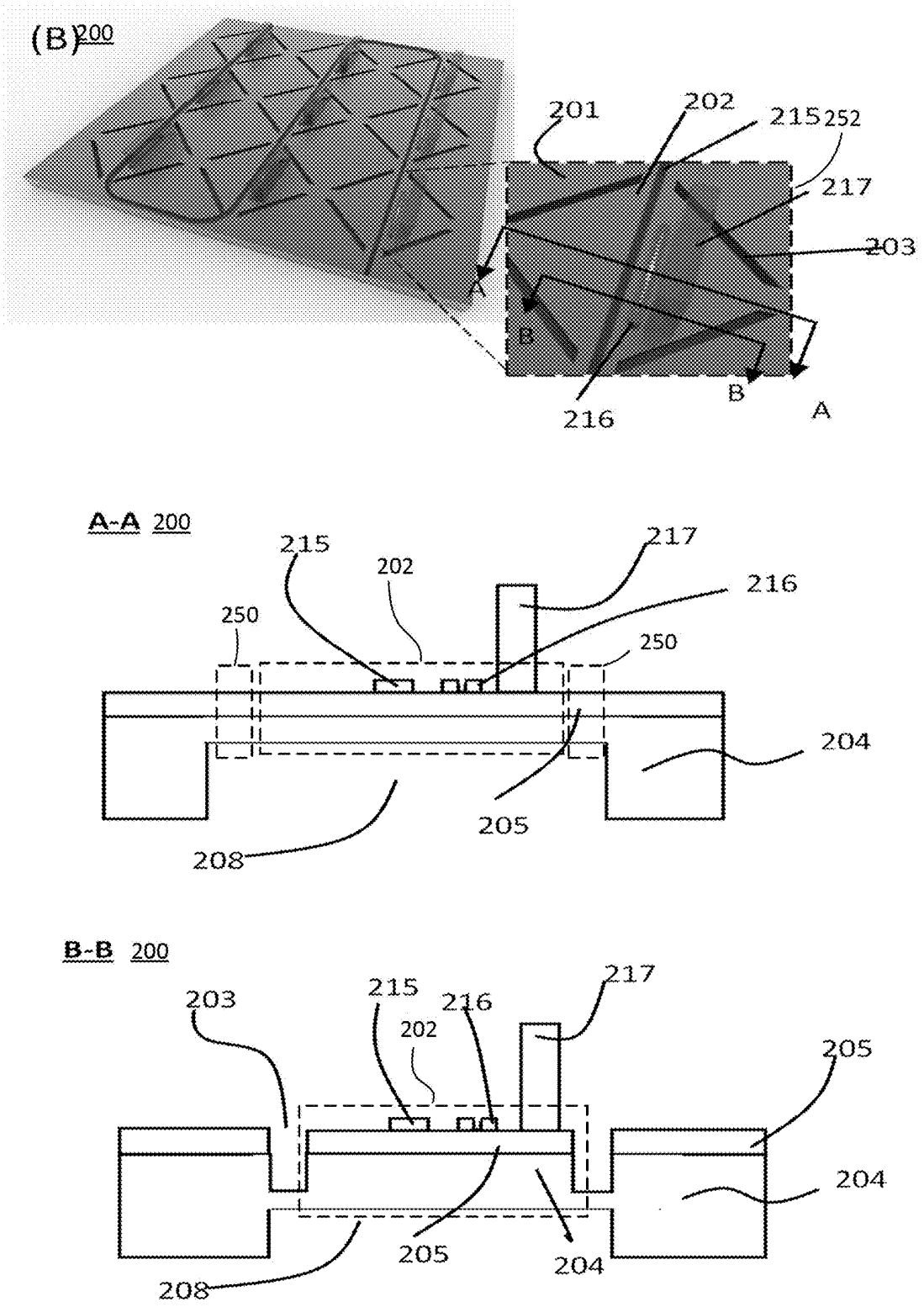
(B) 200
201
202
215
252
217
203
A
B
B
A
216
A-A 200
215
202
217
216
250
250
204
205
208
B-B 200
203
215
216
217
202
205
204
205
204
208

FIG. 8

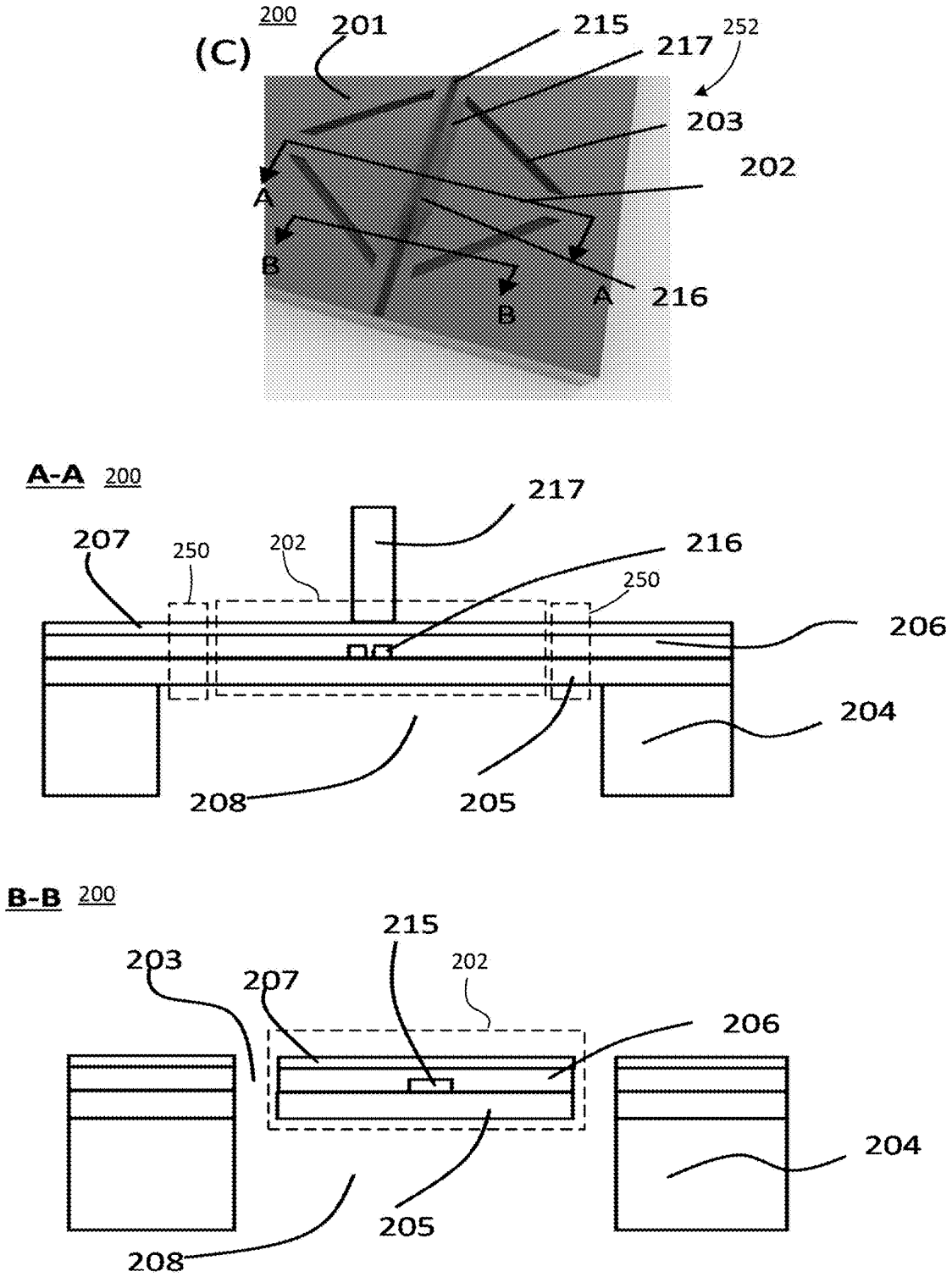
(C)
200
201
215
217
252
203
202
A
B
B
A
216
A-A
200
217
207
250
202
216
250
206
204
208
205
B-B
200
215
203
207
202
206
204
205
208

FIG. 9

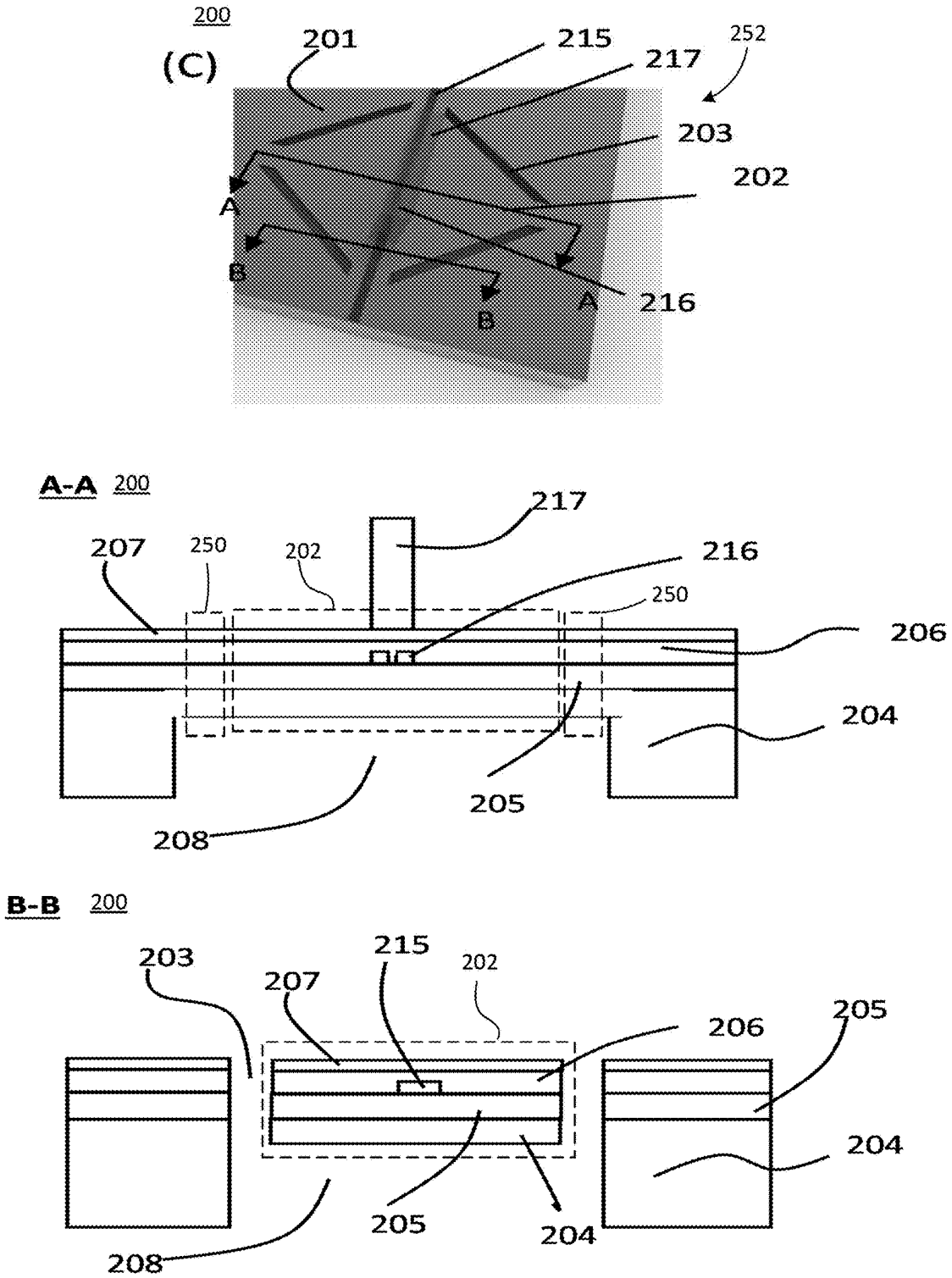
200
(C)
201
215
217
252
203
202
A
B
B
A
216
A-A 200
217
207
250
202
216
250
206
204
205
208
B-B 200
203
215
202
207
206
205
204
205
204
208

FIG. 10

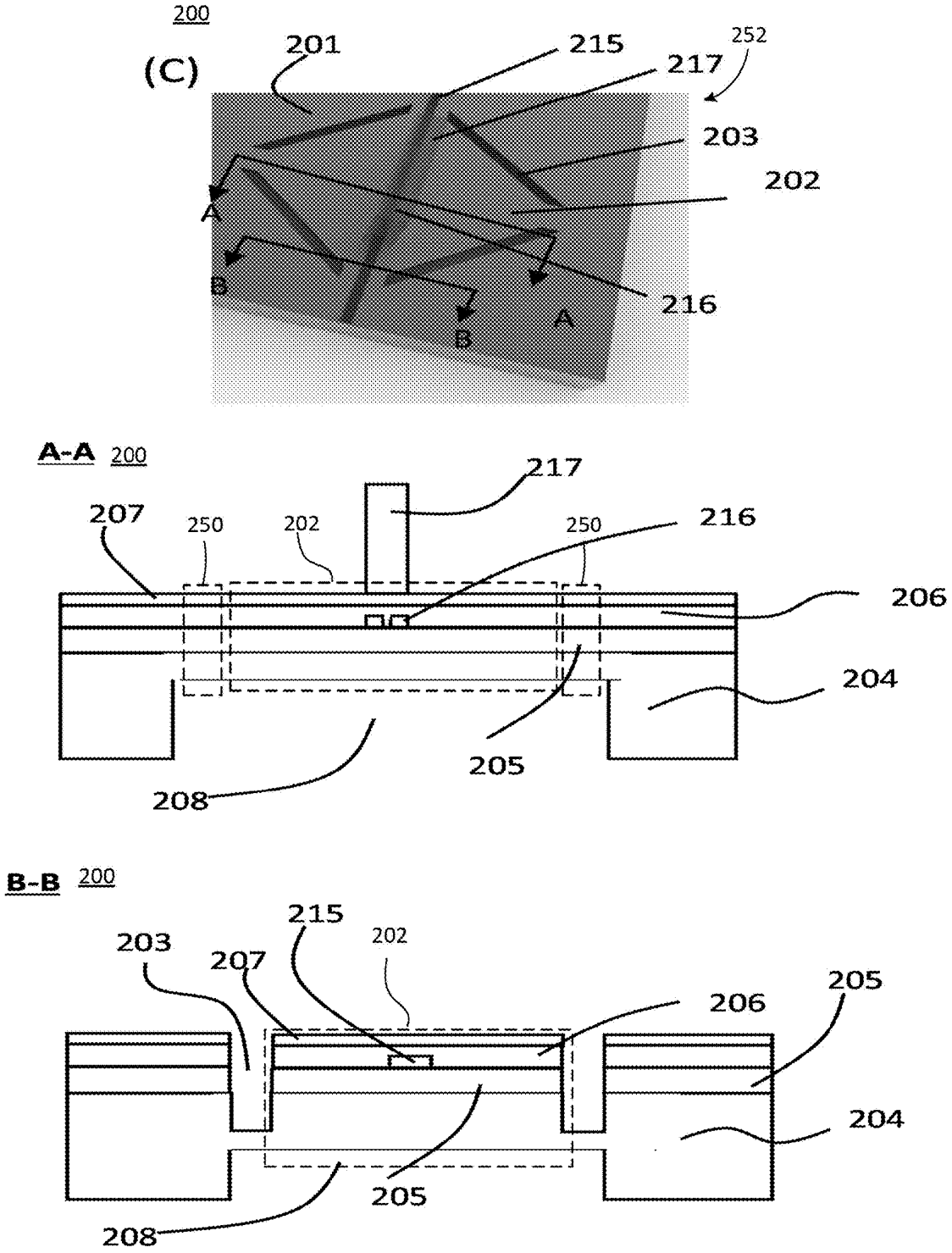
200
(C)
201
215
217
252
203
202
A
B
B
A
216
A-A 200
217
207
250
202
250
216
206
204
205
208
B-B 200
215
203
207
202
206
205
204
205
208

FIG. 11

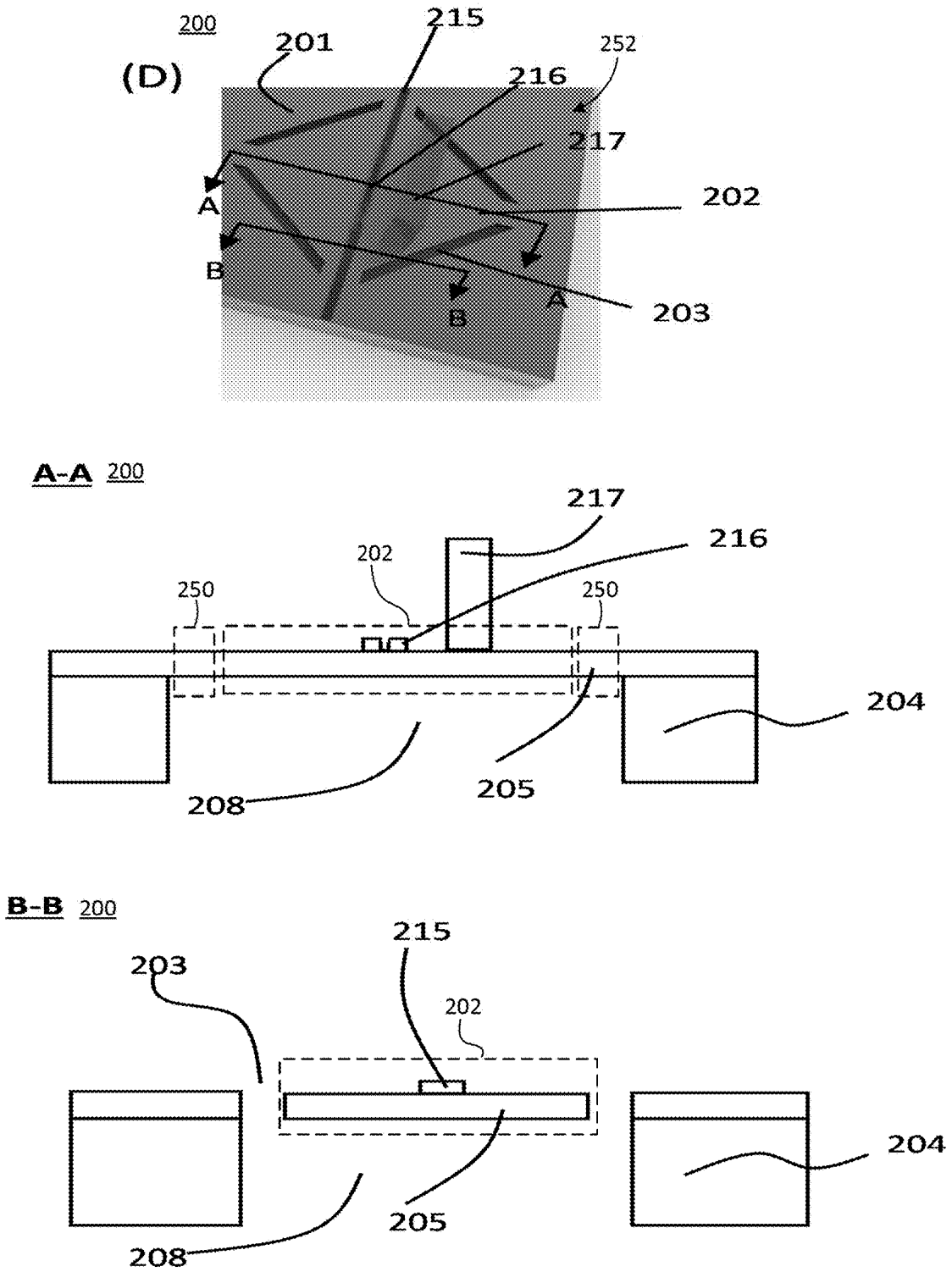
200
(D)
201
215
252
216
217
202
A
B
B
A
203
A-A 200
217
216
202
250
250
204
208
205
B-B 200
215
203
202
204
205
208

FIG. 12

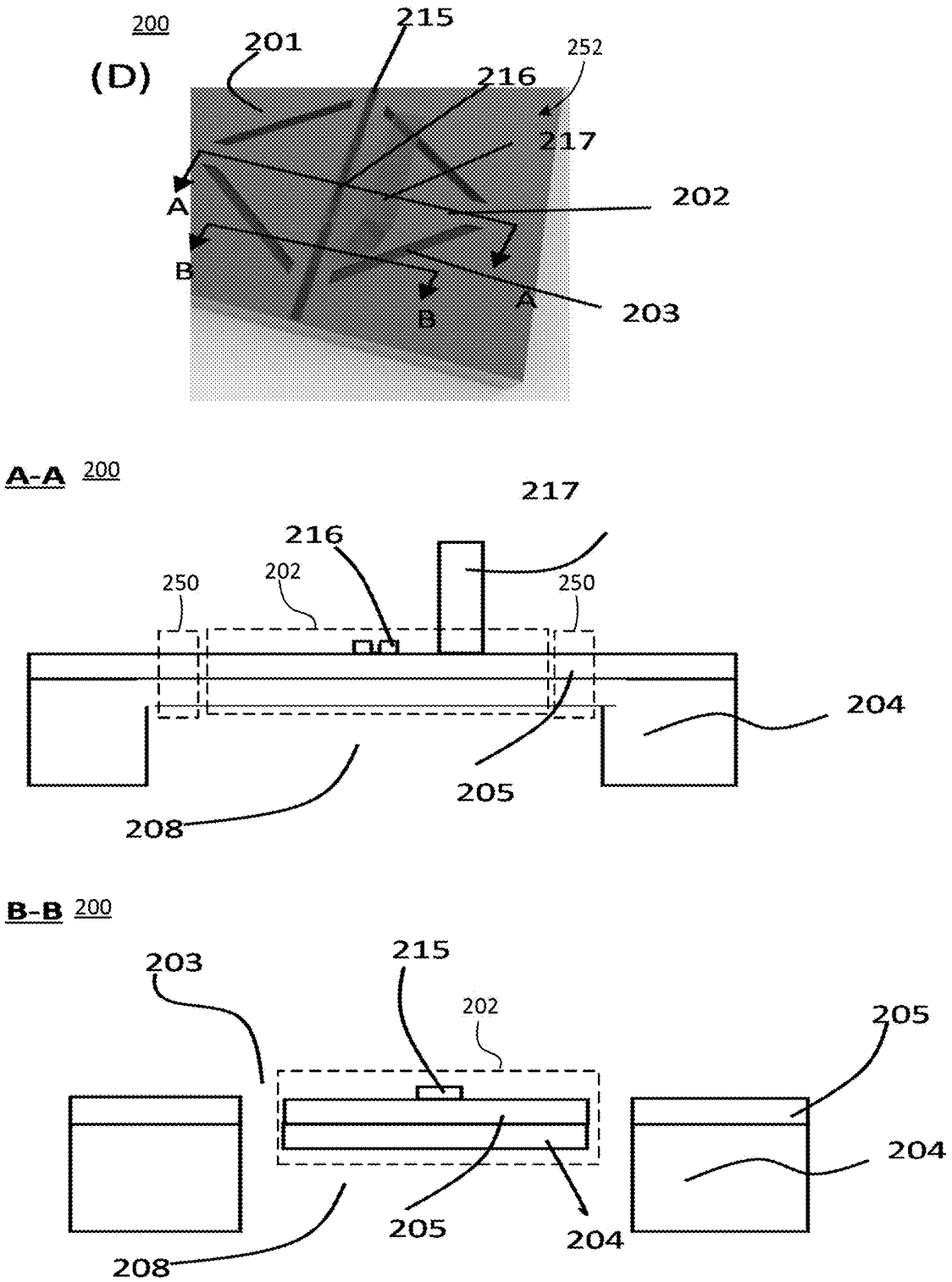
200
(D)
201
215
216
252
217
202
203
A
B
A
B
A-A 200
217
216
202
250
250
204
205
208
B-B 200
203
215
202
205
204
205
204
208

FIG. 13

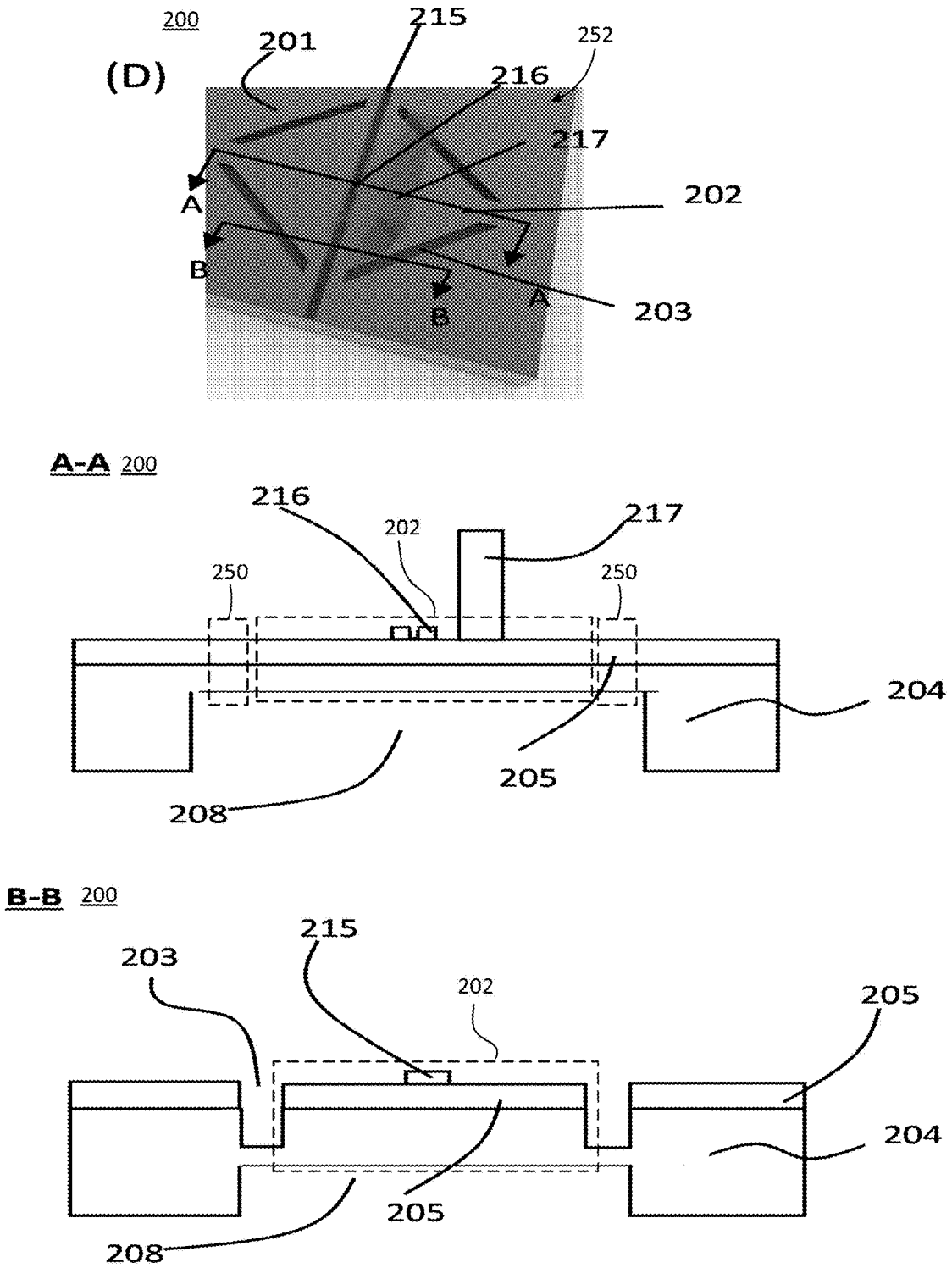
200
(D)
201
215
252
216
217
202
A
B
B
A
203
A-A 200
216
202
217
250
250
204
205
208
B-B 200
203
215
202
205
204
205
208

FIG. 14

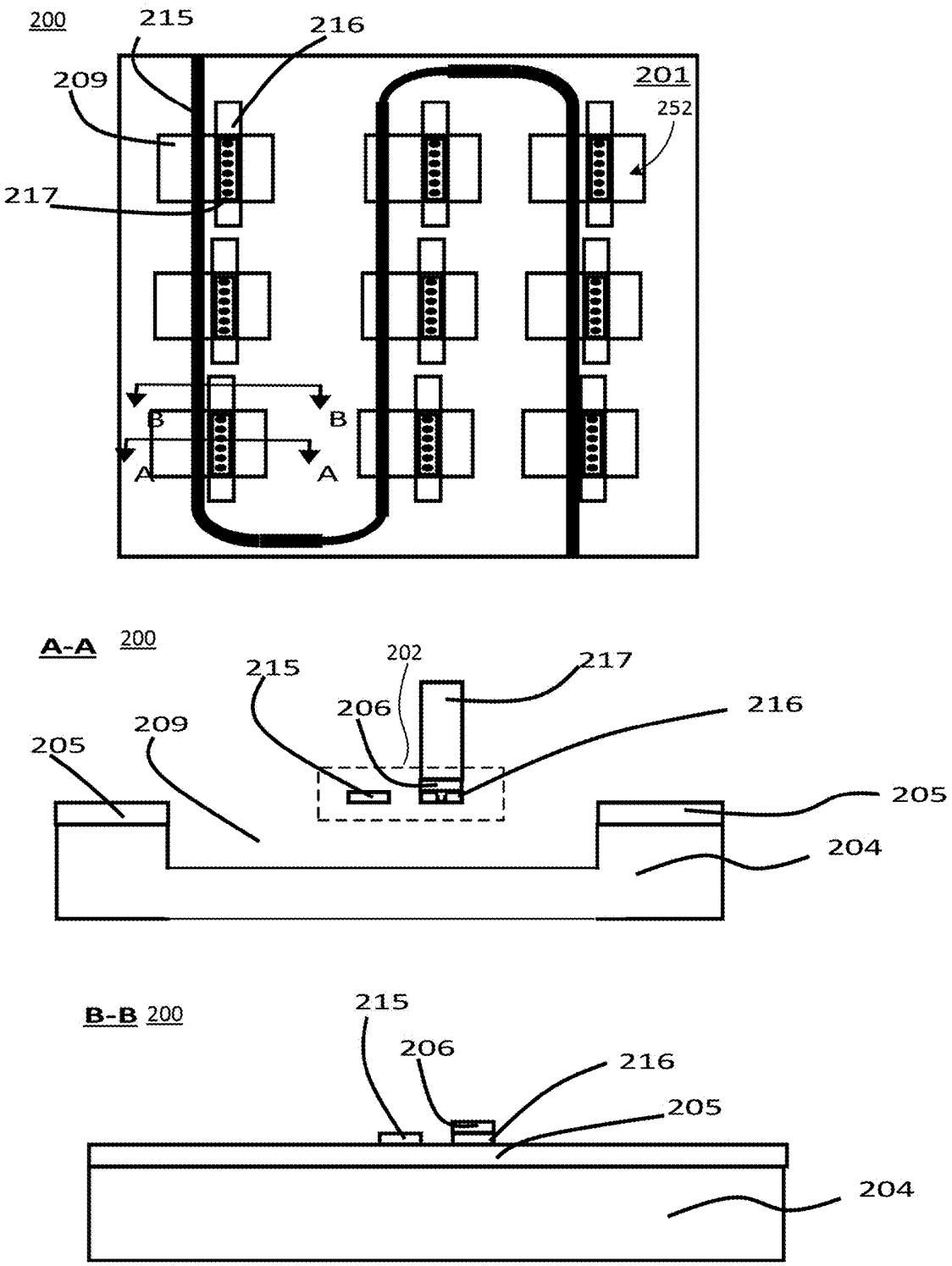
200
215
216
209
201
252
217
B
B
A
A
A-A 200
202
215
217
206
216
209
205
205
204
B-B 200
215
206
216
205
204

FIG. 15

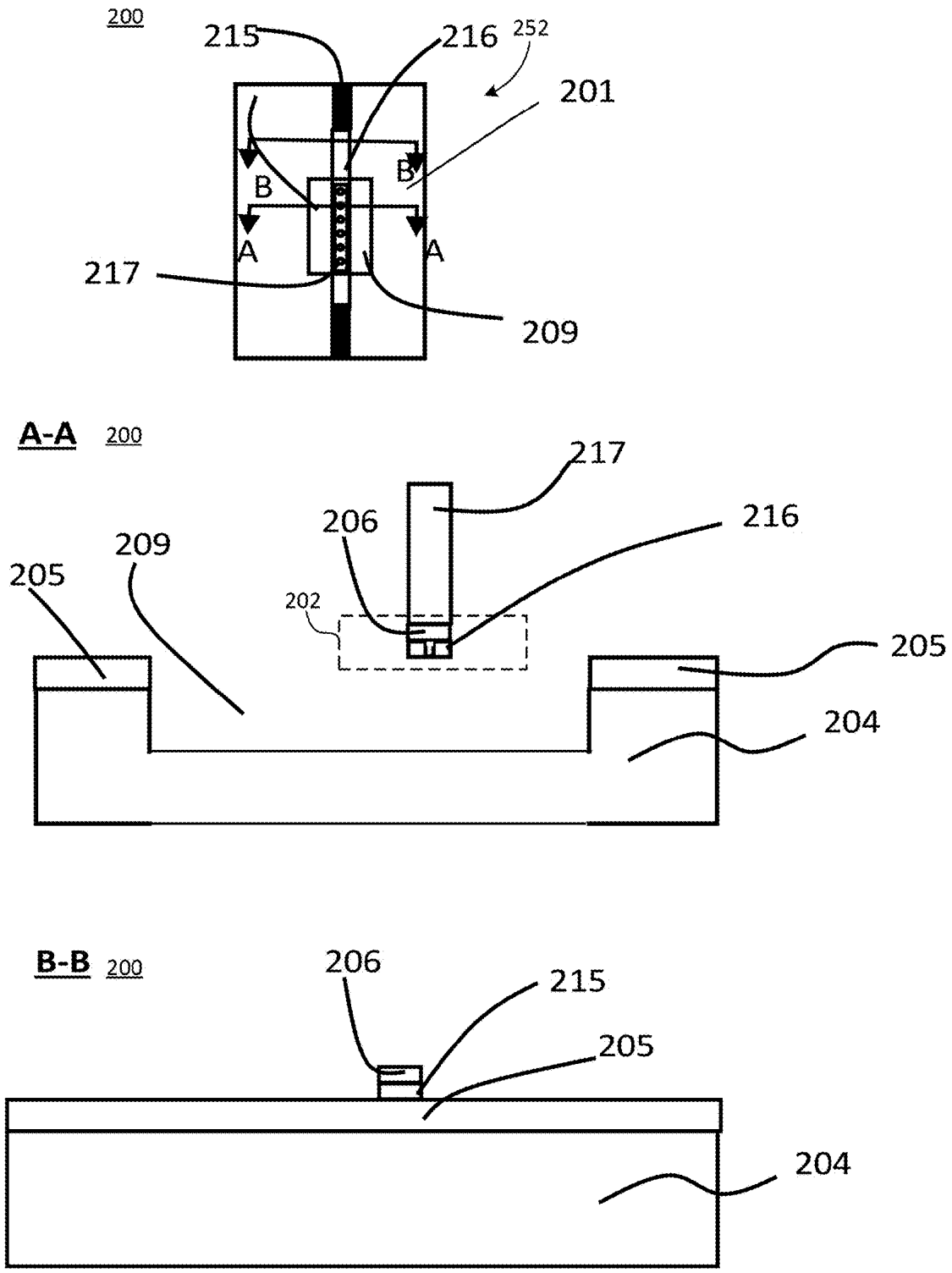
200
215
216
252
201
B
B
A
A
217
209
A-A 200
217
206
216
209
205
202
205
204
B-B 200
206
215
205
204

FIG. 16

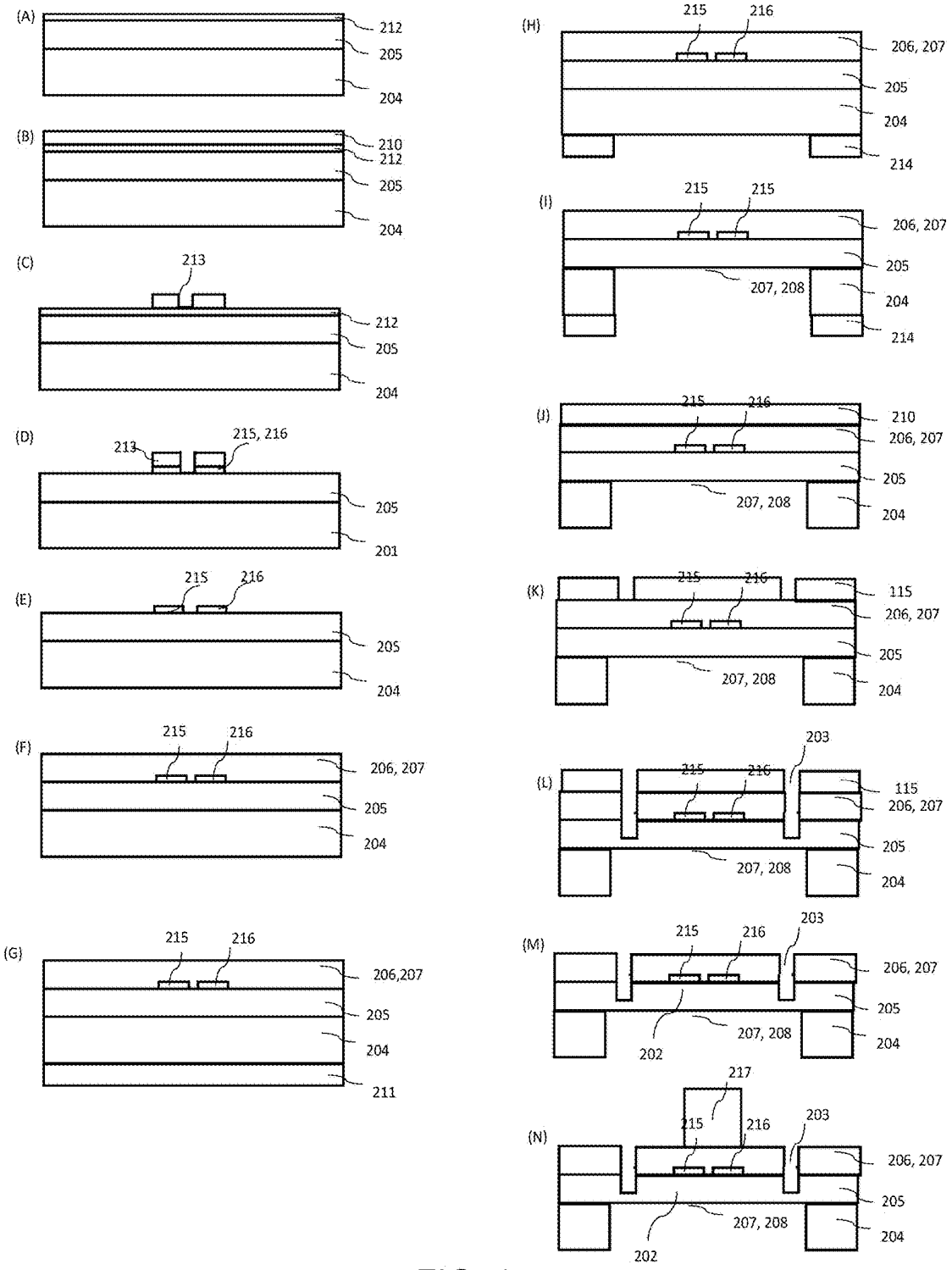
(A)
212
205
204
(B)
210
212
205
204
(C)
213
212
205
204
(D)
213
215, 216
205
201
(E)
215
216
205
204
(F)
215
216
206, 207
205
204
(G)
215
216
206,207
205
204
211
(H)
215
216
206, 207
205
204
214
(I)
215
215
206, 207
205
207, 208
204
214
(J)
215
216
210
206, 207
205
207, 208
204
(K)
215
216
115
206, 207
205
207, 208
204
(L)
203
215
216
115
206, 207
205
207, 208
204
(M)
215
216
203
206, 207
205
207, 208
202
204
(N)
217
215
216
203
206, 207
205
207, 208
202
204

FIG. 17

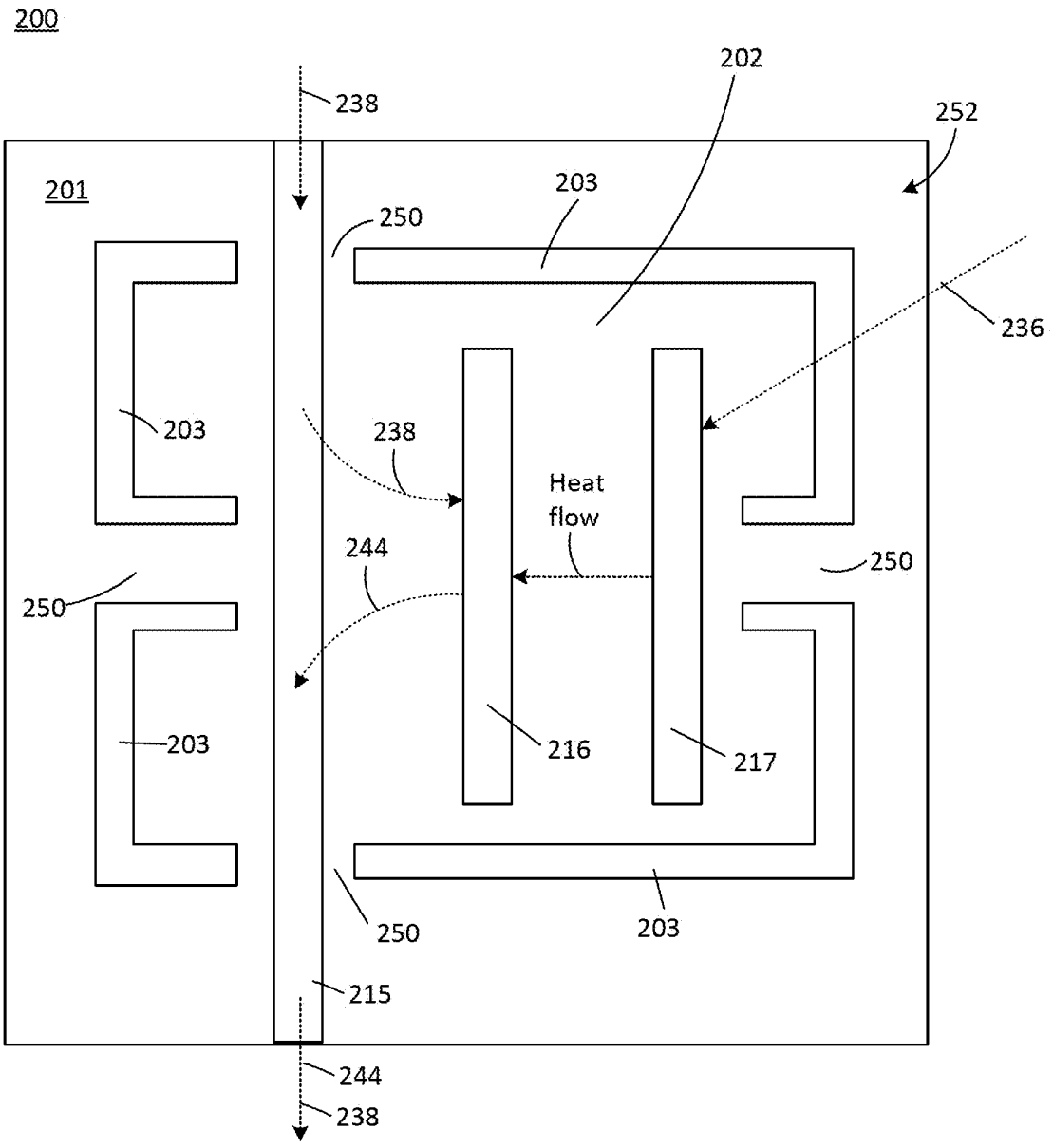
200
202
238
252
201
203
250
236
203
238
Heat
flow
244
250
250
203
216
217
250
203
215
244
238

FIG. 18

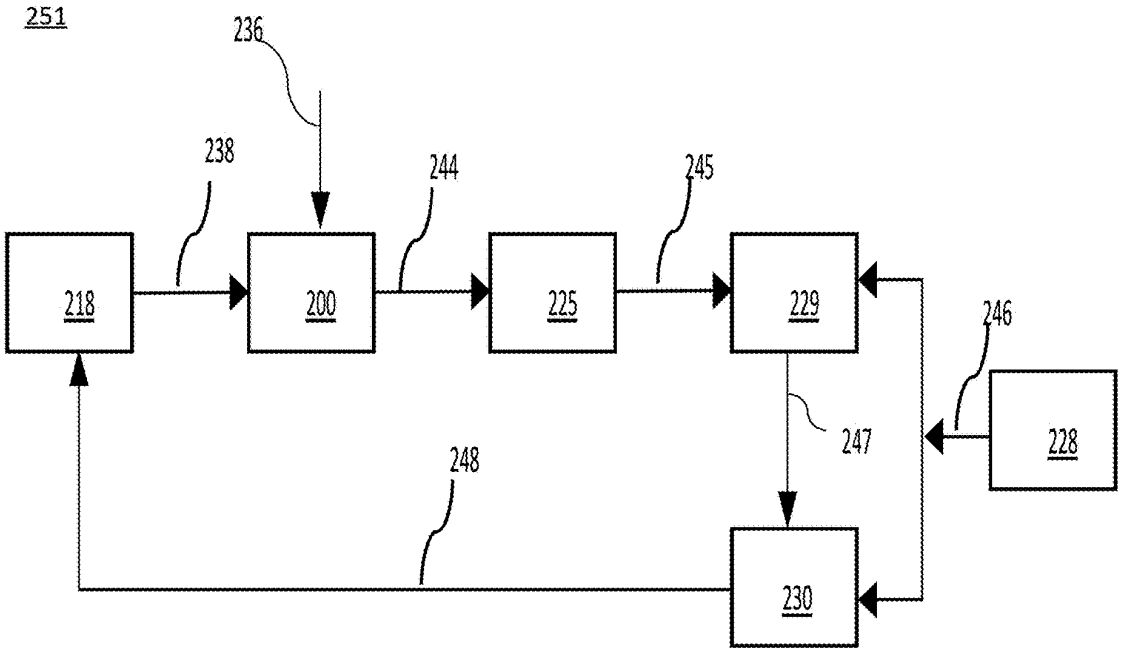

FIG. 19

(A) 251

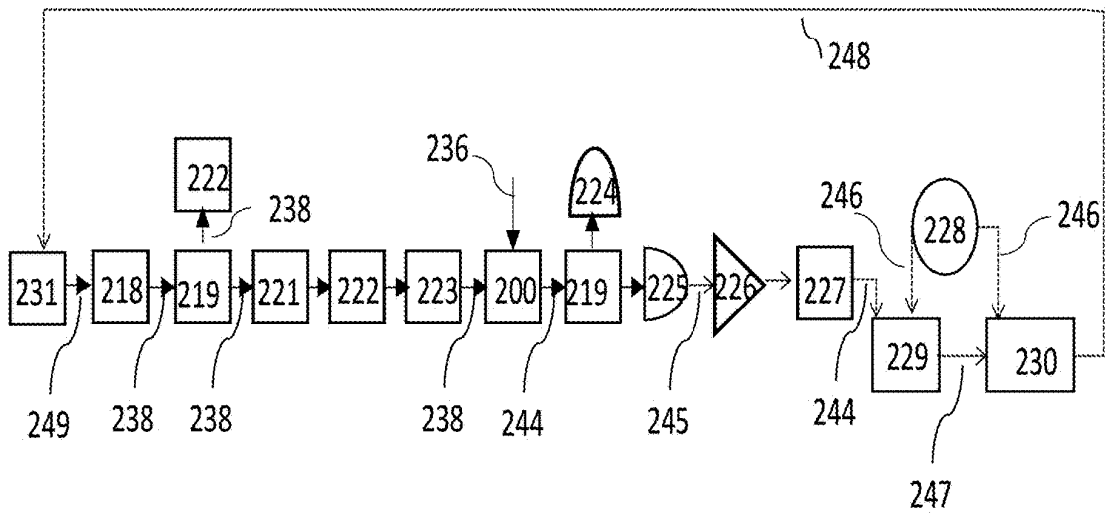

Dither laser locking :Transmission-mode measurements

(B) 251

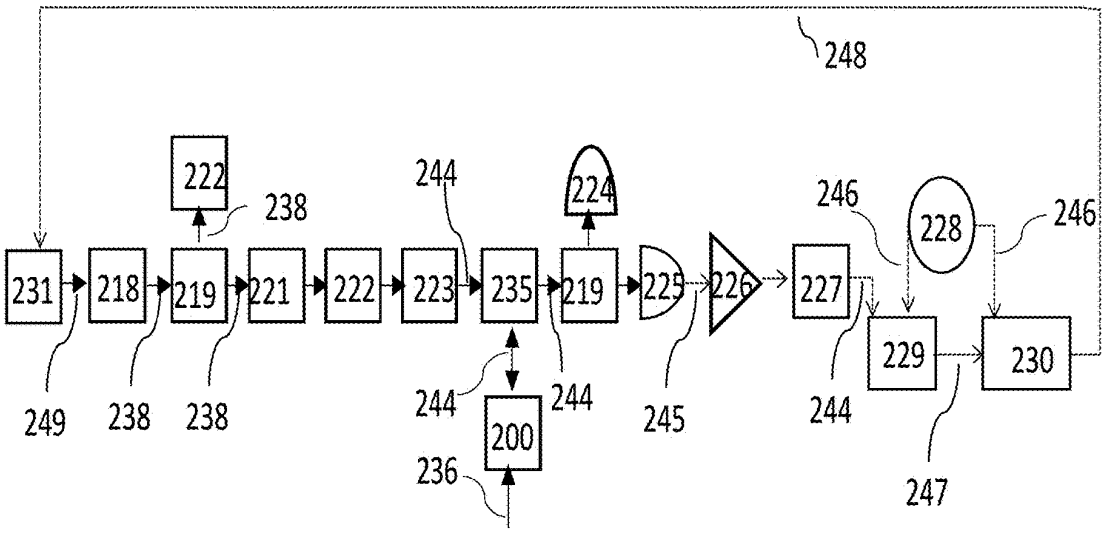

Dither laser locking: Reflection-mode measurements

FIG. 20

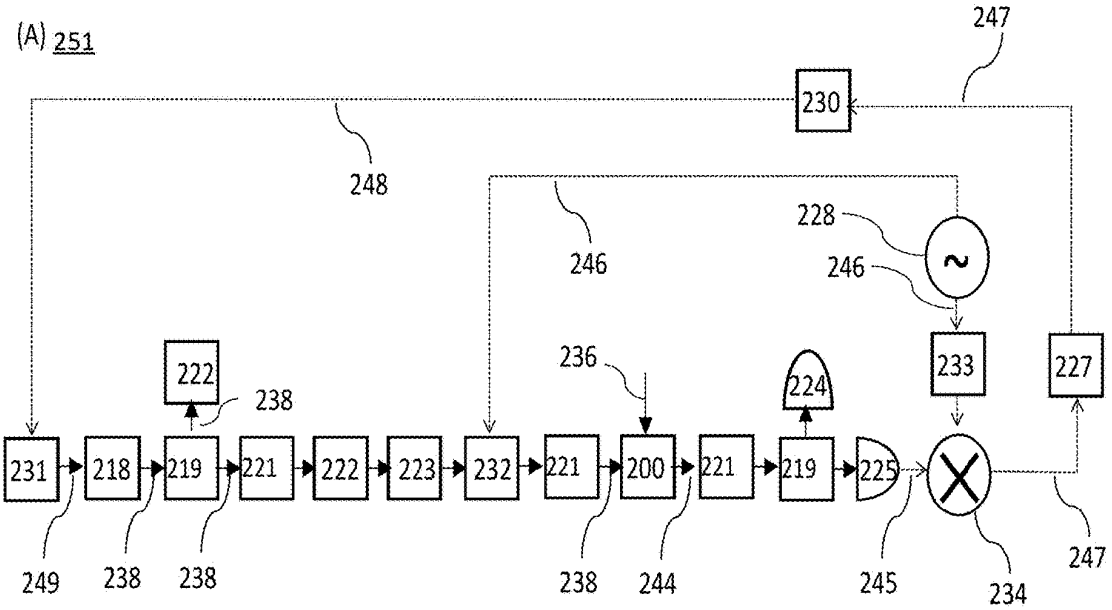

Pound-Drever-Hall laser locking: Transmission-mode measurements

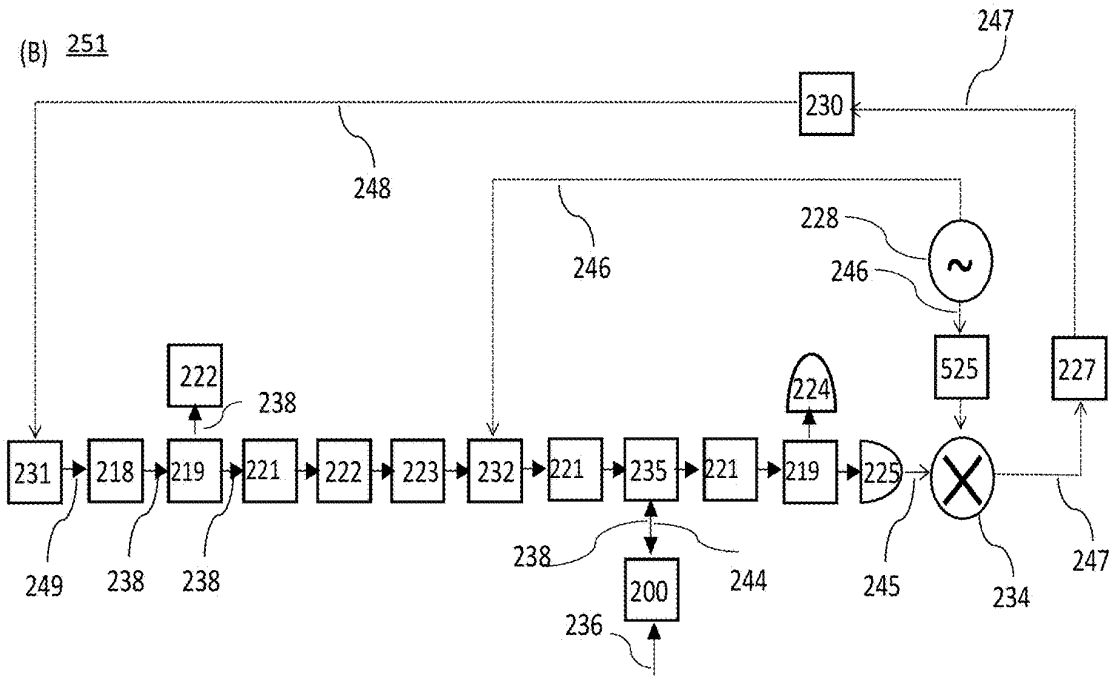

Pound-Drever-Hall laser locking: Reflection-mode measurements

FIG. 21

PHOTONIC BOLOMETER AND PERFORMING BROADBAND HIGH-ABSORPTION PHOTONIC BOLOMETRY

CROSS REFERENCE TO RELATED APPLICATIONS

[0001] This application is a continuation in part of U.S. patent application Ser. No. 17/486,852 (filed Sep. 27, 2021), which claims the benefit of U.S. Provisional Patent Application Ser. No. 63/083,218 (filed Sep. 25, 2020), which are herein incorporated by reference in their entirety. This application claims the benefit of U.S. Provisional Patent Application Ser. No. 63/251,186 (filed Oct. 1, 2021), which is herein incorporated by reference in its entirety.

STATEMENT REGARDING FEDERALLY SPONSORED RESEARCH

[0002] This invention was made with United States Government support from the National Institute of Standards and Technology (NIST), an agency of the United States Department of Commerce. The Government has certain rights in this invention.

BRIEF DESCRIPTION

[0003] Disclosed is a photonic bolometer for performing broadband high-absorption photonic bolometry, the photonic bolometer comprising: a photonic chip; a weak thermal link disposed on and in mechanical communication with the photonic chip; a thermally-isolated member disposed on the weak thermal link and in mechanical communication with the weak thermal link, such that the weak thermal link is interposed between the thermally-isolated member and the photonic chip, and the weak thermal link thermally isolates the thermally-isolated member from the photonic chip; a photonic temperature sensor disposed on the thermally-isolated member and comprising a resonance frequency from which a temperature of the thermally-isolated member is determinable and that varies with temperature of the thermally-isolated member, wherein the photonic temperature sensor receives primary probe light from a chip waveguide and produces a bolometer light from the primary probe light; the chip waveguide disposed on the thermally-isolated member in optical communication with the photonic temperature sensor and that communicates the primary probe light to the photonic temperature sensor and that monitors transmission and storage of the primary probe light by the photonic temperature sensor, wherein the chip waveguide receives the bolometer light from the photonic temperature sensor to determine the temperature of the thermally-isolated member via a change in resonance frequency of the photonic temperature sensor; and a photon absorber disposed on the thermally-isolated member in thermal communication with the photonic temperature sensor and that receives incident radiation light, increases temperature due to absorption of the incident radiation light, heats the photonic temperature sensor in response to receipt of the incident radiation light, and changes the resonance frequency of the photonic temperature sensor in response to receiving the incident radiation light.

[0004] Disclosed is a photonic bolometry system, comprising: a chip probe light source that receives a control light signal and produces a primary probe light based on the control light signal; a photonic bolometer in optical communication with the chip probe light source and that receives the primary probe light from the chip probe light source, receives incident radiation light, and produces ref a**244** from the ref a**206** in response to receiving the incident radiation light, the photonic bolometer comprising: a photonic chip; a weak thermal link disposed on and in mechanical communication with the photonic chip; a thermally-isolated member disposed on the weak thermal link and in mechanical communication with the weak thermal link, such that the weak thermal link is interposed between the thermally-isolated member and the photonic chip, and the weak thermal link thermally isolates the thermally-isolated member from the photonic chip; a photonic temperature sensor disposed on the thermally-isolated member and comprising a resonance frequency from which a temperature of the thermally-isolated member is determinable and that varies with temperature of the thermally-isolated member, wherein the photonic temperature sensor receives primary probe light from a chip waveguide and produces a bolometer light from the primary probe light; the chip waveguide disposed on the thermally-isolated member in optical communication with the photonic temperature sensor and that communicates the primary probe light to the photonic temperature sensor and that monitors transmission and storage of the primary probe light by the photonic temperature sensor, such that the chip waveguide receives the primary probe light from the chip probe light source, receives the bolometer light from the photonic temperature sensor, and communicates the bolometer light to a photodetector; and a photon absorber disposed on the thermally-isolated member in thermal communication with the photonic temperature sensor and that receives incident radiation light, increases temperature due to absorption of the incident radiation light, heats the photonic temperature sensor in response to receipt of the incident radiation light, and changes the resonance frequency of the photonic temperature sensor in response to receiving the incident radiation light; a photodetector in optical communication with the photonic bolometer and that receives the bolometer light from the chip waveguide of the photonic bolometer and produces photodetector signal in response to receiving the bolometer light from the photonic bolometer; a phase sensitive detector in electrical communication with the photodetector and that receives the photodetector signal from the photodetector, receives a reference frequency signal, and produces a lock signal based on the photodetector signal with reference to the reference frequency signal; a local oscillator in electrical communication with the phase sensitive detector and a servo controller and that produces the reference frequency signal and communicates the reference frequency signal to the phase sensitive detector and the servo controller; the servo controller in electrical communication with the phase sensitive detector and the local oscillator and that receives the lock signal from the phase sensitive detector, receives the reference frequency signal from the local oscillator, produces control light signal in response to receiving the lock signal and the reference frequency signal, and communicates the control light signal to the chip probe light source, wherein the temperature of the thermally-isolated member is determined via a change in resonance frequency of the photonic temperature sensor.

[0005] Disclosed is a process for performing broadband high-absorption photonic bolometry with a photonic bolometer, the process comprising: receiving primary probe light

by a chip waveguide of the photonic bolometer; communicating the primary probe light from the chip waveguide to a photonic temperature sensor of the photonic bolometer; receiving incident radiation light by a photon absorber of the photonic bolometer; increasing the temperature of the photon absorber in response to receiving the incident radiation light; communicating heat from the photon absorber to the photonic temperature sensor; receiving, by the photonic temperature sensor, the heat from the photon absorber and increasing a temperature of the photonic temperature sensor in response to receiving the heat from the photon absorber; changing a resonance frequency of the photonic temperature sensor in response to increasing the temperature of the photonic temperature sensor due to absorption of the incident radiation light by the photon absorber; producing, by the photonic temperature sensor, bolometer light from the primary probe light based on the change of the resonance frequency due to heating the photonic temperature sensor; communicating the bolometer light from the photonic temperature sensor to the chip waveguide; and determining the temperature change of the photonic temperature sensor due to the absorption of the incident radiation light by the photon absorber from the bolometer light to perform broadband high-absorption photonic bolometry.

BRIEF DESCRIPTION OF THE DRAWINGS

[0006] The following description cannot be considered limiting in any way. Various objectives, features, and advantages of the disclosed subject matter can be more fully appreciated with reference to the following detailed description of the disclosed subject matter when considered in connection with the following drawings, in which like reference numerals identify like elements.

[0007] FIG. **1** shows perspective views of photonic bolometers that include an array of photonic bolmetric pixels in panels (A), (B), and (C) along with insets for a corresponding single photonic bolometric pixel, according to an embodiment.

[0008] FIG. **2** shows an SEM of a photonic bolometer, according to an embodiment.

[0009] FIG. **3** shows a perspective view of a photonic bolometer and cross-sections of the photonic bolometer, according to an embodiment.

[0010] FIG. **4** shows a perspective view of a photonic bolometer and cross-sections of the photonic bolometer, according to an embodiment.

[0011] FIG. **5** shows a perspective view of a photonic bolometer and cross-sections of the photonic bolometer, according to an embodiment.

[0012] FIG. **6** shows a perspective view of a photonic bolometer and cross-sections of the photonic bolometer, according to an embodiment.

[0013] FIG. **7** shows a perspective view of a photonic bolometer and cross-sections of the photonic bolometer, according to an embodiment.

[0014] FIG. **8** shows a perspective view of a photonic bolometer and cross-sections of the photonic bolometer, according to an embodiment.

[0015] FIG. **9** shows a perspective view of a photonic bolometer and cross-sections of the photonic bolometer, according to an embodiment.

[0016] FIG. **10** shows a perspective view of a photonic bolometer and cross-sections of the photonic bolometer, according to an embodiment.

[0017] FIG. **11** shows a perspective view of a photonic bolometer and cross-sections of the photonic bolometer, according to an embodiment.

[0018] FIG. **12** shows a perspective view of a photonic bolometer and cross-sections of the photonic bolometer, according to an embodiment.

[0019] FIG. **13** shows a perspective view of a photonic bolometer and cross-sections of the photonic bolometer, according to an embodiment.

[0020] FIG. **14** shows a perspective view of a photonic bolometer and cross-sections of the photonic bolometer, according to an embodiment.

[0021] FIG. **15** shows a perspective view of a photonic bolometer that includes an array of photonic bolometer pixels and cross-sections of the photonic bolometer, according to an embodiment.

[0022] FIG. **16** shows a perspective view of a photonic bolometer that includes an array of photonic bolometer pixels and cross-sections of the photonic bolometer, according to an embodiment.

[0023] FIG. **17** shows steps involved in making a photonic bolometer, according to an embodiment.

[0024] FIG. **18** shows a plan view of a photonic bolometer and indicates reception of incident radiation light by a photon absorber, wherein the photon absorber produces heat that flows from the photon absorber to a photonic temperature sensor, as well as communication of primary probe light and bolometer light in the photonic bolometer, according to an embodiment.

[0025] FIG. **19** shows a photonic bolometry system, according to an embodiment.

[0026] FIG. **20** shows a photonic bolometry system, according to an embodiment.

[0027] FIG. **21** shows a photonic bolometry system, according to an embodiment.

DETAILED DESCRIPTION

[0028] A detailed description of one or more embodiments is presented herein by way of exemplification and not limitation.

[0029] Conventional microbolometers use thermistors materials such as vanadium oxide or amorphous silicon to read out temperature electrically. Such materials are incompatible with high temperature processes. In a departure from conventional articles, photonic bolometer **200** described herein overcomes this technical deficiency of conventional microbolometers and senses changes in temperature of a bolometer element that absorbs incident radiation, e.g., by vertically aligned carbon nanotubes (VACNTs). It is contemplated that VACNTs withstand high temperatures and can be made at 800° C. Advantageously, VACNTs are highly photon absorbing (>99%) and extremely broadband (e.g., from 0.2 μm to 200 μm), unlike traditional microbolometer interference filters that are narrow band (typically 8-14 μm). Beneficially, photonic bolometer **200** can include a photonic temperature sensor that is compatible with 800° C. VACNT growth and provides easy integration of carbon nanotube absorbing elements in a microbolometer array for the first time. Moreover, photonic bolometer **200** provides thermal imaging beyond 20 μm, which is currently not possible. Past attempts at developing such a bolometer array have been hindered by incompatibility of conventional thermistor technology with the 800° C. growth temperature of VACNTs.

However, the photonic temperature sensor allows for integration of carbon nanotube absorbers in photonic bolometer **200**.

[0030] It has been discovered that photonic bolometer **200** measure radiation incident upon photon absorber **217** of photonic bolometer **200** over a broad frequency range, e.g., from ultraviolet wavelengths (~0.2 μm) to far infrared wavelengths (~200 μm) of the radiation. Photon absorber **217** produces heat from the incident radiation. The heat is sensed by a photonic temperature sensor (or quantum standard) that can be fabricated from silicon-on-insulator (or other photonics semiconductor materials, e.g., silicon nitride, AlN, a III-V semiconductor, and the like). Advantageously, photonic bolometer **200** can include a plurality of chip-scale, single photonic bolmetric pixels **252** that are multiplexed and arranged in a multi-pixel array, wherein in addition to sensing the incident radiation, the array can image the extent of the incident radiation over, e.g., a two-dimensional surface area.

[0031] Photonic bolometer **200** performs broadband high-absorption photonic bolometry. In an embodiment, with reference to FIG. **1**, FIG. **2**, FIG. **3**, FIG. **4**, and FIG. **5**, FIG. **6**, FIG. **7**, FIG. **8**, FIG. **9**, FIG. **10**, FIG. **11**, FIG. **12**, FIG. **13**, FIG. **14**, FIG. **15**, FIG. **16**, and FIG. **18**, photonic bolometer **200** includes: photonic chip **201**; weak thermal link **250** disposed on and in mechanical communication with photonic chip **201**; thermally-isolated member **202** disposed on weak thermal link **250** and in mechanical communication with the weak thermal link **250**, such that weak thermal link **250** is interposed between thermally-isolated member **202** and photonic chip **201**, and weak thermal link **250** thermally isolates thermally-isolated member **202** from photonic chip **201**; photonic temperature sensor **216** disposed on thermally-isolated member **202** and including a resonance frequency from which a temperature of thermally-isolated member **202** is determinable and that varies with temperature of thermally-isolated member **202**, wherein photonic temperature sensor **216** receives primary probe light **238** from chip waveguide **215** and produces bolometer light **244** from primary probe light **238**; chip waveguide **215** disposed on thermally-isolated member **202** in optical communication with photonic temperature sensor **216** and that communicates primary probe light **238** to photonic temperature sensor **216** and that monitors transmission and storage of primary probe light **238** by photonic temperature sensor **216**, wherein chip waveguide **215** receives bolometer light **244** from photonic temperature sensor **216** to determine the temperature of thermally-isolated member **202** via a change in resonance frequency of photonic temperature sensor **216**; and photon absorber **217** disposed on thermally-isolated member **202** in thermal communication with photonic temperature sensor **216** and that receives incident radiation light **236**, increases temperature due to absorption of incident radiation light **236**, heats photonic temperature sensor **216** in response to receipt of incident radiation light **236**, and changes the resonance frequency of photonic temperature sensor **216** in response to receiving incident radiation light **236**.

[0032] In an embodiment, photonic bolometer **200** includes isolation trench **203** bounded by photonic chip **201** and thermally-isolated member **202**, such that isolation trench **203** is interposed between photonic chip **201** and thermally-isolated member **202**. In an embodiment, isolation trench **203** surrounds the thermally-isolated member **202**.

[0033] In an embodiment, photonic bolometer **200** includes a reference phonic thermometer disposed on photonic chip **201** to measure a temperature of substrate **204** without measuring the temperature of thermally-isolated member **202**.

[0034] In an embodiment, weak thermal link **250** mechanically interconnects thermally-isolated member **202** and photonic chip **201**.

[0035] In an embodiment, photonic bolometer **200** includes undercut **209** arranged between substrate **204** and thermally-isolated member **202**, e.g., as shown in FIG. **16**. In an embodiment, undercut **209** spaces apart substrate **204** and thermally-isolated member **202** so that chip waveguide **215**, photonic temperature sensor **216**, and photon absorber **217** are suspended above and relative to substrate **204**, with chip waveguide **215** extending from opposing portions of oxide dielectric **205**, which are interposed between chip waveguide **215** and substrate **204**, over substrate **204**, and photon absorber **217** is disposed on photonic temperature sensor **216**.

[0036] Various arrangements of chip waveguide **215**, photonic temperature sensor **216**, and photon absorber **217** in thermally-isolated member **202** are contemplated. In an embodiment, photonic temperature sensor **216** is interposed between chip waveguide **215** and photon absorber **217**. In an embodiment, photonic temperature sensor **216** and photon absorber **217** are disposed proximate to chip waveguide **215**, and photon absorber **217** is disposed on photonic temperature sensor **216** so that photonic temperature sensor **216** is interposed between photon absorber **217** and thermally-isolated member **202**.

[0037] In an embodiment, photonic chip **201**, thermally-isolated member **202**, and weak thermal link **250** independently comprise a semiconductive material. In an embodiment, photonic temperature sensor **216** includes a semiconductive material. In an embodiment, photonic temperature sensor **216** includes a photonic crystal cavity, a ring resonator, or a disk resonator, such that the resonance frequency of photonic temperature sensor **216** is sensitive to temperature. In an embodiment, photon absorber **217** includes vertically aligned carbon nanotubes.

[0038] In an embodiment, photonic bolometer **200** includes cladded dielectric **206** disposed on photonic temperature sensor **216**, such that photonic temperature sensor **216** is interposed between cladded dielectric **206** and substrate **204**.

[0039] In an embodiment, weak thermal link **250**, thermally-isolated member **202**, photonic temperature sensor **216**, and photon absorber **217** are arranged as a single photonic bolometric pixel **252** in photonic bolometer **200**. In an embodiment, photonic bolometer **200** further includes additional photonic bolometric pixels **252** arranged in an array. In an embodiment, chip waveguide **215** extends along photonic bolometer **200** so that chip waveguide **215** is in optical communication with each photonic temperature sensor **216** in each photonic bolometric pixel **252** and: communicates primary probe light **238** to each photonic temperature sensor **216** in each photonic bolometric pixel **252**; and receives bolometer light **244** from each photonic temperature sensor **216** in each photonic bolometric pixel **252**, such that the at least a two-dimensional temperature map is obtained across photonic bolometer **200** from bolometer light **244** from each photonic temperature sensor **216** in each photonic bolometric pixel **252**. The temperature map can be

a spatial map of incident radiation light **236** that is absorbed by the plurality of photon absorbers **217** disposed in the array of photonic bolometric pixels **252**.

[0040] In an embodiment, photonic bolometer **200** can include additional layers. Such layers can include oxide dielectric **205**, dielectric membrane **207**, dielectric membrane **207** among others that can be used for electrical insulation or selective conduction, optical or thermal isolation and the like. It should be appreciated that an order of the layers and a number of repeats of any of these layers in a stacked structure can occur based on a desired application or environment of operation of photonic bolometer **200**. For example, with reference to FIG. **3**, dielectric membrane **207** can be interposed between photon absorber **217** that is disposed on photonic temperature sensor **216**. Photonic chip **201** can include substrate **204** and oxide dielectric **205** disposed on substrate **204**. The thermally-isolated member **202** has a very weak thermal link to photonic chip **201** and can include dielectric membrane **207**, etch cavity **208**, undercut **209**, or isolation trench **203**. Further, photonic temperature sensor **216** can be, e.g., a photonic crystal cavity, ring resonator, or disk resonator, such that the resonance frequency thereof is sensitive to temperature. Since photonic temperature sensor **216** is disposed on thermally-isolated member **202**, the temperature rise sensed by photonic temperature sensor **216** is determined using optical frequency metrology. In an embodiment, photonic temperature sensor **216** is coated, e.g., top-covered, with cladded dielectric **206**.

[0041] Probe light **237** is coupled to and from photonic temperature sensor **216** via chip waveguide **215** disposed proximate to photonic temperature sensor **216**. Vertically aligned carbon nanotubes (VACNTs) can be grown as photon absorber **217** over photonic temperature sensor **216**, providing for an isothermal pixel structure, wherein incident radiation light **236** is absorbed by photon absorber **217** and converted therewith to heat. VACNTs in photon absorber **217** absorb incident radiation light **236** (e.g., light) and transform it into heat, raising the temperature of thermally-isolated member **202** (but not ref a**201**) and sensed by photonic temperature sensor **216**.

[0042] In an embodiment, an additional photonic temperature sensor **216** (referred to herein as a reference photonic thermometer) and chip waveguide **215** can be disposed on photonic chip **201**, external to thermally-isolated member **202**, wherein the reference phonic thermometer measures a bulk or substrate (reference) temperature of photonic chip **201**. The temperature difference between the reference photonic temperature sensor **216** and photonic temperature sensor **216** give the temperature rise solely due to absorbed incident radiation light **236**, illumination temperature fluctuation of the surrounding environment where photonic chip **201** is located.

[0043] Substrate **204** can include a material that can be processed (e.g., micromachined, including lithography and the like) to form a support structure for photonic temperature sensor **216**. Exemplary substrates **204** include wafers or dies of silicon, sapphire, silicon carbide or III-V materials. A thickness of substrate **204** can be from 100 μm to 10 mm, specifically from 250 μm to 1 mm, and more specifically from 550 μm to 680 μm. In an embodiment, substrate **204** includes a semiconductor. An exemplary semiconductor is an element from group 11, 12, 13, 14, 15, or 16 (IUPAC nomenclature, which respectively is identical to group I, II, III, IV, V, or VI) of the periodic table such as a Si, Ga, Ge, As, In, Sn, Sb, Te, At, Hf, Zn, and the like, or a combination thereof. According to an embodiment, substrate **204** is a compound semiconductor such as SiC, SiGe, GaN; a group 13-15 (also referred to as a group III-V) semiconductor such as AlSb, AlAs, Aln, AlP, BN, GaSb, GaAs, GaN, GaP, InSb, InAs, InN, InP, and the like; a group 12-16 (group II-VI) semiconductor such as CdSe, CdS, CdTe, ZnO, ZnSe, ZnS, ZnTe, and the like; a group 11-17 (group I-VII) semiconductor such as CuCl and the like; a group 14-16 (group IV-VI) semiconductor such as PbS, PbTe SnS, and the like; a layer semiconductor such as PbI_2, MoS_2, GaSe, and the like; an oxide semiconductor such as CuO, Cu_2O, and the like; (Al,Ga)N, (Al,Ga)As, (In,Ga)As, (Al,Ga)Sb, (In,Ga)Sb, as well as nitride, arsenide, antimonide quaternary III-V alloys, or a combination comprising at least one of the foregoing. Examples of II-VI alloys include, but are not limited to CdSe, CdTe, CdS, ZnSe, and combinations thereof. Examples of Group III-V ternary alloys include, but are not limited to, (Ga,Al)As, (In,Ga)As, and combinations thereof. Exemplary Group III-V quaternary alloys include (Ga,In)(As,P), (In,Al,Ga)Sb, and the like. Exemplary Group III-nitride alloys include (Ga,Al)N, (Ga,In)N, (Al,In)N, (Ga,Al,In)N, and combinations thereof. Quaternary alloys of the above may also be employed.

[0044] Substrate **204** also can include a supplemental element such as C, H, N, Li, Na, K, Mg, Ca, Sr, Ba, Bi, B, Al, P, S, O, and the like in an amount typically less than an amount of the semiconductor. In an embodiment, common substrate **204** includes silicon, and the silicon is optionally doped. According to an embodiment, the semiconductor is an intrinsic semiconductor or an extrinsic semiconductor doped with a selected dopant, e.g., a p-dopant or an n-dopant. In one embodiment, the substrate includes a p-dopant. In another embodiment, substrate **204** includes an n-dopant. In a particular embodiment, substrate **204** is p-doped Si. In one embodiment, substrate **204** is n-doped Si. Substrate **204** can be produced from, e.g., commercially available semiconductor grade p-doped Si having a particular crystalline orientation, e.g., having Miller indices <111>, <100>, and the like. Substrate **204** can be amorphous, polycrystalline, or a single crystal. In an embodiment, substrate **204** has a stacked structure that includes a plurality of semiconductor layers such as by forming films as SiGe/Si/SiGe/Si on a Si substrate. In some embodiments, substrate **204** includes crystalline domains among amorphous material.

[0045] In an embodiment, substrate **204** includes a glass, Pyrex, sapphire, polymer, ceramic, or an electrically conductive material, e.g., a metal. Substrate **204** can be electrically conductive, semiconductive, or electrically insulating. Substrate **204** can include a plurality of layers such oxide dielectric **205** and top-cladded dielectric oxide **206** on a base layer, e.g., of silicon.

[0046] Oxide dielectric **205** can be disposed on substrate **204** to isolate the photonic temperature sensor **216** from substrate **204**. The oxide dielectric **205** can include an oxide of an element deposited on substrate **204** or independently can be an oxide of a semiconductor material such as SiO_2. In an embodiment, substrate **204** includes Si, and oxide dielectric **205** includes silicon dioxide (SiO_2). Additional oxide dielectric **205** materials include gallium oxide (GaO_3), aluminum oxide (Al_2O_3), or alloys thereof, oxides of compounds from Groups III and V or alloys thereof, and the like. Exemplary oxides in oxide dielectric **205** also include ZnO,

HfO_2, SnO_2, In_2O_3, Zn_2SnO_4, Ga_2O_3, Al_2O_3, and the like. In an embodiment, oxide dielectric **205** is produced by oxidation of a portion of substrate **204** to produce the semiconductor oxide. According to one embodiment, oxide dielectric **205** is a product of rapid thermal oxidation of substrate **204** so that the oxide (the dielectric layer) is derived from substrate **204**. In another embodiment, the oxide dielectric **205** is a product of low temperature oxidation of substrate **204** to produce an oxide. In a further embodiment, oxide dielectric **205** is a product of depositing the oxide on substrate **204**, which may or may not involve oxidation of substrate **204**. Moreover, oxide dielectric **205** can be bonded to substrate **204**. In an embodiment, oxide dielectric **205** includes SiO_2 as the oxide, which is a product of oxidation of substrate **204** that includes Si. In some embodiments, oxide dielectric **205** includes a semiconductor oxide, a ceramic (e.g., ZrO2, Al2O3, SiC, Si3N4, BN, BaTiO3, and the like), a glass, a polymer, or a combination thereof. In some embodiments, the dielectric oxide includes an organic compound such as a polymer, e.g., cellulose, poly(methyl methacrylate), and the like.

[0047] A thickness of oxide dielectric **205** can be from 0.25 μm to 10 μm, specifically from 0.5 μm to 5 μm, and more specifically from 1 μm to 3 μm.

[0048] Cladded dielectric **206** can include the same composition, properties and function as oxide dielectric **205**. Moreover, the cladded dielectric **206** can be an encapsulation layer that seals photonic temperature sensor **216** from environmental factors such as humidity and moisture, dust, chemical depositions that can change the effective refractive index of photonic temperature sensor **216**, and the like. Furthermore, cladded dielectric **206** can optically isolate photonic temperature sensor **216** from photon absorber **217** grown over cladded dielectric **206**, directly on top of photonic temperature sensor **216**. In an embodiment, cladded dielectric **206** includes a product of depositing the oxide on substrate **204**. Moreover, cladded dielectric **206** can be bonded to photonic temperature sensor **216**.

[0049] Waveguide **215** receives primary probe light **238** and bolometer light **244** in communication with photonic temperature sensor **216**. Waveguide **215** guides light along a path and can be a structure on or over a substrate which guides light along the axial direction and confines it in the transverse directions. Exemplary waveguides **215** include rib waveguides and ridge waveguides. Moreover, waveguide **215** can include coupling elements to light into and out of the waveguide **215**, such as Bragg grating couplers or inverse tapers, and the like. A size, i.e., a transverse cross-section dimension relative to a propagation path of primary probe light **238** in waveguide **215**, can be from 20 nm to 20 μm, specifically from 50 nm to 5 μm, and more specifically from 200 nm to 1 μm. A transmission loss of waveguide **215** can be from 0.1 dB/cm to 50 dB/cm, specifically from 0.5 dB/cm to 10 dB/cm, and more specifically from 1 dB/cm to 4 dB/cm at a wavelength from 500 nm to 10 μm, specifically from 750 nm to 4 μm, and more specifically from 1 μm to 2.5 mm. In an embodiment, waveguide **215** guides light along a path; can have dimensions from 300 nm to 1 μm width, 200 nm to 500 nm height; can include silicon and similar materials; and can operate at a wavelength from 1 μm to 2.5 μm

[0050] Photonic temperature sensor **216** can be formed according to methods described in US patent 220/0103594A1, which is incorporated by reference herein in its entirety.

[0051] The thermally isolated area **202** has a very weak thermal link to photonic chip **201** by weak thermal link **250** and can include thin suspended membrane **207** that is thermally isolated from the bulk of chip **201** and supported by tethers or legs that act as weak thermal links **250** to the bulk of chip **201**. Moreover, the thermally isolated area **202** can be a portion/surface area on a chip that is surrounded by isolation trenches **203**. These isolation trenches **203** are a weak thermal link to chip **201**. The thermal isolation area **202** supports both a photonic thermometer **216**, VACNTs **217**, and a portion of the waveguide **215**. Furthermore, thermally isolation area **202** can include etch cavity **208**, wherein etch cavity **208** is etched in substrate **204**. Furthermore, thermally-isolated member **202** can include undercut **209** so that photonic temperature sensor **216**, wherein photonic temperature sensor **216** is suspended over undercut **209**.

[0052] VACNTs in photon absorber **217** absorb incident radiation light **236** that can be, e.g., from ultraviolet (~0.2 μm) to long-range infrared (~200 μm) and transform it into heat that is sensed by photonic temperature sensor **216** fabricated from silicon-on-insulator (or other photonics semiconductor materials, e.g. silicon nitride, AlN, III-V, and the like), and is thermally disconnected from the photonic chip **201** by suspending it with legs or on cladded dielectric **206**.

[0053] Isolation trench **209** can be a gap between thermally-isolated member **202** and photonic chip **201** that is empty (e.g., an air gap) or filled with a thermally insulating material so that thermally-isolated member **202** is thermally isolated from photonic chip **201**. Accordingly, when thermally-isolated member **202** is heated due to electrical current causing Joule heating of photon absorber **217**, even though thermally-isolated member **202** is heated, photonic chip **201** maintains its temperature without a temperature increase or having an insignificant increase in temperature.

[0054] In an aspect, photonic temperature sensor **216** has an optical resonance frequency that is sensitive to temperature. The temperature rise sensed by photonic temperature sensor **216** is determined using frequency metrology. The photonic temperature sensor **216** can be encapsulated, shielding it from the environment effects such as humidity. Moreover, photonic temperature sensor **216** can be fabricated from silicon, silicon nitride (silicon- or silicon nitride-on-insulator platform), AlN, TiO_2, GaAs, or other semiconductive materials.

[0055] Photonic bolometer **200** can be made of various elements and components that are microfabricated, microfabricated or nanofabricated. Elements of photonic bolometer **200** can be various sizes and can be made of a material that is physically or chemically resilient in an environment in which photonic bolometer **200** is disposed. Exemplary materials include a metal, ceramic, thermoplastic, glass, semiconductor, and the like. Some of the elements of photonic bolometer **200** can be made of the same or different material and can be monolithic in a single physical body or can be separate members that are physically joined.

[0056] Photonic bolometer **200** can be made in various ways. It should be appreciated that photonic bolometer **200** includes a number of optical, electrical, or mechanical

components, wherein such components can be interconnected and placed in communication (e.g., optical communication, electrical communication, mechanical communication, and the like) by physical, chemical, optical, or free-space interconnects. The components can be disposed on mounts that can be disposed on a bulkhead for alignment or physical compartmentalization. As a result, photonic bolometer **200** can be disposed in a terrestrial environment or space environment. Elements of photonic bolometer **200** can be formed from silicon, silicon nitride, and the like although other suitable materials, such ceramic, glass, or metal can be used. According to an embodiment, the elements of photonic bolometer **200** are formed using 3D printing although the elements of photonic bolometer **200** can be formed using other methods, such as injection molding or machining a stock material such as block of material that is subjected to removal of material such as by cutting, laser oblation, chemical vapor deposition, etching, and the like. Accordingly, photonic bolometer **200** can be made by additive or subtractive manufacturing. In an embodiment, elements of photonic bolometer **200** are selectively etched to remove various different materials using different etchants and photolithographic masks and procedures. The various layers thus formed can be subjected to joining by bonding to form photonic bolometer **200**.

[0057] Bolometer light **244** Produced by photonic temperature sensor **216** can be communicated to photonic bolometry system **251** for determine of the temperature increase of photon absorber **217** caused by incident radiation light **236** as well as properties of incident radiation light **236**. In an embodiment, with reference to FIG. **19**, FIG. **20**, and FIG. **21**, photonic bolometer **200** performs performing broadband high-absorption photonic bolometry and can include various optical and electrical features to determine temperature, optical resonance shifts, and the like. Here, incident radiation light **236** is received by photonic bolometer **200**; probe light source **218** receives control light signal **248** and produces, based on control light signal **248**, primary probe light **238** that includes primary wavelength **239** and primary power **243**. Photonic bolometer **200** is in communication with probe light source **218** and includes chip waveguide **215**, photonic temperature sensor **216**, and photon absorber **217**. Waveguide **215** is in communication with photonic temperature sensor **216** and receives primary probe light **238**; photonic temperature sensor **216** in communication with waveguide **215** and: interacts with primary probe light **238** from waveguide **215**, and stores primary probe light **238** when primary wavelength **239** matches resonance frequency **240** of photonic temperature sensor **216**, such that an amount of primary probe light **238** stored in photonic temperature sensor **216** includes absorption power **242**. Waveguide **215** receives primary probe light **238** after primary probe light **238** has interacted with photonic temperature sensor **216**. Bolometer light **244** includes transmission power **241** that is indirectly proportional to absorption power **242** of primary probe light **238** stored in photonic temperature sensor **216**. Photodector **225** is in communication with photonic bolometer **200** and receives bolometer light **244** from photonic bolometer **200**; and produces photodetector signal **245** from bolometer light **244**. Phase sensitive detector **229** is in communication with photodetector **225** and receives photodetector signal **245** from photodetector **225**; receives reference frequency signal **246**; and produces lock signal **247** from photodetector signal **245**, based on reference frequency signal **246**. Local oscillator **228** is in communication with phase sensitive detector **229** and produces reference frequency signal **246**. Servo controller **230** is in communication with phase sensitive detector **229** and local oscillator **228** and receives lock signal **247** from phase sensitive detector **229**; receives reference frequency signal **246** from local oscillator **228**; and produces control light signal **248** from lock signal **247** and reference frequency signal **246** such that absorption power **242** is maximized through wavelength control of probe light source **218** by control light signal **248**.

[0058] In photonic bolometry system **251**, transducer **231** can be electrically interposed between and in communication with light source **218** and servo controller **230**. Transducer **231** receives control light signal **248** from servo controller **230**; produces transduction control signal **249** based on control light signal **248**; and communicates transduction control signal **249** to probe light source **218** to control production of primary wavelength **239** by light source **218**. Wavelength meter **220** is in communication with light source **218** and receives primary probe light **238** from probe light source **218** and determines a wavelength of primary wavelength **239**. Optical isolator **221**, optical attenuator **222**, polarization controller **223**, or a combination of at least one of the foregoing optical elements is in communication with probe light source **218** and receives primary probe light **238** and varies a property of primary probe light **238**. The property of primary probe light **238** that is varied can include a broadband light or a coherent light with a narrow linewidth to provide primary probe light **238** to photonic bolometer **200**. Optical power meter **224** is in communication with photonic bolometer **200** and receives bolometer light **244** from photonic bolometer **200** and determines transmission power **241**.

[0059] In photonic bolometry system **251**, bolometer light **244** can be controlled by control light signal **248**. It is contemplated that transducer **231** can change the frequency of the probe light source **218** and can include piezo actuator that changes the cavity length. Exemplary transducers **231** include a piezo actuation element, current transducer, Peltier heater and or cooler. In an embodiment, transducer **231** includes piezo actuator that changes the cavity length.

[0060] Probe light source **218** produces primary probe light **238**. Primary probe light **238** can include light a broadband source or a coherent light source with a narrow linewidth to provide primary probe light **238** to photonic bolometer **200**, and can be a light emitted diode, and arc lamp, an infrared laser, a visible laser, and ultraviolet laser, and the like. Exemplary primary probe lights **608** can be tunable diode lasers. Moreover, in the embodiment, primary probe light **238** is emitted form a C-band tunable laser. A wavelength of primary probe light **238** can be from 200 nm to 10 μm, specifically from 400 nm to 3 μm, and more specifically from 500 nm to 2 A power of primary probe light **238** can be from of primary probe light **238** can be from 10 nW to 100 mW, specifically from 50 nW to 50 mW, and more specifically from 100 nW to 10 mW. In an embodiment, primary probe light **238** includes light from C-band tunable laser in a wavelength from 1520 nm to 1570 nm and a laser power from 0.1 mW to 20 mW.

[0061] Primary probe light **238** is converted to bolometer light **244** in photonic bolometer **200**. Bolometer light **244** can include light transmitted along waveguide **215** with a reduced transmission at the resonant frequency of the pho-

tonic bolometer **200**. A wavelength of bolometer light **244** can be from 200 nm to 10 μm, specifically from 400 nm to 3 μm, and more specifically from 500 nm to 2 μm. A power of bolometer light **244** can be from 10 nW to 100 mW, specifically from 50 nW to 50 mW, and more specifically from 100 nW to 10 mW. In an embodiment, bolometer light **244** includes light from C-band tunable laser in a wavelength range from 1520 nm to 1570 nm and laser power from 0.1 mW to 20 mW which passed through the photonic bolometer **200**.

[0062] Optical beam splitter **219** can split or combine light. Exemplary beam splitters **219** include a waveguide-based splitter that couples incoming light flux propagating through an incoming waveguide to two or more waveguides. Moreover, beam splitter **219** is optionally used to provide a portion of the light to a wavelength meter **220**, an optical power meter **224**, and or photodetector **225**, and the like. Moreover, beam splitter **219** is optionally used to provide a portion of the light to an optical power meter **224**, and or a wavelength meter **220**, and the like. In an embodiment, beam splitter **219** provides 10% of primary probe light **238** to wavelength meter **220**, and 90% of light incident from light source is directed to photonic bolometer **200**. Moreover, in an embodiment, beam splitter **219** provides 50% of bolometer light **244** to an optical power meter **224**, and 50% of bolometer light **244** to photodetector **225**.

[0063] Optical circulator **235** is three- or four-port non-reciprocal optical device designed that light entering any port exits from the next port. Optical circulator **235** allows light to travel in only one direction. In embodiment, optical circulator **235** is fiber optics circulator, which is non-reciprocal optics device, in which the properties of light passing through the device are not revered when light changes direction from forward to backward. Exemplary optical circulator **235** can separate propagating forward in fiber optics light and reflected backward in fiber optics light. Exemplary optical circulator is based on Faraday rotator. In embodiment optical circulator **235** is single mode fiber or polarization maintaining fiber optics device.

[0064] Wavelength meter **220** an element that determines wavelength of light incident of it. Exemplary wavelength monitors **220** diffraction grating, spectrometer, spectrum analyzer, an etalon, wavelength sell, and frequency combs, and the like. Moreover, the wavelength meter **220** produces a wavelength signal that can include a voltage of other electric or photonic signal whose characteristics are determined by the measured wavelength and a specified calibration. Exemplary wavelength signals include DC voltages, the frequency of AC voltages, DC electric currents, microwave signals, and spectra dispersed by a diffraction grating. Moreover, the wavelength meter **220** can determine the frequency of light incident on it. In an embodiment, wavelength meter **220** produces analog DC voltage signal, and the wavelength value displayed on a computer.

[0065] Optical isolator **221** can include a magneto-optic device that only allows light to travel in forward direction, and prevent the transmission of light in backward direction. Exemplary optical isolators **221** are Faraday effect isolators. Moreover, optical isolator can operate in infrared, visible, and or UV frequency range. In an embodiment, optical isolator **221** includes fiber-optic, fiber coupled with single-mode and or polarization maintaining single-mode fiber, and optical isolation between 10 dB and 100 dB, specifically between 20 dB and 80 dB, more specifically between 30 dB and 60 dB.

[0066] Optical attenuator **222** can include a free space, and or fiber-optic device, that produce attenuation of optical power of incident light. Exemplary optical attenuators **222** include single mode, multimode, polarization-maintaining optical attenuator. Moreover, optical attenuator **222** can operate in infrared, visible, and UV frequency range. Furthermore, optical attenuator **222** can be of fixed attenuation, and of variable attenuation. In an embodiment, optical attenuator **304** includes fiber-optic variable or fixed attenuator with attenuation range between 1 dB and 100 dB, specifically between 2 dB and 80 dB, more specifically between 3 dB and 60 dB.

[0067] Polarization controller **223** can include a free-space or fiber-optic device that manipulates the polarization of light. Exemplary polarization controllers **223** include birefringent crystals and calcite polarizers. Moreover, polarization controller **223** utilizes fiber-optic stress-induced birefringence device that can convert between linear, circular, and elliptical polarization of light. In an embodiment, polarization controller **223** can include fiber-optic device that utilizes stress-induced birefringence to create two or three independent fractional wave plates to alter the polarization in single mode fiber. Moreover, in an embodiment, polarization controller **223** can include in-line polarization controller that can transform an arbitrary input polarization of light to arbitrary output polarization of light using a sing a quarter-wave, half-wave, and another quarter-wave plate.

[0068] Optical power meter **224** can include an element to absorb incident light and another element to quantify the effect of this absorption, which is proportional to the amount of the light absorbed. Exemplary optical power meter **224** includes photodiodes and bolometers. Moreover, a device with a response that is proportional to the power of light incident upon it may be incorporated into a power meter. Output signal from optical power meter **224** produces power signal that can include DC voltages and DC currents. In an embodiment, an optical power meter **224** includes a germanium-based photodiode, when a light is absorbed in the photodiode, an electron-hole pair is formed within the device, and a voltage is developed across the photodiode junction, measuring a photocurrent between photodiode terminals provides a measure of the optical power incident upon a detector.

[0069] Photodector **225** can include an element to receives incident light from which it produces frequency signal, photodetector signal **245**. Exemplary photodetectors **225** includes InGaAs and Si photodiodes. In an embodiment, photodetector **225** is an element that produces a measurable voltage or current that can be quantified, in response to incident light. Thermometer light **420** is converted to photodetector signal **245** by photodetector **225**. Photodetector signal **245** can include a measurable voltage or current signal that is proportional to incident light. Moreover, a photodetector signal **245** can include a voltage or other electric signals. In embodiment, photodetector signal **245** can be produced by a germanium-based photodiode, when a light is absorbed in the photodiode, an electron-hole pair is formed within the device, and a voltage is developed across the photodiode junction, measuring a photocurrent between photodiode terminals provides a measure of the optical power incident upon a detector. Exemplary photodetectors

include power meter, photodiodes, and photoreceivers. Examples of photodetector **225** include InGaAs and or Si photodiode. The bandwidth of the photodetector **225** can be between 0 Hz and 10 GHz, specifically between 100 Hz and 5 GHz, and more specifically between 1 kHz and 1 GHz.

[0070] Voltage amplifier **226** can include electronic current or voltage amplifier that amplifies signal from a photodetector **225** by a factor in the range from 2 to a factor to 10000. Exemplary amplifiers **226** include differential amplifier and transimpedance amplifier.

[0071] Filter **227** can include a low pass electrical filter that cuts off high-frequency component of the electrical signal. Filter **227** can be used with phase sensitive detector **229**. In an embodiment, filter **227** includes a low pass with high-frequency cutoff in the range from 1 kHz to 10 MHz, specifically from 2 kHz and 1 MHz, and more specifically between 10 kHz and 100 kHz.

[0072] Phase sensitive detector **229** can include mixer, low pass filter, local oscillator **228** and voltage amplifier **226**. Exemplary phase sensitive detector **229** includes lock-in amplifier. Moreover, lock-in amplifier can discriminate signal in noisy environment. In an embodiment, phase sensitive detector **229** includes mixer, low pass filter, local oscillator, and amplifier. These components can be packaged together in the form of lock-in amplifier that is used to detect small changes in the phase of the laser light. Photodetector signal **245** is converted to lock signal **247** by photodetector **225**. Lock signal **466** can include an electronic signal. An electronic signal of lock signal **426** can be from 1 nV to 100 V, specifically from 1 uV to 20 V, and more specifically from 1 mV to 10 V.

[0073] Local oscillator **228** can include microwave source, and or radio frequency source that produces a known frequency in the microwave and or radio frequency range. Exemplary local oscillator **228** includes a signal generator. Moreover, the frequency produced is coherent, and located in the band from 1 Hz to 10 GHz, specifically from 10 Hz to 1 GHz, and more specifically from 100 Hz to 100 MHz. In an embodiment, local oscillator **228** includes a signal generator with a phase control and operating radio frequency range. Local oscillator **228** produces oscillating electric signal reference frequency signal **246**. Reference frequency signal **246** can include a signal from a signal generator or from a lock-in amplifier. Moreover, reference signal **624** can be a signal in the range from 10 Hz to 10 HGz. A reference frequency signal **246** can be from 1 Hz to 10 GHz, specifically from 10 Hz to 1 GHz, and more specifically from 100 Hz to 100 MHz. Reference frequency signal **246** can be used to control electro-optic phase modulator **318**. The reference frequency signal **246** is within the range of operation of electro-optic phase modulator **318**.

[0074] Servo controller **230** can include an electronic instrument that can be used for feedback control applications. In embodiment, servo controller **230** is used for adjusting the frequency of the probe light source **218** (laser). Exemplary servo controllers **230** include instrument that feeds the error signal back to the transducer **231** that modulate the probe light source **218**. In an embodiment, servo controller **230** includes three stages differential amplifier stage that generates an error signal, PID filter stage that filter error signal to generate feedback signal, and output stage that provides the control light signal **248**. Moreover, in embodiment, PID filter stage adjust the control light signal **248** to use keep an error signal at zero. In embodiment, servo controller **230** produces control light signal **248**. Control light signal **248** can include dither error signal, Pound-Drever-Hall error signal, and the like. Moreover, the bandwidth of the servo controller **230** can be from 100 Hz to 1 GHz, specifically from 1 kHz to 500 MHz, and more specifically from 10 kHz to 100 MHz. The control light signal **248** can be from −20 V to +V, specifically from −15 V to +15 V, and more specifically from −10 V to +10V.

[0075] Electro-optic phase modulator **232** is a fiber-coupled or a free space device, whose refractive index changes with applied voltage with a fast response time on the order of a nanosecond. The result of voltage modulation on **232** leads to frequency modulation of probe light source **218**. Exemplary electro-optic phase modulators **232** include fiber-based electrooptic crystal driven to phase modulate light travelling though the fiber. Moreover, elector-optic phase modulator **232** can include lithium-niobate crystal. In an embodiment, electro-optic phase modulator **232** includes electro-optic crystal that modulate phase of light. Phase modulation depth generated by electro-optic phase modulator **5232 18** can be from 0.001 to 0.1, specifically from 0.005 to 0.1, and more specifically from 0.01 to 0.1.

[0076] Mixer **234** can include a non-linear device for generating an error signal, that goes into the servo controller **230** to generate a control signal to adjust the frequency of probe light source **218**.

[0077] A process for making photonic bolometer **200** can include various steps to form features thereof such as vertically aligned carbon nanotubes and photonic temperature sensor **216** in an array disposed in photonic bolometric pixel **252**. Various fabrication methods can be used, including fabrication from silicon, silicon nitride ("silicon-" or "silicon nitride-on-insulator" platform), AlN, TiO, GaAs, and other semiconductor or dielectric materials. In an embodiment, a process for making photonic bolometer **200** includes growing single pixel bolometric detectors with carbon nanotubes over or adjacent to photonic temperature sensor **216** so that photonic bolometer **200** can determine responsivity to incident radiation **236**. In an embodiment, with reference to FIG. **17**, a process for making photonic bolometer includes: providing substrate **204** (e.g., a silicon-on-insulator, silicon nitride-on-insulator, lithium-niobate-on-insulator, and the like) that includes silicon; forming oxide dielectric **205** on substrate **204** by thermal growth, chemical vapor deposition or plasma-enhanced chemical vapor deposition; forming device layer **212** (e.g., silicon, silicon nitride, aluminum nitride, lithium niobate and the like) on the oxide dielectric **205** by smart cut, wafer bonding, thin film deposition, epitaxial growth, as shown on panel A of FIG. **17**. Forming soft (resist) or hard (dielectric or metal) layer **210** on device layer **212** by spin-coating on device layer **212** as shown in panel B of FIG. **17**. As shown in panel C of FIG. **17**, resist mask **213** is made from layer **210** by lithography (e.g., photolithography, electron beam lithography, nanoimprint lithography). As shown in panel D of FIG. **17**, a portion of device layer **212** that is unprotected by resist mask **213** is etched, and a selected portion of device layer **212**, that is protected by resist mask **213**, forms waveguides **215** and photonic temperature sensor **216**. As shown in panel E of FIG. **17**, resist mask **213** is dissolved in a solvent, or selectively etch away in plasma, to expose waveguides **215** and photonic temperature sensor **216**. As shown in panel F of FIG. **17**, a cladded dielectric **206** is formed by depositing an insulating layer such as silicon dioxide on top of wave-

guides **215** and photonic temperature sensor **216** by chemical vapor deposition or plasma-enhanced chemical vapor deposition, atomic layer deposition. As shown in paned G of FIG. **17** a bottom resist layer is deposited on the substrate **204** by spin-coating. As shown in panel H of FIG. **17**, resist mask **214** is made from layer **211** by lithography (e.g., photolithography, electron beam lithography, nanoimprint lithography). As shown in panel I of FIG. **17**, a portion of substrate **204** that is unprotected by resist mask **214** is etched, and a selected portion of substrate **204**, that is protected by resist mask **214**, forms etched cavity **208** or membrane **207**. As shown on panel J of FIG. **17** after forming etch cavity **208** or membrane **207**, the bottom etch mask **214** is dissolved in solvent. Also, a top resist layer **210** is spin-coated on top of cladded dielectric **206**. As shown on panel K of FIG. **17** the etch mask **115** for isolation trench **203** is made from layer **210** by lithography (e.g., photolithography, electron beam lithography, nanoimprint lithography). As shown on panel L of FIG. **17** areas of cladded dielectric **206** that are not protected by etch mask **115** are etched to form isolation trench **203**. Following the formation of isolation trench **203**, resist mask **115** is dissolved in solvents or selectively etched away in plasma (as shown on panel M of FIG. **17**). As shown in panel N of FIG. **17** VACNTS are grown over thermally-isolated member **202** to form photon absorber **217**.

[0078] Single-pixel photonic bolometers can be made into photonic bolometer arrays by multiplexing a single pixel bolometer into a plurality of bolometers, coupled to the common waveguide **215**.

[0079] Photonic bolometer **200** has numerous advantageous and unexpected benefits and uses. In an embodiment, a process for performing broadband high-absorption photonic bolometry with photonic bolometer **200** includes: receiving primary probe light **238** by a chip waveguide **215** of the photonic bolometer **200**; communicating the primary probe light **238** from the chip waveguide **215** to a photonic temperature sensor **216** of the photonic bolometer **200**; receiving incident radiation light **236** by a photon absorber **217** of the photonic bolometer **200**; increasing the temperature of the photon absorber **217** in response to receiving the incident radiation light **236**; communicating heat from the photon absorber **217** to the photonic temperature sensor **216**; receiving, by the photonic temperature sensor **216**, the heat from the photon absorber **217** and increasing a temperature of the photonic temperature sensor **216** in response to receiving the heat from the photon absorber **217**; changing a resonance frequency of the photonic temperature sensor **216** in response to increasing the temperature of the photonic temperature sensor **216** due to absorption of the incident radiation light **236** by the photon absorber **217**; producing, by the photonic temperature sensor **216**, bolometer light **244** from the primary probe light **238** based on the change of the resonance frequency due to heating the photonic temperature sensor **216**; communicating the bolometer light **244** from the photonic temperature sensor **216** to the chip waveguide **215**; and determining the temperature change of the photonic temperature sensor **216** due to the absorption of the incident radiation light **236** by the photon absorber **217** from the bolometer light **244** to perform broadband high-absorption photonic bolometry.

[0080] Advantageously, photonic bolometer **200** uses silicon photonics and carbon nanotubes with a silicon waveguide that are compatible with carbon nanotube growth and processing. It is contemplated that the bolometer can include unsuspended high-Q optical resonators with or without carbon nanotubes to measure differential response, a suspended (or supported by a thermally isolation area/membrane) high-Q optical resonator, or a linear array of elements for multiplexed read out.

[0081] Integrated silicon waveguides and associated silicon photonic devices such as photonic crystal cavities, ring resonators, and the like can include carbon nanotubes. A high temperature growth process (800° C.), thin film catalyst (Fe, Ni, Co or other transition metal), and support catalyst (aluminum oxide, aluminum nitride, or other metal oxide/nitride) do not degrade waveguide performance as indicated by transmission measurement of power through a selectively patterned region with grown carbon nanotubes is not noticeably attenuated. A scanning electron microscope image is shown for VACNTs grown on top of photonic thermometer in FIG. **2**.

[0082] While one or more embodiments have been shown and described, modifications and substitutions may be made thereto without departing from the spirit and scope of the invention. Accordingly, it is to be understood that the present invention has been described by way of illustrations and not limitation. Embodiments herein can be used independently or can be combined.

[0083] All ranges disclosed herein are inclusive of the endpoints, and the endpoints are independently combinable with each other. The ranges are continuous and thus contain every value and subset thereof in the range. Unless otherwise stated or contextually inapplicable, all percentages, when expressing a quantity, are weight percentages. The suffix (s) as used herein is intended to include both the singular and the plural of the term that it modifies, thereby including at least one of that term (e.g., the colorant(s) includes at least one colorants). Option, optional, or optionally means that the subsequently described event or circumstance can or cannot occur, and that the description includes instances where the event occurs and instances where it does not. As used herein, combination is inclusive of blends, mixtures, alloys, reaction products, collection of elements, and the like.

[0084] As used herein, a combination thereof refers to a combination comprising at least one of the named constituents, components, compounds, or elements, optionally together with one or more of the same class of constituents, components, compounds, or elements.

[0085] All references are incorporated herein by reference.

[0086] The use of the terms "a," "an," and "the" and similar referents in the context of describing the invention (especially in the context of the following claims) are to be construed to cover both the singular and the plural, unless otherwise indicated herein or clearly contradicted by context. It can further be noted that the terms first, second, primary, secondary, and the like herein do not denote any order, quantity, or importance, but rather are used to distinguish one element from another. It will also be understood that, although the terms first, second, etc. are, in some instances, used herein to describe various elements, these elements should not be limited by these terms. For example, a first current could be termed a second current, and, similarly, a second current could be termed a first current, without departing from the scope of the various described

embodiments. The first current and the second current are both currents, but they are not the same condition unless explicitly stated as such.

[0087] The modifier about used in connection with a quantity is inclusive of the stated value and has the meaning dictated by the context (e.g., it includes the degree of error associated with measurement of the particular quantity). The conjunction or is used to link objects of a list or alternatives and is not disjunctive; rather the elements can be used separately or can be combined together under appropriate circumstances.

What is claimed is:

1. A photonic bolometer for performing broadband high-absorption photonic bolometry, the photonic bolometer comprising:

a photonic chip;

a weak thermal link disposed on and in mechanical communication with the photonic chip;

a thermally-isolated member disposed on the weak thermal link and in mechanical communication with the weak thermal link, such that the weak thermal link is interposed between the thermally-isolated member and the photonic chip, and the weak thermal link thermally isolates the thermally-isolated member from the photonic chip;

a photonic temperature sensor disposed on the thermally-isolated member and comprising a resonance frequency from which a temperature of the thermally-isolated member is determinable and that varies with temperature of the thermally-isolated member, wherein the photonic temperature sensor receives primary probe light from a chip waveguide and produces a bolometer light from the primary probe light;

the chip waveguide disposed on the thermally-isolated member in optical communication with the photonic temperature sensor and that communicates the primary probe light to the photonic temperature sensor and that monitors transmission and storage of the primary probe light by the photonic temperature sensor, wherein the chip waveguide receives the bolometer light from the photonic temperature sensor to determine the temperature of the thermally-isolated member via a change in resonance frequency of the photonic temperature sensor; and

a photon absorber disposed on the thermally-isolated member in thermal communication with the photonic temperature sensor and that receives incident radiation light, increases temperature due to absorption of the incident radiation light, heats the photonic temperature sensor in response to receipt of the incident radiation light, and changes the resonance frequency of the photonic temperature sensor in response to receiving the incident radiation light.

2. The photonic bolometer of claim **1**, further comprising an isolation trench bounded by the photonic chip and the thermally-isolated member, such that the isolation trench is interposed between the photonic chip and the thermally-isolated member.

3. The photonic bolometer of claim **2**, wherein the isolation trench surrounds the thermally-isolated member.

4. The photonic bolometer of claim **1**, further comprising a reference phonic thermometer disposed on the photonic chip to measures a temperature of the substrate.

5. The photonic bolometer of claim **1**, wherein the weak thermal link mechanically interconnects the thermally-isolated member and the photonic chip.

6. The photonic bolometer of claim **1**, further comprising an undercut arranged between the substrate and the thermally-isolated member

7. The photonic bolometer of claim **6**, wherein the undercut spaces apart the substrate and the thermally-isolated member so that the chip waveguide, the photonic temperature sensor, and the photon absorber are suspended above and relative to the substrate, with the chip waveguide extending from opposing portions of an oxide dielectric, which are interposed between the chip waveguide and the substrate, over the substrate, and the photon absorber is disposed on the photonic temperature sensor.

8. The photonic bolometer of claim **1**, wherein the photonic temperature sensor is interposed between the chip waveguide and the photon absorber.

9. The photonic bolometer of claim **1**, wherein the photonic temperature sensor and the photon absorber are disposed proximate to the chip waveguide, and the photon absorber is disposed on the photonic temperature sensor so that the photonic temperature sensor is interposed between the photon absorber and the thermally-isolated member.

10. The photonic bolometer of claim **1**, wherein the photonic chip, the thermally-isolated member, and the weak thermal link independently comprise a semiconductive material.

11. The photonic bolometer of claim **1**, wherein the photonic temperature sensor comprises a photonic crystal cavity, a ring resonator, or a disk resonator, such that the resonance frequency of the photonic temperature sensor is sensitive to temperature.

12. The photonic bolometer of claim **1**, further comprising a cladded dielectric disposed on the photonic temperature sensor, such that the photonic temperature sensor is interposed between the cladded dielectric and the substrate.

13. The photonic bolometer of claim **1**, wherein the photonic temperature sensor comprises a semiconductive material.

14. The photonic bolometer of claim **1**, wherein the photon absorber comprises vertically aligned carbon nanotubes.

15. The photonic bolometer of claim **1**, wherein the weak thermal link, the thermally-isolated member, the photonic temperature sensor, and the photon absorber are arranged as a single photonic bolometric pixel in the photonic bolometer.

16. The photonic bolometer of claim **15**, further comprising additional photonic bolometric pixels arranged in an array.

17. The photonic bolometer of claim **16**, wherein the chip waveguide extends along the photonic bolometer so that the chip waveguide is in optical communication with each photonic temperature sensor in each photonic bolometric pixel and:

communicates primary probe light to each photonic temperature sensor in each photonic bolometric pixel; and

receives bolometer light from each photonic temperature sensor in each photonic bolometric pixel,

such that the at least a two-dimensional temperature map is obtained across the photonic bolometer from the bolometer light from each photonic temperature sensor in each photonic bolometric pixel.

18. A photonic bolometry system, comprising:

a probe light source that receives a control light signal and produces a primary probe light based on the control light signal;

a photonic bolometer in optical communication with the probe light source and that receives the primary probe light from the probe light source, receives incident radiation light, and produces ref a**244** from the ref a**206** in response to receiving the incident radiation light, the photonic bolometer comprising:

a photonic chip;

a weak thermal link disposed on and in mechanical communication with the photonic chip;

a thermally-isolated member disposed on the weak thermal link and in mechanical communication with the weak thermal link, such that the weak thermal link is interposed between the thermally-isolated member and the photonic chip, and the weak thermal link thermally isolates the thermally-isolated member from the photonic chip;

a photonic temperature sensor disposed on the thermally-isolated member and comprising a resonance frequency from which a temperature of the thermally-isolated member is determinable and that varies with temperature of the thermally-isolated member, wherein the photonic temperature sensor receives primary probe light from a chip waveguide and produces a bolometer light from the primary probe light;

the chip waveguide disposed on the thermally-isolated member in optical communication with the photonic temperature sensor and that communicates the primary probe light to the photonic temperature sensor and that monitors transmission and storage of the primary probe light by the photonic temperature sensor, such that the chip waveguide receives the primary probe light from the probe light source, receives the bolometer light from the photonic temperature sensor, and communicates the bolometer light to a photodetector; and

a photon absorber disposed on the thermally-isolated member in thermal communication with the photonic temperature sensor and that receives incident radiation light, increases temperature due to absorption of the incident radiation light, heats the photonic temperature sensor in response to receipt of the incident radiation light, and changes the resonance frequency of the photonic temperature sensor in response to receiving the incident radiation light;

a photodetector in optical communication with the photonic bolometer and that receives the bolometer light from the chip waveguide of the photonic bolometer and produces photodetector signal in response to receiving the bolometer light from the photonic bolometer;

a phase sensitive detector in electrical communication with the photodetector and that receives the photodetector signal from the photodetector, receives a reference frequency signal, and produces a lock signal based on the photodetector signal with reference to the reference frequency signal;

a local oscillator in electrical communication with the phase sensitive detector and a servo controller and that produces the reference frequency signal and communicates the reference frequency signal to the phase sensitive detector and the servo controller;

the servo controller in electrical communication with the phase sensitive detector and the local oscillator and that receives the lock signal from the phase sensitive detector, receives the reference frequency signal from the local oscillator, produces control light signal in response to receiving the lock signal and the reference frequency signal, and communicates the control light signal to the probe light source,

wherein the temperature of the thermally-isolated member is determined via a change in resonance frequency of the photonic temperature sensor.

19. A process for performing broadband high-absorption photonic bolometry with a photonic bolometer, the process comprising:

receiving primary probe light by a chip waveguide of the photonic bolometer;

communicating the primary probe light from the chip waveguide to a photonic temperature sensor of the photonic bolometer;

receiving incident radiation light by a photon absorber of the photonic bolometer;

increasing the temperature of the photon absorber in response to receiving the incident radiation light;

communicating heat from the photon absorber to the photonic temperature sensor;

receiving, by the photonic temperature sensor, the heat from the photon absorber and increasing a temperature of the photonic temperature sensor in response to receiving the heat from the photon absorber;

changing a resonance frequency of the photonic temperature sensor in response to increasing the temperature of the photonic temperature sensor due to absorption of the incident radiation light by the photon absorber;

producing, by the photonic temperature sensor, bolometer light from the primary probe light based on the change of the resonance frequency due to heating the photonic temperature sensor;

communicating the bolometer light from the photonic temperature sensor to the chip waveguide; and

determining the temperature change of the photonic temperature sensor due to the absorption of the incident radiation light by the photon absorber from the bolometer light to perform broadband high-absorption photonic bolometry.

20. The process for of claim **19**, wherein the photonic bolometer comprises:

a photonic chip;

a weak thermal link disposed on and in mechanical communication with the photonic chip;

a thermally-isolated member disposed on the weak thermal link and in mechanical communication with the weak thermal link, such that the weak thermal link is interposed between the thermally-isolated member and the photonic chip, and the weak thermal link thermally isolates the thermally-isolated member from the photonic chip;

the photonic temperature sensor disposed on the thermally-isolated member and comprising a resonance frequency from which a temperature of the thermally-isolated member is determinable and that varies with temperature of the thermally-isolated member, wherein the photonic temperature sensor receives primary probe

light from a chip waveguide and produces a bolometer light from the primary probe light;

the chip waveguide disposed on the thermally-isolated member in optical communication with the photonic temperature sensor and that communicates the primary probe light to the photonic temperature sensor and that monitors transmission and storage of the primary probe light by the photonic temperature sensor, wherein the chip waveguide receives the bolometer light from the photonic temperature sensor to determine the temperature of the thermally-isolated member via a change in resonance frequency of the photonic temperature sensor; and

the photon absorber disposed on the thermally-isolated member in thermal communication with the photonic temperature sensor and that receives incident radiation light, increases temperature due to absorption of the incident radiation light, heats the photonic temperature sensor in response to receipt of the incident radiation light, and changes the resonance frequency of the photonic temperature sensor in response to receiving the incident radiation light.

* * * * *