ISO TC184/SC4/WG12 N585

ISO 10303-108: Parametrization and constraints for explicit geometric product models

Mike Pratt
RPI & NIST, USA

ISO TC184/SC4 meeting

Bordeaux, France, June 2000

Review of WG12 Parametrics Activities

- Part 108: Parametrization and constraints for explicit geometric product models

  An add-on to models of the AP203 type.

  Upwardly compatible with existing STEP - all pointers are into the existing model.

  No time-dependent constructs.

- Exchange of constructional history models (PWI)

  Work on feature-based constructional operations.

  “Parametrics Framework”: methods for interoperation of history-based with explicit modeling.

Review of WG12 Parametrics Activities (continued)

- JNC work on enhanced assembly modeling in STEP (NWI?)

  Uses Part 108 for assembly constraints.

- General-case or Long-term Parametrics

  Looking towards the future: SC4 Technical Report in preparation.

Motivation behind ISO 10303-108

- CAD exchange models using current STEP are "dumb models". When they have been transferred to a receiving system there is little that can be done with them. All design intent information has been lost.
- The Parametrics Group is working on two fronts to remedy this situation. Part 108 is part of the proposed solution.
- Part 108 provides supplementary information for transmission with an AP203 or similar model, that will control certain aspects of the behavior of the model if it is edited.
- Thus the "dumb model" becomes an "intelligent model".

Control of model behavior by Part 108

- Association of parameters with attributes of the model (e.g., dimensions). A parameter and its associated domain specify design freedom in the model.
- Specification of geometric constraints between elements of the model. These should remain valid if the model is edited; they therefore impose design restraint.
- The transmitted design freedom and restraint capture part of the original design intent, currently lost in transfer,
- Modern CAD systems usually define constraints in 2D sketches and 3D assembly models. Both are covered by Part 108.

General Utility of Part 108

- The proposed basic mechanisms for associating parameters and constraints with a model are very general, and will have wide application to models other than pure geometric models:

  Models of processes
  Models of plans
  Models of variable material properties, etc.

- The mechanism for capturing mathematical relationships between parameters and entity attribute values also has very general application.

Part 108 schemas

parametric_expression_schema:

- model_parameters and parameter domains
- binding of parameters to instance attributes
- instantiable expressions, functions, procedures

explicit_constraint_schema:

- explicit_constraint supertype (very general)
- directed and undirected constraints
- free_form_constraint for defining mathematical relationships between parameters
- defined_constraint with implicit semantics
- fixed_instance_attribute_set

explicit_geometric_constraint_schema

- defined n-ary constraints between elements of geometric models
- parallelism, perpendicularity, incidence, tangency, symmetry, etc.
- dimensional constraints as subtypes of logical constraints
- dimensions of size and location

parametric_assembly_constraint_-schema:

- specialized binary geometric constraints for use in assembly modeling

sketch_constructs_schema:

- representations of 2D sketches with constrained elements
- sketches in neutral and defined planes
- implicit point and curve definitions for imported geometry

Part 108 schemas

- **parametric_expression_schema:**
  - **model_parameters and parameter domains**
  - **binding of parameters to instance attributes**
  - **instantiable expressions, functions, procedures**

Part 108: parametric_expression_schema (1 of 2)

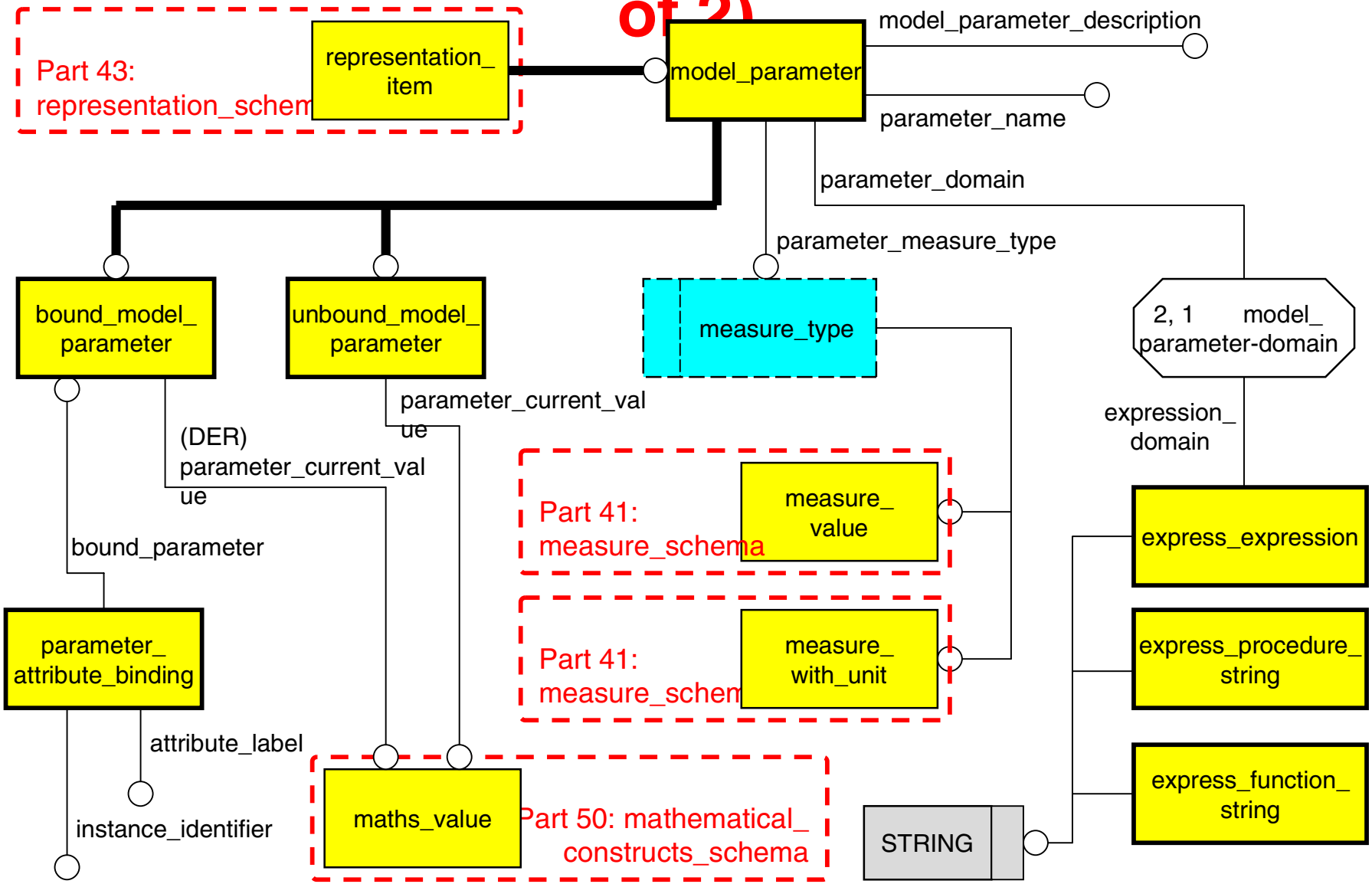

Part 108: parametric_expression_schema (2 of 2)

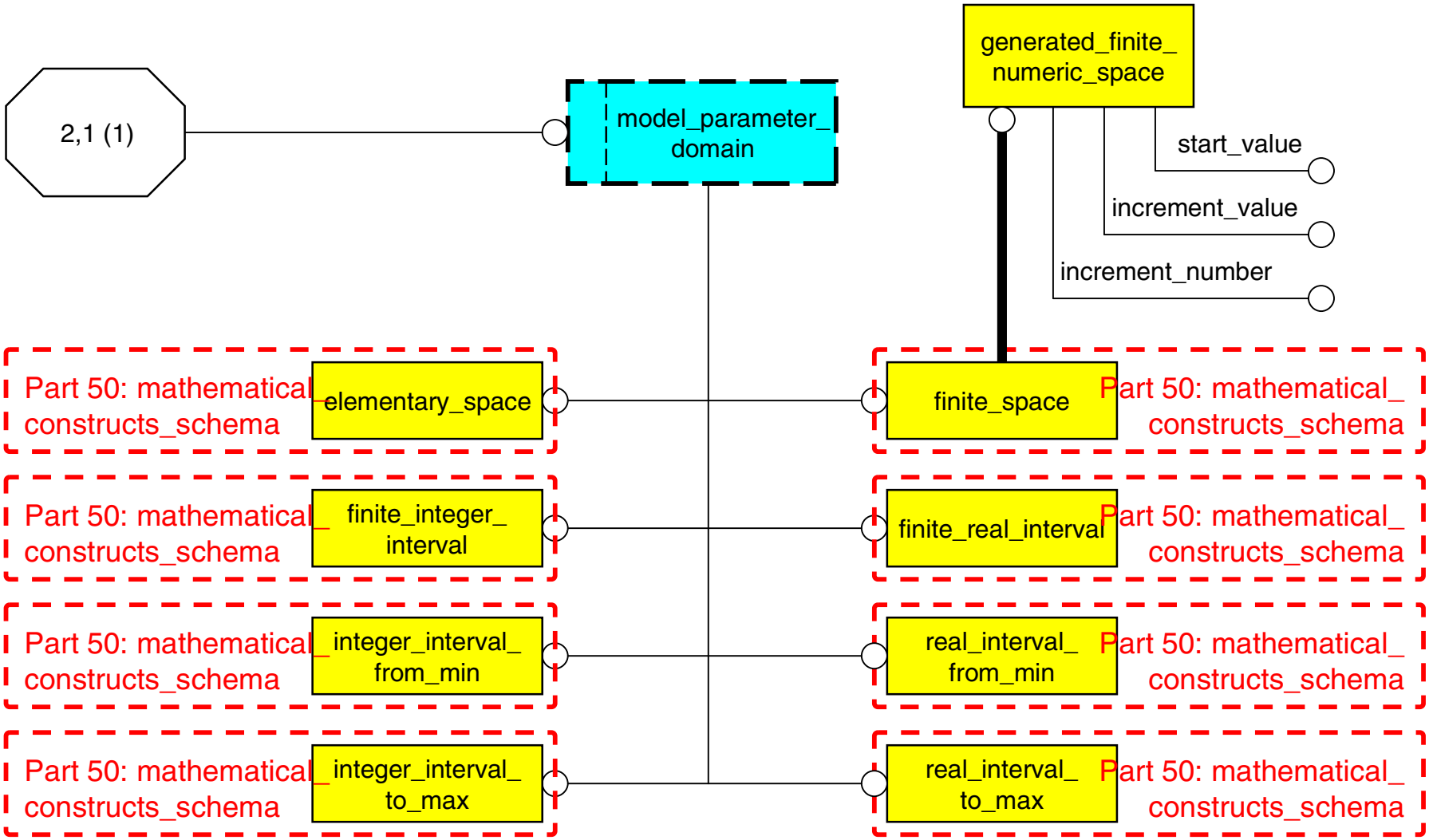

Part 108 schemas

- **explicit_constraint_schema:**
  - **explicit_constraint supertype (very general)**
  - **directed and undirected constraints**
  - **free_form_constraint for mathematical relationships**
  - **defined_constraint with implicit semantics**
  - **fixed_instance_attribute_set**

Part 108: explicit_constraint_schema (1 of 1)

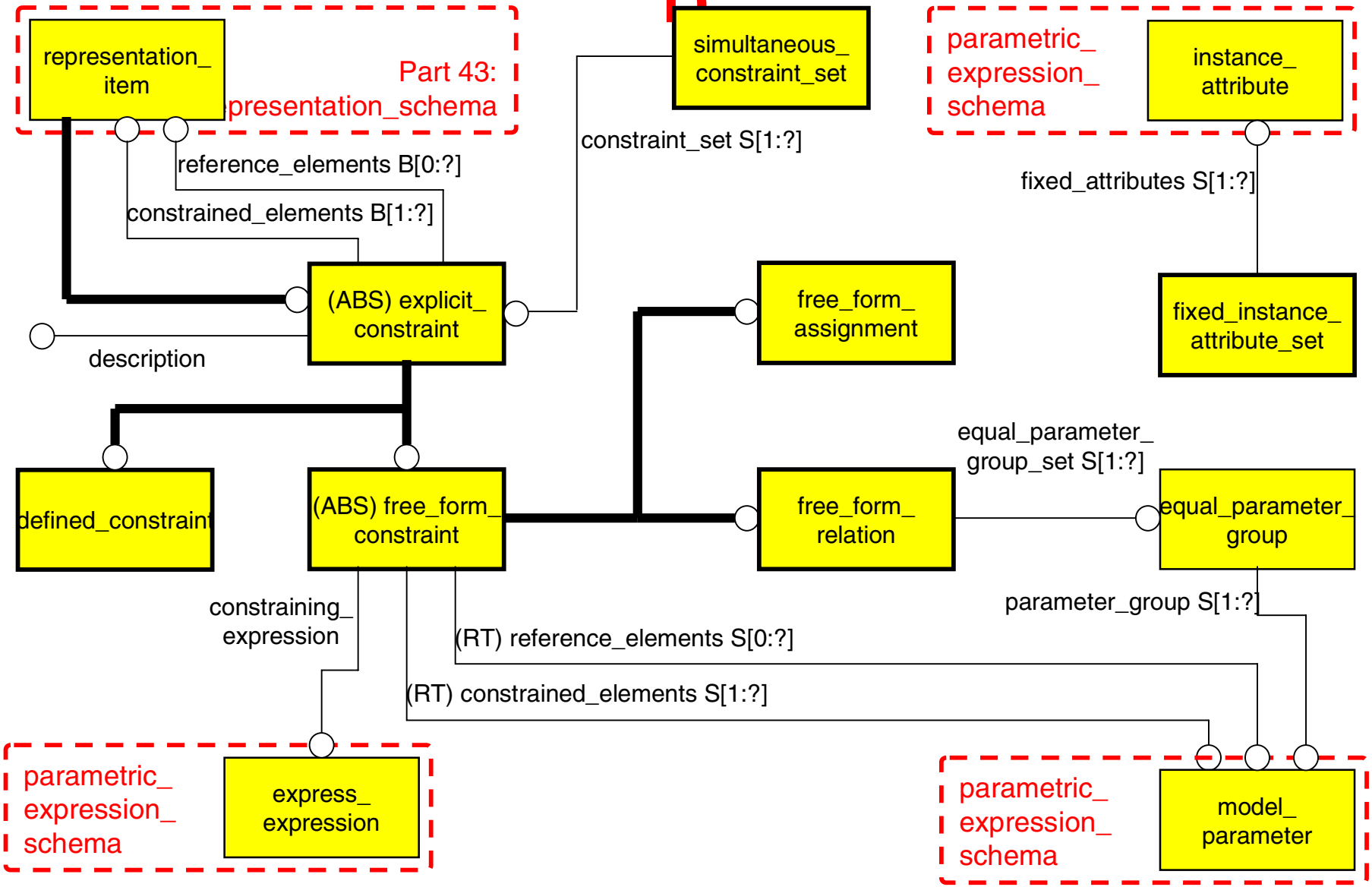

Part 108 schemas

- **explicit_geometric_constraint_schema**
  - defined n-ary constraints between elements of geometric models
  - parallelism, perpendicularity, incidence, tangency, symmetry, etc.
  - dimensional constraints as subtypes of logical constraints
  - dimensions of size and location

Part 108: explicit_geometric_constraint_schema (1 of 9)

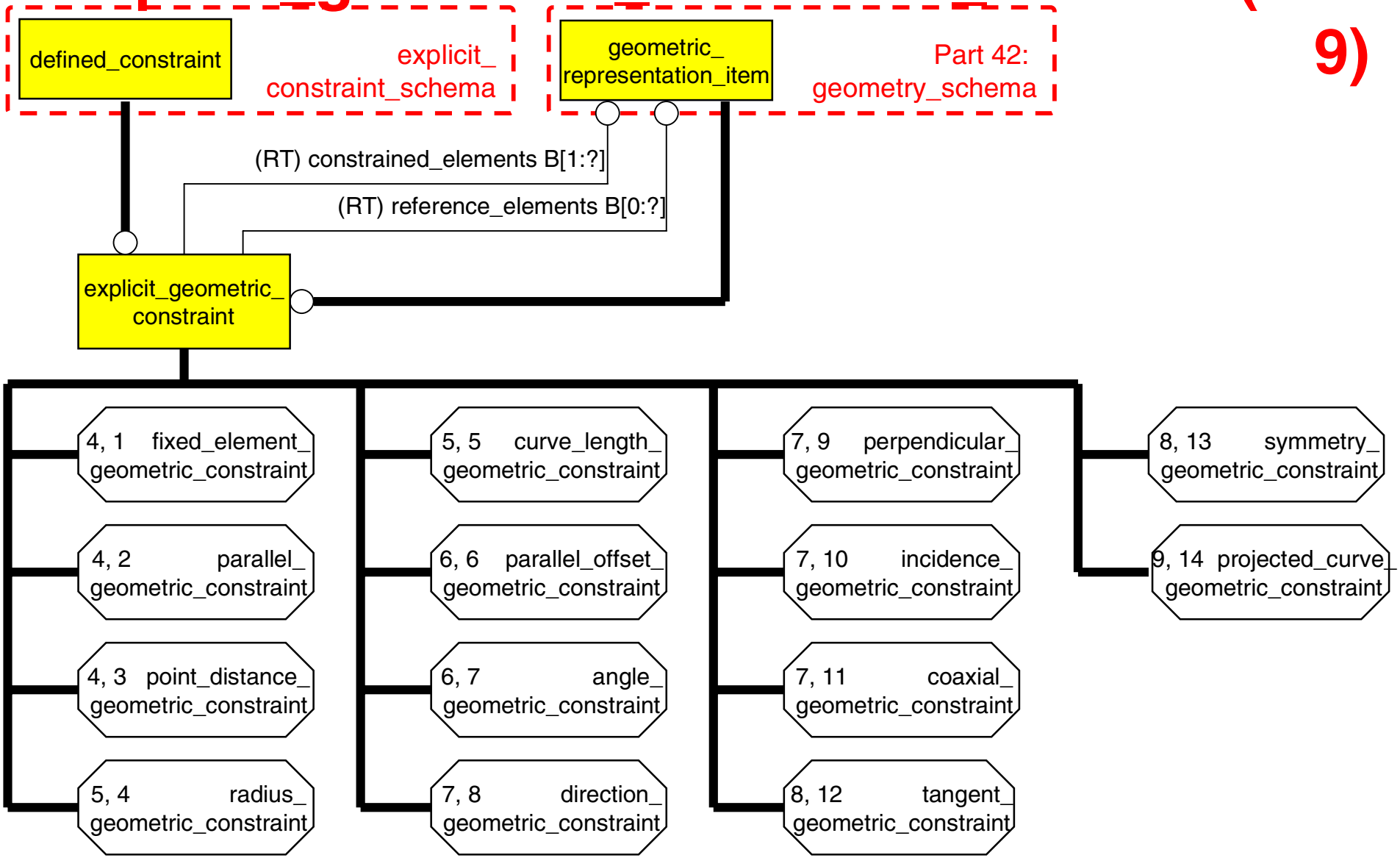

Part 108: explicit_geometric_constraint_schema (2 of 9)

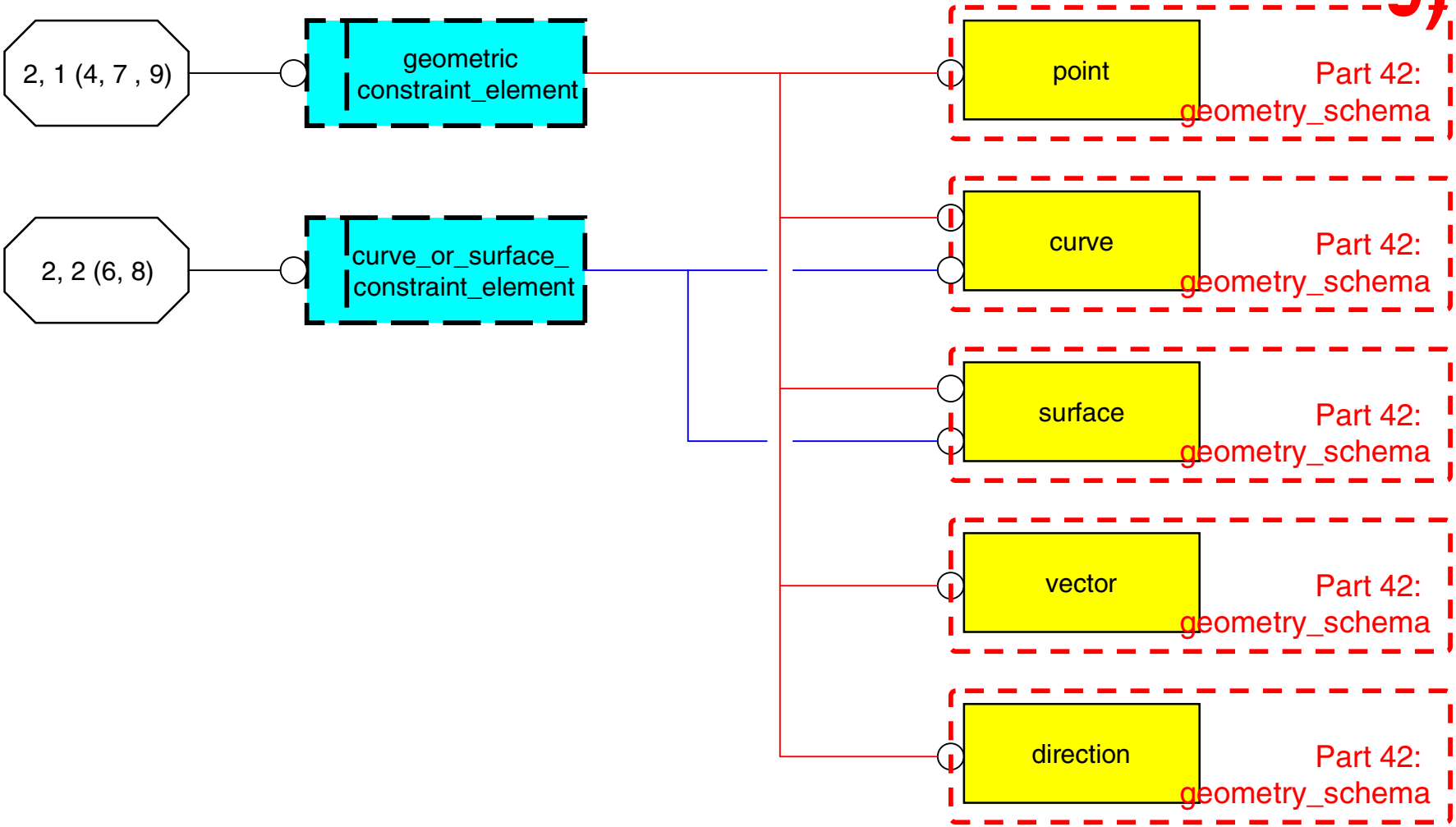

Part 108: explicit_geometric_constraint_schema (3 of 9)

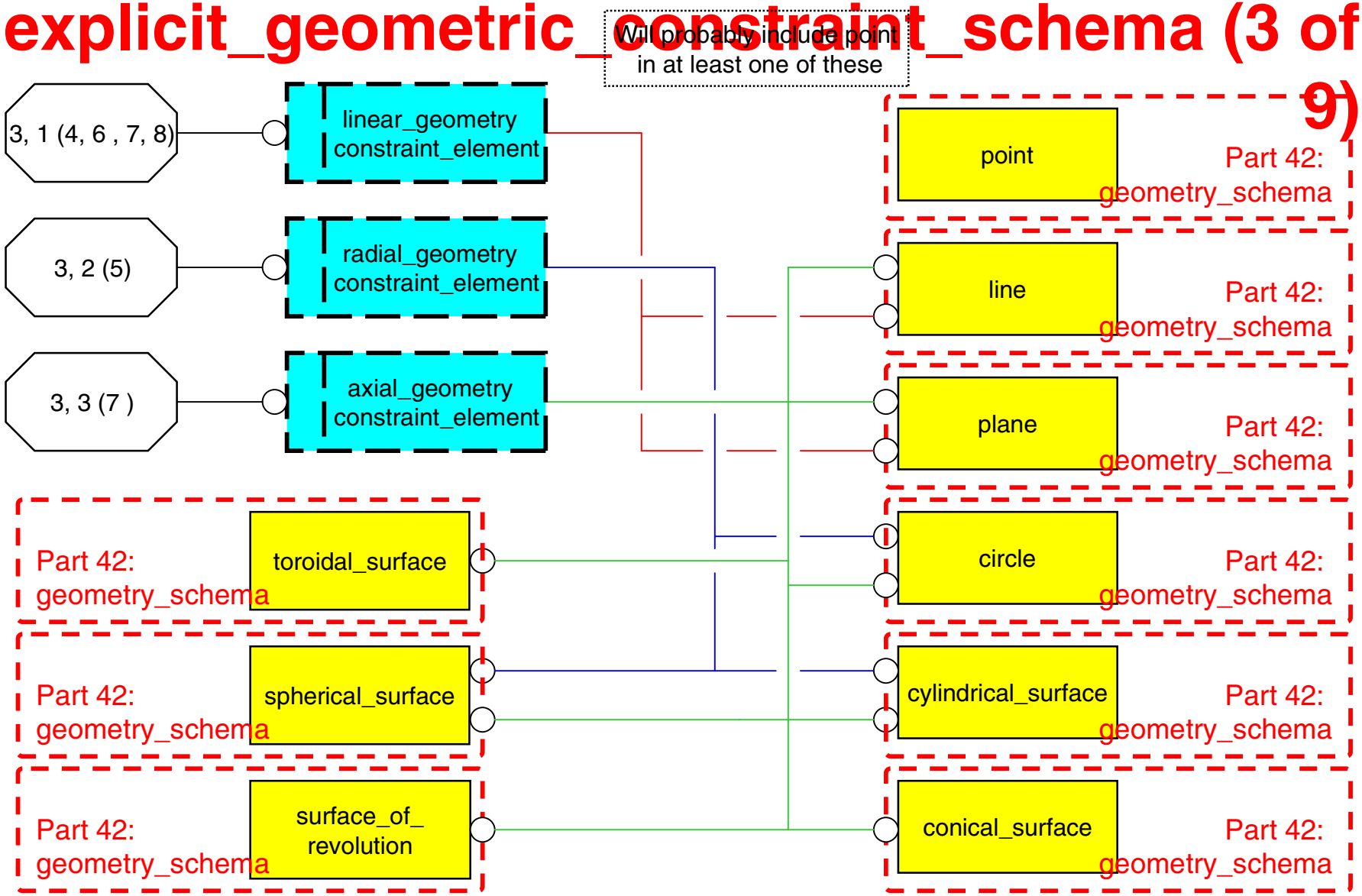

Part 108: explicit_geometric_constraint_schema (4 of 9)

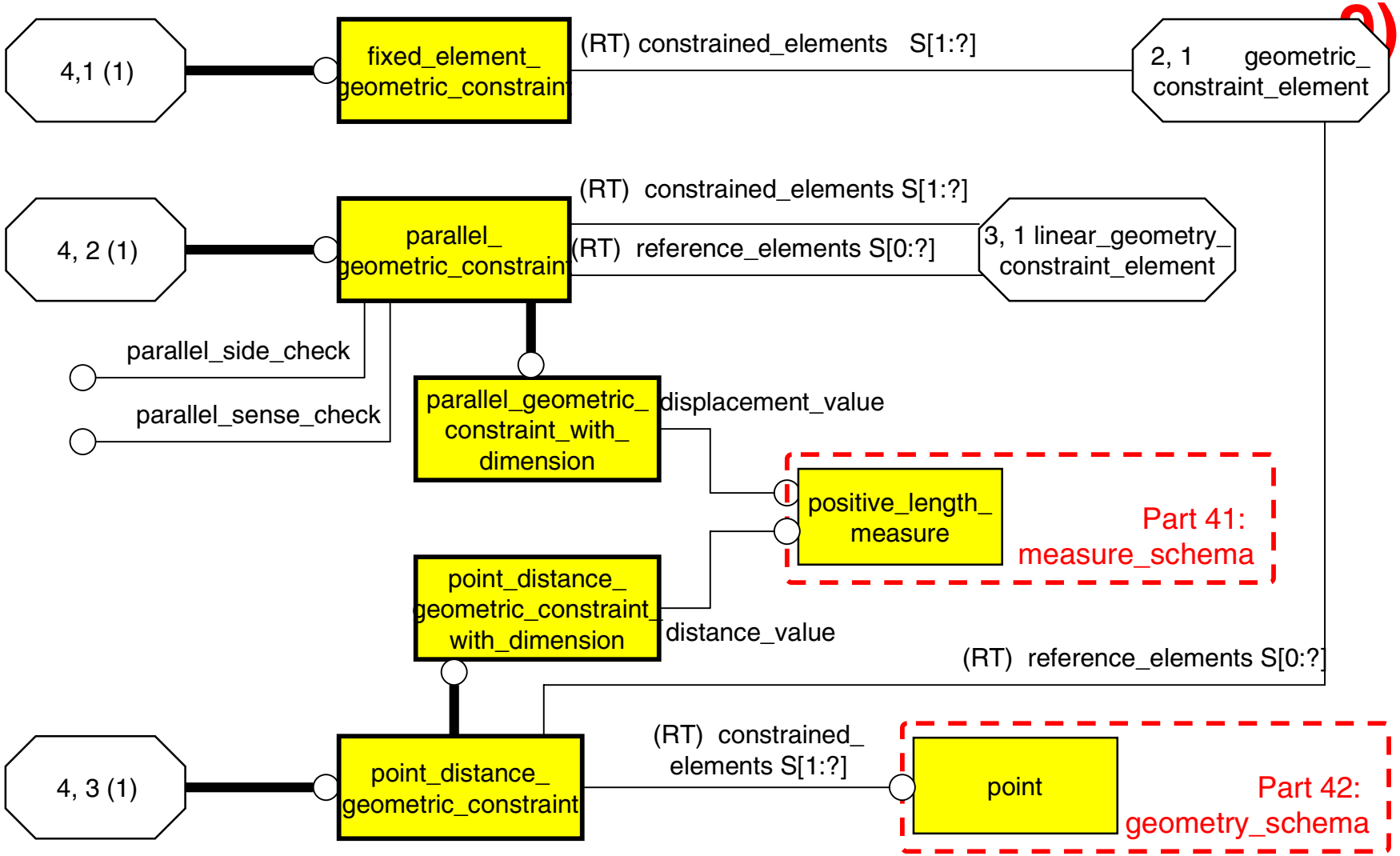

Part 108: explicit_geometric_constraint_schema (5 of 9)

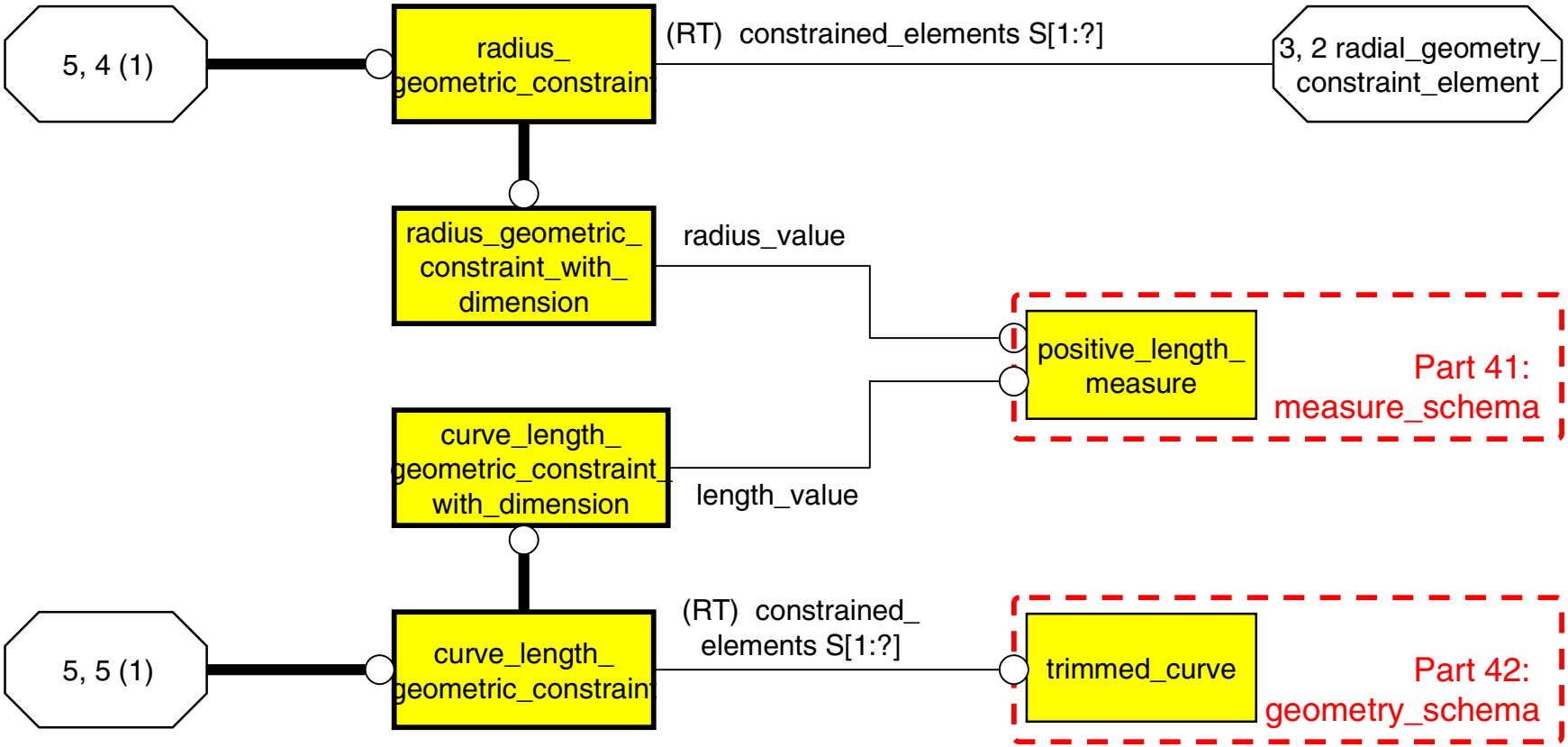

Part 108: explicit_geometric_constraint_schema (6 of 9)

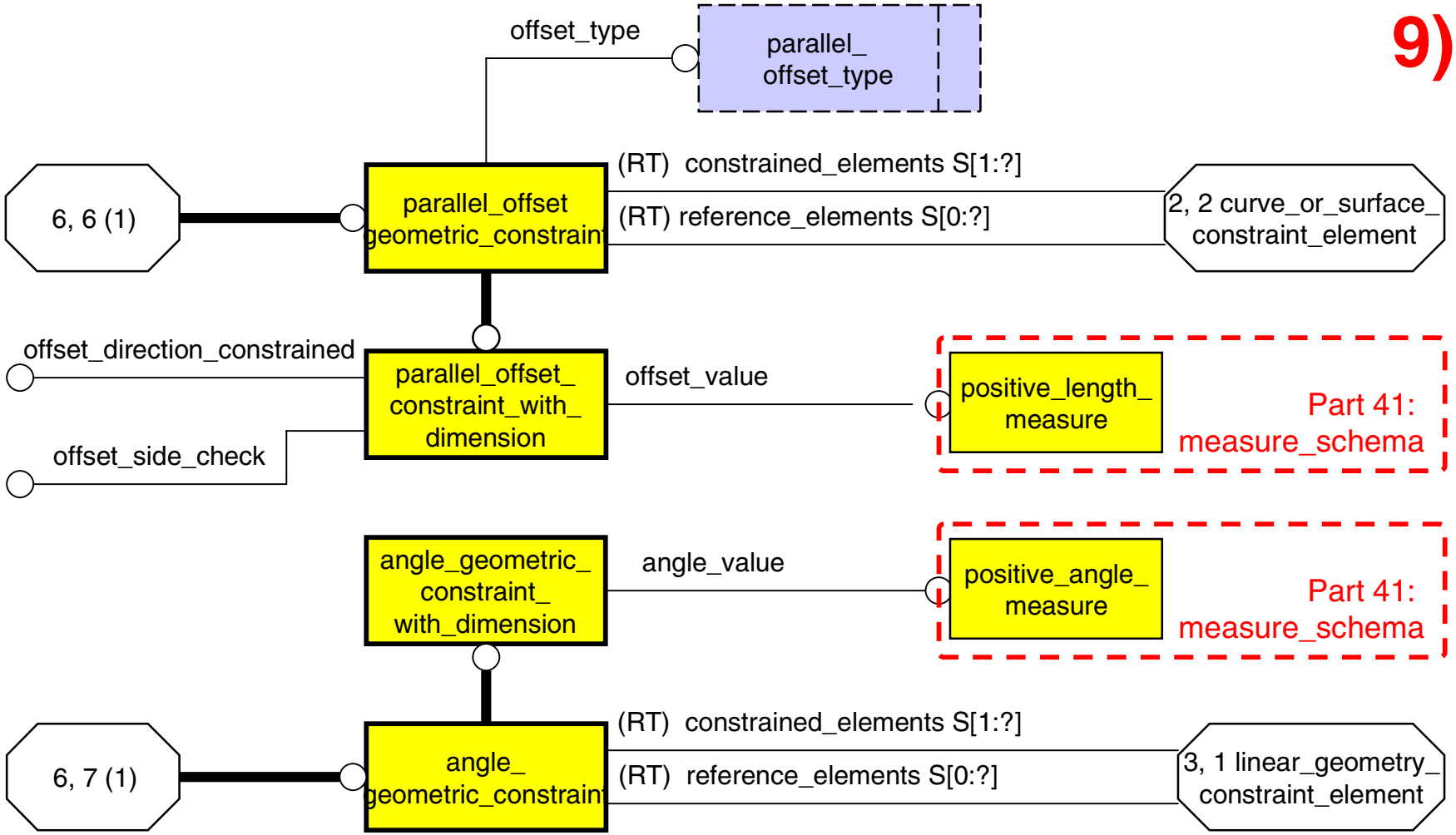

Part 108: explicit_geometric_constraint_schema (7 of 9)

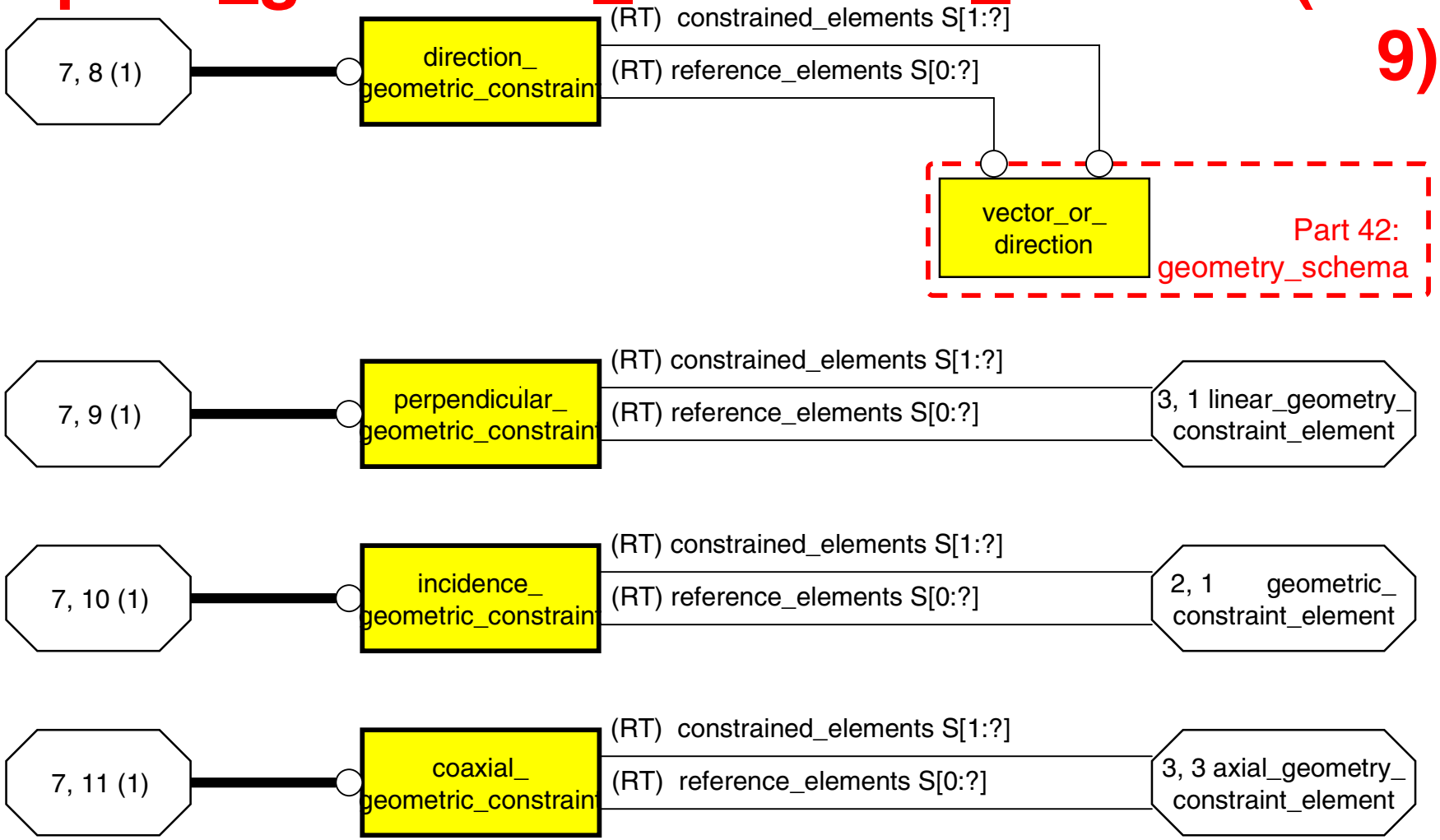

Part 108: explicit_geometric_constraint_schema (8 of 9)

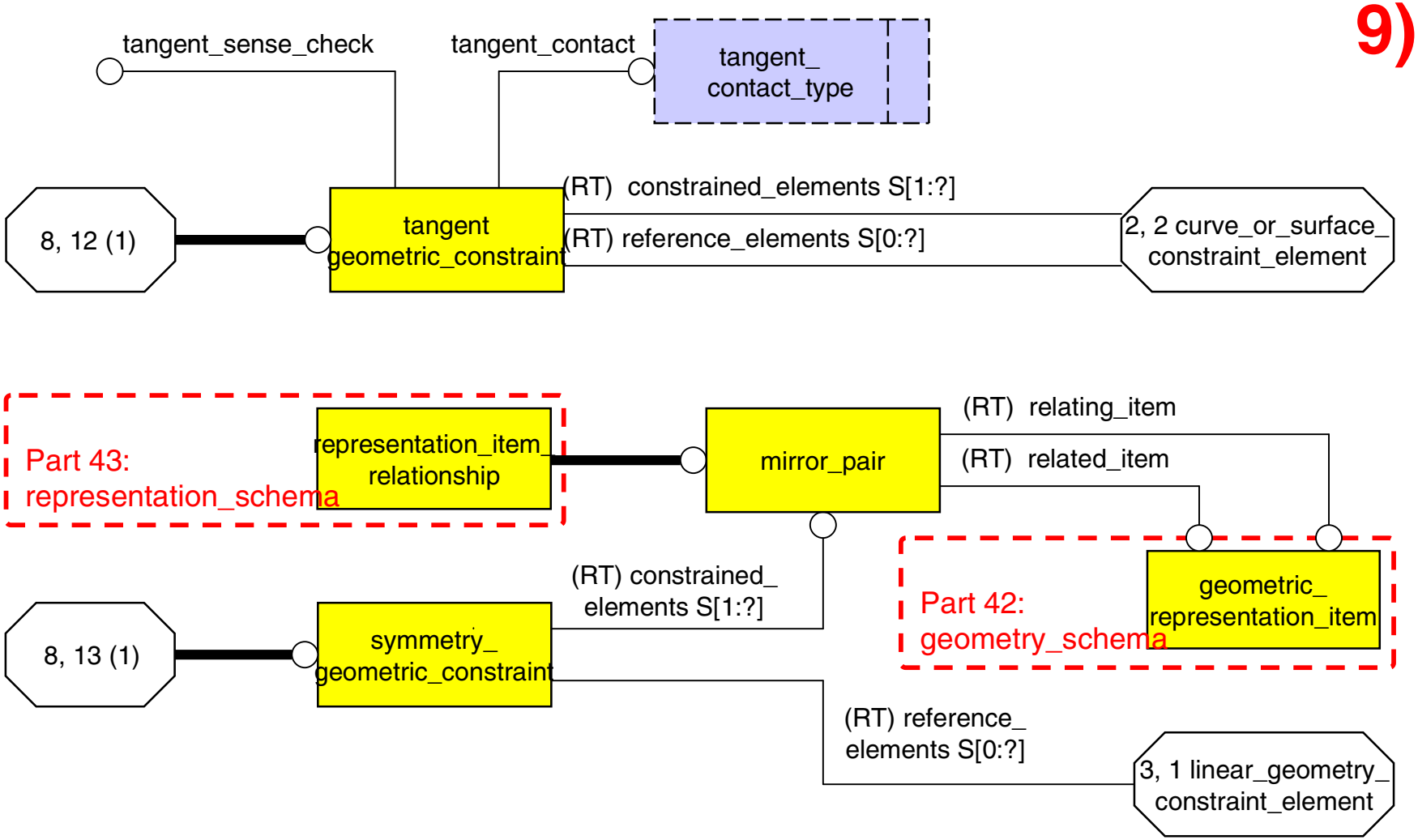

Part 108: explicit_geometric_constraint_schema (9 of 9)

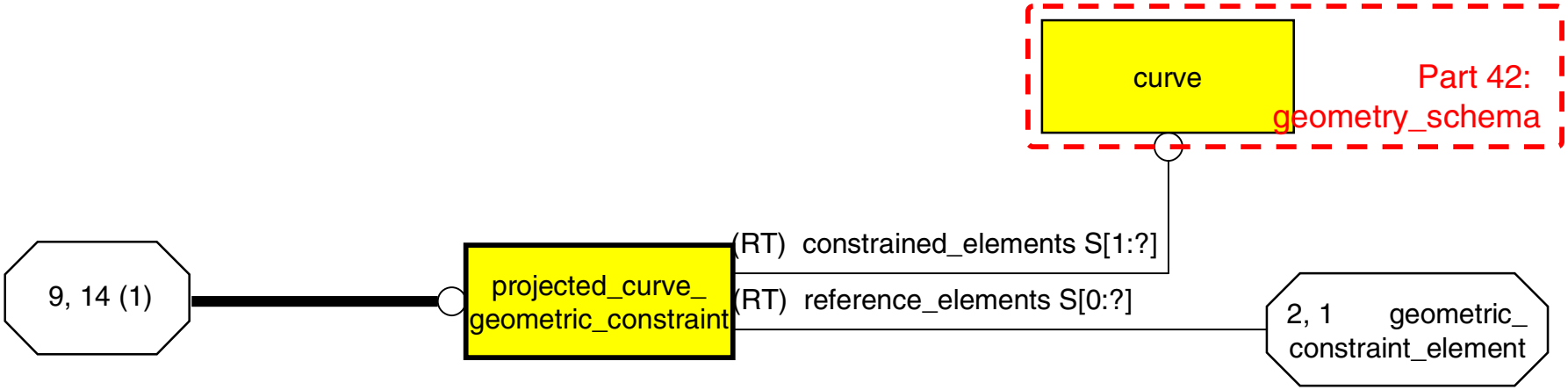

Part 108 schemas

- **parametric_assembly_constraint_schema**:
  - **specialized binary geometric constraints for use in assembly modeling**

Part 108: parametric_assembly_constraint_-schema (1 of 5)

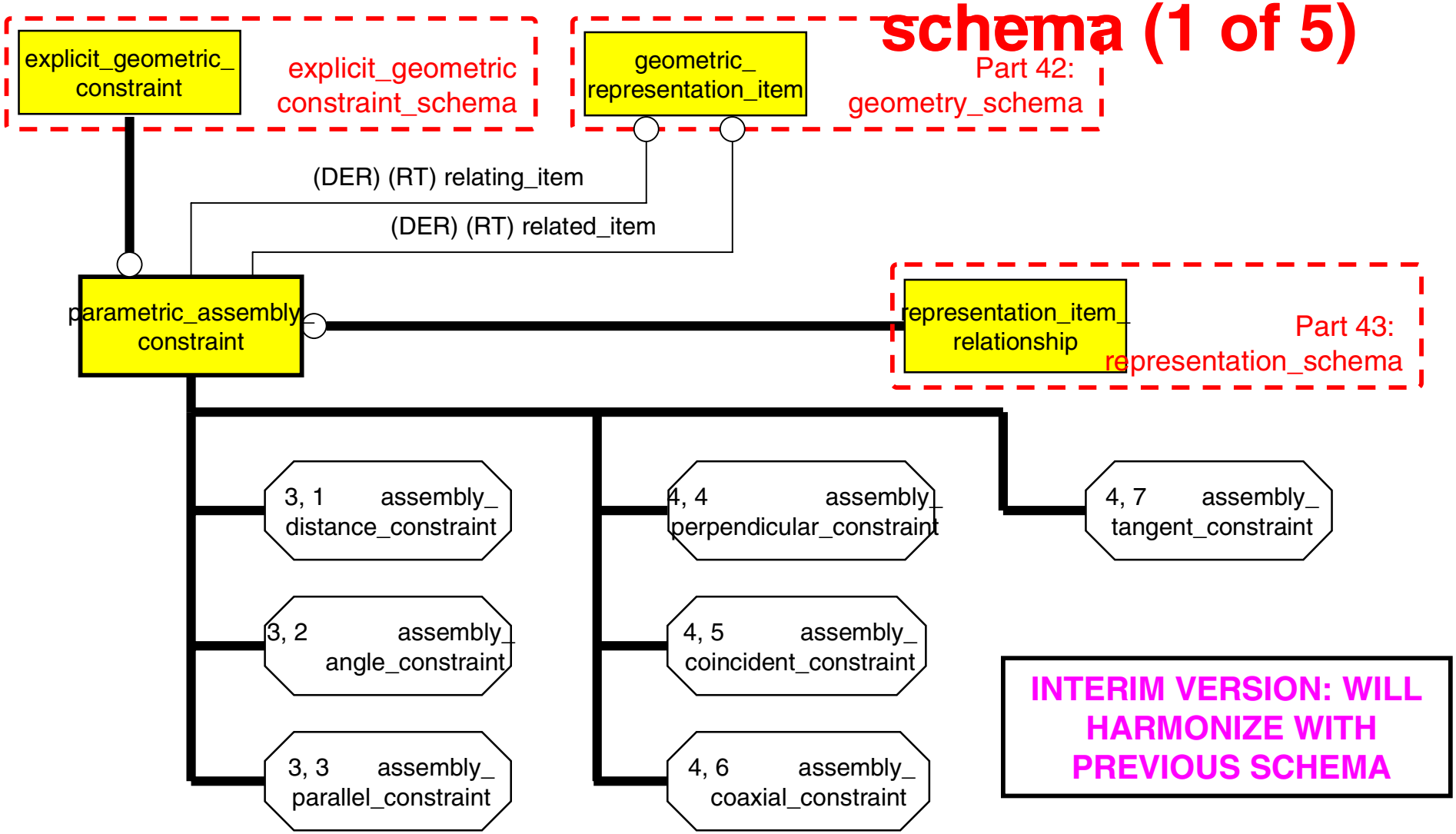

INTERIM VERSION: WILL HARMONIZE WITH PREVIOUS SCHEMA

Part 108: parametric_assembly_constraint-schema (2 of 5)

INTERIM: WILL HARMONIZE WITH PREVIOUS SCHEMA

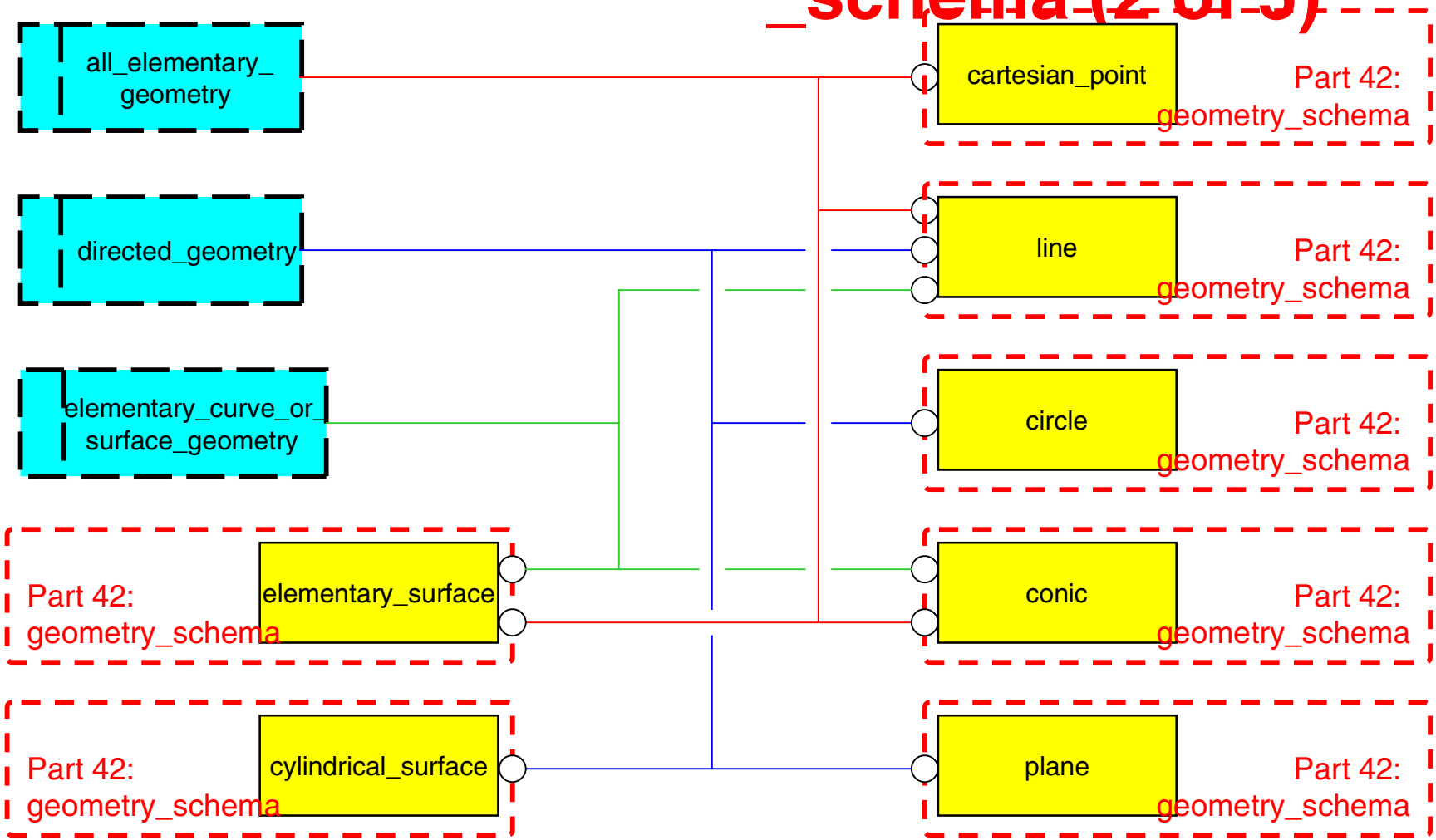

Part 108: parametric_assembly_constraint_-schema (3 of 5)

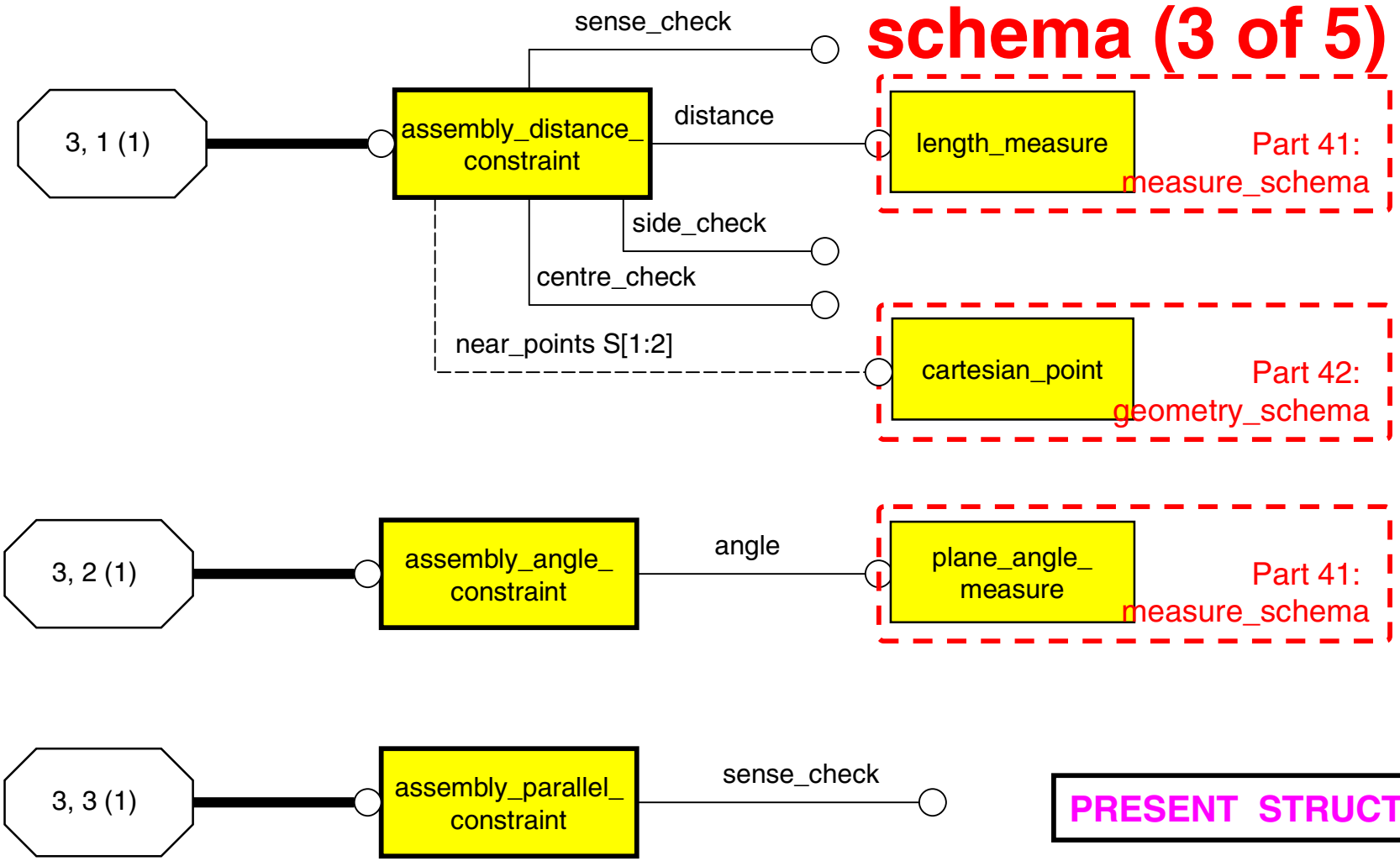

PRESENT STRUCTURE

Part 108: parametric_assembly_constraint_-schema (4 of 5)

PRESENT STRUCTURE

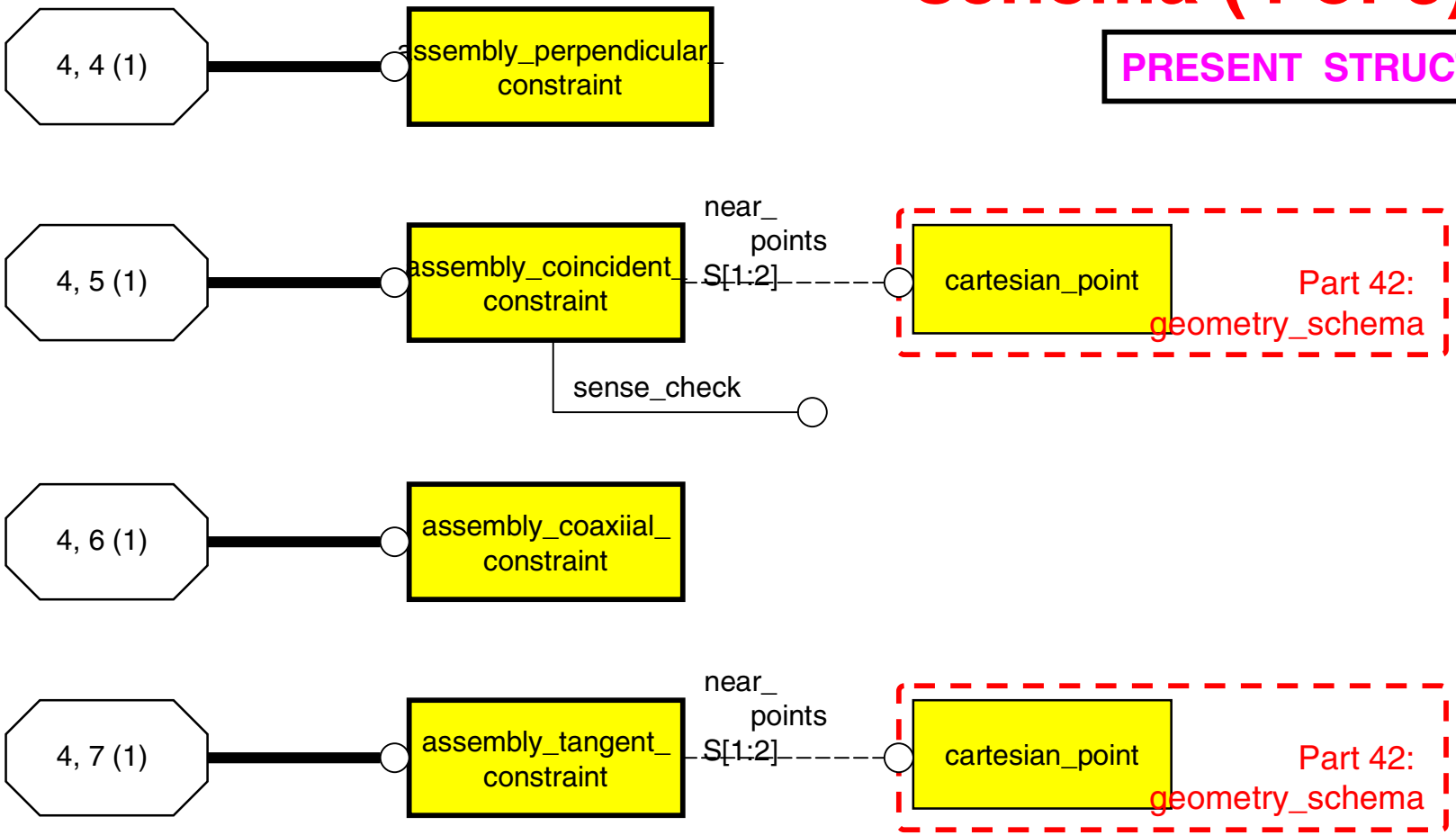

Part 108: parametric_assembly_constraint_-schema (5 of 5)

PRESENT STRUCTURE

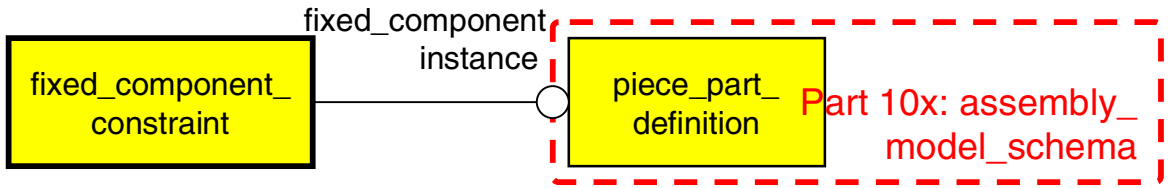

Part 108: parametric_assembly_constraint_-schema (1A of ?)

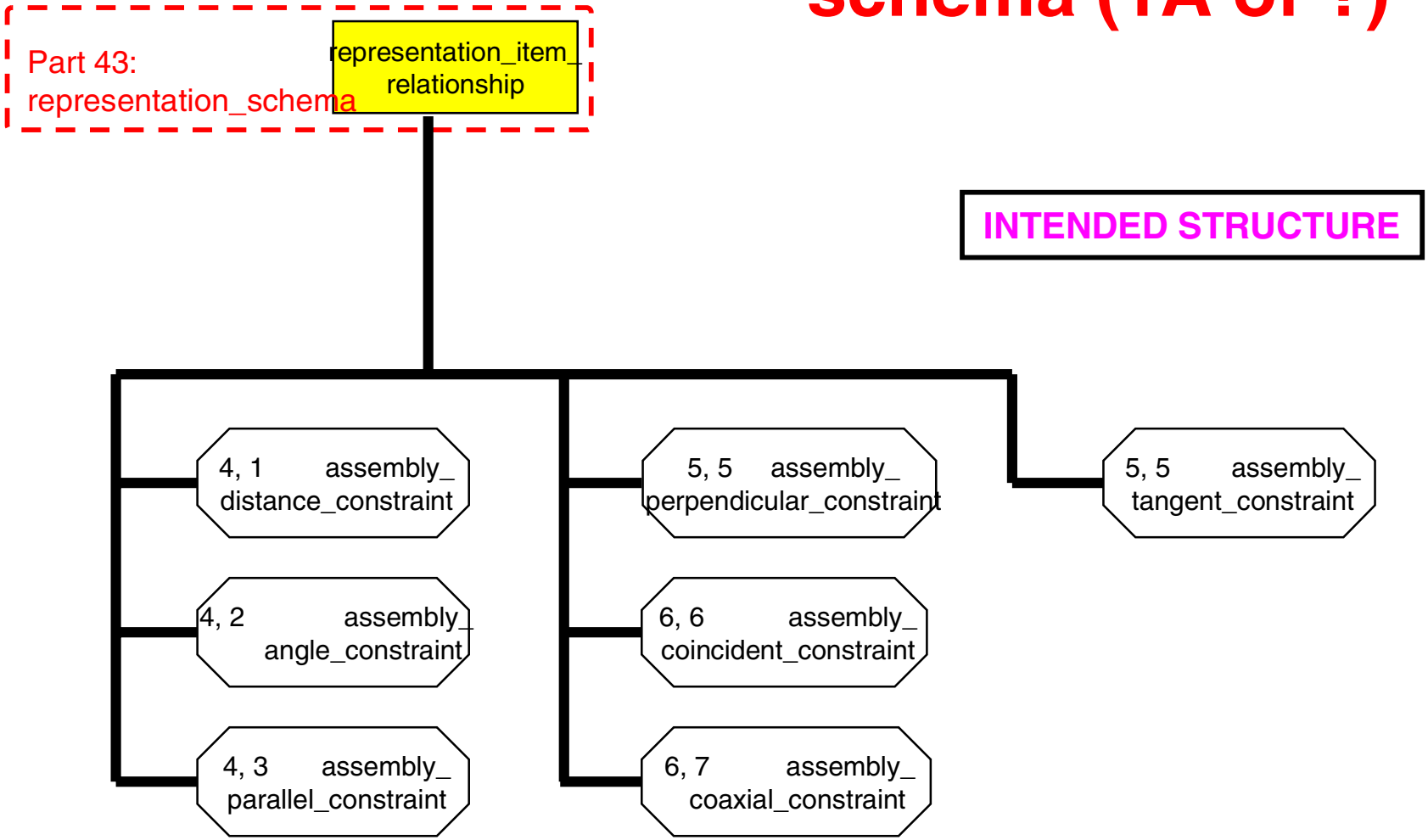

Part 108: parametric_assembly_constraint_-schema (2A of ?)

EXAMPLE OF INTENDED STRUCTURE

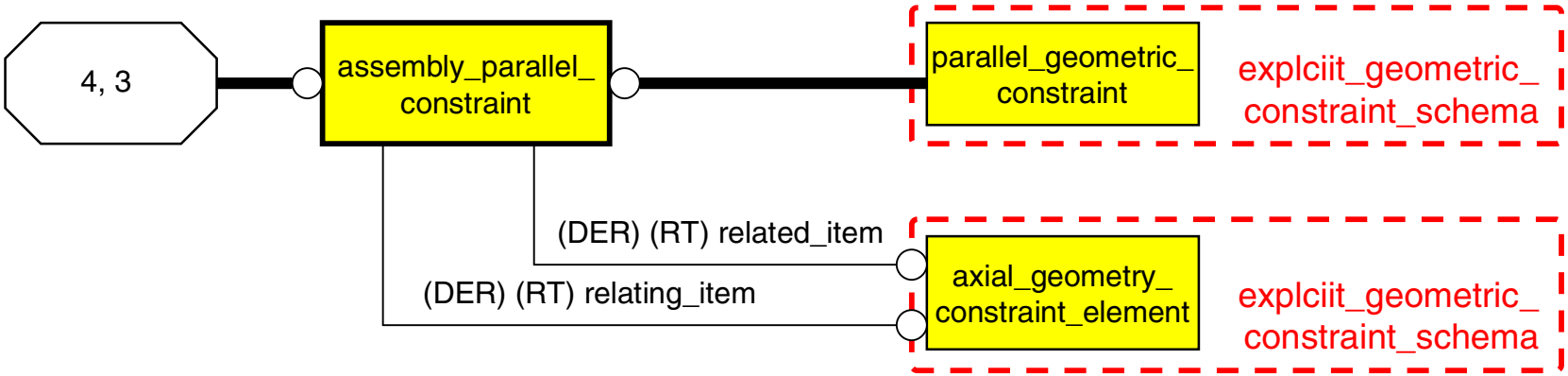

Part 108 schemas

- **sketch_constructs_schema:**
  - **representations of 2D sketches with constrained elements**
  - **sketches in neutral and defined planes**
  - **implicit point and curve definitions for imported geometry**

Part 108: sketch_constructs_schema (1 of 4)

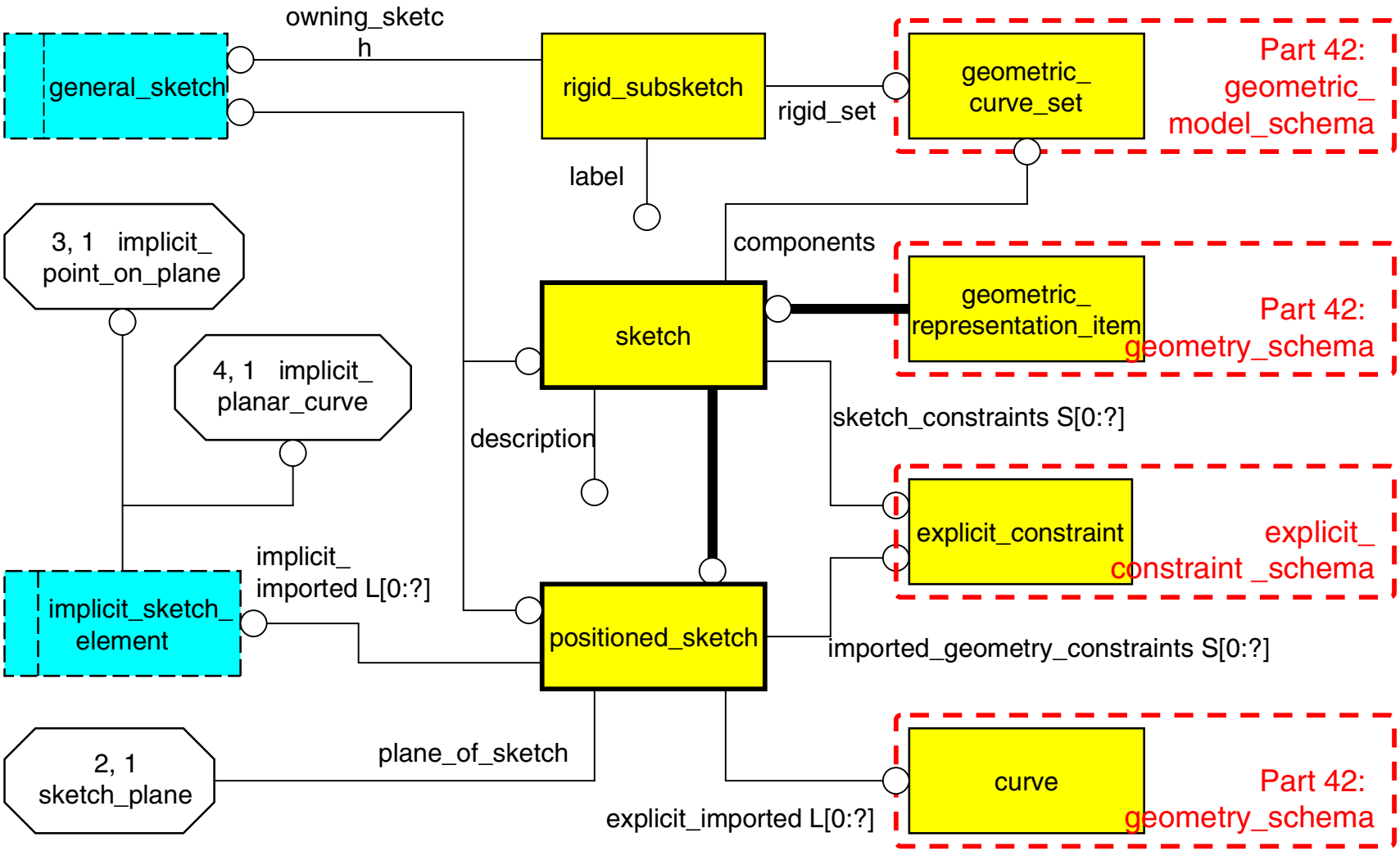

Part 108: sketch_constructs_schema (2 of 4)

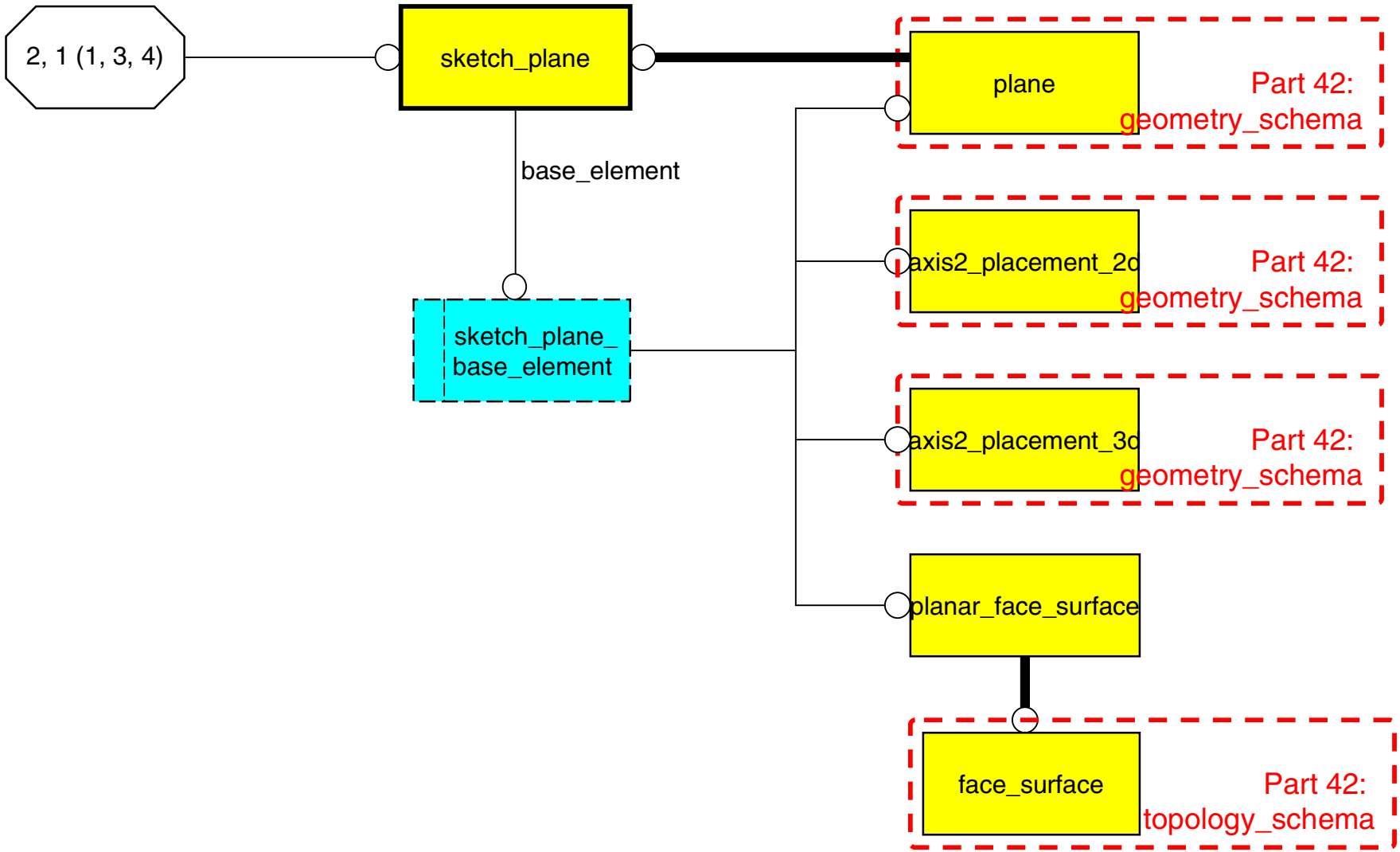

Part 108: sketch_constructs_schema (3 of 4)

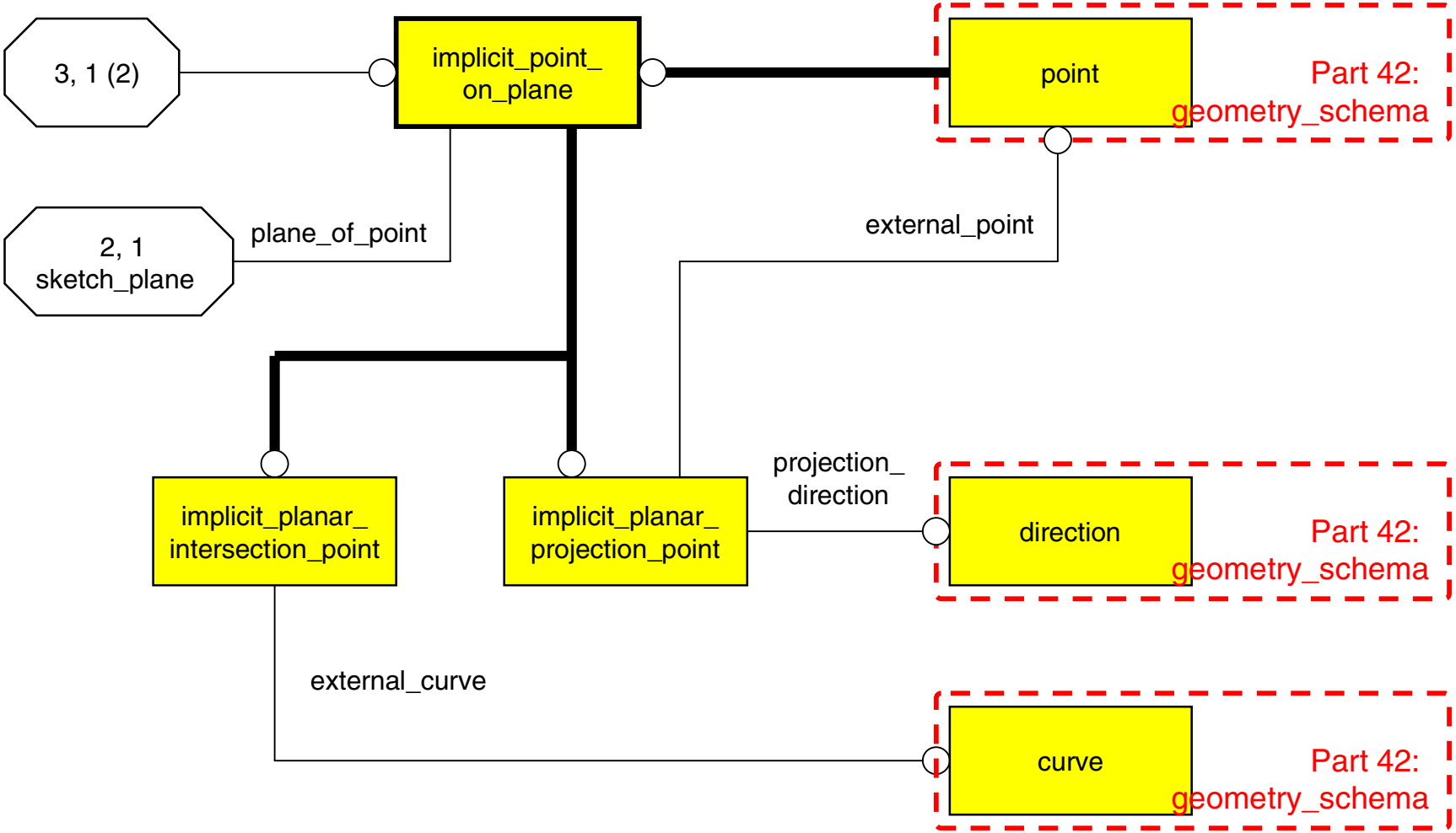

Part 108: sketch_constructs_schema (4 of 4)

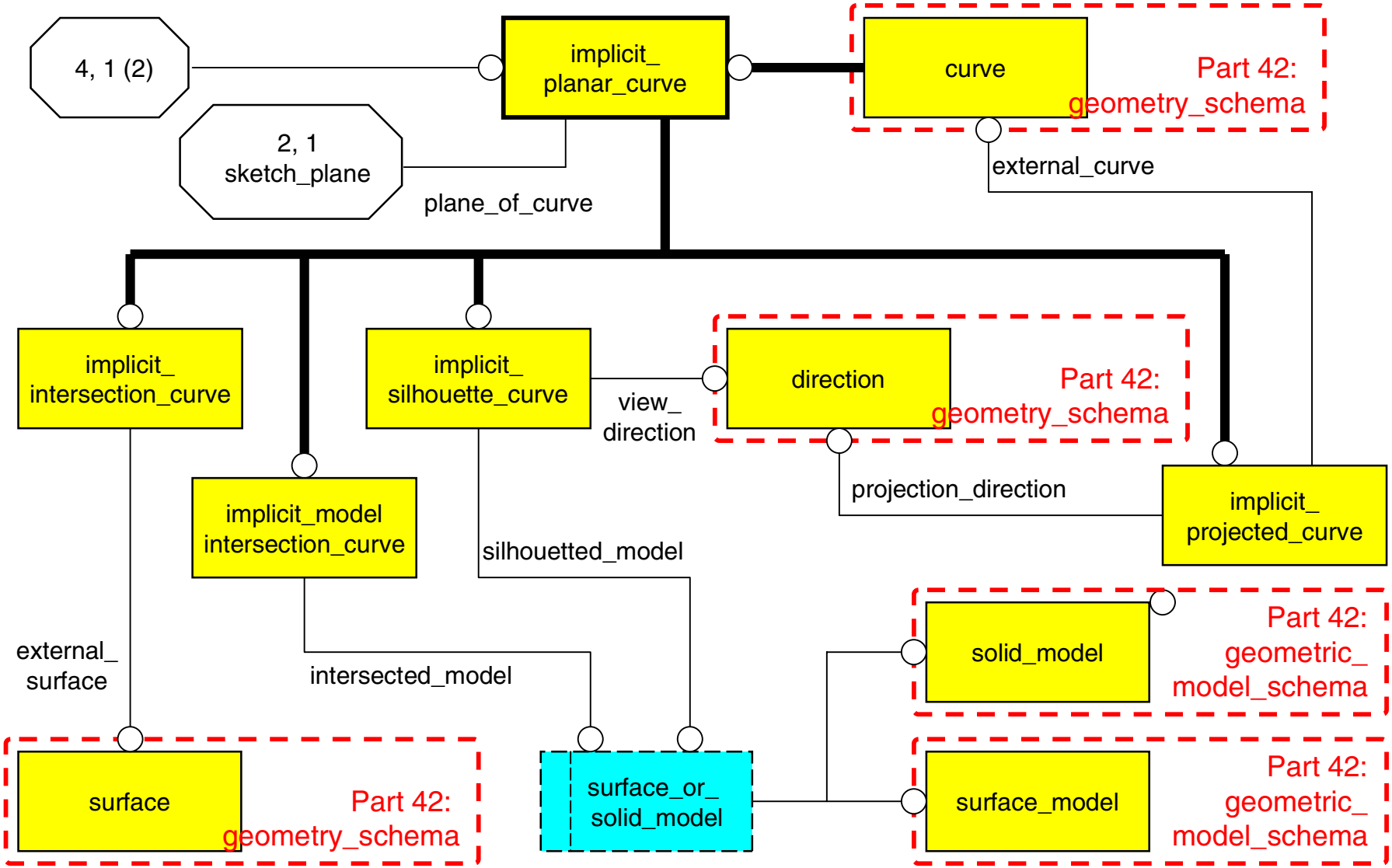

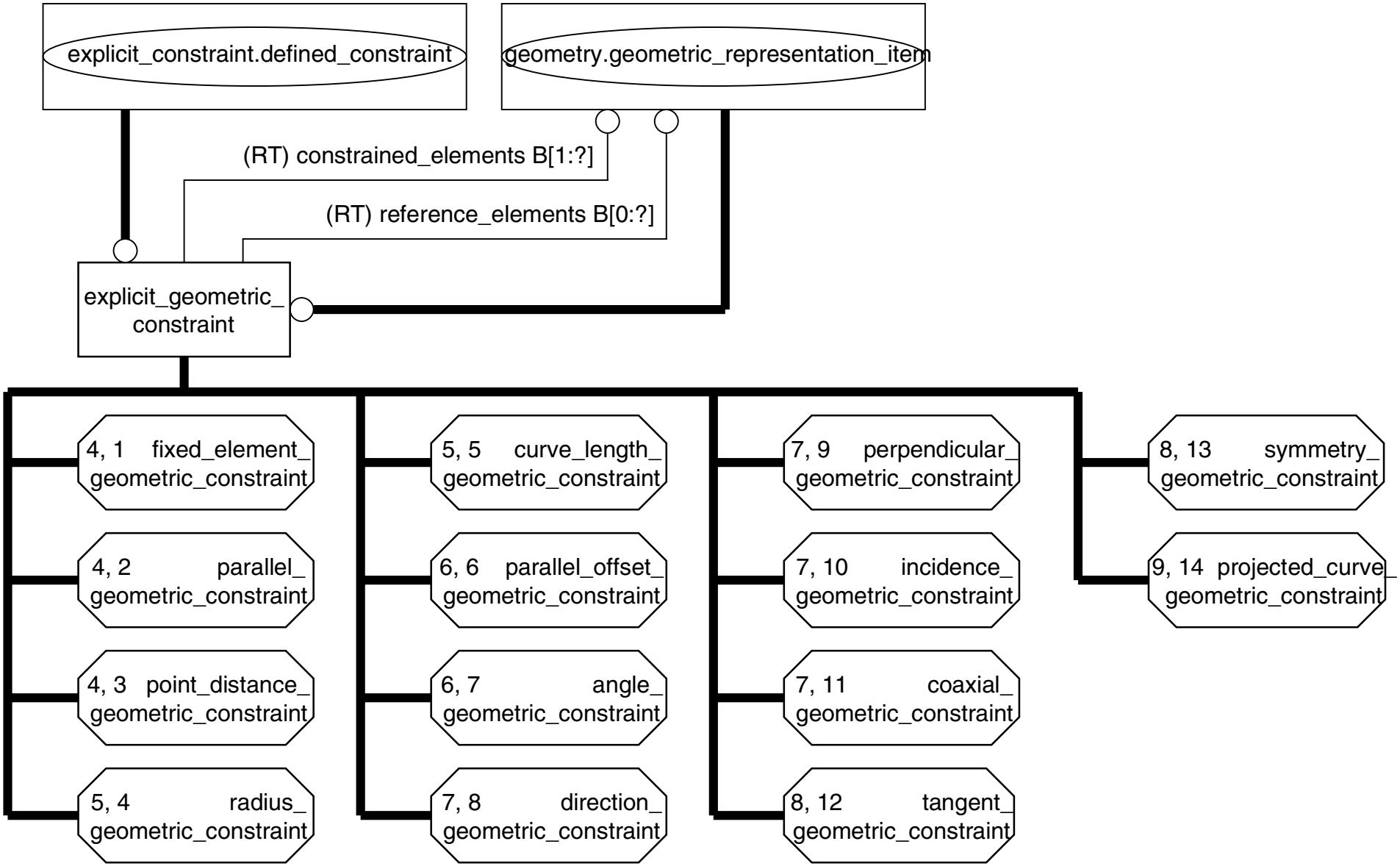
explicit_constraint.defined_constraint
geometry.geometric_representation_item
(RT) constrained_elements B[1:?]
(RT) reference_elements B[0:?]
explicit_geometric_constraint
4, 1 fixed_element_geometric_constraint
4, 2 parallel_geometric_constraint
4, 3 point_distance_geometric_constraint
5, 4 radius_geometric_constraint
5, 5 curve_length_geometric_constraint
6, 6 parallel_offset_geometric_constraint
6, 7 angle_geometric_constraint
7, 8 direction_geometric_constraint
7, 9 perpendicular_geometric_constraint
7, 10 incidence_geometric_constraint
7, 11 coaxial_geometric_constraint
8, 12 tangent_geometric_constraint
8, 13 symmetry_geometric_constraint
9, 14 projected_curve_geometric_constraint