ISO TC 184/SC4/WG3 N1074

Date: 2001-11-20

Supersedes ISO TC 184/SC4/WG3 N792

ISO/IS 10303-227
Product data representation and exchange — Application protocol: Plant spatial configuration

COPYRIGHT NOTICE: This ISO document is an International Standard and is copyright-protected by ISO. Except as permitted under the applicable laws of the user's country, neither this ISO document nor any extract from it may be reproduced, stored in a retrieval system or transmitted in any form or by any means, electronic, photocopying, recording, or otherwise, without prior written permission being secured.

Requests for permission to reproduce should be addressed to ISO at the address below or ISO's member body in the country of the requester:

Copyright Manager
ISO Central Secretariat
1 rue de Varembe
1211 Geneva 20 Switzerland
telephone: +41 22 749 0111
telefacsimile: +41 22 734 0179
Internet: central@isocs.iso.ch
X.400: c=ch; a=400net; p=iso; o=isocs; s=central

Reproduction for sales purposes for any of the above-mentioned documents may be subject to royalty payments or a licensing agreement. Violators may be prosecuted.

ABSTRACT: This document specifies the Application Protocol for the exchange of the spatial configuration of plant systems with a central emphasis on piping systems. This part specifies the information required to construct a piping system, including the shape, material, and arrangements of the components of the system. It also specifies requirements for the physical aspects of other plant systems (e.g., heating, ventilation and air-conditioning) needed to design and layout the piping system.

KEYWORDS: application protocol, heating, ventilation, and air conditioning (HVAC), piping system, process plant, spatial configuration

COMMENTS TO READER: This document has been reviewed using the internal review checklist (see WG3 N1069) and the project leader checklist (see WG3 N1070) and the convener checklist (see WG3 N1071), and has been determined to be ready for this ballot cycle.

Project Leader: Mark E. Palmer
Address: National Institute of Standards and Technology
100 Bureau Dr., Stop 8630
Building 226, Room B306
Gaithersburg, MD 20899
USA
Telephone: +1 301-975-5858
Telefacsimile: +1 301-975-5433
Electronic mail: mark.palmer@nist.gov

Project Editor: Dr. Burton F. Gischner
Address: Electric Boat Corporation
Dept. 450
75 Eastern Point Road
Groton, CT 06340
USA
Telephone: +1 860-433-3948
Telefacsimile: +1 860-433-4545
Electronic mail: bgischne@ebmail.gdeb.com

© ISO 2001 - All rights reserved 2001
All rights reserved. Unless otherwise specified, no part of this publication may be reproduced or utilized in any form or by any means, electronic or mechanical, including photocopying and microfilm, without permission in writing from the publisher.

International Organization for Standardization
Case Postale 56 • CH-211 Genève 20 • Switzerland

Contents

Page

Foreword …… ix

Introduction …….…..... x

1 Scope ……1

2 Normative references ……...…… 5

3 Terms, definitions, and abbreviations ……..……7
3.1 Terms defined in ISO 10303-1 ……...……..7
3.2 Terms defined in ISO 10303-31 …….…..7
3.3 Other Definitions …….…7
3.4 Abbreviations ……..……14

4 Information Requirements ……..……17
4.1 Units of functionality ……..……18
4.2 Application objects ……...…..36
4.3 Application assertions ……. 212

5 Application interpreted model ……..238
5.1 Mapping specification ……..238
5.2 AIM EXPRESS short listing ……889

6 Conformance requirements ……1005
6.1 Conformance class 1, piping system functional information ……1005
6.2 Conformance class 2, equipment and component spatial information ……...1006
6.3 Conformance class 3, plant layout and piping design information.……1006
6.4 Conformance class 4, piping fabrication and installation information ……..1008
6.5 Conformance class 5, piping inspection information ……1009
6.6 Conformance class 6, HVAC system functional information ……1010
6.7 Conformance class 7, HVAC spatial information …… 1010
6.8 Conformance class 8, cableway spatial information ……. 1012
6.9 Conformance class 9, piping and HVAC analysis information ……1012
6.10 Options within a conformance class …….…….. 1013

Annex A (normative) AIM EXPRESS expanded listing ……...1027

Annex B (normative) AIM short names of entities ……...1179

Annex C (normative) Implementation method-specific requirements ……..1187

Annex D (normative) Protocol Information Conformance Statement proforma ……...1188

Annex E (normative) Information object registration ……1189
E.1 Document identification ……1189
E.2 Schema identification ……1189

© ISO 2001 — All rights reserved

Contents cont'd.

Page

Annex F (informative) Application activity model …….. 1190
F.1 Application activity model definitions and abbreviations …… 1190
F.2 Application activity model diagrams …… 1210
F.3 AAM/ARM Correspondence …… 1233

Annex G (informative) Application reference model …….. 1237

Annex H (informative) AIM EXPRESS-G …….. 1280

Annex J (informative) AIM EXPRESS listing …… 1322

Annex K (informative) Application protocol usage guide …….. 1323
K.1 Identifiers ……. 1323
K.2 Units ……. 1329
K.3 Mapped_item and representation_item …… 1332
K.4 Interfaces to ISO 13584 and ISO 10303-221 ……... 1335
K.5 Precedence of geometric descriptions ……. 1338
K.6 Lines and line segments …….. 1338

Annex L (informative) Technical discussions …… 1340
L.1 Fitting parameters and nominal size …… 1340
L.2 Value range, family definitions and range values …… 1342
L.3 Piping specifications …… 1343
L.4 Catalogues items and connectors …… 1343
L.5 Pipe lengths …… 1344
L.6 Logical connectivity and relationship to physical design …… 1344

Bibliography ……1346

 © ISO 2001 — All rights reserved

Figures

Page

Figure 1 - Data planning model x
Figure 2 - Process plant life cycle activity coverage 1
Figure 3 - Base_elbow_support 37
Figure 4 - Base_line_support 38
Figure 5 - Blind_flange 39
Figure 6 - Boss 41
Figure 7 - Bushing 43
Figure 8 - Cap 46
Figure 9 - Pipe Clamp 55
Figure 10 - Compound_bend_pipe 56
Figure 11 – Socket weld Coupling 60
Figure 12 – Butt-weld Cross 61
Figure 13 - Cross_section_flat_oval 63
Figure 14 - Cross_section_radiused_corner 64
Figure 15 - Dummy_leg 68
Figure 16 - Eccentric_base_elbow_support 68
Figure 17 - Eccentric_reducer 69
Figure 18 - Elbow 70
Figure 19 - Expander_flange 75
Figure 20 - Female_end 77
Figure 21 - Ferrule 78
Figure 22 - Hole_straddle_centreline_orientation 80
Figure 23 - Flanged_end 81
Figure 24 - Raised face flange 82
Figure 25 - Flat face flange 82
Figure 26 - Ring type joint flange 82
Figure 27 - Male and female flange 83
Figure 28 - Tongue and groove flange 83
Figure 29 - Grooved_end 90
Figure 30 - Gusset 91
Figure 31 - Hvac_elbow_90deg_reducing 100
Figure 32 - Hvac_elbow_centred 101
Figure 33 - Hvac_elbow_mitre 103
Figure 34 - Hvac_offset_ogee_centred 108
Figure 35 - Transition - Rectangular to Round 114
Figure 36 - Transition - Rectangle to Round Slanted 115
Figure 37 - Insert 117
Figure 38 - Lap_joint_flange 121
Figure 39 - Lap_joint_stub_end 121
Figure 40 - Lateral 123
Figure 41 - Mitre_bend_pipe 130
Figure 42 - Nipple 131
Figure 43 - Olet 132
Figure 44 - Orifice_flange 134
Figure 45 - Orifice_plate 135
Figure 46 - Paddle_blank 137
Figure 47 - Paddle_spacer 138

© ISO 2001 — All rights reserved

Figures cont'd.

Page

Figure 48 - Perforated_cap 139
Figure 49 - Butt-weld Pipe Cap 141
Figure 50 - Plate 168
Figure 51 - Plug 168
Figure 52 - Reducer 172
Figure 53 - Reducing_flange 173
Figure 54 - Reinforcing_plate 174
Figure 55 - Ring_spacer 176
Figure 56 - Shoe 182
Figure 57 - Slip_on_flange 185
Figure 58 - Slip_on_jacket_flange 186
Figure 59 - Socket 187
Figure 60 - Socket_weld_flange 187
Figure 61 - Spectacle_blind 189
Figure 62 - Stay 191
Figure 63 - Stopper 192
Figure 64 - Stub_in 196
Figure 65 - Tee 201
Figure 66 - Threaded 203
Figure 67 - Threaded_flange 203
Figure 68 - Trunnion 205
Figure 69 - Union 206
Figure 70 - Weld_neck_flange 209
Figure 71 - Weld_neck_jacket_flange 209
Figure 72 - Y_type_lateral 210
Figure F.1 - IDEF0 basic notation 1210
Figure F.2 - A-0: Process Plants 1211
Figure F.3 - A0: Perform Process Plant Life-cycle Activities 1212
Figure F.4 - A1: Manage and Plan Project 1213
Figure F.5 - A2: Design and Engineer Plant 1214
Figure F.6 - A21: Produce Conceptual Process Design 1215
Figure F.7 - A22: Produce Conceptual Plant Design 1216
Figure F.8 - A23: Produce Final Process Design 1217
Figure F.9 - A24: Produce Final Plant Design 1218
Figure F.10 - A242: Finalize Layout and Spatial Design 1219
Figure F.11 - A2426: Finalize Piping 1220
Figure F.12 - A24262: Finalize 3D Piping Details 1221
Figure F.13 - A3: Procure Goods and Services 1222
Figure F.14 - A4: Construct and Commission Plant 1223
Figure F.15 - A42: Obtain Construction Services 1224
Figure F.16 - A423: Obtain Piping Systems 1225
Figure F.17 - A4233: Shop Fabricate Piping 1226
Figure F.18 - A42331: Prepare Shop Fabrication Piping 1227
Figure F.19 - A42332: Shop Fabricate Piping 1228
Figure F.20 - A42333: Inspect Shop Fabricated Piping 1229
Figure F.21 - A42334: Complete and Ship Shop Fabricated Piping 1230
Figure F.22 - A5: Manage, Operate, and Maintain Plant 1231

 © ISO 2001 — All rights reserved

Figures cont'd.

Page

Figure F.23 - A6: Decommission and Dispose of Plant ……1232
Figure G.1 - Off-page connectors ……..1237
Figure G.2 - ARM diagram 1 of 42 ……...1238
Figure G.3 - ARM diagram 2 of 42 ……...1239
Figure G.4 - ARM diagram 3 of 42 ……...1240
Figure G.5 - ARM diagram 4 of 42 ……...1241
Figure G.6 - ARM diagram 5 of 42 ……...1242
Figure G.7 - ARM diagram 6 of 42 ……...1243
Figure G.8 - ARM diagram 7 of 42 ……...1244
Figure G.9 - ARM diagram 8 of 42 ……...1245
Figure G.10 - ARM diagram 9 of 42 ……1246
Figure G.11 - ARM diagram 10 of 42 ……...1247
Figure G.12 - ARM diagram 11 of 42 ……...1248
Figure G.13 - ARM diagram 12 of 42 ……...1249
Figure G.14 - ARM diagram 13 of 42 ……...1250
Figure G.15 - ARM diagram 14 of 42 ……...1251
Figure G.16 - ARM diagram 15 of 42 ……...1252
Figure G.17 - ARM diagram 16 of 42 ……...1253
Figure G.18 - ARM diagram 17 of 42 ……...1254
Figure G.19 - ARM diagram 18 of 42 ……...1255
Figure G.20 - ARM diagram 19 of 42 ……...1256
Figure G.21 - ARM diagram 20 of 42 ……...1257
Figure G.22 - ARM diagram 21 of 42 ……...1258
Figure G.23 - ARM diagram 22 of 42 ……...1259
Figure G.24 - ARM diagram 23 of 42 ……...1260
Figure G.25 - ARM diagram 24 of 42 ……...1261
Figure G.26 - ARM diagram 25 of 42 ……...1262
Figure G.27 - ARM diagram 26 of 42 ……...1263
Figure G.28 - ARM diagram 27 of 42 ……...1264
Figure G.29 - ARM diagram 28 of 42 ……...1265
Figure G.30 - ARM diagram 29 of 42 ……...1266
Figure G.31 - ARM diagram 30 of 42……1267
Figure G.32 - ARM diagram 31 of 42 ……...1268
Figure G.33 - ARM diagram 32 of 42 ……...1269
Figure G.34 - ARM diagram 33 of 42 ……...1270
Figure G.35 - ARM diagram 34 of 42 ……...1271
Figure G.36 - ARM diagram 35 of 42 ……...1272
Figure G.37 - ARM diagram 36 of 42 ……...1273
Figure G.38 - ARM diagram 37 of 42 ……...1274
Figure G.39 - ARM diagram 38 of 42 ……...1275
Figure G.40 - ARM diagram 39 of 42 ……...1276
Figure G.41 - ARM diagram 40 of 42 ……...1277
Figure G.42 - ARM diagram 41 of 42 ……...1278
Figure G.43 - ARM diagram 42 of 42 ……...1279
Figure H.1 - AIM EXPRESS-G diagram 1 of 41 ……..1281
Figure H.2 - AIM EXPRESS-G diagram 2 of 41 ……..1282
Figure H.3 - AIM EXPRESS-G diagram 3 of 41 ……..1283

© ISO 2001 — All rights reserved

Figures cont'd.

Page

Figure H.4 - AIM EXPRESS-G diagram 4 of 41 ……1284
Figure H.5 - AIM EXPRESS-G diagram 5 of 41 ……1285
Figure H.6 - AIM EXPRESS-G diagram 6 of 41 ……1286
Figure H.7 - AIM EXPRESS-G diagram 7 of 41 ……1287
Figure H.8 - AIM EXPRESS-G diagram 8 of 41 ……1288
Figure H.9 - AIM EXPRESS-G diagram 9 of 41 ……1289
Figure H.10 - AIM EXPRESS-G diagram 10 of 41 ……1290
Figure H.11 - AIM EXPRESS-G diagram 11 of 41 ……1291
Figure H.12 - AIM EXPRESS-G diagram 12 of 41 ……1292
Figure H.13 - AIM EXPRESS-G diagram 13 of 41 ……1293
Figure H.14 - AIM EXPRESS-G diagram 14 of 41 ……1294
Figure H.15 - AIM EXPRESS-G diagram 15 of 41 ……1295
Figure H.16 - AIM EXPRESS-G diagram 16 of 41 ……1296
Figure H.17 - AIM EXPRESS-G diagram 17 of 41 ……1297
Figure H.18 - AIM EXPRESS-G diagram 18 of 41 ……1298
Figure H.19 - AIM EXPRESS-G diagram 19 of 41 ……1299
Figure H.20 - AIM EXPRESS-G diagram 20 of 41 ……1300
Figure H.21 - AIM EXPRESS-G diagram 21 of 41 ……1301
Figure H.22 - AIM EXPRESS-G diagram 22 of 41 ……1302
Figure H.23 - AIM EXPRESS-G diagram 23 of 41 ……1303
Figure H.24 - AIM EXPRESS-G diagram 24 of 41 ……1304
Figure H.25 - AIM EXPRESS-G diagram 25 of 41 ……1305
Figure H.26 - AIM EXPRESS-G diagram 26 of 41 ……1306
Figure H.27 - AIM EXPRESS-G diagram 27 of 41 ……1307
Figure H.28 - AIM EXPRESS-G diagram 28 of 41 ……1308
Figure H.29 - AIM EXPRESS-G diagram 29 of 41 ……1309
Figure H.30 - AIM EXPRESS-G diagram 30 of 41 ……1310
Figure H.31 - AIM EXPRESS-G diagram 31 of 41 ……1311
Figure H.32 - AIM EXPRESS-G diagram 32 of 41 ……1312
Figure H.33 - AIM EXPRESS-G diagram 33 of 41 ……1313
Figure H.34 - AIM EXPRESS-G diagram 34 of 41 ……1314
Figure H.35 - AIM EXPRESS-G diagram 35 of 41 ……1315
Figure H.36 - AIM EXPRESS-G diagram 36 of 41 ……1316
Figure H.37 - AIM EXPRESS-G diagram 37 of 41 ……1317
Figure H.38 - AIM EXPRESS-G diagram 38 of 41 ……1318
Figure H.39 - AIM EXPRESS-G diagram 39 of 41 ……1319
Figure H.40 - AIM EXPRESS-G diagram 40 of 41 ……1320
Figure H.41 - AIM EXPRESS-G diagram 41 of 41 ……1321
Figure K.1 - Fragment of measure_schema in EXPRESS-G ……..1330
Figure K.2 - Positioning of shape representations ……1333
Figure K.3 - Known_source for externally defined items ……1335
Figure K.4 - Piping line network ……..1339
Figure L.1 - Relationship between logical connectivity and physical connectivity ……1345

 © ISO 2001 — All rights reserved

Foreword

ISO (International Organization for Standardization) is a worldwide federation of national standards bodies (ISO member bodies). The work of preparing International Standards is normally carried out through ISO technical committees. Each member body interested in a subject for which a technical committee has been established has the right to be represented on that committee. International organizations, governmental and non-governmental, in liaison with ISO, also take part in the work. ISO collaborates closely with the International Electrotechnical Commission (IEC) on all matters of electrotechnical standardization.

International Standards are drafted in accordance with the rules given in the ISO/IEC Directives, Part 3.

Draft International Standards adopted by technical committees are circulated to the member bodies for voting. Publication as an International Standard requires approval by at least 75% of the member bodies casting a vote.

Attention is drawn to the possibility that some of the elements of this part of ISO may be the subject of patent rights. ISO shall not be held responsible for identifying any or all such patent rights.

International Standard ISO 10303-227 was prepared by Technical Committee ISO/TC 184, *Industrial automation systems and integration*, Subcommittee SC4, *Industrial data*.

This second edition of ISO 10303-227 cancels and replaces the first edition (ISO 10303-227:2000), of which it constitutes a technical revision.

This International Standard is organized as a series of parts, each published separately. The structure of this international standard is described in ISO 10303-1.

Each part of this International Standard is a member of one of the following series: description methods, implementation methods, conformance testing methodology and framework, integrated generic resources, integrated application resources, application protocols, abstract test suites, application interpreted constructs, and application modules. This part is a member of the application protocols series.

A complete list of parts of ISO 10303 is available from the Internet:

http://www.nist.gov/sc4/editing/step/titles/

Should further parts of ISO 10303 be published, they will follow the same numbering pattern.

Annexes A, B, C, D, and E form a normative part of this part of ISO 10303. Annexes F, G, H, J, K, L, and M are for information only.

© ISO 2001 — All rights reserved

Introduction

ISO 10303 is an International Standard for the computer-interpretable representation of product information and for the exchange of product data. The objective is to provide a neutral mechanism capable of describing products throughout their life cycle. This mechanism is suitable not only for neutral file exchange, but also as a basis for implementing and sharing product databases, and as a basis for archiving.

This part of ISO 10303 is a member of the application protocol series. This part of ISO 10303 specifies an application protocol (AP) for the exchange of the spatial configuration information of process plants, plant systems and ship systems. This information includes the shape, spatial arrangement and connection characteristics of piping, HVAC (heating, ventilation and air-conditioning) and cableway system components as well as the shape and spatial arrangement characteristics of other related plant systems (e.g., instrumentation and controls, and structural systems). Users of this standard should understand the basic principles and concepts of plant design, and piping, HVAC and cableway system design.

This AP specifies requirements for the exchange of information required for the design, analysis, fabrication and installation of piping components and piping systems and information on the inspection of fabricated piping. This AP specifies requirements for the exchange of information required for the design, analysis and installation of HVAC components and HVAC systems. This AP specifies requirements for the exchange of information required for the design and installation of cableway components and cableway systems. This AP also specifies requirements for the exchange of functional characteristics for HVAC and piping components and systems. The

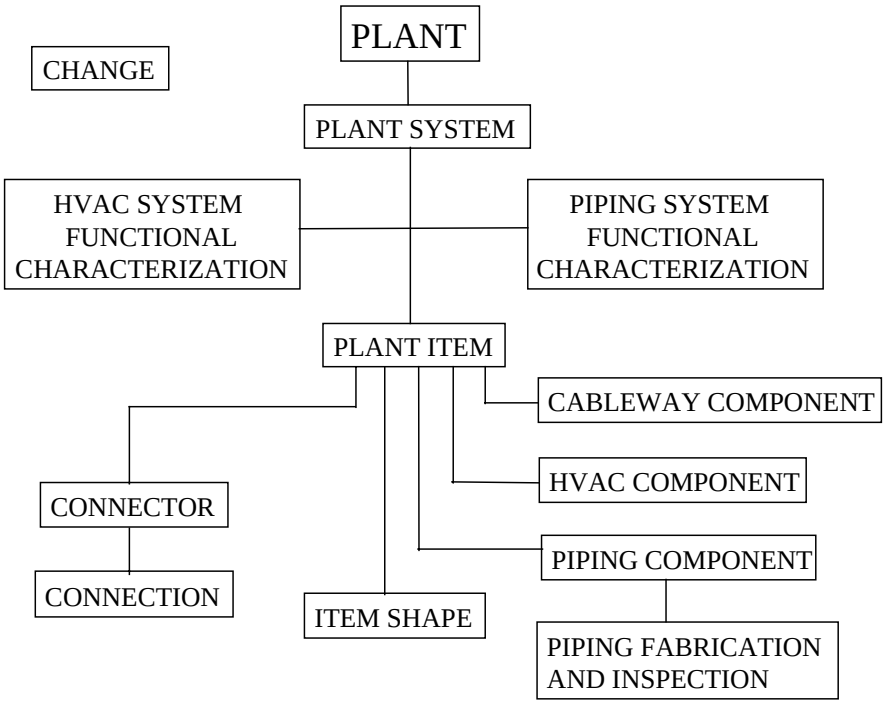

Figure 1 - Data planning model

 © ISO 2001 — All rights reserved

design information for a piping system may specify a pump capable of maintaining a pressure and flow rate. The design may also specify the shape limitations or requirements and the location of the pump in the system, but the design will not include sufficient information for the fabrication of the pump.

Figure 1 contains a data planning model that provides a high level description of the requirements for this application protocol, as well as the relationships between the basic data concepts. The data planning model illustrates that a plant consists of plant systems, plant systems consist of plant items and plant items may be connected to one another using connectors on the plant item. The shape and spatial arrangement of plant items are represented by the item shape. The shape representation may use constructive solid geometry (CSG), solid boundary representation (Brep) geometry, wireframe geometry, or combinations of these. The plant item shape may be represented at various levels of abstraction, from an encompassing envelope to a detailed design description. The data planning model further illustrates that the concept of change is a requirement for this application protocol. Change is applicable to each individual plant item, the relationships between plant items, and to groupings of plant items. It applies to all the concepts noted on the data planning model.

NOTE This part of ISO 10303 may be used in conjunction with ISO 13584 [13] to identify catalogue items and classifications.

This application protocol defines the context, scope, and information requirements for the exchange of design and layout information for a process plant, plant systems, ship systems, system components and equipment between different agents over the life cycle of the facility and specifies the integrated resources necessary to satisfy these requirements. The reasons for exchanging this information include:

— exchange of requirements from an owner to an engineering firm;

— exchange of cableway, HVAC, piping and equipment designs between a design engineer and a system engineer;

— exchange of cableway, HVAC, piping and equipment designs between a design engineer and a fabricator;

— exchange of changes to cableway, HVAC, piping and equipment designs between a design engineer and a system engineer or a fabricator;

— exchange of piping fabrication information, fabricated piping inspection results and installation information between engineering, fabrication and construction firms;

— integration of designs created by different engineers;

— detection of physical interferences of systems and components with components of other systems;

— exchange of cableway, HVAC and piping installation information between engineering and construction firms and with owner organizations;

© ISO 2001 — All rights reserved

— exchange of as-built facility and system configurations among owners, engineering firms and construction firms.

Application protocols provide the basis for developing implementations of ISO 10303 and abstract test suites for the conformance testing of AP implementations.

Clause 1 defines the scope of the application protocol and summarizes the functionality and data covered by the AP. Clause 3 lists the words defined in this part of ISO 10303 and gives pointers to words defined elsewhere. An application activity model that is the basis for the definition of the scope is provided in annex F. The information requirements of the application are specified in clause 4 using terminology appropriate to the application. A graphical representation of the information requirements, referred to as the application reference model, is given in annex G.

Resource constructs are interpreted to meet the information requirements. This interpretation produces the application interpreted model (AIM). This interpretation, given in 5.1, shows the correspondence between the information requirements and the AIM. The short listing of the AIM specifies the interface to the integrated resources and is given in 5.2. Note that the definitions and EXPRESS provided in the integrated resources for constructs used in the AIM may include select list items and subtypes which are not imported into the AIM. The expanded listing given in annex A contains the complete EXPRESS for the AIM without annotation. A graphical representation of the AIM is given in annex H. Additional requirements for specific implementation methods are given in annex C.

 © ISO 2001 — All rights reserved

Industrial automation systems and integration — Product data representation and exchange — Part 227: Application protocol — Plant spatial configuration

1 Scope

This part of ISO 10303 specifies the use of the integrated resources necessary for the scope and information requirements for the exchange of spatial configuration information of process plants, plant systems and ship systems. The spatial configuration information focuses on the shape and spatial arrangement of the components of the systems. The spatial configuration information principally supports the engineering, fabrication and installation life-cycle phases, but may be useful in the downstream life-cycle phases of operations and maintenance. This part accommodates the disciplines of plant design, system design, fabrication, inspection, installation and construction.

NOTE 1 The application activity model in annex F provides a graphical representation of the processes and information flows that are the basis for the definition of the scope of this part of ISO 10303.

NOTE 2 Figure 2 illustrates the basic life-cycle stages of a process plant. Plant life-cycle phases for which AP 227 is useful are enclosed in the rounded rectangles labeled “AP 227 ed2”.

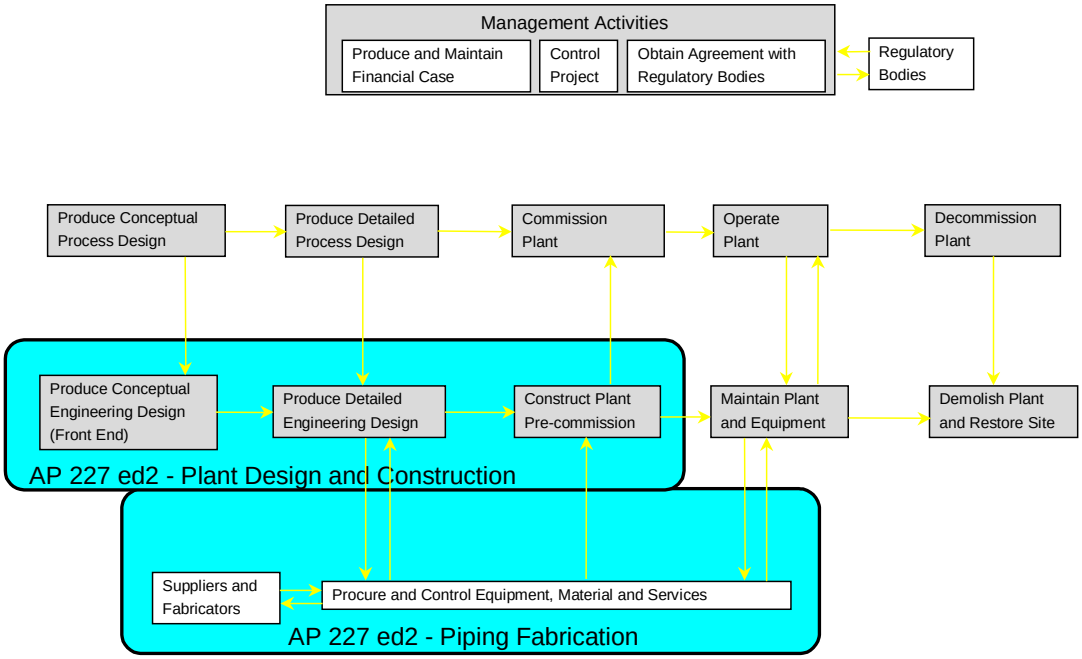

Figure 2 - Process plant life cycle activity coverage

The following are within the scope of this part of ISO 10303:

© ISO 2001 — All rights reserved

— the shape and spatial arrangement of items in systems within a process plant or ship;

— explicit representation of the 3D shape of systems and components;

— explicit representation of the 3D external shape of system components and equipment. The representation may include envelope, outline and detailed representations as well as a parametric representation of the external shape.

— the functional configuration of HVAC and piping systems and the relationship of the functional configurations to the physical system design;

— information required for the design, analysis, fabrication and installation of piping components and piping systems;

— information on the inspection of fabricated piping;

NOTE 3 The functional configuration entails connectivity, sequencing, component size, and schedule, and may include other information, such as equipment tag numbers and requirements to perform consistency checks between the functional and physical representations of the design.

— basic engineering data as needed for spatial layout and configuration of systems;

— references to functional requirements of plant systems, such as stream data and operational characteristics;

— references to or designation of functional characteristics of components and connected equipment as required for system design;

— the identification, shape, location, and orientation of reserved areas, volumes, and space-occupying elements of a plant;

— references to specifications, standards, guidelines, or regulations for the systems, components, or connected equipment that may specify physical characteristics or performance characteristics of the system or component;

EXAMPLE 1 Physical characteristics include material and welding requirements.

EXAMPLE 2 References to standards include ISO 10303-221 [3] and ISO 13584 [13].

— the identification of catalogue information associated with a component;

— the identification of catalogues that contain component definitions;

— status of components and connected equipment and of their spatial arrangement;

NOTE Status labels are used by project management to monitor and control the execution of the project. Labels such as "preliminary", "in-work", and "released for fabrication" are used

 ©ISO 2001 — All rights reserved

to designate the degree of completeness or suitability for further action of the design or layout that the label is applied to.

— connections and connection requirements for cableway, HVAC and piping components and equipment;

— definition of components in sufficient detail to support the acquisition of the components;

— change request approval, notification, and verification, tracking of differences between versions of system information, and tracking of changes to plant items and attributes of plant items;

NOTE Only the specific change information described in this part of ISO 10303 is in scope. The change process itself is not in scope.

— specification of the chemical composition of the streams carried by the piping and HVAC systems in sufficient detail to evaluate the suitability of components for the desired process;

— data exchange;

— external reference to classification systems;

— external reference to standard parts;

— external reference to representations of standard parts.

The following are outside the scope of this part of ISO 10303:

— schematic representations;

EXAMPLE Schematic representations include P&IDs and process flow diagrams (PFDs).

— the contents of specifications, standards, guidelines, or regulations;

— preparation of piping specifications;

— logistics and materials management;

— specification of the chemical composition of the streams carried by the piping system in sufficient detail for process flow design;

— process design and conceptual engineering;

EXAMPLE Process design includes activities such as process material and heat balances, process flow diagram development, and determination of equipment sizes.

— testing, commissioning, handover, maintenance, and disposal of a plant;

©ISO 2001 — All rights reserved

— plant operating procedures;

— commercial aspects of procurement and contracting;

EXAMPLE Commercial aspects include pricing, terms and conditions, and payment schedules.

— information necessary to manage the evolution and growth of data sets through the life-cycle of a product or project other than indications of changes and approvals;

— history data;

— internal design and maintenance of equipment.

 ©ISO 2001 — All rights reserved

2 Normative references

The following normative documents contain provisions which, through reference in this text, constitute provisions of this International Standard. For dated references, subsequent amendments to, or revisions of, any of these publications do not apply. However, parties to agreements based on this International Standard are encouraged to investigate the possibility of applying the most recent editions of the normative documents indicated below. For undated references, the latest edition of the normative document referred to applies. Members of ISO and IEC maintain registers of currently valid International Standards.

ISO/IEC 8824-1:1995, *Information technology — Open systems interconnection — Abstract syntax notation one (ASN.1): Specification of basic notation.*

ISO 10303-1:1994, *Industrial automation systems and integration — Product data representation and exchange — Part 1: Overview and fundamental principles*.

ISO 10303-11:1994/Cor 1:1999, *Industrial automation systems and integration — Product data representation and exchange — Part 11: Description methods: The EXPRESS language reference manual*.

ISO 10303-21:1994/Cor 1:1996, *Industrial automation systems and integration — Product data representation and exchange — Part 21: Implementation methods: Clear text encoding of the exchange structure*.

ISO 10303-31:1994, *Industrial automation systems and integration — Product data representation and exchange — Part 31: Conformance testing methodology and framework: General concepts*.

ISO 10303-41:1994, *Industrial automation systems and integration — Product data representation and exchange — Part 41: Integrated generic resources: Fundamental of product description and support.*

ISO 10303-42:2000, *Industrial automation systems and integration — Product data representation and exchange — Part 42: Integrated generic resources: Geometric and topological representation*.

ISO 10303-43:2000, *Industrial automation systems and integration — Product data representation and exchange — Part 43: Integrated generic resources: Representation structures*.

ISO 10303-44:2000, *Industrial automation systems and integration — Product data representation and exchange — Part 44: Integrated generic resources: Product structure configuration*.

ISO 10303-45:1998, *Industrial automation systems and integration — Product data representation and exchange — Part 45: Integrated generic resources: Materials*.

ISO 10303-46:1994, *Industrial automation systems and integration — Product data representation and exchange — Part 46: Integrated generic resources: Visual presentation*.

ISO 10303-47:1997, *Industrial automation systems and integration — Product data representation and exchange — Part 47: Integrated generic resources: Shape variation*

© ISO 2001 — All rights reserved

tolerances.

ISO 13584-24:1995, *Industrial automation systems and integration — Parts library — Part 24: Logical model of supplier library*.

ISO 13584-42:1995, *Industrial automation systems and integration — Parts library — Part 42: Methodology for structuring part families*.

 © ISO 2001 — All rights reserved

3 Terms, definitions, and abbreviations

3.1 Terms defined in ISO 10303-1

This part of ISO 10303 makes use of the following terms defined in ISO 10303-1:

— abstract test suite (ATS);

— application;

— application activity model (AAM);

— application interpreted model (AIM);

— application protocol (AP);

— application reference model (ARM);

— conformance class;

— implementation method;

— integrated resource;

— product;

— product data;

— protocol information and conformance statement (PICS);

— unit of functionality (UoF).

3.2 Terms defined in ISO 10303-31

This part of ISO 10303 makes use of the following terms defined in ISO 10303-31:

— conformance testing;

— implementation under test (IUT).

3.3 Other definitions

For the purposes of this part of ISO 10303, the following definitions apply:

3.3.1 actual

descriptive adjective that, when applied to an item, indicates that the item exists at some time in the real world. An actual plant item (see **3.3.31**) has properties that can be measured or observed

NOTE 1 The terms actual, planned (see **3.3.31**), and required (see **3.3.41**) loosely reflect life-cycle stages of an item.

© ISO 2001 — All rights reserved

NOTE 2 Within the scope of this part of ISO 10303, being actual can be specified for an item that is:

— a plant item;

— an association between plant items such as a connection;

— an activity or an association between a plant item and an activity;

— a possession of a property by a plant item or activity.

NOTE 3 An item cannot be both actual and planned (see **3.3.31**). An actual item can be the realization of an planned item.

3.3.2 assembly

a set of items that have a relationship to each other apart from being members of the same set

NOTE Within the scope of this part of ISO 10303, an assembly can be items that are plant items (see **3.3.32**).

3.3.3 basic engineering data

parameters and descriptions that specify design (see **3.3.11**) characteristics and boundaries for the plant item (see **3.3.32**) that are required to support piping system (see **3.3.30**) design

EXAMPLE Piping system design parameters and descriptions include design temperature, design pressure, design codes, and weights.

3.3.4 branch

a portion of a piping system (see **3.3.30**) that diverges or divides from the main flow path

NOTE A branch may have a different identifier from that of the main flow path.

3.3.5 catalogue

a collection (see **3.3.6**) of items or an electronic or paper document that contains information about a collection of items

NOTE Within the scope of this part of ISO 10303, a catalogue can be a collection of typical or reference plant items (see **3.3.32**), that the definition of a specific occurrence of a plant item in the design (see **3.3.11**) of a process plant (see **3.3.37**) can be selected from.

3.3.6 collection

a set of things that do not have any relationship to each other apart from being members of the same set

NOTE Within the scope of this part of ISO 10303, a collection can be items that are plant items (see **3.3.32**).

3.3.7 component

 © ISO 2001 — All rights reserved

an item that may be part of another item

NOTE 1 Within the scope of this part of ISO 10303, an item that is a component can be part of a functional (see **3.3.13**) or physical (see **3.3.24**) plant item (see **3.3.32**) or part of a process material (see **3.3.36**) that is a mixture.

NOTE 2 A component can itself have components.

3.3.8 connection

an association between two items that enables the flow of process material (see **3.3.36**), energy, mechanical loads, or signals between them or constrains their relative positions

NOTE 1 Within the scope of this part of ISO 10303, a connection can be between either functional (see **3.3.13**) or physical (see **3.3.24**) plant items (see **3.3.32**).

NOTE 2 A connection can be the result of a physical (see **3.3.24**) joining.

NOTE 3 A functional connection can exist between two plant items (see **3.3.32**) without a physical (see **3.3.24**) joining of the plant items.

3.3.9 connector

a physical (see **3.3.24**) or functional (see **3.3.13**) property of a plant item (see **3.3.32**) that links it to another plant item, or to a compatible connector on another plant item. This linkage enables the flow of energy, mechanical loads, process material (see **3.3.36**), or signals through the connected plant items

3.3.10 construction material

the substance or substances that a physical (**see 3.3.24**) plant item (see **3.3.32**) is made from

3.3.11 design

a representation (see **3.3.40**) of a process plant (see **3.3.37**), portion of a process plant, or plant - item (see **3.3.32**), that is created for a specific purpose and uses a consistent syntax and symbology

NOTE A PFD is a design that represents the flow and reaction of process materials (see **3.3.36**). A P&ID is a design that represents the logical functionality of a piping system (see **3.3.30**). A three-dimensional geometric model is a design that represents the physical (see **3.3.24**) shape and arrangement of the components (see **3.3.7**) of a process plant (see **3.3.37**) or plant system (see **3.3.33**).

3.3.12 equipment

a plant item (see **3.3.32**) that carries out an operation and that is treated as a single item for the purpose of design (see **3.3.11**), acquisition, or operation

NOTE An equipment has both physical (see **3.3.24**) and functional (see **3.3.13**) aspects.

3.3.13 functional

descriptive adjective that, when applied to an item, refers to the actions, activities, or capabilities, that the item provides or may provide to fulfill a purpose

© ISO 2001 — All rights reserved

NOTE In the process plant industry, a plant item (see **3.3.32**) that provides functional capability in a process plant (see **3.3.37**) is typically denoted by a tag number.

3.3.14 functional characteristics
nomenclature, codes, and named values that describe or specify the performance or behaviour of a plant item (see **3.3.32**)

EXAMPLE Functional characteristics include flow rates, operating pressure, and maximum temperature.

3.3.15 functional requirements
nomenclature, codes, and named values that describe or specify the performance or behaviour to be met by a plant item (see **3.3.32**)

3.3.16 instrument
an individually identifiable plant item (see **3.3.32**) or combination of plant items, that is part of a system that monitors or controls a process plant (see **3.3.37**)

EXAMPLE Instruments include items such as control valves, sensors, and gauges.

3.3.17 insulation
a quantity of matter or space that provides resistance to the flow of heat, electricity, sound, or mechanical vibration

3.3.18 line
a logical component (see **3.3.7**) of a piping system (see **3.3.30**) that is composed of a collection (see **3.3.6**) of line segments (see **3.3.19**)

NOTE Further explanation of lines is provided in K.7.

3.3.19 line segment
an element of a line (see **3.3.18**)

NOTE Further explanation of line segments is provided in K.7.

3.3.20 line segment termination
one of two logical end-points of a line segment (see **3.3.19**)

NOTE Lines (see **3.3.18**) are composed of line segments (see **3.3.19**). Line segments are connected through line segment terminations.

3.3.21 line segment termination connection
a logical linkage between two line segments (see **3.3.19**) or between a line segment and a plant item (see **3.3.32**)

3.3.22 material
a quantity of matter

3.3.23 material stream

 © ISO 2001 — All rights reserved

a flow of process material (see **3.3.36**) past a defined point along a path

3.3.24 physical

descriptive adjective that, when applied to an item, refers to a set of characteristics, properties, or traits of the item

EXAMPLE Characteristics include weight, size, and location and orientation of the item.

NOTE In the process plant industry, a physical object that is, or may be, installed as a plant item (see **3.3.32**), and can be identified by a serial number.

3.3.25 pipe

a plant item (see **3.3.32**) that is hollow and approximately cylindrical, that may have a constant cross-section along its extent, and that conveys fluid, vapour, or particulate material (see **3.3.22**)

NOTE Heating, ventilation, and air conditioning (HVAC) duct that has a rectangular cross section is not a pipe.

3.3.26 pipe fitting

a plant item (see **3.3.32**) that is used, or is intended to be used, to join or terminate pipes (see **3.3.25**) or other items in a piping system (see **3.3.30**) or equipment (see **3.3.12**) connectors (see **3.3.9**), or to provide changes of pipe direction or branching within a piping system

3.3.27 piping and instrumentation diagram

a piping and instrumentation diagram schematic representation (see **3.3.40**) that consists, as a minimum, of the functional (see **3.3.13**) connection (see **3.3.8**) and assembly (see **3.3.2**) of plant items (see **3.3.32**), and the identification of principal plant items

NOTE The piping and instrumentation diagram can also present the functional (see **3.3.13**) and physical (see **3.3.24**) aspects of plant items (see **3.3.32**).

3.3.28 piping class

a functional (see **3.3.13**) performance envelope defined by a set or range of common physical (see **3.3.24**) properties, and an identification of the pipes (see **3.3.25**), pipe fittings (see **3.3.26**), and valves that have these properties

EXAMPLE 1 Piping classes include stainless steel, cast iron, and carbon steel.

EXAMPLE 2 Physical properties of a piping class include diameter, pressure, and temperature.

3.3.29 piping specification

a definition of various aspects of a piping system (see **3.3.30**). It is also used to refer to a document or electronic file that contains such a definition

NOTE Piping system (see **3.3.30**) aspects that may be included in a piping specification include design (see **3.3.11**) pressures and temperatures, piping construction materials (see **3.3.10**), pipe wall thicknesses or schedules, types of fittings to be used, types of valves and flanges, valve and flange pressure rating requirements, and fabrication, examination,

© ISO 2001 — All rights reserved

testing, inspection, cleaning, and installation requirements, including the requirements for seismic installations, where applicable.

3.3.30 piping system
a plant system (see **3.3.33**) that performs a transport function, and that is composed primarily of pipes (see **3.3.25**), pipe fittings (see **3.3.26**), and valves subject to the same set or sets of design (see **3.3.11**) conditions

3.3.31 planned
descriptive adjective that, when applied to an item, indicates that an item that has been designed or predicted

NOTE 1 The terms actual (see **3.3.1**), planned (see **3.3.31**), and required (see **3.3.41**) loosely reflect life-cycle stages of an item.

NOTE 2 Within the scope of this part of ISO 10303, being planned can be specified for an item that is:

— a plant item (see **3.3.32**);

— an association between plant items such as a connection (see **3.3.8**);

— an activity or an association between a plant item and an activity;

— a possession of a property by a plant item or activity.

NOTE 3 An item cannot be both actual (see **3.3.1**) and planned. An actual item can be the realization of a planned item.

3.3.32 plant item
a physical (see **3.3.24**) object or volume of space that is, or is intended to be, a part of a process plant (see **3.3.37**). A plant item can be an assembly (see **3.3.2**) of other plant items. A plant item has both physical (see **3.3.24**) and functional (see **3.3.13**) aspects

NOTE If a plant item is a volume of space, it may or may not contain other plant items.

3.3.33 plant system
a part of a process plant (see **3.3.37**) that provides or performs, or is intended to provide or perform, a service or function contributing to, or enabling the operation of, a process plant. A plant system consists of an assembly (see **3.3.2**) of one or more plant items (see **3.3.32**). A plant system has both physical (see **3.3.24**) and functional (see **3.3.13**) aspects

3.3.34 process activity
an activity that transforms or transports process material (see **3.3.36**) between its input to a process plant (see **3.3.37**) as feed stock and its output from a process plant as a product or waste

NOTE The transformation can be a change of physical (see **3.3.24**) state, a physical separation or mixing, or a biological or chemical process.

 © ISO 2001 — All rights reserved

3.3.35 process flow diagram

a schematic representation (see **3.3.40**) that consists, as a minimum, of the connection of process activities (see **3.3.34**) by material streams (see **3.3.23**) and the identification of plant items (see **3.3.32**) that perform the process activities

NOTE 1 The process activities (see **3.3.34**) shown on a process flow diagram can also be called unit operations.

NOTE 2 The process flow diagram can also present:

— properties of process activities (see **3.3.34**) and material streams (see **3.3.23**) for particular cases;

— measurements that are made upon process activities and material streams;

— the flow of signals between sensors, controllers, and actuators;

— the control logic that is implemented by a controller.

3.3.36 process material

the material (see **3.3.22**) that is transformed or transported by a process activity (see **3.3.34**)

3.3.37 process plant

an assembly (see **3.3.2**) of one or more plant systems (see **3.3.33**) and plant items (see **3.3.32**) that can, or is intended to perform, a chemical, physical (see **3.3.24**) or transport process. A process plant is identified as a single unit for the purposes of management and ownership. A process plant has both physical and functional (see **3.3.13**) aspects

3.3.38 range of values

a specification of a value range for a given dimension, parameter, or nominal size, for the purpose of defining a family of plant items (see **3.3.32**)

NOTE This is done by specifying two dimensional values for a given parameter. One dimension has a name with a value of minimum_<parameter name>, such as minimum_-flange_inside_diameter. The other dimension has a name with a value of maximum_-<parameter name>, such as maximum_flange_inside_diameter.

3.3.39 range value

an indication of variation of a dimension, parameter, or nominal size on an actual physical (see **3.3.24**) plant item (see **3.3.32**). A range value is not a toleranced dimension. A range value, like the range of values (see **3.3.38**), has a minimum and maximum value. It does not, however, indicate a family of plant items

NOTE The attributes that use range values in 4.2 are differentiated from those attributes that use range of values (see **3.3.38**) by a explanatory note that follows the attribute definition.

EXAMPLE Insulation (see **3.3.17**) may be described as 6 inches thick, but in reality it may be 5-7 inches thick. Range values permit this to be specified.

© ISO 2001 — All rights reserved

3.3.40 representation
a description, drawing, or depiction of something

3.3.41 required
descriptive adjective that, when applied to an item, indicates that an item is essential or necessary, i.e., it has to be provided to satisfy a functional (see **3.3.13**) need

NOTE 1 The terms actual (see **3.3.1**), planned (see **3.3.31**), and required loosely reflect life-cycle stages of an item.

NOTE 2 Within the scope of this part of ISO 10303, being required can be specified for an item that is:

— a plant item (see **3.3.32**);

— an association between plant items such as a connection (see **3.3.8**);

— an activity or an association between a plant item and an activity;

— a possession of a property by a plant item or activity.

3.3.42 site
an area of land or water that one or more process plants (see **3.3.37**) is or may be situated on

3.3.43 spatial configuration
the location, orientation, and relative position of the components (see **3.3.7**) of a plant system (see **3.3.33**)

3.4 Abbreviations

For the purposes of this part of ISO 10303, the following abbreviations apply:

AAM application activity model

AE architectural engineering

AEC architecture, engineering, and construction

AIC application interpreted construct

AIM application interpreted model

AISC American Institute of Steel Construction

ANSI American National Standards Institute

AP application protocol

 © ISO 2001 — All rights reserved

ARM application reference model

ASTM American Society for Testing and Materials

ATS abstract test suite

Brep boundary representation

BOP bottom of pipe

CAD computer-aided design

CC conformance class

COP centre of pipe

CSG constructive solid geometry

ECN engineering change notice

EPA Environmental Protection Agency

FDA Food and Drug Administration

GIS geographic information system

GUID globally unambiguous identifier

HVAC heating, ventilation, and air conditioning

id identifier

ICOM input, control, output, or mechanism

IEC International Electrotechnical Commission

ISO International Organization for Standardization

OSHA Occupational Safety and Health Administration

PFD process flow diagram

P&ID piping and instrumentation diagram

PICS protocol information and conformance statement

PIEBASE Process Industry Executive for achieving Business Advantage using Standards for data Exchange

PSI pounds per square inch

UoF unit of functionality

© ISO 2001 — All rights reserved

UTM universal transverse mercator

 © ISO 2001 — All rights reserved

4. Information requirements

This clause specifies the information required for the exchange of plant spatial configuration information between application systems.

The information requirements are specified as a set of units of functionality, application objects, and application assertions. These assertions pertain to individual application objects and to relationships between application objects. The information requirements are defined using the terminology of the subject area of this application protocol.

NOTE 1 A graphical representation of the information requirements is given in annex G.

NOTE 2 The information requirements correspond to those of the activities identified as being in the scope of this application protocol in annex F.

NOTE 3 The mapping table specified in 5.1 shows how the integrated resources are used to meet the information requirements of this application protocol. The use of the integrated resources introduces additional requirements that are common to application protocols.

© ISO 2001 — All rights reserved

4.1. Units of functionality

This subclause specifies the UoFs for the plant spatial configuration application protocol. This part of ISO 10303 specifies the following units of functionality:

— cableway_component_characterization UoF;

— change_information UoF;

— connection UoF;

— connector UoF;

— hvac_component_characterization UoF;

— hvac_system_functional_characterization UoF;

— hybrid_shape_representation UoF;

— piping_component_characterization UoF;

— piping_inspection UoF

— piping_system_functional_characterization UoF;

— plant_characterization UoF;

— plant_csg_shape_representation UoF;

— plant_item_characterization UoF;

— shape UoF;

— site_characterization UoF.

The units of functionality and a description of the functions that each UoF supports are given below. The application objects included in the UoFs are defined in 4.2.

4.1.1. cableway_component_characterization UoF

The cableway_component_characterization UoF describes the physical representation of cableway systems and elements. This UoF extends the plant_characterization UoF for characterization of cableway systems and extends the plant_item_characterization UoF for representation of cableway components. The geometry of cableway components is specified using the shape UoF.

The following application objects are used by the cableway_component_characterization UoF:

 © ISO 2001 — All rights reserved

— Cable;

— Cableway_component;

— Cableway_connector;

— Cableway_fitting;

— Cableway_piece;

— Cableway_size_description;

— Conduit;

— Conduit_size_description;

— Raceway;

— Raceway_lane;

— Raceway_size_description.

4.1.2. change_information UoF

The change_information UoF describes information such as the design change requests and approvals for modifications to Plant objects, Plant_item objects, Plant_system objects, and other components associated with the Plant.

The following application objects are used by the change_information UoF:

— Change;

— Change_approval;

— Change_item;

— Change_life_cycle_stage;

— Change_life_cycle_stage_sequence;

— Change_life_cycle_stage_usage;

— Changed_line_assignment;

— Changed_line_branch_connection;

— Changed_line_plant_item_branch_connection;

— Changed_line_plant_item_connection;

— Changed_line_to_line_connection;

© ISO 2001 — All rights reserved

— Changed_piping_specification;

— Changed_piping_system_line;

— Changed_piping_system_line_segment;

— Changed_piping_system_line_segment_termination;

— Changed_planned_physical_plant;

— Changed_plant;

— Changed_plant_item;

— Changed_plant_item_collection;

— Changed_plant_item_connection;

— Changed_plant_item_connector;

— Changed_plant_item_location;

— Changed_plant_item_shape;

— Changed_plant_process_capability;

— Changed_plant_system;

— Changed_reference_geometry;

— Changed_required_material_description;

— Changed_site;

— Changed_site_feature;

— Changed_sited_plant;

— Changed_sub_plant_relationship.

4.1.3. connection UoF

The connection UoF describes the physical linkage or connectivity between Plant_item objects. Plant_item objects have connectors. Two connectors of a compatible type are attached to form a connection. The sequence of connections establishes the physical connectivity of items within Plant_system objects.

The following application objects are used by the connection UoF:

— Connection_definition;

 © ISO 2001 — All rights reserved

— Electricity_transference;

— Flexible_connection;

— Fluid_transference;

— Functional_connection_definition_satisfaction;

— Functional_connection_occurrence_satisfaction;

— Load_transference;

— Locked_orientation_connection;

— Plant_item_connection;

— Plant_item_connection_occurrence.

4.1.4. connector UoF

The connector UoF is the information about the part of a Plant_item that is intended to interconnect with another Plant_item. This UoF describes the physical features of Plant_item objects that are designed to connect or mate with a similar physical feature on another Plant_item object.

The following application objects are used by the connector UoF:

— Branch_hole;

— Buttweld;

— Catalogue_connector;

— Clamped;

— Connector_definition;

— Cross_section_flat_oval;

— Cross_section_non_standard;

— Cross_section_radiused_corner;

— Cross_section_rectangular;

— Cross_section_round;

— Cross_section_triangular;

— Electrical_connector;

— Female_end;

© ISO 2001 — All rights reserved

— Flanged;

— Flanged_end;

— Flared_end;

— Functional_connector;

— Functional_connector_definition_satisfaction;

— Functional_connector_occurrence_satisfaction;

— Grooved_end;

— Hvac_branch_connection;

— Hvac_connector;

— Hvac_connector_service_characteristic;

— Hvac_cross_section;

— Hvac_plant_item_branch_connector;

— Hvac_plant_item_connector;

— Male_end;

— Node;

— Physical_connector;

— Piping_connector;

— Piping_connector_service_characteristic;

— Plant_item_connector;

— Plant_item_connector_occurrence;

— Pressure_fit;

— Service_operating_case;

— Socket;

— Structural_load_connector;

— Stub_in;

— Threaded.

 © ISO 2001 — All rights reserved

4.1.5. hvac_component_characterization UoF

The hvac_component_characterization UoF describes the physical representation of HVAC systems and elements. This UoF extends the plant_item_characterization UoF for representation of Hvac_component objects. The geometry of Hvac_component objects is specified using the shape UoF.

The following application objects are used by the hvac_component_characterization UoF:

— Hvac_access_opening;

— Hvac_bend;

— Hvac_component;

— Hvac_component_thickness;

— Hvac_coupling;

— Hvac_elbow_90deg_reducing;

— Hvac_elbow_centred;

— Hvac_elbow_mitre;

— Hvac_end_fitting;

— Hvac_equipment;

— Hvac_fitting;

— Hvac_flow_control_device;

— Hvac_gasket;

— Hvac_instrument;

— Hvac_offset_centred;

— Hvac_offset_ogee_centred;

— Hvac_takeoff;

— Hvac_transition;

— Hvac_transition_slanted;

— Splitter.

© ISO 2001 — All rights reserved

4.1.6. hvac_system_functional_characterization UoF

The hvac_system_functional_characterization UoF describes the functional representation of HVAC systems and elements. It extends the plant_characterization UoF.

The following application objects are used by the hvac_system_functional_characterization UoF:

— Hvac_plant_item_branch_connection;

— Hvac_plant_item_connection;

— Hvac_plant_item_termination;

— Hvac_section_branch_termination;

— Hvac_section_segment;

— Hvac_section_segment_insulation;

— Hvac_section_segment_termination;

— Hvac_section_termination;

— Hvac_section_to_section_connection;

— Hvac_section_to_section_termination;

— Hvac_specification;

— Hvac_system_section.

4.1.7. hybrid_shape_representation UoF

The hybrid_shape UoF specifies the representation of Plant_item shapes using Brep geometry and topology.

The following application objects are used by the hybrid_shape UoF:

— B_rep_element;

— Conic;

— Curve;

— Free_form_curve;

— Line;

— Point;

— Polygon;

 © ISO 2001 — All rights reserved

— Surface;

— Vector;

— Wire_and_surface_element.

4.1.8. piping_component_characterization UoF

The piping_component_characterization UoF describes the individual elements of the Piping_-system within a Plant. Piping_component objects include pipes, fittings, valves, in-line equipment, and other elements that regulate, control, or convey Piping_system fluids.

The following application objects are used by the piping_component_characterization UoF:

— Base_elbow_support;

— Base_line_support;

— Blank;

— Blind_flange;

— Boss;

— Bushing;

— Cap;

— Compound_bend_pipe;

— Coupling;

— Cross;

— Dummy_leg;

— Eccentric_base_elbow_support;

— Eccentric_reducer;

— Elbow;

— Expander_flange;

— Family_definition;

— Ferrule;

— Fitting;

— Flange;

© ISO 2001 — All rights reserved

— Gasket;

— Gusset;

— Inline_equipment;

— Inline_instrument;

— Insert;

— Inside_and_thickness;

— Lap_joint_flange;

— Lap_joint_stub_end;

— Lateral;

— Lined_piping;

— Lug;

— Mitre_bend_pipe;

— Nipple;

— Olet;

— Orifice_flange;

— Orifice_plate;

— Outside_and_thickness;

— Paddle_blank;

— Paddle_spacer;

— Perforated_plate;

— Pipe;

— Pipe_closure;

— Piping_component;

— Piping_size_description;

— Piping_spool;

— Piping_support;

 © ISO 2001 — All rights reserved

— Plate;

— Plug;

— Pressure_class;

— Reducer;

— Reducing_flange;

— Reinforcing_component;

— Reinforcing_plate;

— Ring_spacer;

— Schedule;

— Shoe;

— Slip_on_flange;

— Slip_on_jacket_flange;

— Socket_weld_flange;

— Spacer;

— Specialty_item;

— Spectacle_blind;

— Stay;

— Stopper;

— Straight_pipe;

— Swept_bend_pipe;

— Tee;

— Threaded_flange;

— Union;

— Valve;

— Weld_neck_flange;

— Weld_neck_jacket_flange;

— Y_type_lateral.

© ISO 2001 — All rights reserved

4.1.9. piping_inspection UoF

The piping_inspection UoF describes inspection information and inspection documentation for Piping_component objects and Piping_spool objects.

The following application objects are used by the hvac_component_characterization UoF:

— Connection_inspection_record;

— Inspection_condition;

— Piping_component_inspection_record;

— Piping_spool_inspection_record;

— Shape_inspection_record.

4.1.10. piping_system_functional_characterization UoF

The piping_system_functional_characterization UoF describes the functional connectivity of a Piping_system and the functional connectivity among Plant_item objects in that system. This UoF provides the information that describes the functional links and properties of a flow stream in a Piping_system. It includes information about the segments in the line and the specifications for these segments, such as design criteria, service conditions, and line identifier.

The following application objects are used by the piping_system_functional_characterization UoF:

— Line_branch_connection;

— Line_branch_termination;

— Line_piping_system_component_assignment;

— Line_plant_item_branch_connection;

— Line_plant_item_branch_connector;

— Line_plant_item_connection;

— Line_plant_item_connector;

— Line_plant_item_termination;

— Line_to_line_connection;

— Line_to_line_termination;

— Piping_specification;

 © ISO 2001 — All rights reserved

— Piping_system_line;

— Piping_system_line_segment;

— Piping_system_line_segment_termination;

— Piping_system_line_termination;

— Segment_insulation;

— Stream_design_case;

— Stream_phase.

4.1.11. plant_characterization UoF

The plant_characterization UoF describes identifiable collections of Plant_item objects that perform specific functions within a plant. The Plant_item objects are functionally dependent on one another for the performance of the system and are interrelated through physical connections. The collection of Plant_system objects as a whole enables the Plant to operate.

The following application objects are used by the plant_characterization UoF:

— Cableway_system;

— Ducting_system;

— Electrical_system;

— External_classification;

— Functional_plant;

— Functional_plant_satisfaction;

— Hvac_system;

— Instrumentation_and_control_system;

— Line_less_piping_system;

— Location_in_plant;

— Manufacturing_line;

— Piping_system;

— Planned_physical_plant;

— Plant;

© ISO 2001 — All rights reserved

— Plant_process_capability;

— Plant_system;

— Plant_system_assembly;

— Structural_system;

— Sub_plant_relationship;

— Train;

— Unit.

4.1.12. plant_csg_shape_representation UoF

The plant_csg_shape UoF specifies the representation of Plant_item shapes using CSG primitives.

The following application objects are used by the plant_csg_shape UoF:

— Block;

— Circular_ellipsoid;

— Cone;

— Csg_element;

— Cylinder;

— Eccentric_cone;

— Eccentric_cylinder;

— Eccentric_pyramid;

— Extrusion;

— Faceted_brep;

— Hemisphere;

— Pyramid;

— Reducing_torus;

— Solid_of_revolution;

— Sphere;

 © ISO 2001 — All rights reserved

— Square_to_round;

— Torus;

— Trimmed_block;

— Trimmed_cone;

— Trimmed_cylinder;

— Trimmed_pyramid;

— Trimmed_sphere;

— Trimmed_torus.

4.1.13. plant_item_characterization UoF

The plant_item_characterization UoF describes major elements that Plant objects and Plant_-system objects are comprised of. These are items within a Plant that occupy space and possess physical, measurable characteristics. This UoF specifies spatial and physical information about Piping_system_component objects and Equipment, but only spatial characteristics of components of other Plant_system objects, such as hvac and instrumentation.

This UoF describes the information and options associated with the specification of the substance or substances that a Plant_item is composed of. It also describes specification and catalogue information concerning piping components.

This UoF describes the spatial shape and position of volumes of space in a Plant.

NOTE 1 Physical plant_items are things that can be touched.

NOTE 2 As used in this part of ISO 10303, material does not refer to the products that flow within plant systems.

The following application objects are used by the plant_item_characterization UoF:

— Analysis_data_point;

— Bolt;

— Bolt_and_nut_component;

— Bolt_and_nut_set;

— Cable_support;

— Catalogue_definition;

— Catalogue_item;

— Catalogue_item_substitute;

© ISO 2001 — All rights reserved

— Clamp;

— Clamp_set;

— Connected_collection;

— Connection_component;

— Connection_material;

— Design_project;

— Document;

— Ducting_component;

— Electrical_component;

— Equipment;

— Equipment_breaching;

— Equipment_trim_piping;

— Externally_defined_document;

— Externally_defined_user_defined_attribute_value;

— Functional_design_view;

— Functional_plant_item_satisfaction;

— Hexagon_head_bolt;

— Hierarchically_organized_collection;

— Hvac_ducting;

— Installed_physical_design_view;

— Instrument;

— Instrumentation_and_control_component;

— Insulation;

— Material_specification_selection;

— Material_specification_subset_reference;

— Nozzle;

 © ISO 2001 — All rights reserved

— Nut;

— Offline_instrument;

— Physical_design_view;

— Piping_assembly;

— Piping_assembly_assignment;

— Piping_system_component;

— Plain_washer;

— Planned_physical_plant_item;

— Plant_item;

— Plant_item_collection;

— Plant_item_definition;

— Plant_item_design_view;

— Plant_item_instance;

— Plant_item_location;

— Plant_item_weight;

— Plant_volume;

— Process_ducting;

— Project_design_assignment;

— Relative_item_location;

— Required_material_description;

— Reserved_space;

— Route;

— Spare_plant_item_usage;

— Spring_washer;

— Structural_component;

— Stud_bolt;

— Supplied_equipment;

© ISO 2001 — All rights reserved

— Supplier;

— Support_component;

— Support_constraints;

— Support_usage;

— Support_usage_connection;

— System_space;

— Toothed_lock_washer;

— Trunnion;

— User_defined_attribute_value;

— Washer.

4.1.14. shape UoF

The shape UoF specifies the external shapes of components, assemblies of components, and volumes of a Plant. The external shape of a component can be specified as an envelope of the space occupied by a component, as an outline of the component, or as a detailed definition of the shape of a component.

The following application objects are used by the shape UoF:

— Detail_shape;

— Envelope_shape;

— Hybrid_shape_representation;

— Interfering_shape_element;

— Outline_shape;

— Plant_csg_shape_representation;

— Plant_item_centreline;

— Plant_item_interference;

— Plant_item_interference_status;

— Plant_item_shape;

— Reference_geometry;

 © ISO 2001 — All rights reserved

— Shape_interference_zone_usage;

— Shape_parameter;

— Shape_representation;

— Shape_representation_element;

— Shape_representation_element_usage.

4.1.15. site_characterization UoF

The site_characterization UoF describes the significant features of the Site where the Plant is located. It includes information about the site location, infrastructure like roads and sewers, buildings, and other structures located on the Site, and the shape of the terrain where a Building or Site_feature is located.

The following application objects are used by the site_characterization UoF:

— Breakline;

— Building;

— Facet_trigon;

— Faceted_surface_representation;

— Gis_position;

— Location_in_building;

— Location_in_site;

— Point_and_line_representation;

— Site;

— Site_feature;

— Site_shape_representation;

— Sited_plant;

— Survey_point.

© ISO 2001 — All rights reserved

4.2. Application objects

This subclause specifies the application objects for the plant spatial configuration application protocol. Each application object is an atomic element that embodies a unique application concept and contains attributes specifying the data elements of the object. The application objects and their definitions are given below.

Each application object attribute need not be present unless the attribute is specifically identified as required for an application object.

4.2.1. Analysis_data_point

An Analysis_data_point is an identifiable point in space that has a relationship to some Plant_item (see **4.2.260**). Analysis_data_point serves as an anchor for contexts external to this part of ISO 10303 allowing information from these external contexts to reference data that is within the scope and format specified in this part of ISO 10303.

The data associated with an Analysis_data_point are the following:

— id;

— name;

— location.

4.2.1.1 id

The id specifies a unique identifier for the Analysis_data_point.

4.2.1.2 name

The name specifies a textual label given to the Analysis_data_point.

4.2.1.3 location

The location specifies the relative position of the Analysis_data_point within the Plant (see **4.2.258**). This location need not be within the envelope of the Plant_item (see **4.2.260**) with which this Analysis_data_point is associated.

4.2.2. B_rep_element

A B_rep_element is a type of Shape_representation_element (see **4.2.310**) that is composed of geometric and topological elements.

NOTE A B_rep_element need not represent a solid shape.

 © ISO 2001 — All rights reserved

4.2.3. Base_elbow_support

A Base_elbow_support is a Piping_support (see **4.2.248**) that is attached to a corner of bent part. The main body of the Base_elbow_support is a pipe with a base plate that is attached at the foot of the main body of the support. The Base_elbow_support is placed vertically and supports the weight of the piping assembly at the base plate.

NOTE Figure 3 depicts a non-adjustable and an adjustable Base_elbow_support.

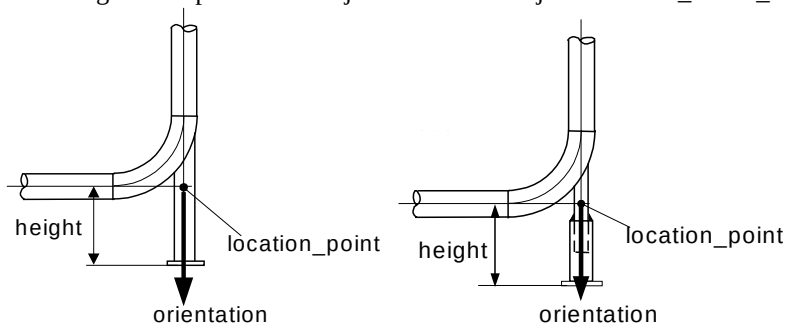

non-adjustable **adjustable**

Figure 3 - Base_elbow_support

The data associated with a Base_elbow_support are the following:

— height;

— adjustability.

4.2.3.1 height

The height is the distance between the supporting face of the base plate of Base_elbow_support and the location_point.

4.2.3.2 adjustability

The adjustability specifies a designation that classifies a Base_elbow_support based on variability of its height. The value of adjustability shall be one of the following:

— adjustable;

— non adjustable.

4.2.4. Base_line _support

A Base_line_support is a type of Piping_support (see **4.2.248**) that is attached to a horizontal pipe. The main body of the Base_line_support is usually a pipe, but shape steel or plate is occasionally used as the material of the support. The base plate is attached at the foot of the main body of the Base_line_support. The Base_line_support is placed vertically and supports the weight of the piping assembly to which it is attached at the base plate.

NOTE Figure 4 depicts a typical Base_line_support.

© ISO 2001 — All rights reserved

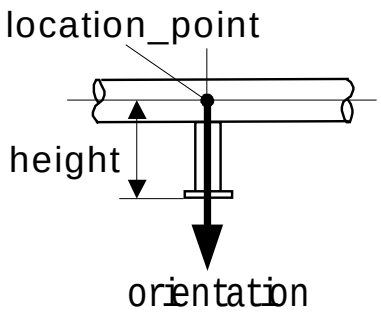

Figure 4 - Base_line_support

The data associated with a Base_line_support are the following:

— height;

— spring.

4.2.4.1 height

The height specifies the distance between the supporting face of the base plate of the Base_line_support and the location_point.

4.2.4.2 spring

The spring specifies whether the Base_line_support contains a spring. The value of spring is one of the following:

— with_spring;

— without_spring.

4.2.5. Blank

A Blank is a type of Fitting (see **4.2.117**) that is placed between two Flange (see **4.2.119**) objects to block the flow of material between the pipelines on either side of the Blank. Each Blank may be one of the following: a Paddle_blank (see **4.2.230**) or a Spectacle_blind (see **4.2.325**).

The data associated with a Blank are the following:

— outside_diameter;

— thickness.

 © ISO 2001 — All rights reserved

4.2.5.1 outside_diameter

The outside_diameter specifies the external diameter of the Blank. It may be specified as a single value or as a range of values.

NOTE See annex L for a discussion of attributes that may be assigned a single value or a range of values.

4.2.5.2 thickness

The thickness specifies the distance between the two faces of the Blank. It may be specified as a single value or as a range of values.

NOTE See annex L for a discussion of attributes that may be assigned a single value or a range of values.

4.2.6. Blind_flange

A Blind_flange is a type of Flange (see **4.2.119**) that is used to block material flow at a flanged connection.

NOTE Figure 5 depicts a typical Blind_flange.

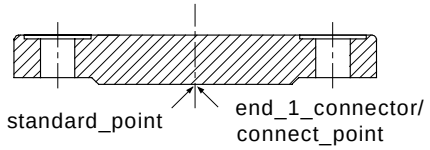

Figure 5 - Blind_flange

4.2.7. Block

A Block is a type of Csg_element (see **4.2.84**) that is a 3D right rectangular solid.

NOTE The size and shape of a Block is described by three real values representing the dimensions of the Block.

4.2.8. Bolt

A Bolt is a type of Bolt_and_nut_component (see **4.2.9**) that is used to fasten two or more Plant_items (see **4.2.260**) together. The Bolt is a rod with a hexagonal, square or round head at one end and a screw thread on the other, or with screw threads on both ends.

The data associated with a Bolt are the following:

© ISO 2001 — All rights reserved

— bolt_type.

The bolt_type specifies a classification of the Bolt based on its shape characteristics.

EXAMPLE Examples of bolt_type designations include hexagon_head, and stud.

4.2.9. Bolt_and_nut_component

A Bolt_and_nut_component is a type of Connection_component (see **4.2.71**) that is a constituent element of a Bolt_and_nut_set (see **4.2.10**). Each Bolt_and_nut_component may be one of the following: a Bolt (see **4.2.8**), a Nut (see **4.2.223**), or a Washer (see **4.2.369**).

The data associated with a Bolt_and_nut_component are the following:

— nominal_size;

— quantity.

4.2.9.1 nominal_size

The nominal_size specifies a standard size designation of the Bolt_and_nut_component. It may be specified as a single value or as a range of values.

NOTE 1 The nominal size need not represent an actual dimension.

NOTE 2 See annex L for a discussion of attributes that may be assigned a single value or a range of values.

4.2.9.2 quantity

The quantity specifies the number of Bolt_and_nut_components used in a Bolt_and_nut_set (see **4.2.10**).

4.2.10. Bolt_and_nut_set

A Bolt_and_nut_set is a Connection_material (see **4.2.74**) that consists of Bolt_and_nut_components (see **4.2.9**) and the Bolt_and_nut_set shall contain at least one Bolt_and_nut_component such as a Bolt(see **4.2.8**), a Nut (see **4.2.223**), or a Washer(see **4.2.369**). The Bolt_and_nut_set is used to connect Piping_components (see **4.2.240**).

The data associated with a Bolt_and_nut_set are the following:

— set_id;

— quantity_used.

4.2.10.1 set_id

The set_id specifies a unique identifier for the Bolt_and_nut_set. The set_id is required for each Bolt_and_nut_set.

4.2.10.2 quantity_used

 © ISO 2001 — All rights reserved

The quantity_used specifies the number of Bolt_and_nut_sets used at a Plant_item_connection (see **4.2.263**).

4.2.11. Boss

A Boss is an Olet (see **4.2.225**) that is welded onto a pipe perpendicular to the straight run of the pipe. The Boss consists of a counter-bored shape with a Socket (see **4.2.319**) on the outside.

NOTE Figure 6 depicts a typical Boss with two different welding types.

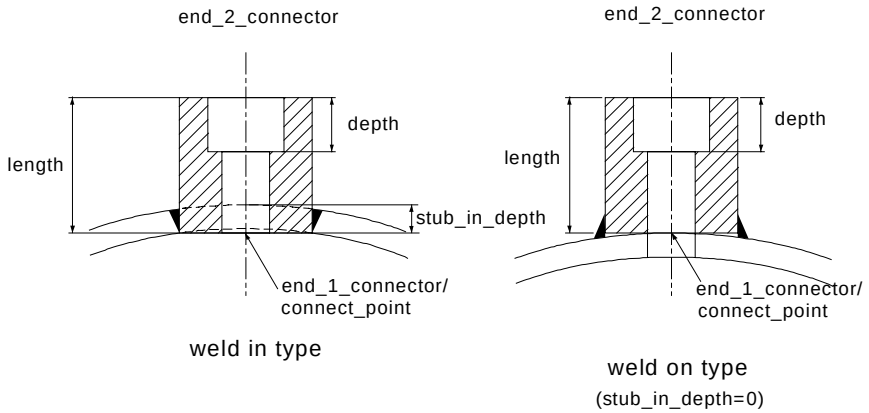

Figure 6 - Boss

The data associated with a Boss are the following:

— depth.

The depth specifies the distance from the outer face of the end_2_connector to the bottom of the socket. It may be specified as a single value or as a range of values.

NOTE See annex L for a discussion of attributes that may be assigned a single value or a range of values.

4.2.12. Branch_hole

A Branch_hole is a type of Piping_connector (see **4.2.242**) end type that is a hole cut in a pipe for a branch connection.

NOTE A Branch_hole is not typically a design feature of the pipe, but rather is added after the fact to create a branch from the pipe. The hole may be used for stub-in connections, olets, or nipples can be welded or screwed to it.

The data associated with a Branch_hole are the following:

— diameter;

— stub_in_depth.

4.2.12.1 diameter

The diameter specifies the diameter value of the Branch_hole. It may be specified as a single value or as a range of values.

© ISO 2001 — All rights reserved

NOTE See annex L for a discussion of attributes that may be assigned a single value or a range of values.

4.2.12.2 stub_in_depth

The stub_in_depth specifies the distance from the end of a stubbed-in Piping_component (see **4.2.240**) to the point where the centreline of the stubbed-in Piping_component intersects the outer surface of the other Piping_component. It may be specified as a single value or as a range of values.

NOTE 1 See annex L for a discussion of attributes that may be assigned a single value or a range of values.

NOTE 2 The attribute for stub_in_depth will only be used when the Piping_component (see **4.2.240**) participates in a connection.

4.2.13. Breakline

A Breakline is a contiguous set of straight line segments that designate a path across a Site_shape_representation (see **4.2.315**).

NOTE The path is a constraint on the mathematical interpolation of the surface of the terrain.

4.2.14. Building

A Building is a partially or totally enclosed structure located on a Site (see **4.2.313**) that contains Plant_system (see **4.2.276**) objects or provides supporting infrastructure within its boundaries. The z-axis of the local coordinate system of the Building shall be considered the elevation of the coordinate space.

The data associated with a Building are the following:

— building_id;

— location_and_orientation;

— name;

— shape.

4.2.14.1 building_id

The building_id specifies a unique number used to identify the building. Building_id is required for each Building.

4.2.14.2 location_and_orientation

The location_and_orientation specifies the position of the Building relative to the site coordinate system and the orientation of the Building relative to a specified direction.

EXAMPLE E5704.35', N5912.87' are coordinates. They can be used to locate a known point in the Building (e.g., centrelines of column row 1A).

 © ISO 2001 — All rights reserved

4.2.14.3 name

The name specifies a textual label given to the Building.

4.2.14.4 shape

The shape specifies the outline or characteristic surface configuration or contour of the building.

4.2.15. Bushing

A Bushing is a type of Fitting (see **4.2.117**) with one external and one smaller internal end.

NOTE Figure 7 depicts a typical threaded hexagon Bushing. It is typically used to connect a smaller Pipe (see**4.2.236**) to a larger Fitting or Nozzle.

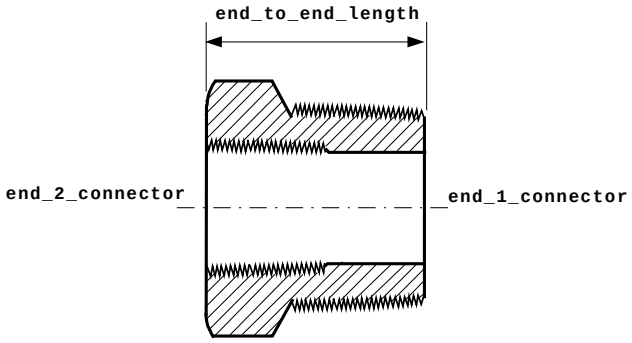

Figure 7 - Bushing

The data associated with a Bushing are the following:

— end_1_connector;

— end_2_connector;

— end_to_end_length.

4.2.15.1 end_1_connector

The end_1_connector specifies the Piping_connector (see **4.2.242**) Male_end (see **4.2.215**).

4.2.15.2 end_2_connector

The end_2_connector specifies the Piping_connector (see **4.2.242**) Female_end (see **4.2.116**).

4.2.15.3 end_to_end_length

The end_to_end_length specifies the external length of the Bushing from the end-one face to the end-two face. It may be specified as a single value or as a range of values.

© ISO 2001 — All rights reserved

NOTE See annex L for a discussion of attributes that may be assigned a single value or a range of values.

4.2.16. Buttweld

A Buttweld is a type of Piping_connector (see **4.2.242**) that consists of the welding of two Piping_component (see **4.2.240**) objects where they are aligned edge to edge.

The data associated with a Buttweld are the following:

— root_gap.

The root_gap specifies the distance between the end faces of two Piping_components (see **4.2.240**) that are butewlded. It may be specified as a single value or as a range of values.

NOTE 1 See annex L for a discussion of attributes that may be assigned a single value or a range of values.

NOTE 2 The attribute for root_gap will only be used when the Piping_component (see **4.2.240**) participates in a connection.

4.2.17. Cable

A Cable is a group of one or more electrical conductors bound together to follow the same path through space, and insulated from each other.

EXAMPLE Multi-conductor power cables, bus bars, twisted-pair ethernet cables, fiber-optic cables, telephone cables, hook-up wire.

4.2.18. Cable_support

A Cable_support is a type of Support_component (see **4.2.343**) that provides support to Electrical_component (see **4.2.99**) objects.

The data associated with a Cable_support are the following:

— cable_support_type.

The cable_support_type specifies a description of the category of Cable_support.

4.2.19. Cableway_component

A Cableway_component is a type of Plant_item (see **4.2.260**) that is a part of a Cableway_system (see **4.2.24**). Each Cableway_component may be a Cableway_piece (see **4.2.22**), a Cableway_fitting (see **4.2.21**), or a Raceway_lane (see **4.2.290**).

4.2.20. Cableway_connector

 © ISO 2001 — All rights reserved

A Cableway_connector is a type of Plant_item_connector (see **4.2.265**) that establishes a link between two Cableway_component (see **4.2.19**) objects.

The data associated with a Cableway_connector are the following:

— type.

The type specifies the kind of Cableway_connector.

4.2.21. Cableway_fitting

A Cableway_fitting is a type of Cableway_component (see **4.2.19**) that joins or fits two other Cableway_components (see **4.2.19**) together.

4.2.22. Cableway_piece

A Cableway_piece is a type of Cableway_component (see **4.2.19**) that has one or more channels through which Cable (see **4.2.17**) objects may be run. Each Cableway_piece is either a Raceway (see **4.2.289**) or a Conduit (see **4.2.66**).

4.2.23. Cableway_size_description

A Cableway_size_description is used to explain or summarize the physical size of a Cableway_component (see **4.2.19**) or Cableway_connector (see **4.2.20**), based on a set of dimensional characteristics. Each Cableway_size_description is either a Raceway_size_description (see **4.2.291**) or a Conduit_size_description (see **4.2.67**).

The data associated with a Cableway_size_description are the following:

— fill_area.

The fill_area specifies the cross-sectional area of the usable portion of the cavity within a Cableway_component (see **4.2.19**) that is available to be filled with Cable (see **4.2.17**) objects.

4.2.24. Cableway_system

A Cableway_system is a type of Plant_system (see **4.2.276**) that is a system of interconnected Cableway_component (see **4.2.19**) objects form a series of channels to hold Cable (see **4.2.17**) objects.

4.2.25. Cap

A Cap is a type of Pipe_closure (see **4.2.237**) which closes the end of the pipe.

NOTE Figure 8 depicts a typical welded round Cap.

© ISO 2001 — All rights reserved

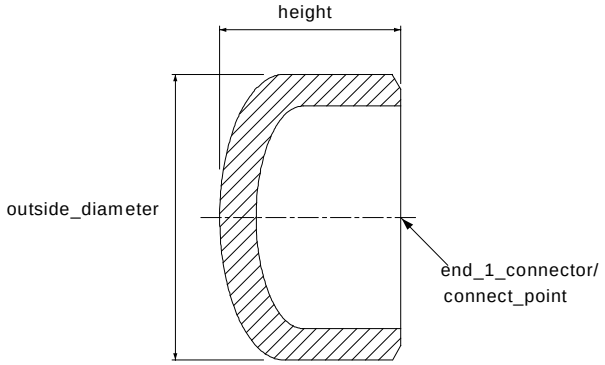

Figure 8 - Cap

The data associated with a Cap are the following:

— height.

The height is the distance between the end and the top of the Cap.

4.2.26. Catalogue_connector

A Catalogue_connector is the definition or the reference of a Connector_definition (see **4.2.75**). A Connector_definition may appear in a catalogue, or the properties of a Connector_definition may be drawn from a catalogue.

NOTE A Catalogue_connector is analogous to a Catalogue_item (see **4.2.28**) in that both have standardized characteristics.

4.2.27. Catalogue_definition

A Catalogue_definition is the identification of a document that lists Catalogue_item (see **4.2.28**) objects.

NOTE 1 Catalogue_definition may reference either an electronic or printed catalogue.

NOTE 2 A Catalogue_definition may be defined by ISO 13584 [13]. ISO 13584 will be considered a normative reference when it has reached the DIS level.

The data associated with a Catalogue_definition are the following:

— catalogue_id;

— catalogue_name;

— catalogue_version.

4.2.27.1 catalogue_id

The catalogue_id specifies a unique identifier given to a catalogue. Catalogue_id is required for each Catalogue_definition.

 © ISO 2001 — All rights reserved

4.2.27.2 catalogue_name

The catalogue_name specifies a textual label given to the catalogue.

4.2.27.3 catalogue_version

The catalogue_version specifies a particular release of a catalogue within a sequence of catalogue releases.

4.2.28. Catalogue_item

A Catalogue_item is an item whose characteristics are standardized and have been categorized in a library or catalogue. A Catalogue_item that is defined by a Plant_item_definition (see **4.2.267**) must be defined by a Plant_item_definition in which the Plant_item (see **4.2.260**) is defined as a Physical_design_view (see **4.2.235**).

The data associated with a Catalogue_item are the following:

— item_name;

— item_version;

— model_number.

4.2.28.1 item_name

The item_name specifies a textual label that is used by the supplier to refer to the Catalogue_item.

4.2.28.2 item_version

The item_version specifies a particular release of a Catalogue_item within a sequence of Catalogue_item releases.

NOTE This attribute accommodates the possibility of revision pages to a supplier catalogue.

4.2.28.3 model_number

The model_number is the identifier assigned by the supplier to one or more Catalogue_item objects.

4.2.29. Catalogue_item_substitute

A Catalogue_item_substitute is an alternate Catalogue_item (see **4.2.28**) that can be used instead of the specified Catalogue_item.

4.2.30. Change

A Change is the modification or requested modification of a Plant_item (see **4.2.260**).

NOTE A Change may be a request to make a change or an approved change.

© ISO 2001 — All rights reserved

The data associated with a Change are the following:

— business_unit;

— change_id;

— change_reason;

— change_summary;

— date;

— project_number;

— revision;

— title.

4.2.30.1 business_unit

The business_unit specifies the organization(s), company(s), or functional group(s) responsible for the Change.

4.2.30.2 change_id

The change_id specifies a unique identifier for the Change.

4.2.30.3 change_reason

The change_reason specifies the rationale for the Change.

4.2.30.4 change_summary

The change_summary specifies a general description of the Change.

4.2.30.5 date

The date specifies the calendar day-month-year and time that the Change was initiated on.

NOTE A specific ordering of the day, month, and year within the date is not required.

4.2.30.6 project_number

The project_number specifies a designation assigned to identify projects within an organization. More than one project (and therefore more than one project_number) may be associated with a Change.

EXAMPLE Identification of a project_number is used to allow tracking of items such as costs and job hours associated with a Change.

NOTE A project_number may or may not be the same as the designation of a Design_project (see **4.2.87**).

 © ISO 2001 — All rights reserved

4.2.30.7 revision

The revision specifies the particular amendment of the Change within a sequence of amendments.

4.2.30.8 title

The title specifies a descriptive label for the Change.

4.2.31. Change_approval

A Change_approval is the endorsement by an authority of the change in status of a specific Change (see **4.2.30**).

The data associated with a Change_approval are the following:

— approval_date;

— approver;

— approver_role.

4.2.31.1 approval_date

The approval_date specifies the specific calendar day-month-year and time when the approval authority signed the Change as approved.

NOTE A specific ordering of the day, month, and year within the date is not required.

4.2.31.2 approver

The approver specifies the name of the individual who endorsed the Change.

4.2.31.3 approver_role

The approver_role specifies the purpose or function of the approver that approves a change.

4.2.32. Change_item

A Change_item is an item that may be modified, for which there is a request to modify, or is the result of a modification to a Change_item. Each Change_item is either: a Changed_line_-assignment (see **4.2.36**), a Changed_line_branch_connection (see **4.2.37**), a Changed_line_plant_item_branch_connection (see **4.2.38**), a Changed_line_plant_item_-connection (see **4.2.39**), a Changed_line_to_line_connection (see **4.2.40**), a Changed_piping_-system_line (see **4.2.42**), a Changed_piping_system_line_segment (see **4.2.43**), a Changed_piping_system_line_segment_termination (see **4.2.44**), a Changed_planned_physical_-plant (see **4.2.45**), a Changed_plant (see **4.2.46**), a Changed_plant_item (see **4.2.47**), a Changed_plant_item_collection (see **4.2.48**), a Changed_plant_item_connection (see **4.2.49**), a Changed_plant_item_connector (see **4.2.50**), a Changed_plant_item_shape (see **4.2.52**), a Changed_plant_process_capability (see **4.2.53**), a Changed_plant_system (see **4.2.54**), a Changed_reference_geometry (see **4.2.55**), a Changed_required_material_description (see **4.2.56**), a Changed_sited_plant (see **4.2.59**), or a Changed_sub_plant_relationship (see **4.2.60**).

© ISO 2001 — All rights reserved

The data associated with a Change_item are the following:

— creation_date;

— description;

— from_or_to;

— item_owner;

— supersedence_status.

4.2.32.1 creation_date

The creation_date specifies the calendar day-month-year and time that the Change_item is created on.

NOTE A specific ordering of the day, month, and year within the date is not required.

4.2.32.2 description

The description specifies a textual explanation or summary of the item being changed.

4.2.32.3 from_or_to

The from_or_to specifies whether the Change_item object is to be interpreted as the successor or predecessor in a change. The from_or_to shall have one of the following values:

— from;
— to.

4.2.32.3.1 from

from specifies that the Change_item is the predecessor in a change relationship.

4.2.32.3.2 to

to specifies that the Change_item is the successor in a change relationship.

4.2.32.4 item_owner

The item_owner specifies the name of the person or organization that owns the item being changed and is responsible for implementing or approving the change.

4.2.32.5 supersedence_status

The status specifies the textual description of the existence condition of a Change_item.

EXAMPLE Examples of Change_item status include Current, Superseded, and Deleted.

 © ISO 2001 — All rights reserved

4.2.33. Change_life_cycle_stage

A Change_life_cycle_stage is a state in the life cycle of the change that indicates or classifies the status or disposition of the change.

The data associated with a Change_life_cycle_stage are the following:

— name.

The name specifies a textual label given to the stage.

EXAMPLE Examples of names include requested, pending, and implemented.

4.2.34. Change_life_cycle_stage_sequence

A Change_life_cycle_stage_sequence is the mechanism that specifies the sequence of life-cycle stages.

4.2.35. Change_life_cycle_stage_usage

A Change_life_cycle_stage_usage is the assignment of a Change (see **4.2.30**) to a particular Change_life_cycle_stage (see **4.2.33**).

The data associated with a Change_life_cycle_stage_usage are the following:

— date_of_activation;

— date_of_completion;

— description.

4.2.35.1 date_of_activation

The date_of_activation specifies the calendar day-month-year and time when the Change was assigned to the Change_life_cycle_stage. A specific ordering of the day, month, and year within the date is not required.

4.2.35.2 date_of_completion

The date_of_completion specifies the calendar day-month-year and time when the Change was released from, or completed, the assigned life_cycle stage.

4.2.35.3 description

The description specifies a textual explanation or summary of the assignment of the Change to a particular stage.

4.2.36. Changed_line_assignment

© ISO 2001 — All rights reserved

A Changed_line_assignment is a type of Change_item (see **4.2.32**) that identifies a Line_piping_system_component_assignment (see **4.2.200**) that is being changed or is the result of a Change (see **4.2.30**).

4.2.37. Changed_line_branch_connection

A Changed_line_branch_connection is a type of Change_item (see **4.2.32**) that identifies a Line_branch_connection (see **4.2.197**) that is being changed or is the result of a Change (see **4.2.30**).

4.2.38. Changed_line_plant_item_branch_connection

A Changed_line_plant_item_branch_connection is a type of Change_item (see **4.2.32**) that identifies a Line_plant_item_branch_connection (see **4.2.201**) that is being changed or is the result of a Change (see **4.2.30**).

4.2.39. Changed_line_plant_item_connection

A Changed_line_plant_item_connection is a type of Change_item (see **4.2.32**) that identifies a Line_plant_item_connection (see **4.2.203**) that is being changed or is the result of a Change (see **4.2.30**).

4.2.40. Changed_line_to_line_connection

A Changed_line_to_line_connection is a type of Change_item (see **4.2.32**) that identifies a Line_to_line_connection (see **4.2.206**) that is being changed or is the result of a Change (see **4.2.30**).

4.2.41. Changed_piping_specification

A Changed_piping_specification is a type of Change_item (see **4.2.32**) that identifies a Piping_specification (see **4.2.245**) that is being changed or is the result of a Change (see **4.2.30**).

4.2.42. Changed_piping_system_line

A Changed_piping_system_line is a type of Change_item (see **4.2.32**) that identifies a Piping_system_line (see **4.2.251**) that is being changed or is the result of a Change (see **4.2.30**).

4.2.43. Changed_piping_system_line_segment

A Changed_piping_system_line_segment is a type of Change_item (see **4.2.32**) that identifies a Piping_system_line_segment (see **4.2.252**) that is being changed or is the result of a Change (see **4.2.30**).

4.2.44. Changed_piping_system_line_segment_termination

 © ISO 2001 — All rights reserved

A Changed_piping_system_line_segment_termination is a type of Change_item (see **4.2.32**) that identifies a Piping_system_line_segment_termination (see **4.2.253**) that is being changed or is the result of a Change (see **4.2.30**).

4.2.45. Changed_planned_physical_plant

A Changed_planned_physical_plant is a type of Change_item (see **4.2.32**) that identifies a Planned_physical_plant (see **4.2.256**) that is being changed or is the result of a Change (see **4.2.30**).

4.2.46. Changed_plant

A Changed_plant is a type of Change_item (see **4.2.32**) that identifies a Plant (see **4.2.258**) that is being changed or is the result of a Change (see **4.2.30**).

4.2.47. Changed_plant_item

A Changed_plant_item is a type of Change_item (see **4.2.32**) that identifies a Plant_item (see **4.2.260**) that is being changed or is the result of a Change (see **4.2.30**).

4.2.48. Changed_plant_item_collection

A Changed_plant_item_collection is a type of Change_item (see **4.2.32**) that identifies a Plant_item_collection (see **4.2.262**) that is being changed or is the result of a Change (see **4.2.30**).

4.2.49. Changed_plant_item_connection

A Changed_plant_item_connection is a type of Change_item (see **4.2.32**) that identifies a Plant_item_connection (see **4.2.263**) that is being changed or is the result of a Change (see **4.2.30**).

4.2.50. Changed_plant_item_connector

A Changed_plant_item_connector is a type of Change_item (see **4.2.32**) that identifies a Plant_item_connector (see **4.2.265**) that is being changed or is the result of a Change (see **4.2.30**).

4.2.51. Changed_plant_item_location

A Changed_plant_item_location is a type of Change_item (see **4.2.32**) that identifies a Plant_item_location (see **4.2.272**) that is being changed or is the result of a Change (see **4.2.30**).

4.2.52. Changed_plant_item_shape

A Changed_plant_item_shape is a type of Change_item (see **4.2.32**) that identifies a Plant_item_shape (see **4.2.273**) that is being changed or is the result of a Change (see **4.2.30**).

4.2.53. Changed_plant_process_capability

© ISO 2001 — All rights reserved

A Changed_plant_process_capability is a type of Change_item (see **4.2.32**) that identifies a Plant_process_capability (see **4.2.275**) that is being changed or is the result of a Change (see **4.2.30**).

4.2.54. Changed_plant_system

A Changed_plant_system is a type of Change_item (see **4.2.32**) that identifies a Plant_system (see **4.2.276**) that is being changed or is the result of a Change (see **4.2.30**).

4.2.55. Changed_reference_geometry

A Changed_reference_geometry is a type of Change_item (see **4.2.32**) that identifies a Reference_geometry (see **4.2.295**) that is being changed or is the result of a Change (see **4.2.30**).

4.2.56. Changed_required_material_description

A Changed_required_material_description is a type of Change_item (see **4.2.32**) that identifies a Required_material_description (see **4.2.299**) that is being changed or is the result of a Change (see **4.2.30**).

4.2.57. Changed_site

A Changed_site is a type of Change_item (see **4.2.32**) that identifies a Site (see **4.2.313**) that is being changed or is the result of a Change (see **4.2.30**).

4.2.58. Changed_site_feature

A Changed_site_feature is a type of Change_item (see **4.2.32**) that identifies a Site_feature (see **4.2.314**) that is being changed or is the result of a Change (see **4.2.30**).

4.2.59. Changed_sited_plant

A Changed_sited_plant is a type of Change_item (see **4.2.32**) that identifies a Sited_plant (see **4.2.316**) that is being changed or is the result of a Change (see **4.2.30**).

4.2.60. Changed_sub_plant_relationship

A Changed_sub_plant_relationship is a type of Change_item (see **4.2.32**) that identifies a Sub_plant_relationship (see **4.2.340**) that is being changed or is the result of a Change (see **4.2.30**).

4.2.61. Circular_ellipsoid

A Circular_ellipsoid is a type of Csg_element (see **4.2.84**) that has the following geometric characteristics: it is axial symmetric; cross sections taken in a plane normal to the axis result are circular; cross sections taken in plane containing the axis are elliptical; it is trimmed with a plane that is normal to an axis.

 © ISO 2001 — All rights reserved

NOTE The shape of a Circular_ellipsoid may be described as a hemisphere that has been compressed along the circular axis.

4.2.62. Clamp

A Clamp is a set of devices used to join, grip, support, or compress mechanical or structural parts with opposing, often adjustable sides or parts for use in suspending pipe or for fastening hose to an end of pipe or fitting.

NOTE Figure 9 depicts a typical Pipe Clamp.

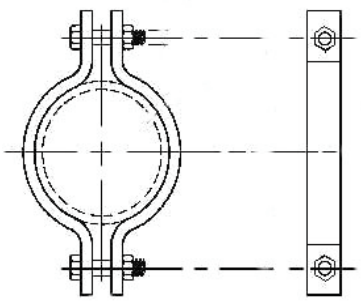

Figure 9 - Pipe Clamp

4.2.63. Clamped

A Clamped is a type of Piping_connector (see **4.2.242**) that is a physical feature of a Plant_item (see **4.2.260**) at which a Pipe Clamp (see **4.2.62**) is attached.

4.2.64. Clamp_set

A Clamp_set is the collection of fasteners and items to be fully used with a Clamp (see **4.2.62**).

The data associated with a Clamp_set are the following:

— set_id;

— quantity.

4.2.64.1 set_id

The set_id specifies a unique identifier for the Clamp_set. The set_id is required for each Clamp_set.

4.2.64.2 quantity

The quantity is the number of items in the Clamp_set.

© ISO 2001 — All rights reserved

4.2.65. Compound_bend_pipe

A Compound_bend_pipe is a type of Pipe (see **4.2.236**) that is comprised of one or more of the following items grouped together and treated as a single Piping_component (see **4.2.240**).

— Straight_pipe (see **4.2.332**)
— Swept_bend_pipe (see **4.2.349**)
— Mitre_bend_pipe (see **4.2.219**)

The Compound_bend_pipe shall include at least one Swept_bend_pipe or Mitre_bend_pipe.

The relationship between the Compound_bend_pipe and its constituents shall be established using Connected_collection (see **4.2.70**).

NOTE Figure 10 depicts a typical Compund_bend_pipe.

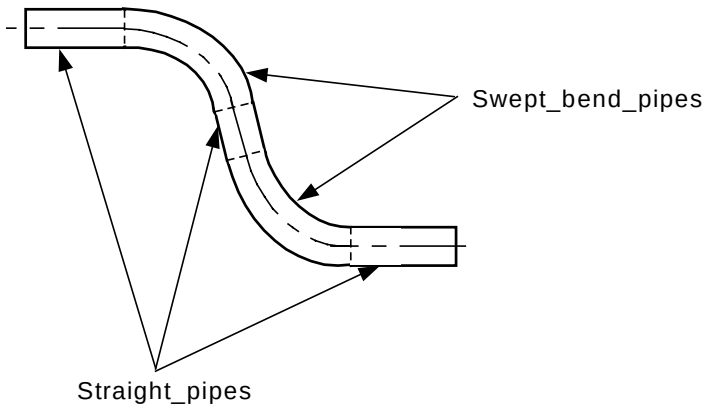

Figure 10 - Compound_bend_pipe

4.2.66. Conduit

A Conduit is a type of Cableway_piece (see **4.2.22**) that is a tube with a round cross section that holds Cable (see **4.2.17**) objects.

EXAMPLE Liquid-tight conduit, flexible conduit, rigid steel conduit, intermediate steel conduit, electrical metallic tubing, power concrete encased duct bank use conduit, rigid heavy wall conduit, rigid extra-heavy wall conduit.

4.2.67. Conduit_size_description

A Conduit_size_description is a type of Cableway_size_description (see **4.2.23**) that is used to explain or summarize the physical size of a Conduit (see **4.2.66**) based on a set of dimensional characteristics.

The data associated with a Conduit_size_description are the following:

— outer_diameter;

— inner_diameter;

— thickness.

 © ISO 2001 — All rights reserved

4.2.67.1 outer_diameter

The outer_diameter specifies the external diameter of the Conduit (see **4.2.66**). It may be specified as a single value or as a range of values.

NOTE See annex L for a discussion of attributes that may be assigned a single value or a range of values.

4.2.67.2 inner_diameter

The inner_diameter specifies the diameter of the opening of the Conduit (see **4.2.66**). It may be specified as a single value or as a range of values.

NOTE See annex L for a discussion of attributes that may be assigned a single value or a range of values.

4.2.67.3 thickness

The thickness specifies the width of the wall of the Conduit (see **4.2.66**). It may be specified as a single value or as a range of values.

NOTE See annex L for a discussion of attributes that may be assigned a single value or a range of values.

4.2.68. Cone

A Cone is a type of Csg_element (see **4.2.84**) that is a 3D volume with parallel, coaxial, circular cross-sections of radii that varies uniformly from a circular base to an axis normal to and positioned at the centre point of the base.

4.2.69. Conic

A Conic is a type of Curve (see **4.2.85**) composed of points located at a uniform distance from a point, a pair of points, or a point and a line.

EXAMPLE Kinds of Conics include circles, ellipses, parabolas, and hyperbolas.

4.2.70. Connected_collection

A Connected_collection is a type of Plant_item_collection (see **4.2.262**) where elements of the whole collection must be connected.

NOTE These connections may be identified explicitly by Plant_item_connection (see **4.2.263**) objects.

EXAMPLE A set of Plant_item (see **4.2.260**) objects can be collected for the purpose of defining the items that comprise an assembly. Examples of this assembly include packaged unit and module in a plant.

4.2.71. Connection_component

A Connection_component is a Plant_item (see **4.2.260**) that is used for the purpose of connecting other Plant_items.

4.2.72. Connection_definition

© ISO 2001 — All rights reserved

A Connection_definition is a type of Plant_item_connection (see **4.2.263**) that specifies connection comprised of two or more connectors that is part of a Plant_item_definition (see **4.2.267**).

NOTE A Connection_definition that is part of a Plant_item_definition (see **4.2.267**) implies that the Plant_item_definition is a Connected_collection (see **4.2.70**).

4.2.73. Connection_inspection_record

A Connection_inspection_record is a collection of information that captures the result of an evaluation of an observed value for a characteristic of a connection against an expected or prescribed value for that characteristic, as well as information to evaluate the acceptability of the observed value.

The data associated with a Connection_inspection_record are the following:

— inspected_property_name;

— connection_type;

— inspection _type;

— weld_id;

— connecting_portion_id;

— inspected_property_tolerance;

— inspected_property_measured_value.

4.2.73.1 inspected_property_name

The inspected_property_name specifies the characteristic for which information is being recorded. The inspected_property_name may be one of the following:

For welded connections:

— fit up;
— drift diameter tolerance;
— welding procedure;
— weld dimension;
— welding person;
— nde;
— heat treatment;
— hardness test;

For flanged connections:

— fit up;
— gasket type;

 © ISO 2001 — All rights reserved

— gasket thickness ;
— gasket compressed thickness;
— bolt and nut tightening torque.

For threaded connections:

— fit up;
— gasket type;
— gasket thickness;
— gasket compressed thickness;
— threaded tightening torque.

4.2.73.2 connection_type

The connection_type specifies the kind of connection that is being inspected. The connection_type may be one of the following:

— buttweld;
— slip on;
— socket;
— stub in;
— threaded;
— flanged.

4.2.73.3 inspection_type

The inspection_type specifies the kind of inspection that is being performed. The inspection_type may be one of the following:

— pt;
— mt;
— ut;
— rt;
— visual examination.

4.2.73.4 weld_id

The weld_id is an identification of the weld point at which the inspection is being made.

4.2.73.5 connecting_portion_id

The connecting_portion_id specifies a descriptive identification of the area of the connection that is being inspected.

EXAMPLE For a welded slip on flange connection, two connecting portions may be defined – the inner portion where the end of the pipe is welded to the inner surface of the fitting, and the outside portion where the end of the fitting is welded to the outside of the pipe.

4.2.73.6 inspected_property_tolerance

The inspected_property_tolerance specifies the acceptable deviation for the measured result of the inspection.

© ISO 2001 — All rights reserved

4.2.73.7 inspected_property_measured_value

The inspected_property_measured_value specifies the recorded result of the inspection.

4.2.74. Connection_material

The Connection_material specifies the substances or other Plant_item (see **4.2.260**) objects used at the connection of two Plant_item_connector (see **4.2.265**) objects. This may be one or more specifications and one or more Plant_item objects.

EXAMPLE At a connection of two butt-weld connectors, there is a welding specification that applies to the connection. At a connection of two flanged connectors there are bolts and nuts that connect the Flanges (see **4.2.119**), as well as a specification for the use of these items.

The data associated with a Connection_material are the following:

— material_name.

The material_name specifies common nomenclature used to refer to the material.

4.2.75. Connector_definition

A Connector_definition is a type of Plant_item_connector (see **4.2.265**) that identifies the connector where a non-instantiated Plant_item (see **4.2.260**) can connect to one or more other Plant_item_connector objects.

4.2.76. Coupling

A Coupling is a type of Fitting (see **4.2.117**) that is used to make a linear connection between two pipes.

NOTE Figure 11 depicts a typical socket-weld Coupling.

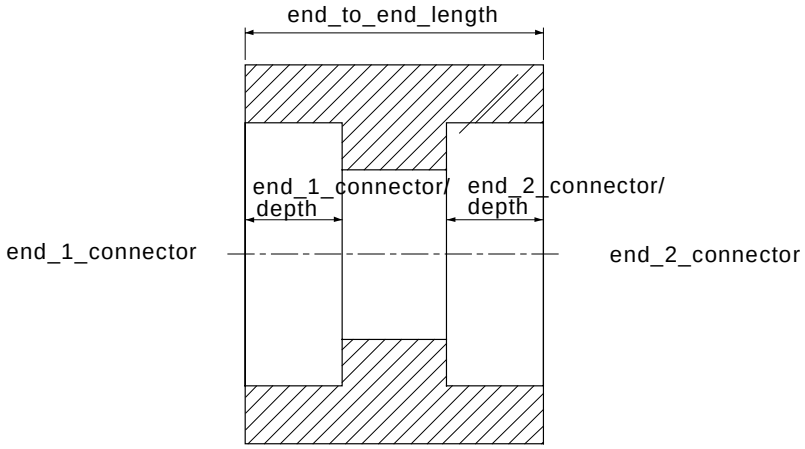

Figure 11- Socket weld Coupling

The data associated with a Coupling are the following:

 © ISO 2001 — All rights reserved

— end_1_connector;

— end_2_connector;

— end_to_end_length.

4.2.76.1 end_1_connector

The end_1_connector specifies the Piping_connector (see **4.2.242**) designated as end one.

4.2.76.2 end_2_connector

The end_2_connector specifies the Piping_connector (see **4.2.242**) designated as end two.

4.2.76.3 end_to_end_length

The end_to_end_length specifies the external distance between the end-one and end-two faces. It may be specified as a single value or as a range of values.

NOTE See annex L for a discussion of attributes that may be assigned a single value or a range of values.

4.2.77. Cross

A Cross is a type of Fitting (see **4.2.117**) that is a branched outlet consisting of four perpendicular legs to provide straight through and 90 degree flow.

NOTE Figure 12 depicts a typical butt-weld Cross.

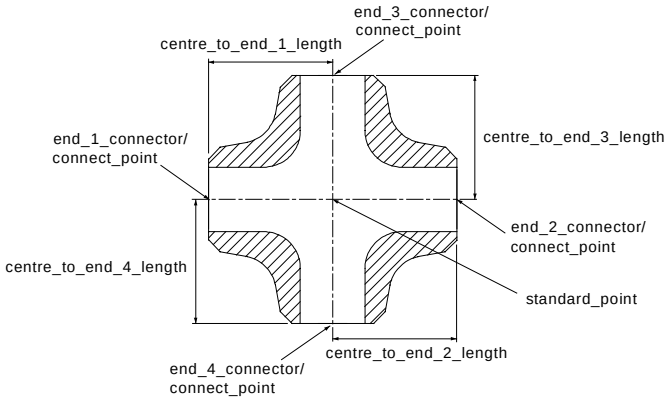

Figure 12 - Butt-weld Cross

The data associated with a Cross are the following:

— centre_to_end_1_length;

— centre_to_end_2_length;

— centre_to_end_3_length;

— centre_to_end_4_length;

— end_1_connector;

© ISO 2001 — All rights reserved

— end_2_connector;

— end_3_connector;

— end_4_connector.

4.2.77.1 centre_to_end_1_length

The centre_to_end_1_length specifies the distance from the intersection of the cross straight-run centreline and branch-run centreline to the end-one (straight-run) face. It may be specified as a single value or as a range of values.

NOTE See annex L for a discussion of attributes that may be assigned a single value or a range of values.

4.2.77.2 centre_to_end_2_length

The centre_to_end_2_length specifies the distance from the intersection of the cross straight-run centreline and branch-run centreline to the end-two (straight-run) face. It may be specified as a single value or as a range of values.

NOTE See annex L for a discussion of attributes that may be assigned a single value or a range of values.

4.2.77.3 centre_to_end_3_length

The centre_to_end_3_length specifies the distance from the intersection of the cross straight-run centreline and branch-run centreline to the end-three (branch-run) face. It may be specified as a single value or as a range of values.

NOTE See annex L for a discussion of attributes that may be assigned a single value or a range of values.

4.2.77.4 centre_to_end_4_length

The centre_to_end_4_length specifies the distance from the intersection of the cross straight-run centreline and branch-run centreline to the end-four (branch-run) face. It may be specified as a single value or as a range of values.

NOTE See annex L for a discussion of attributes that may be assigned a single value or a range of values.

4.2.77.5 end_1_connector

The end_1_connector specifies the Piping_connector (see **4.2.242**) designated as end one.

4.2.77.6 end_2_connector

The end_2_connector specifies the Piping_connector (see **4.2.242**) designated as end two.

4.2.77.7 end_3_connector

The end_3_connector specifies the Piping_connector (see **4.2.242**) designated as end three.

4.2.77.8 end_4_connector

 © ISO 2001 — All rights reserved

The end_4_connector specifies the Piping_connector (see **4.2.242**) designated as end four.

4.2.78. Cross_section_flat_oval

A Cross_section_flat_oval is a type of Hvac_cross_section (see **4.2.150**).

NOTE Figure 13 depicts a typical Cross_section_flat_oval.

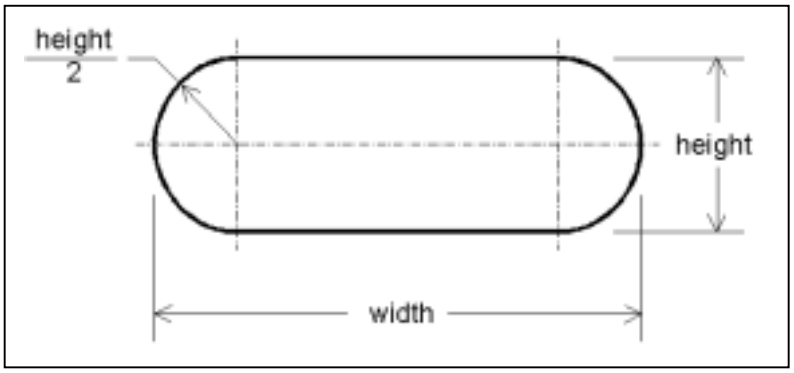

Figure 13 - Cross_section_flat_oval

The data associated with a Cross_section_flat_oval are the following:

— height;

— width.

4.2.78.1 height

This attribute specifies the distance between the flats as shown in Figure 13.

4.2.78.2 width

This attribute specifies the distance between the outside of the rounds as shown in Figure 13.

4.2.79. Cross_section_non_standard

The Cross_section_non_standard is a type of Hvac_cross_section (see **4.2.150**) which cannot be defined by a set of common parameters and therefore requires explicit geometry to define the shape of the cross section.

The data associated with a Cross_section_non_standard are the following:

— cross_section_boundary.

A cross_section_boundary is a curve made up of several component curves but joined together to act as a single curve. The component curves are usually bounded by other surface intersections.

4.2.80. Cross_section_radiused_corner

The Cross_section_radiused_corner is a type of Hvac_cross_section (see **4.2.150**) taken through a piece of rectangular duct whose corners are radiused.

© ISO 2001 — All rights reserved

NOTE Figure 14 depicts a typical Cross_section_radiused_corner.

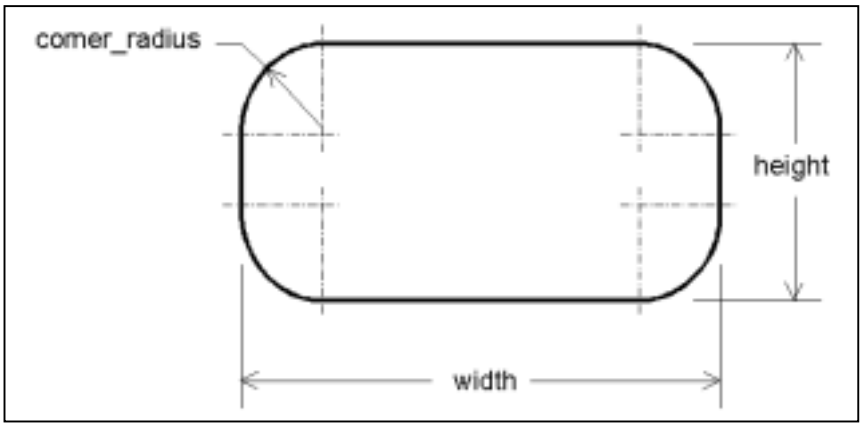

Figure 14 - Cross_section_radiused_corner

The data associated with a Cross_section_radiused_corner are the following:

— height;

— width;

— corner_radius.

4.2.80.1 height

This attribute specifies the distance between the horizontal flats as shown in Figure 14.

4.2.80.2 width

This attribute specifies the distance between the vertical flats as shown in Figure 14.

4.2.80.3 corner_radius

This attribute specifies the radius of the fillet between a vertical face and a horizontal face.

4.2.81. Cross_section_rectangular

The Cross_section_rectangular is a type of Hvac_cross_section (see **4.2.150**) applied to the cross section taken through a piece of rectangular duct in an hvac system.

The data associated with a Cross_section_rectangular are the following:

— height;

— width.

4.2.81.1 height

This attribute specifies the distance between the horizontal flats.

4.2.81.2 width

This attribute specifies the distance between the vertical flats.

 © ISO 2001 — All rights reserved

4.2.82. Cross_section_round

The Cross_section_round is a type of Hvac_cross_section (see **4.2.150**) which is applied to the cross section taken through a piece of round duct in an hvac system.

The data associated with a Cross_section_round are the following:

— radius.

This attribute specifies the distance from the centre of the cross section to a point on its circuference.

4.2.83. Cross_section_triangular

The Cross_section_triangular is a type of Hvac_cross_section (see **4.2.150**) applied to the cross section taken through a piece of triangular duct in an hvac system.

The data associated with a Cross_section_triangular are the following:

— vertex_1;

— vertex_2;

— vertex_3.

4.2.83.1 vertex_1

Vertex_1 is a cartesian point which locates on of the three verticies of the triangular cross section. Vertex_1 is required for each Cross_section_triangular.

4.2.83.2 vertex_2

Vertex_2 is a cartesian point which locates on of the three verticies of the triangular cross section. Vertex_2 is required for each Cross_section_triangular.

4.2.83.3 vertex_3

Vertex_3 is a cartesian point which locates on of the three verticies of the triangular cross section. Vertex_3 is required for each Cross_section_triangular.

4.2.84. Csg_element

A Csg_element is a type of Shape_representation_element (see **4.2.310**) that is a regular, 3D geometric shape that is combined with other regular shapes through boolean operations to create a complex, 3D, solid model. Each Csg_element is either: a Block (see **4.2.7**), a Circular_ellipsoid (see **4.2.61**), a Cone (see **4.2.68**), a Cylinder (see **4.2.86**),an Eccentric_cone (see **4.2.94**), an Eccentric_cylinder (see **4.2.95**), an Eccentric_pyramid (see **4.2.96**), an Extrusion (see **4.2.111**), a Faceted_brep (see **4.2.113**), a Hemisphere (see **4.2.139**), a Pyramid (see **4.2.288**), a Reducing_-torus (see **4.2.294**), a Solid_of_revolution (see **4.2.321**), a Sphere (see **4.2.326**), a Square_to_-round (see **4.2.329**), a Torus (see **4.2.355**), a Trimmed_block (see **4.2.357**), a Trimmed_cone (see **4.2.358**), a Trimmed_cylinder (see **4.2.359**), a Trimmed_pyramid (see **4.2.360**), a Trimmed_-sphere (see **4.2.361**), a Trimmed_torus (see **4.2.362**).

4.2.85. Curve

© ISO 2001 — All rights reserved

A Curve is a type of Wire_and_surface_element (see **4.2.372**) that is a one-dimensional manifold in a space of dimension two or three. A Curve may be a Conic (see **4.2.69**), a Free_form_curve (see **4.2.125**), a Line (see **4.2.196**), a Polygon (see **4.2.283**), or a Vector (see **4.2.368**).

NOTE Informally, a Curve can be envisioned as the path of a point moving in its coordinate space.

4.2.86. Cylinder

A Cylinder is a type of Csg_element (see **4.2.84**) that is a 3D cylindrical solid primitive with end surfaces that are planar and are perpendicular to the axis. The size and shape of a Cylinder is completely described by two real values that represent the radius and length of the cylinder.

4.2.87. Design_project

A Design_project is a task with a specifically defined purpose and scope that is used for the administration and management of plant designs.

The data associated with a Design_project are the following:

— description;

— name;

— owner.

4.2.87.1 description

The description specifies a textual explanation or summary of the Design_project.

4.2.87.2 name

The name specifies a textual label given to the Design_project.

4.2.87.3 owner

The owner specifies the name of the organization that is responsible for the Design_project.

4.2.88. Detail_shape

A Detail_shape is a type of Shape_representation (see **4.2.309**)that is the actual or intended external shape of a Plant_item (see **4.2.260**). A Detail_shape does not include the description of voids or other internal details of the shape of the Plant_item.

NOTE Contrast Detail_shape with Outline_shape (see **4.2.228**) and Envelope_shape (see **4.2.103**). A Detail_shape more closely approximates the actual shape of the Plant_item (see **4.2.260**) than either Envelope_shape or Outline_shape and is, therefore, likely to be more complex than either Envelope_shape or Outline_shape.

4.2.89. Document

A Document is the identification of a logical collection of information about a particular subject.

 © ISO 2001 — All rights reserved

The data associated with a Document are the following:

— document_id;

— version_id;

— document_type;

— internal_document_reference.

4.2.89.1 document_id

The document_id specifies a unique identification for the Document.

4.2.89.2 version_id

The version_id specifies a unique identification of a revision of a particular Document.

4.2.89.3 document_type

The document_type specifies the kind of Document.

EXAMPLE A document_type may be “coating specification”, “material test report”, “mill sheet”, “positive material identification record”, "specification", "record", "chart", etc.

4.2.89.4 internal_document_reference

The internal_document_reference specifies a specific location within a Document where information is represented.

4.2.90. Ducting_component

A Ducting_component is a type of Plant_item (see **4.2.260**) that conveys gaseous matter or airborne, particulate matter. Each Ducting_component may be one of the following: an Equipment_breaching (see **4.2.105**), an Hvac_ducting (see **4.2.151**), or a Process_ducting (see **4.2.286**).

EXAMPLE A Ducting_component that does not fall within one of the subtype categories may be cable trays, raceways, and other ducting used for routing and support of cables.

4.2.91. Ducting_system

A Ducting_system is a type of Plant_system (see **4.2.276**) that controls the temperature, humidity, cleanliness, and circulation of environmental or exhaust air as required in a Plant (see **4.2.258**). A Ducting_system may be an Hvac_system (see **4.2.176**).

The data associated with a Ducting_system are the following:

— type.

The type specifies a designation that classifies a Ducting_system based on the kind of service that it provides.

© ISO 2001 — All rights reserved

4.2.92. Dummy_leg

A Dummy_leg is a type of Piping_support (see **4.2.248**) that is attached to a corner of bent part. The main body of it is usually a pipe but shape steel or plate is occasionally used as the material of the part. The Dummy_leg is placed horizontally and supports the weight that acts perpendicularly to the axis of the main body.

NOTE Figure 15 depicts a typical Dummy_leg.

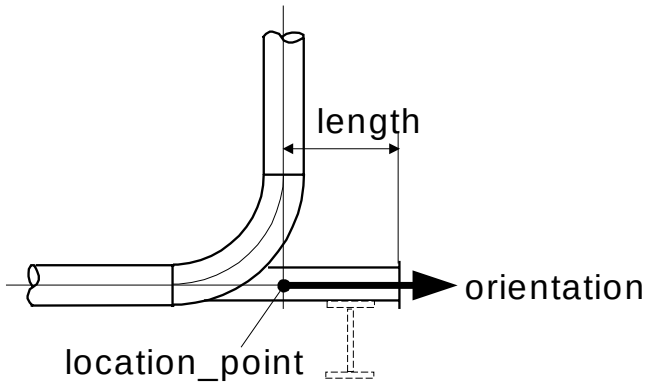

Figure 15 - Dummy_leg

The data associated with a Dummy_leg are the following:

— length.

The length specifies the distance between the end face of the Dummy_leg and the location_point.

4.2.93. Eccentric_base_elbow_support

An Eccentric_base_elbow_support is a type of Base_elbow_support (see **4.2.3**) positioned such that its vertical leg is shifted from the centreline of the pipe it supports.

NOTE Figure 16 depicts a typical Eccentric_base_elbow_support.

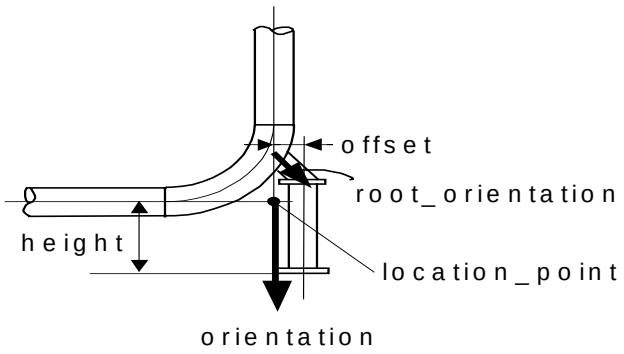

Figure 16 - Eccentric_base_elbow_support

 © ISO 2001 — All rights reserved

The data associated with an Eccentric_base_elbow_support are the following:

— offset;

— root_orientation.

4.2.93.1 offset

The offset is the perpendicular distance between the location_point and the centreline of the main body of the Eccentric_base_elbow_support.

4.2.93.2root_orientation

The root_orientation is the unit vector which gives the direction of the centreline of the inclined portion of the Eccentric_base_elbow_support at the point where it supports the pipe.

4.2.94. Eccentric_cone

An Eccentric_cone is a type of Csg_element (see **4.2.84**) that consists of a Cone (see **4.2.68**) with an axis that is not normal to the base.

4.2.95. Eccentric_cylinder

An Eccentric_cylinder is a type of Csg_element (see **4.2.84**) that consists of a Cylinder (see **4.2.86**) with an axis that is not normal to the base.

4.2.96. Eccentric_pyramid

An Eccentric_pyramid is a type of Csg_element (see **4.2.84**) that consists of a Pyramid (see **4.2.288**) with an axis that is not normal to the base.

4.2.97. Eccentric_reducer

An Eccentric_reducer is a type of Reducer (see **4.2.292**) where the small end is off-centre from the large end.

NOTE Figure 17 depicts a typical butt-weld Eccentric_reducer. The end_<number>_connectors correspond to the end_<number>_connector attributes defined in Reducer (see **4.2.292**).

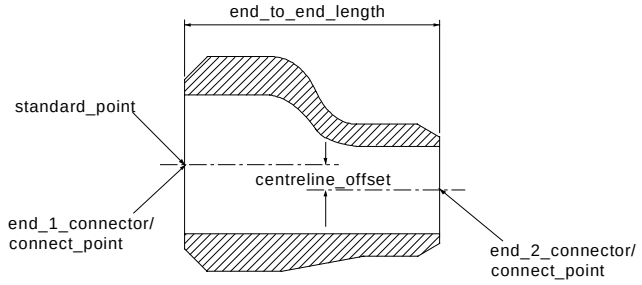

Figure 17 - Eccentric_reducer

© ISO 2001 — All rights reserved

The data associated with an Eccentric_reducer are the following:

— centreline_offset;

— flat_side_orientation.

4.2.97.1 centreline_offset

The centreline_offset specifies the perpendicular distance between the centreline of the large end of the Reducer (see **4.2.292**) and the centreline of the smaller end of the Reducer.

4.2.97.2 flat_side_orientation

The flat_side_orientation specifies the direction of the straight side of the Eccentric_reducer.

NOTE 1 The direction of the straight side is typically specified as up or down.

NOTE 2 The straight side of the Eccentric_reducer corresponds to the side where the ends of the Eccentric_reducer have a common tangent point parallel to the centreline axes of the Eccentric_reducer.

NOTE 3 Eccentric swage is a synonym for Eccentric Reducer which is normally used for smaller sizes.

4.2.98. Elbow

An Elbow is a type of Fitting (see **4.2.117**) that is used to change the direction of piping.

NOTE Figure 18 depicts a typical socket-weld Elbow.

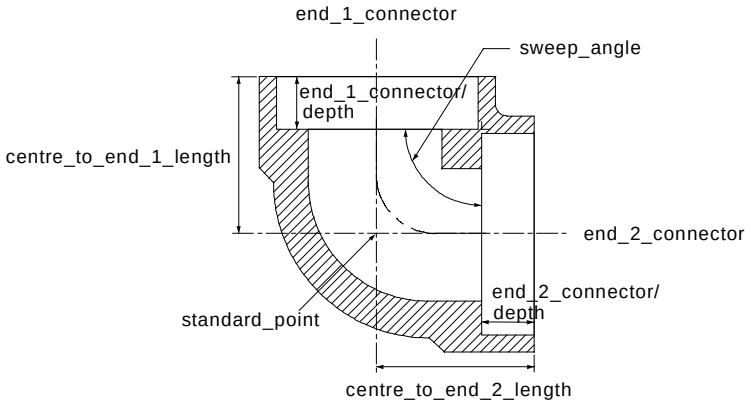

Figure 18 - Elbow

The data associated with an Elbow are the following:

— centre_to_end_1_length;

— centre_to_end_2_length;

— centreline_radius;

— end_1_connector;

 © ISO 2001 — All rights reserved

— end_2_connector;

— sweep_angle;

— type.

4.2.98.1 centre_to_end_1_length

The centre_to_end_1_length specifies the distance from the centre of the Elbow (i.e., where the centrelines for the two ends intersect) to the end-one face. It may be specified as a single value or as a range of values.

NOTE See annex L for a discussion of attributes that may be assigned a single value or a range of values.

4.2.98.2 centre_to_end_2_length

The centre_to_end_2_length specifies the distance from the centre of the Elbow (i.e., where the centrelines for the two ends intersect) to the end-two face. It may be specified as a single value or as a range of values.

NOTE See annex L for a discussion of attributes that may be assigned a single value or a range of values.

4.2.98.3 centreline_radius

The centreline_radius specifies the distance from the centreline of the Elbow to the intersection of the perpendicular projection of the centreline taken at the point where the Elbow centreline ends or where the inlet and outlet ends of the Elbow centreline become straight lines. It may be specified as a single value or as a range of values.

NOTE See annex L for a discussion of attributes that may be assigned a single value or a range of values.

4.2.98.4 end_1_connector

The end_1_connector specifies the Piping_connector (see **4.2.242**) designated as end one.

4.2.98.5 end_2_connector

The end_2_connector specifies the Piping_connector (see **4.2.242**) designated as end two.

4.2.98.6 sweep_angle

The sweep_angle specifies the included angle formed between two lines that are parallel to the end-one and end-two faces of the Elbow, measured at their point of intersection (the centre of radius of the Elbow). It may be specified as a single value or as a range of values.

NOTE See annex L for a discussion of attributes that may be assigned a single value or a range of values.

4.2.98.7 type

The type specifies a designation that classifies the Elbow.

EXAMPLE Examples of elbow designations include long radius, short radius, reducing, and street.

4.2.99. Electrical_component

© ISO 2001 — All rights reserved

An Electrical_component is a type of Plant_item (see **4.2.260**) that is an individually identifiable and functional part of an Electrical_system (see **4.2.101**).

EXAMPLE Examples of Electrical_components include cable tray, wireway, conduit, ductbank, cables, switches, relays, motor control centres, and junction boxes.

4.2.100. Electrical_connector

An Electrical_connector is a type of Plant_item_connector (see **4.2.265**) that is intended to establish an electrical connection (signal or power) between two Plant_item (see **4.2.260**) objects.

The data associated with an Electrical_connector are the following:

— type.

The type specifies the designation that describes the functional behaviour of the Electrical_-connector.

4.2.101. Electrical_system

An Electrical_system is a type of Plant_system (see **4.2.276**) that is a system of wiring, switches, relays, and other equipment associated with receiving and distributing electrical power.

The data associated with an Electrical_system are the following:

— system_voltage_designation;

— type.

4.2.101.1 system_voltage_designation

The system_voltage_designation is the rated voltage of the system.

4.2.101.2 type

The type specifies a designation that classifies the Electrical_system based on the kind of service that it provides.

4.2.102. Electricity_transference

An Electricity_transference is a type of Plant_item_connection (see **4.2.263**) that identifies the purpose or role of the connection as being the transfer of electrical current or signal.

4.2.103. Envelope_shape

An Envelope_shape is a type of Shape_representation (see **4.2.309**) that is a 3D spatial volume that completely encloses or bounds a Plant_item (see **4.2.260**). An Envelope_shape is a very simple geometric shape, such as a box, that encloses the plant item. An Envelope_shape may, but need not, include clearance or access spaces associated with the plant item.

 © ISO 2001 — All rights reserved

NOTE Contrast Envelope_shape with Detail_shape (see **4.2.88**) and Outline_shape (see **4.2.228**).

4.2.104. Equipment

An Equipment is a type of Plant_item (see **4.2.260**) that is treated as a single and self-contained unit that provides a function. Each Equipment may be an Inline_equipment (see **4.2.182**).

The data associated with an Equipment are the following:

— characteristics;

— equipment_type;

— heat_tracing_type;

— insulation_specification;

— rated_temperature;

— shock_qualification_status;

— vibration_amplitude;

— vibration_frequency.

4.2.104.1 characteristics

The characteristics specifies functional attributes of the Equipment.

EXAMPLE Characteristics of a pump may be that it operates at 80% efficiency while pumping 1250 gallons per minute.

4.2.104.2 equipment_type

The equipment_type specifies a classification of an Equipment based on its performance characteristics.

EXAMPLE Examples of equipment_type classifications include compressor, engine, furnace, gear box, heat exchanger, pressure vessel, pump, silo, tank, and turbine.

4.2.104.3 heat_tracing_type

The heat_tracing_type specifies the means utilized to impart a temperature increase to the Equipment by an external wrapping or coiling.

EXAMPLE Examples of heat_tracing_types include, but are not limited to, electrical or steam.

4.2.104.4 insulation_specification

The insulation_specification specifies the document that defines the insulation requirements for the Equipment.

4.2.104.5 rated_temperature

© ISO 2001 — All rights reserved

The rated_temperature applies to the maximum temperature of the environment where the operating equipment will be installed.

4.2.104.6 shock_qualification_status

The shock_qualification_status for hvac applications falls into an "A" or "B" category. Under category "A" an hvac component can withstand the full limits of shock and still operate. Under the "B" category the hvac component will not be operational after full shock but the component will remain intact.

4.2.104.7 vibration_amplitude

The vibration_amplitude is the magnitude, or amount, of displacement, velocity, or acceleration, measured from the "at rest" value. The amplitude of a vibration signal can be expressed in terms of "peak" level, "Peak-to-peak" level, or RMS level. It is somewhat of a de facto standard that Displacement is peak-to-peak, Velocity is peak, and Acceleration is RMS.

4.2.104.8 vibration_frequency

Vibration_frequency refers to the pitch of a sound generated by vibration within an hvac system. Usually measured in cycles per second (cps).

4.2.105. Equipment_breaching

An Equipment_breaching is a type of Ducting_component (see **4.2.90**) consisting of a type of ductwork connected to a piece of Equipment (see **4.2.104**) for the purpose of exhausting gases.

4.2.106. Equipment_trim_piping

An Equipment_trim_piping is piping connected to a piece of Equipment (see **4.2.104**) that performs a function integral to the Equipment.

NOTE The piping is normally designed and possibly provided or installed by the Equipment manufacturer. Piping of this nature is normally of nominal size two inches and below.

4.2.107. Expander_flange

An Expander_flange is a type of Flange (see **4.2.119**) that provides a transition from a smaller to a larger diameter Pipe (see **4.2.236**) at a flanged connection.

NOTE Figure 19 depicts a typical Expander_flange.

 © ISO 2001 — All rights reserved

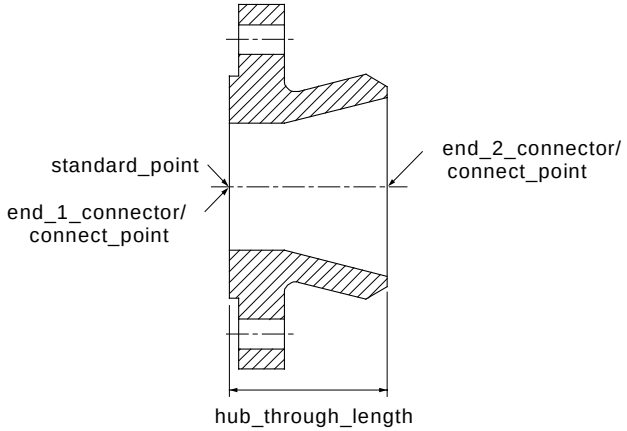

Figure 19 - Expander_flange

4.2.108. External_classification

An External_classification is a designation and description that classifies a Plant_item (see **4.2.260**), Plant (see **4.2.258**), Plant_system (see **4.2.276**), or Plant_item_connector (see **4.2.265**) based on predefined tables or sources defined externally to this part. The designation is a reference to the predefined table or source.

The data associated with an External_classification are the following:

— description;

— name;

— source.

4.2.108.1 description

The description specifies a textual explanation or summary of the External_classification.

4.2.108.2 name

The name specifies a textual label given to the External_classification.

4.2.108.3 source

The source specifies a designation that identifies a table or document that contains a list of candidate classifications that the name and description are drawn from.

4.2.109. Externally_defined_document

An externally_defined_document is a Document (see **4.2.89**) that is referenced from a source outside the context of an exchange.

The data associated with an Externally_defined_document are the following:

— source_id;

© ISO 2001 — All rights reserved

— source_description.

4.2.109.1 source_id

The source_id specifies a unique identification of the external origin of the document.

EXAMPLE A source_id may be “ANSI”, “ISO”, “ISO 13584”, “DIN”, “JIS”, “PFI”, “Joe’s notebook” or another external source.

4.2.109.2 source_description

The source_description is text that characterizes the external_source.

4.2.110. Externally_defined_user_defined_attribute_value

An Externally_defined_user_defined_attribute_value is a type of User_defined_attribute_value (see **4.2.366**).

The data associated with an Externally_defined_user_defined_attribute_value are the following:

— source;

The source specifies a textual identification of the reference resource in which the User_defined_attribute_value is described.

4.2.111. Extrusion

An Extrusion is a type of Csg_element (see **4.2.84**) that is a closed, 2D profile swept through a linear distance in space.

4.2.112. Facet_trigon

A Facet_trigon is a planar, polygonal surface with three sides.

NOTE In 3D computer models, curved surfaces are sometimes represented by a collection of Facets that approximate the curved surface.

4.2.113. Faceted_brep

A Facet_brep is a type of Csg_element (see **4.2.84**).

4.2.114. Faceted_surface_representation

A Faceted_surface_representation is a type of Site_shape_representation (see **4.2.315**) that consists of a collection of Facet_trigon (see **4.2.112**) objects that represent the topography of a Site (see **4.2.313**).

4.2.115. Family_definition

 © ISO 2001 — All rights reserved

A Family_definition is a Plant_item_definition (see **4.2.267**) that characterizes a set of Piping_component (see **4.2.240**) objects based on common physical characteristics. Physical characteristics may be specified as a specific value or as a range of values.

NOTE See annex L for a discussion of attributes that may be assigned a single value or a range of values.

EXAMPLE A Piping_specification (see **4.2.245**) describes a Family_definition, such as a class of elbows made of stainless steel that are long radius elbows between six inches and twenty four inches in diameter.

The data associated with a Family_definition are the following:

— family_classification_description.

The family_classification_description specifies a textual explanation of the principle characteristics that vary within the family.

4.2.116. Female_end

A Female_end is a type of Piping_connector (see **4.2.242**) end type that forms a recessed opening at the connector to support the insertion of a compatible male connector.

NOTE Figure 20 depicts a typical Female_end.

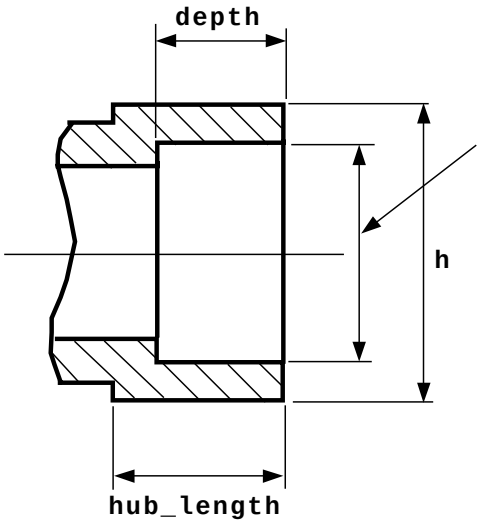

Figure 20 - Female_end

The data associated with a Female_end are the following:

— depth;

— hub_inside_diameter;

— hub_length;

— hub_outside_diameter.

© ISO 2001 — All rights reserved

4.2.116.1 depth

The depth specifies the distance from the face of the Piping_connector (see **4.2.242**) to the depth of relief. It may be specified as a single value or as a range of values.

NOTE See annex L for a discussion of attributes that may be assigned a single value or a range of values.

4.2.116.2 hub_inside_diameter

The hub_inside_diameter specifies the diameter of the opening at the hub. It may be specified as a single value or as a range of values.

NOTE See annex L for a discussion of attributes that may be assigned a single value or a range of values.

4.2.116.3 hub_length

The hub_length specifies the distance from the face of the Plant_item_connector (see **4.2.265**) to the point where the hub size transitions to the body size of the Plant_item (see **4.2.260**). It may be specified as a single value or as a range of values.

NOTE See annex L for a discussion of attributes that may be assigned a single value or a range of values.

4.2.116.4 hub_outside_diameter

The hub_outside_diameter specifies the external diameter of the hub. It may be specified as a single value or as a range of values.

NOTE See annex L for a discussion of attributes that may be assigned a single value or a range of values.

4.2.117. Ferrule

A Ferrule is a metal cylinder placed over a hose end to affix the fitting to the hose.

NOTE Figure 21 depicts a typical Ferrule.

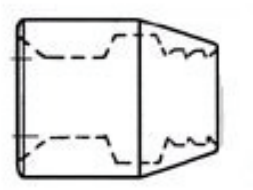

Figure 21 - Ferrule

The data associated with a Ferrule are the following:

— end_1_connector;

— end_2_connector;

— length.

 © ISO 2001 — All rights reserved

4.2.117.1 end_1_connector

The end_1_connector specifies the Piping_connector (see **4.2.242**) designated as end one.

4.2.117.2 end_2_connector

The end_2_connector specifies the Piping_connector (see **4.2.242**) designated as end two.

4.2.117.3 length

The length is the distance between the end_1_connector and the end_2_connector.

4.2.118. Fitting

A Fitting is a type of Piping_component (see **4.2.240**) used to join or terminate sections of Pipe (see **4.2.236**) or provide changes of direction or branching in a Piping_system (see **4.2.249**). Each Fitting may be one of the following: a Blank (see **4.2.5**), a Bushing (see **4.2.15**), a Coupling (see **4.2.76**), a Cross (see **4.2.77**), an Elbow (see **4.2.98**), a Flange (see **4.2.119**), an Insert (see **4.2.184**), a Lap_joint_stub_end (see **4.2.194**), a Lateral (see **4.2.195**), an Olet (see **4.2.225**), an Orifice_plate (see **4.2.227**), a Pipe_closure (see **4.2.237**), a Reducer (see **4.2.292**), a Spacer (see **4.2.322**), a Tee (see **4.2.351**), a Union (see **4.2.364**), or a Y_type_lateral (see **4.2.373**).

4.2.119. Flange

A Flange is a type of Fitting (see **4.2.117**) that is an annular collar that permits a bolted connection to a similar collar. Each Flange contains two end connectors, one of which shall be a Piping_connector (see **4.2.242**) of type Flanged_end. Each Flange may be one of the following: a Blind_flange (see **4.2.6**), an Expander_flange (see **4.2.107**), an Orifice_flange (see **4.2.226**), or a Reducing_flange (see **4.2.293**). Each Flange may be one of the following: a Lap_joint_flange (see **4.2.193**), a Slip_on_flange (see **4.2.317**), a Socket_weld_flange (see **4.2.320**), a Threaded_flange (see **4.2.353**), or a Weld_neck_flange (see **4.2.370**).

The data associated with a Flange are the following:

— end_1_connector;

— end_2_connector;

— hole_straddle_centreline_orientation;

— hub_through_length;

— hub_weld_point_diameter.

4.2.119.1 end_1_connector

The end_1_connector specifies the Piping_connector (see **4.2.242**) at the flange face.

4.2.119.2 end_2_connector

The end_2_connector specifies the Piping_connector (see **4.2.242**) at the hub face.

© ISO 2001 — All rights reserved

4.2.119.3 hole_straddle_centreline_orientation

The hole_straddle_centreline_orientation is the orientation of the hole straddle centreline of the Flange in plant coordinates. The hole straddle centreline is the line on the flange surface connected between the centre of the Flange and the middle point of two neighboring bolt holes.

NOTE Figure 22 depicts hole_straddle_centreline_orientation.

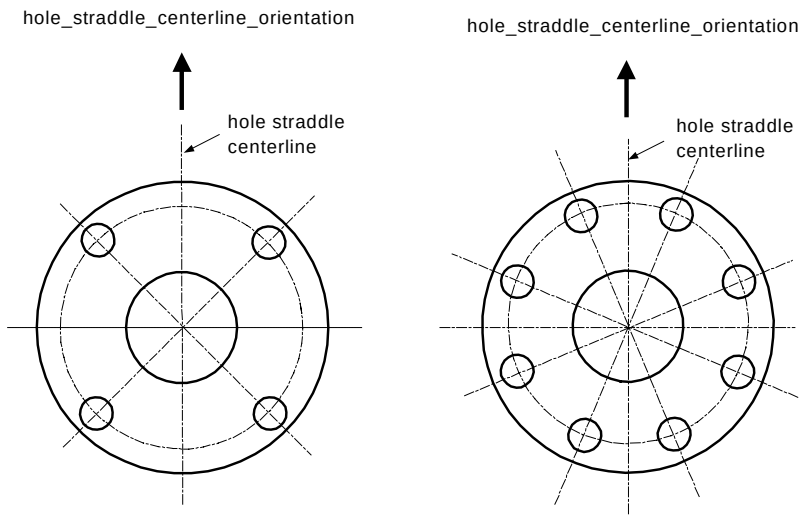

Figure 22 - Hole_straddle_centreline_orientation

NOTE The receiving system may transform the plant coordinates into a local coordinate system if necessary.

4.2.119.4 hub_through_length

The hub_through_length specifies the distance between the flange face and the hub face. It may be specified as a single value or as a range of values.

NOTE See annex L for a discussion of attributes that may be assigned a single value or a range of values.

4.2.119.5 hub_weld_point_diameter

The hub_weld_point_diameter specifies the outside diameter of the hub at the point of connection between the flange and the pipe. It may be specified as a single value or as a range of values.

NOTE See annex L for a discussion of attributes that may be assigned a single value or a range of values.

4.2.120. Flanged

A Flanged is a type of Piping_connector (see **4.2.242**) end engagement type consisting of a circular disk of material with holes around the circumference and a facing style.

 © ISO 2001 — All rights reserved

NOTE The holes are used to bolt together two connected flanges. The facing is the mating surface that in conjunction with a gasket forms a tight connection by the pressure of the two connected flanged connectors. A flanged connection can be disassembled.

4.2.121. Flanged_end

A Flanged_end is a type of Piping_connector (see **4.2.242**) end type that is a circular disk of material that supports the insertion of bolts to mate with a compatible Flanged_end.

NOTE Figure 23 depicts a typical Flanged_end.

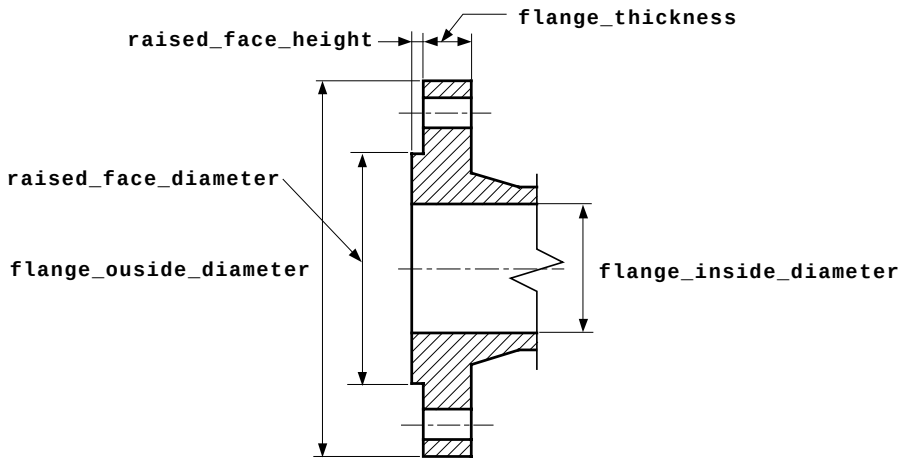

Figure 23 - Flanged_end

The data associated with a Flanged_end are the following:

— face_finish;

— face_type;

— flange_inside_diameter;

— flange_outside_diameter;

— flange_thickness;

— raised_face_diameter;

— raised_face_height;

— ring_bottom_radius;

— ring_diameter;

— ring_width.

© ISO 2001 — All rights reserved

4.2.121.1 face_finish

The face_finish specifies a description of the Flange (see **4.2.119**) face surface roughness and groove pattern.

4.2.121.2 face_type

The face_type specifies a classification of the mating surface of a Flange (see **4.2.119**) based on its shape characteristics.

EXAMPLE Examples of face_type designations include raised_face, flat_face, ring_type_joint, male_face_of_male_and_female, female_face_of_male_and_female, male_face_of_tongue_and_groove, and female_face_of_tongue_and_groove.

NOTE Figures 24 to 28 depict these face types.

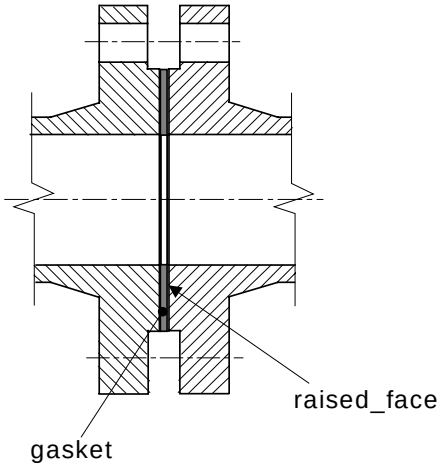

Figure 24 - Raised face flange

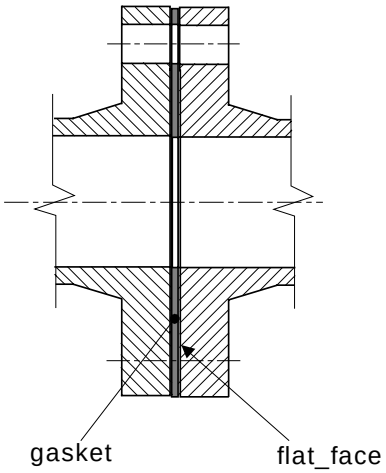

Figure 25 – Flat face flange

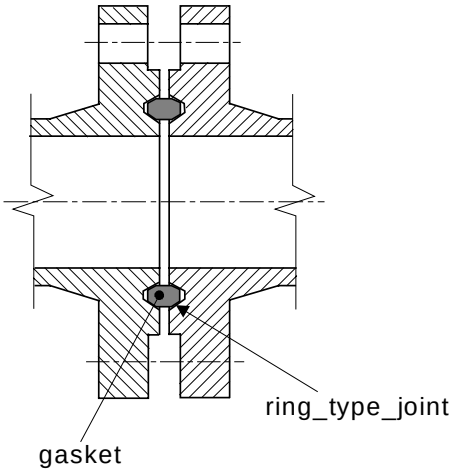

Figure 26 - Ring type joint flange

 © ISO 2001 — All rights reserved

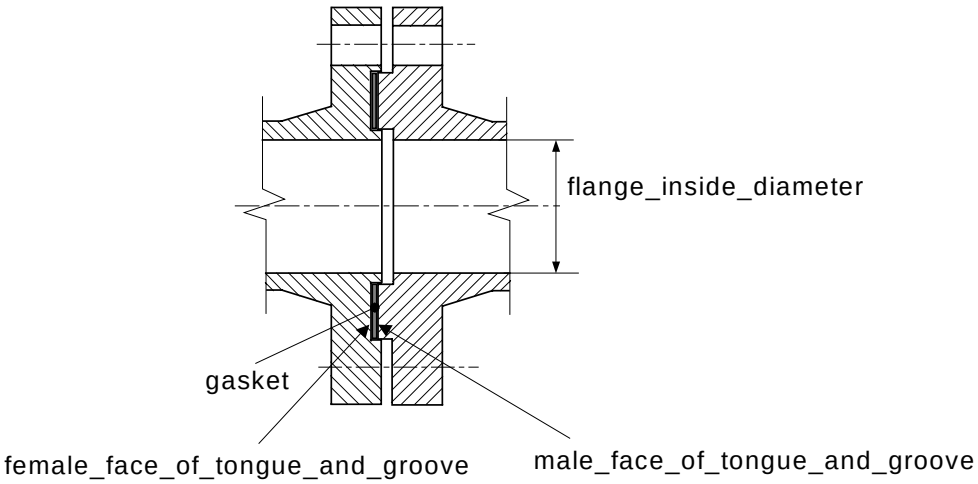

Figure 27 - Male and female flange

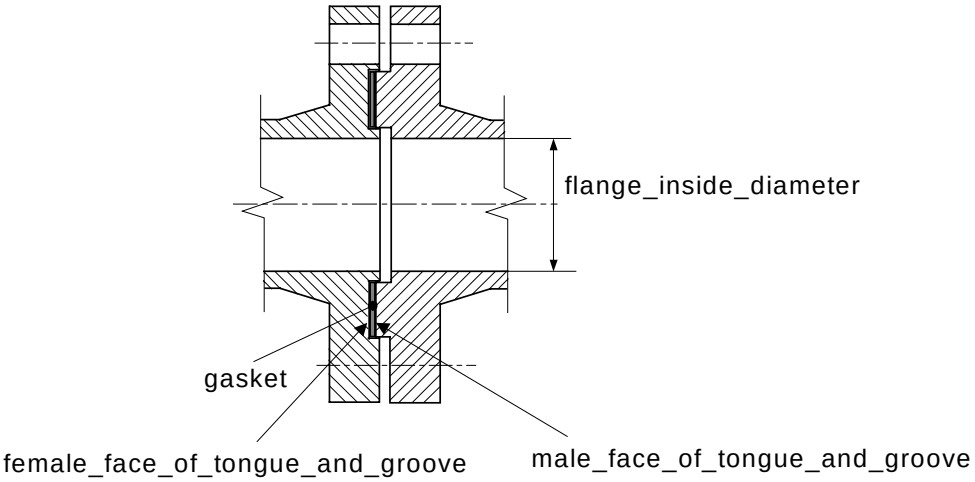

Figure 28 - Tongue and groove flange

4.2.121.3 flange_inside_diameter

The flange_inside_diameter specifies the interior diameter of the Flange (see **4.2.119**) at the working point. It may be specified as a single value or as a range of values.

© ISO 2001 — All rights reserved

NOTE See annex L for a discussion of attributes that may be assigned a single value or a range of values.

4.2.121.4 flange_outside_diameter

The flange_outside_diameter specifies the external diameter of the Flange (see **4.2.119**). It may be specified as a single value or as a range of values.

NOTE See annex L for a discussion of attributes that may be assigned a single value or a range of values.

4.2.121.5 flange_thickness

The flange_thickness specifies the distance between the inside and outside Flange (see **4.2.119**) disk surfaces, measured at the disk perimeter. It may be specified as a single value or as a range of values.

NOTE See annex L for a discussion of attributes that may be assigned a single value or a range of values.

4.2.121.6 raised_face_diameter

The raised_face_diameter specifies the diameter measured across the elevated portion of the mating surface of a Flange (see **4.2.119**). It may be specified as a single value or as a range of values.

NOTE See annex L for a discussion of attributes that may be assigned a single value or a range of values.

4.2.121.7 raised_face_height

The raised_face_height specifies the perpendicular distance measured from the elevated portion of the Flange (see **4.2.119**) mating surface to the lower Flange surface. It may be specified as a single value or as a range of values.

NOTE See annex L for a discussion of attributes that may be assigned a single value or a range of values.

4.2.121.8 ring_bottom_radius

The ring_bottom_radius specifies the radial measure of the bottom corners of a ring in raised face. The ring_bottom_radius may not be specified for a particular Flanged_end, but when specified must be accompanied by raised_face_diameter, raised_face_height, ring_diameter, and ring_width.

4.2.121.9 ring_diameter

The ring_diameter specifies the diameter of a ring in the raised-face portion of a Flanged_end. The ring_diameter may not be specified for a particular Flanged_end, but when specified must be accompanied by raised_face_diameter, raised_face_height, ring_bottom_radius, and ring_width.

4.2.121.10 ring_width

The ring_width specifies the width of the groove formed by a ring in the raised-face portion of a Flanged_end. The ring_width may not be specified for a particular Flanged_end, but when specified must be accompanied by raised_face_diameter, raised_face_height, ring_bottom_radius, and ring_diameter.

 © ISO 2001 — All rights reserved

4.2.122. Flared_end

A Flared_end is an end_type where the inside_diameter and outside_diameter at the end is increased with no change in thickness forming a kind of lip.

The data associated with a Flared_end are the following:

— diameter;

— thickness.

4.2.122.1 diameter

The diameter is the inside diameter at the end of the flare (largest point).

4.2.121.2 thickness

The thickness is the Fitting (see **4.2.118**) thickness at the point the diameter is measured.

4.2.123. Flexible_connection

A Flexible_connection is a type of Plant_item_connection (see **4.2.263**) in which two Plant_item_connector (see **4.2.265**) objects are in physical contact, though there is no implication concerning the freedom of motion of the connected Plant_item (see **4.2.260**) objects.

EXAMPLE The pump driver may be connected to an electrical cable at its terminal using a Flexible_connection; the cable need not rotate when the pump is rotated, but contact must be preserved.

4.2.124. Fluid_transference

A Fluid_transference is a type of Plant_item_connection (see **4.2.263**) that identifies the purpose or role of the connection as being the transfer of gas, vapour, liquid or solid material.

4.2.125. Free_form_curve

A Free_form_curve is a type of Curve (see **4.2.85**). It is a one-dimensional, contiguous set of points.

4.2.126. Functional_connection_definition_satisfaction

A Functional_connection_definition_satisfaction is the assignment of an actual Connection_-definition (see **4.2.72**) to a functional Connection_definition for the purpose of satisfying the functional requirements with a physical object.

The data associated with a Functional_connection_definition_satisfaction are the following:

— functional_connection_definition;

— physical_connection_definition.

© ISO 2001 — All rights reserved

4.2.126.1 functional_connection_definition

The functional_connection_definition is a reference to the connection_id of the Connection_definition (see **4.2.72**) object that describes the functional view of the connection.

4.2.126.2 physical_connection_definition

The physical_connection_definition is a reference to the connection_id of the Connection_definition object that describes the physical view of the connection that satisfies the function specified by the functional view of the definition of the connection.

4.2.127. Functional_connection_occurrence_satisfaction

A Functional_connection_occurrence_satisfaction is the assignment of an actual Plant_item_connection_occurrence (see **4.2.264**) to a functional Plant_item_connection_-occurrence for the purpose of satisfying the functional requirements with a physical object. The data associated with a Functional_connection_occurrence _satisfaction are the following:

— physical_connection.

The physical_connection is a reference to the connection_id of the occurrence of the connection that describes the physical view of the connection that satisfies the function specified by the functional view of the occurrence of the connection.

4.2.128. Functional_connector

A Functional_connector is a type of Plant_item_connector_occurrence (see **4.2.266**) that represents the functional or logical aspect of the Plant_item_connector_occurrence. Each Functional_connector is either: a Line_plant_item_branch_connector (see **4.2.202**) or a Line_-plant_item_connector (see **4.2.204**).

4.2.129. Functional_connector_definition_satisfaction

A Functional_connector_definition_satisfaction is the assignment of an actual Connector_-definition (see **4.2.75**) to a functional Connector_definition for the purpose of satisfying the functional requirements with a physical object.

4.2.130. Functional_connector_occurrence_satisfaction

A Functional_connector_occurrence_satisfaction is the assignment of an actual Physical_-connector (see **4.2.234**) to a Functional_connector (see **4.2.128**) for the purpose of satisfying the functional requirements with a physical object.

4.2.131. Functional_design_view

A Functional_design_view is a type of Plant_item_design_view (see **4.2.268**) that indicates that data associated with the Plant_item (see **4.2.260**) are the logical characteristics of a Plant_item rather than the physical.

 © ISO 2001 — All rights reserved

The data associated with a Functional_design_view are the following:

— tag_number.

The tag_number specifies an optional identifier assigned to the Plant_item (see **4.2.260**) for purposes of functional identification and eventual physical tracking.

4.2.132. Functional_plant

A Functional_plant is a Plant (see **4.2.258**) that is the identification of a view of the Plant that aggregates the functional characteristics of the Plant.

4.2.133. Functional_plant_item_satisfaction

A Functional_plant_item_satisfaction is the assignment of a Physical_design_view (see **4.2.235**) to a Functional_design_view (see **4.2.131**) for the purpose of satisfying the functional requirements with a physical object.

4.2.134. Functional_plant_satisfaction

A Functional_plant_satisfaction is the assignment of an actual Planned_physical_plant (see **4.2.256**) to a Functional_plant (see **4.2.132**) for the purpose of satisfying the functional requirements with a physical object.

The data associated with a Functional_plant _satisfaction are the following:

— functional_plant;

— planned_physical.

4.2.134.1 functional_plant

The functional_connection_definition is a reference to the plant_id of the Functional_plant object that describes the functional view of the connection.

4.2.134.2 planned_physical

The planned_physical is a reference to the plant_id of the Planned_physical_plant object that describes the physical view of the plant that satisfies the function specified by the functional view of the plant.

4.2.135. Gasket

A Gasket is a type of Piping_component (see **4.2.240**) that seals a connection between two connectors.

NOTE Gaskets are primarily used with Flanged (see **4.2.120**) Plant_item_connector (see **4.2.265**).

The data associated with a Gasket are the following:

© ISO 2001 — All rights reserved

— compressed_thickness;

— uncompressed_thickness.

4.2.135.1 compressed_thickness

The compressed_thickness specifies the distance between the two parallel surfaces of the Gasket in its compressed state in a connection. It may be specified as a single value or as a range of values.

NOTE See annex L for a discussion of attributes that may be assigned a single value or a range of values.

4.2.135.2 uncompressed_thickness

The uncompressed_thickness specifies the as-procured distance between the two parallel surfaces of the Gasket. It may be specified as a single value or as a range of values.

NOTE See annex L for a discussion of attributes that may be assigned a single value or a range of values.

4.2.136. Gis_position

A Gis_position is the positioning and orientation information necessary for transforming coordinate values between a local coordinate space and the global coordinate system of earth. Transformation procedures depend upon the geographic information system (GIS) coordinate system. Each Gis_position object designates the global position and orientation of a Site_shape_-representation (see **4.2.315**).

The data associated with a Gis_position are the following:

— height;

— scale;

— system;

— x_axis_delta_x;

— x_axis_delta_y;

— x_coordinate;

— y_coordinate;

— zone.

4.2.136.1 height

The height specifies the distance above sea level or reference level in the GIS coordinate system.

4.2.136.2 scale

 © ISO 2001 — All rights reserved

The scale specifies a transformation factor applied to the conversion of point coordinates between a local coordinate system and a GIS coordinate system. The precise application of the transformation will depend on the GIS system.

4.2.136.3 system

The system specifies the identifier of the GIS system being used.

EXAMPLE Gauss-Krueger, Universal Transverse Mercator (UTM), and State Plane are examples of GIS systems used for global positioning.

4.2.136.4 x_axis_delta_x

The x_axis_delta_x specifies the abscissa value of the end point of a vector indicating the positive x-axis of GIS coordinate space in the local coordinate system.

4.2.136.5 x_axis_delta_y

The x_axis_delta_y specifies the ordinate value of the end point of a vector indicating the orientation or the positive x-axis of GIS coordinate space in the local coordinate system.

EXAMPLE The GIS coordinate system XY00 has an origin at the intersection of the equator and the Greenwich meridian. The x-axis of the coordinate system runs East (positive) and West (negative). The y-axis runs North (positive) and South (negative). The positive z-axis is up (above sea level or the reference level in the GIS coordinate system). The negative z-axis is down (below sea level or the reference level in the GIS coordinate system). An x_axis_delta_x of 1.0 and x_axis_delta_y of 1.0 indicates x axis of the GIS coordinate space makes a +45° angle with respect to the x axis of the local coordinate; if the local coordinate space were superimposed on the GIS coordinate space, the positive x-axis of the local coordinate system would point in a South-East direction (-45°).

4.2.136.6 x_coordinate

The x_coordinate specifies the distance from the y-axis of the coordinate space defined by the GIS system and zone.

4.2.136.7 y_coordinate

The y_coordinate specifies the distance from the x-axis of the coordinate space defined by the GIS system and zone.

The zone specifies a subdivision of the earth's surface based on the GIS system.

EXAMPLE The Gauss-Krueger GIS system subdivides the earth into 120 zones that are 3° in longitudinal width. Each zone is identified as 3°, 6°, 9°, etc., from the Greenwich meridian.

4.2.137. Grooved_end

A Grooved_end is a type of Piping_connector (see **4.2.242**) end type that contains a circumferential groove cut or is rolled on a pipe surface for a grooved joint connection.

NOTE Figure 29 depicts a typical Grooved_end.

© ISO 2001 — All rights reserved

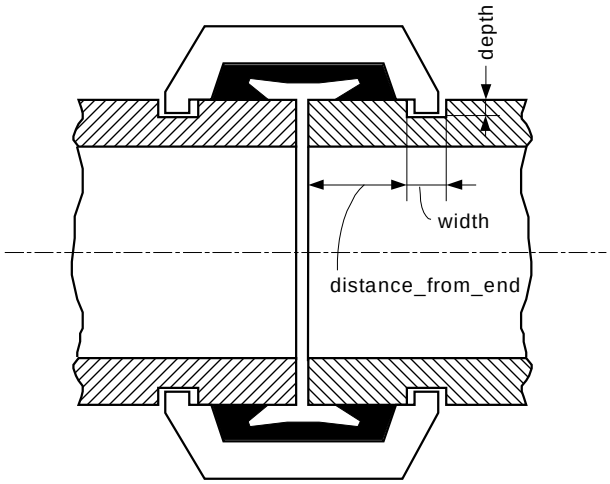

Figure 29 - Grooved_end

The data associated with a Grooved_end are the following:

— depth;

— distance_from_end;

— width.

4.2.137.1 depth

The depth specifies the distance between the outer surface of the Pipe (see **4.2.236**) and the bottom of the groove. It may be specified as a single value or as a range of values.

NOTE See annex L for a discussion of attributes that may be assigned a single value or a range of values.

4.2.137.2 distance_from_end

The distance_from_end specifies the distance between the end of the Pipe (see **4.2.236**) and the inner edge of the groove. It may be specified as a single value or as a range of values.

NOTE See annex L for a discussion of attributes that may be assigned a single value or a range of values.

4.2.137.3 width

The width specifies the distance between the inner edge and the outer edge of the groove. It may be specified as a single value or as a range of values.

NOTE See annex L for a discussion of attributes that may be assigned a single value or a range of values.

4.2.138. Gusset

 © ISO 2001 — All rights reserved

A Gusset is a type of Reinforcing_component (see **4.2.296**) that is a tensile member placed diagonally between run pipe and branch pipe, and prevents the branch from breaking or deforming.

NOTE Figure 30 depicts a Gusset.

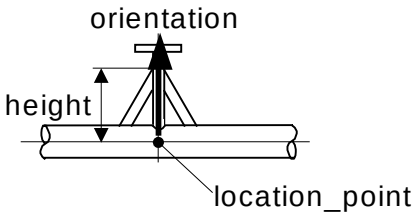

Figure 30 - Gusset

The data associated with a Gusset are the following:

— height.

The height is the distance between the location point and the most outer point of the Gusset welded to the branch pipe. It may be specified as a single value or as a range of values.

NOTE See annex L for a discussion of attributes that may be assigned a single value or a range of values.

4.2.139. Hemisphere

A Hemisphere is a type of Csg_element (see **4.2.84**) that is formed by cutting a Sphere (see **4.2.326**) with a plane that passes through the centre point of the Sphere and removing one section.

4.2.140. Hexagon_head_bolt

A Hexagon_head_bolt is a type of a Bolt (see **4.2.8**) that has a hexagonal head at one end and a screw thread on the other.

The data associated with a Hexagon_head_bolt are the following:

— length.

The length specifies the distance from the inner face of the hexagonal head to the tip of the screw thread. It may be specified as a single value or as a range of values.

NOTE See annex L for a discussion of attributes that may be assigned a single value or a range of values.

4.2.141. Hierarchically_organized_collection

A Hierarchically_organized_collection is a type of Plant_item_collection (see **4.2.262**) that indicates whether a Plant_item (see **4.2.260**) that is a member of an aggregate Plant_item is related to other Plant_items that are also members of the aggregate Plant_item. The members of the aggregate may, but need not, be connected.

4.2.142. Hvac_access_opening

© ISO 2001 — All rights reserved

An Hvac_access_opening is a hole in an Hvac_component (see **4.2.145**) providing maintenance access.

The data associated with an Hvac_access_opening are the following:

— access_opening_id;

— access_type;

— shape.

4.2.142.1 access_opening_id

This attribute differentiates one Hvac_access_opening on an Hvac_component (see **4.2.145**) from another.

4.2.142.2 access_type

This attribute specifies the type of opening in the Hvac_component (see **4.2.145**).

4.2.142.3 shape

The shape is the volumetric representation of the Hvac_access_opening or the projection of the Hvac_access_opening on the Hvac_component (see **4.2.145**).

4.2.143. Hvac_bend

An Hvac_bend is an Hvac_fitting (see **4.2.157**) which follows a curved path. The cross section of the fitting is normal to the path.

The data associated with an Hvac_bend are the following:

— bend_path;

— end_1_connector;

— end_2_connector;

— length.

4.2.143.1 bend_path

The bend_path is the centreline trace of the Hvac_bend.

4.2.143.2 end_1_connector

The end_1_connector is the primary connecting end of an Hvac_bend.

4.2.143.3 end_2_connector

 © ISO 2001 — All rights reserved

The end_2_connector is the secondary connecting end of an Hvac_bend.

4.2.143.4 length

The length refers to the extent of the Hvac_bend from beginning to end.

4.2.144. Hvac_branch_connection

An Hvac_branch_connection is a connection between the logical termination of one Hvac_section_segment (see **4.2.169**) and a point on another Hvac_section segment other than a termination.

The data associated with an Hvac_branch_connection are the following:

— branch_sequence_id.

.

This attribute specifies an alphanumeric identifier that indicates the order that branches extend from the main Hvac_section_segment (see **4.2.169**).

NOTE All branch_sequence_ids are unique with respect to the branches of a given Hvac_section_segment (see **4.2.169**).

4.2.145. Hvac_component

An Hvac_component is a type of Plant_item (see **4.2.260**) that is an individually identifiable item or combination of items that is part of an Hvac_system (see **4.2.176**). Each Hvac_component may be one of the following: an Hvac_equipment (see **4.2.156**), an Hvac_fitting (see **4.2.157**), an Hvac_ducting (see **4.2.151**), and Hvac_instrument (see **4.2.160**), and an Hvac_flow_control_device (see **4.2.158**).

EXAMPLE The description attribute inherited from Plant_item (see **4.2.260**) is used to describe the Hvac_component. Examples to descriptions include "air handling unit", "chiller", or "space heater".

An Hvac_component applies to any element that is a subset member of an Hvac_system (see **4.2.176**).

The data associated with an Hvac_component are the following:

— design_flow_rate;

— design_flow_condition;

— design_pressure;

— design_temperature;

— pressure_loss_coefficient;

— pressure_drop;

— velocity.

4.2.145.1 design_flow_rate

© ISO 2001 — All rights reserved

This attribute specifies the required flow volume over a specific unit of time.

4.2.145.2 design_flow_condition

This attribute defines the flow volume under standard operating procedures.

4.2.145.3 design_pressure

This attribute specifies the maximum allowable pressure at the Hvac_connector (see **4.2.147**). It may be specified as a single value or as a range of values.

NOTE 1 This value is normally created as part of doing 3D analysis of the Hvac_system (see **4.2.176**) design.

NOTE 2 See annex L for a discussion of attributes that may be assigned a single value or a range of values.

4.2.145.4 design_temperature

This attribute specifies the maximum allowable temperature at the Hvac_connector (see **4.2.147**). It may be specified as a single value or as a range of values.

NOTE 1 This value is normally created as part of doing 3D analysis of the Hvac_system (see **4.2.176**) design.

NOTE 2 See annex L for a discussion of attributes that may be assigned a single value or a range of values.

4.2.145.5 pressure_loss_coefficient

This attribute specifies a mathmatical expression applied to the Hvac_system (see **4.2.176**) pressure to indicate loss to the system air flow due to internal system factors such as friction and turbulence.

4.2.145.6 pressure_drop

This attribute specifies the loss of air flow due to leaks, friction, or distance.

4.2.145.7 velocity

This attribute specifies the distance which air moves per unit of time, usually in feet per minute or feet per second.

4.2.146. Hvac_component_thickness

An Hvac_component_thickness is the skin thickness of the Hvac_component (see **4.2.145**).

The data associated with an Hvac_component_thickness are the following:

— sheet_metal_thickness;

— thickness_type.

4.2.146.1 sheet_metal_thickness

This attribute specifies the dimension between two of the sheet metals opposite surfaces. The thickness specifies the perpendicular distance between the two faces of the sheet metal. It may be specified as a single value or as a range of values.

 © ISO 2001 — All rights reserved

NOTE See Annex L for a discussion of attributes that may be assigned a single value or a range of values.

4.2.146.2 thickness_type

This atribute specifies the specific unit measurement type applied to quantify the thickness for a given element of an Hvac_system (see **4.2.176**).

4.2.147. Hvac_connector

An Hvac_connector is a type of Plant_item_connector (see **4.2.265**) that is intended to establish a material flow connection between two Plant_item (see **4.2.260**) objects. within an Hvac_system (see **4.2.176**).

The data associated with an Hvac_connector are the following:

— name;

— hvac_connector_specification;

— hvac_joint_inspection_specification;

— connector_flow_direction;

— hvac_joint_test_specification;

— hvac_joint_engagement_length;

— hvac_joint_joining_type;

— hvac_joint_sealant_type;

— hvac_joint_joint_type;

— hvac_joint_tightness.

4.2.147.1 name

This attribute specifies a textual label given to the Hvac_connector.

4.2.147.2 hvac_connector_specification

This attribute specifies the specification associated with the Hvac_connector. There may be more than one hvac_connector_specification for an Hvac_connector.

EXAMPLE Examples of the identified connector_specification include insulation specification, end preparation specification, and thread specification.

4.2.147.3 hvac_joint_inspection_specification

This attribute specifies the criteria for the review and approval processes of Hvac_component (see **4.2.145**) connections.

4.2.147.4 connector_flow_direction

This attribute specifies the direction process air moves past the Plant_item (see **4.2.260**). The value of connector_flow_direction is one of the following:

© ISO 2001 — All rights reserved

— both
— inlet
— outlet

4.2.147.5 hvac_joint_test_specification

This attribute specifies the test and evaluation procedures which apply to Hvac_component (see **4.2.145**) connections.

4.2.147.6 hvac_joint_engagement_length

This attribute specifies the length of the interface between joined Hvac_components (see **4.2.145**).

4.2.147.7 hvac_joint_joining_type

This attribute specifies the method of mechanically joining the Hvac_components (see **4.2.145**). The value of the hvac_joint_joining_type may be one of the following:

— weld
— solder
— lapped_rivet
— sheet_metal_screw

4.2.147.8 hvac_joint_sealant_type

This attribute specifies the method used to seal the joint in order to satisfy the leak condition specified by the hvac_joint_tightness. The value of the hvac_joint_sealant_type may be one of the following:

— hvac_gasket
— hvac_thermal_fit_band
— hvac_duct_sealant
— hvac_tape

4.2.147.8.1 hvac_gasket

The hvac_gasket is a seal or packing used between components to prevent the escape of air.

4.2.147.8.2 hvac_thermal_fit_band

The hvac_thermal_fit_band is usually associated with spiral duct work where one piece is slid into another. The thermal_fit_band or coupler is placed around the joint and when heated seals the ducts together.

4.2.147.8.3 hvac_duct_sealant

The hvac_duct_sealant is an adhesive agent used to secure hvac components to prevent seepage of moisture or air.

4.2.147.8.4 hvac_tape

The hvac_tape provides a seal to the hvac_joint_joint_type

4.2.147.9 hvac_joint_joint_type

This attribute specifies the method used to join Plant_item_connection_occurrence (see **4.2.264**) objects.

 © ISO 2001 — All rights reserved

4.2.147.10 hvac_joint_tightness

This attribute specifies the ability of the joint to resist leakage. The value of hvac_joint_tightness is one of the following:

— air_tight
— water_tight
— non_water_tight
— drip_tight

4.2.147.10.1 air_tight

An air_tight joint shall not allow any gas to leak through the joint.

4.2.147.10.2 water_tight

A water_tight joint shall not allow any water to leak through the joint.

4.2.147.10.3 non_water_tight

Non_water_tight refers to an hvac joint description which is not required to prevent or retard the passage of any liquid or air at the designated hvac joint.

4.2.147.10.4 drip_tight

A drip_tight joint shall not allow any fluid, including air to leak from the joint.

4.2.148. Hvac_connector_service_characteristic

An Hvac_connector_service_characteristic defines the operating conditions for which the Hvac_connector (see **4.2.147**) is designed.

The data associated with an Hvac_connector_service_characteristic are the following:

— design_pressure;

— design_temperature.

4.2.148.1 design_pressure

This attribute specifies the maximum allowable pressure at the Hvac_connector (see **4.2.147**). It may be specified as a single value or as a range of values.

NOTE 1 This value is normally created as part of doing 3D analysis of the Hvac_system (see **4.2.176**) design.

NOTE 2 See annex L for a discussion of attributes that may be assigned a single value or a range of values.

4.2.148.2 design_temperature

This attribute specifies the maximum allowable temperature at the Hvac_connector (see **4.2.147**). It may be specified as a single value or as a range of values.

NOTE 1 This value is normally created as part of doing 3D analysis of the Hvac_system (see **4.2.176**) design.

© ISO 2001 — All rights reserved

NOTE 2 See annex L for a discussion of attributes that may be assigned a single value or a range of values.

4.2.149. Hvac_coupling

An Hvac_coupling is a type of Hvac_fitting (see **4.2.157**) which makes a flexible or rigid connection between two Hvac_component (see **4.2.145**) objects.

The data associated with an Hvac_coupling are the following:

— end_1_connector;

— end_2_connector;

— length;

— offset_x;

— offset_y.

4.2.149.1 end_1_connector

This attribute is the primary connecting end of an Hvac_coupling.

4.2.149.2 end_2_connector

This attribute is the secondary connecting end of an Hvac_coupling.

4.2.149.3 length

This attribute is the distance of the Hvac_coupling from beginning to end.

4.2.149.4 offset_x

This attribute specifies the distance between end_connector_1 and end_connector_2 as measured along the x axis of the Hvac_cross_section (see **4.2.150**).

4.2.149.5 offset_y

This attribute specifies the distance between end_connector_1 and end_connector_2 as measured along the y axis of the Hvac_cross_section (see **4.2.150**).

4.2.150. Hvac_cross_section

An Hvac_cross_section is a planar shape created by a plane cutting through an Hvac_component (see **4.2.145**) at a right angle to the components centreline axis. This reveals the external outline of the component. Each Hvac_cross_section may be one of the following: a Cross_section_flat_oval (see **4.2.78**), a Cross_section_non_standard (see **4.2.79**), a Cross_section_radiused_corner (see **4.2.80**), a Cross_section_rectangular (see **4.2.81**), a Cross_section_round (see **4.2.82**), and a Cross_section_triangular (see **4.2.83**).

 © ISO 2001 — All rights reserved

The data associated with an Hvac_cross_section are the following:

— equivalent_length .

The term equivalent_length with respect to the Hvac_cross_section means both width and height dimensions are the same.

4.2.151. Hvac_ducting

An Hvac_ducting is a type of Ducting_component (see **4.2.90**) and a type of Hvac_component (see **4.2.145**) that is an individually identifiable piece or section of ducting that is part of an Hvac_system (see **4.2.176**). The hvac_specification_id is a designation that differentiates one Hvac_specification (see **4.2.175**) from another.

The data associated with an Hvac_ducting are the following:

— duct_path;

— duct_seam;

— length;

— end_1_connector;

— end_2_connector.

4.2.151.1 duct_path

This attribute is the centreline trace of the Hvac_ducting.

4.2.151.2 duct_seam

This attribute refers to the line formed where two surfaces of the duct overlap each other.

4.2.151.3 length

This attribute is the distance of the Hvac_ducting from beginning to end.

4.2.151.4 end_1_connector

The end_1_connector is the primary connecting end of a piece of duct.

4.2.151.5 end_2_connector

The end_2_connector is the secondary connecting end of a piece of duct.

4.2.152. Hvac_elbow_90deg_reducing

The Hvac_elbow_90deg_reducing is a type of Hvac_fitting (see **4.2.157)** in which the flow of the air changes direction through a 90 degree turn and the cross section transitions from one size diameter to another.

© ISO 2001 — All rights reserved

In terms of geometric construction, there are two closed curves with an interior trace curve from centre to centre upon which the surface is created.

NOTE 1 In terms of geometric construction, there are two closed curves with an interior trace curve from centre to centre upon which the surface is created.

NOTE 2 Figure 31 depicts an Hvac_elbow_90deg_reducing.

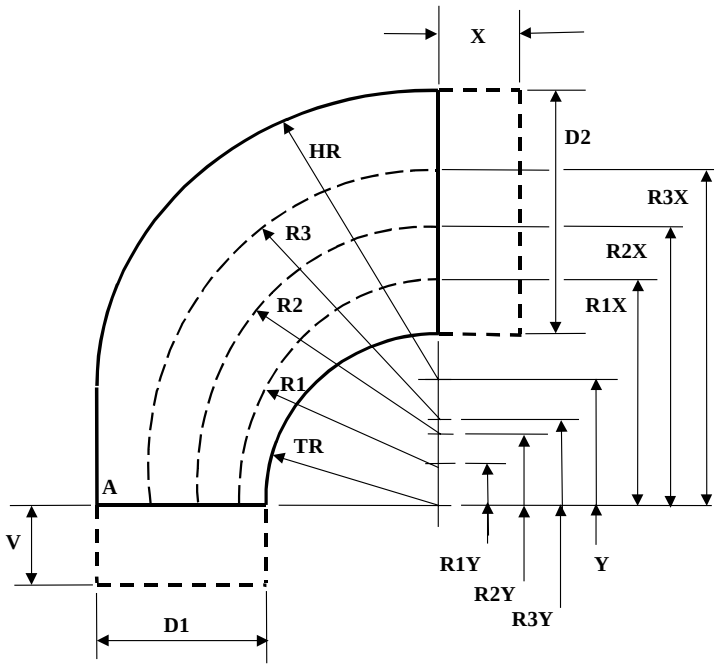

Figure 31 - Hvac_elbow_90deg_reducing

The data associated with an Hvac_elbow_90deg_reducing are the following:

— angle;

— throat_radius;

— heel_radius;

— heel_radius_centre_offset;

— end_1_connector;

— end_2_connector.

4.2.152.1 angle

This attribute specifies the sweep angle in degrees for the component elbow.

 © ISO 2001 — All rights reserved

4.2.152.2 throat_radius

This attribute specifies the inside radius for the component elbow.

4.2.152.3 heel_radius

This attribute specifies the outside radius for the component elbow.

4.2.152.4 heel_radius_centre_offset

This attribute specifies the vertical distance from the throat centre to the splitter centre.

4.2.152.5 end_1_connector

The end_1_connector is the primary connecting end of a component elbow.

4.2.152.6 end_2_connector

The end_2_connector is the secondary connecting end of a component elbow.

4.2.153. Hvac_elbow_centred

The Hvac_elbow_centred is is a type of Hvac_fitting (see **4.2.157**) in which the flow of the air changes direction.

In terms of geometric construction, there are two closed curves with an interior trace curve from centre to centre upon which the surface is created.

NOTE Figure 32 depicts an Hvac_elbow_centred.

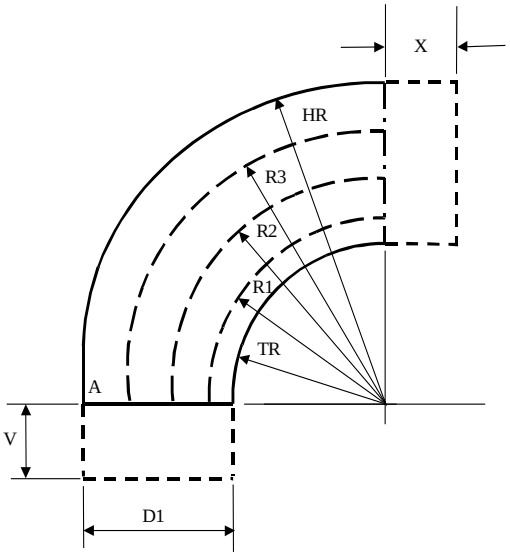

Figure 32 - Hvac_elbow_centred

The data associated with an Hvac_elbow_centred are the following:

© ISO 2001 — All rights reserved

— angle;

— width;

— height;

— throat_radius;

— heel_radius;

— end_1_connector;

— end_2_connector.

4.2.153.1 angle

This attribute specifies the sweep angle in degrees for the component elbow.

4.2.153.2 width

This attribute specifies the distance between the sides of the elbow component. Not indicated on the sketch.

4.2.153.3 height

This attribute specifies the vertical distance from the throat centre to the heel_radius.

4.2.153.4 throat_radius

This attribute specifies the inside radius for the component elbow.

4.2.153.5 heel_radius

This attribute specifies the outside radius for the component elbow.

4.2.153.6 end_1_connector

The end_1_connector is the primary connecting end of a component elbow.

4.2.153.7 end_2_connector

The end_2_connector is the secondary connecting end of a component elbow.

4.2.154. Hvac_elbow_mitre

An Hvac_elbow_mitre is a type of Hvac_fitting (see **4.2.157**) developed through the use of two or more straight sections of vent that are beveled and joined on a line bisecting the angle of junction.

NOTE Figure 33 depicts an Hvac_elbow_mitre.

 © ISO 2001 — All rights reserved

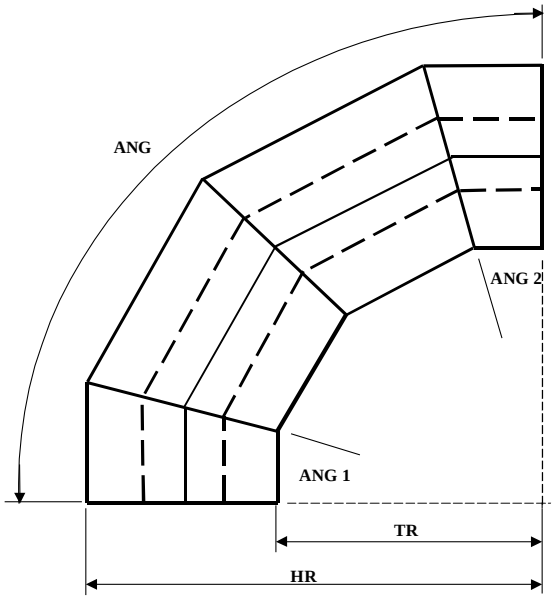

Figure 33 - Hvac_elbow_mitre

The data associated with an Hvac_elbow_mitre are the following:

— angle_first_section;

— angle_last_section;

— number_of_sections;

— sweep_angle;

— throat_radius;

— heel_radius;

— end_1_connector;

— end_2_connector.

4.2.154.1 angle_first_section

This attribute specifies the sweep angle in degrees for the first section of the mitred elbow development.

4.2.154.2 angle_last_section

This attribute specifies the sweep angle in degrees for the last section of the mitred elbow development.

4.2.154.3 number_of_sections

This attribute specifies how many sections are necessary to develop the mitred elbow.

© ISO 2001 — All rights reserved

4.2.154.4 sweep_angle

This attribute specifies the overall angle of the elbow.

4.2.154.5 throat_radius

This attribute specifies the inside radius for the component elbow.

4.2.154.6 heel_radius

This attribute specifies the outside radius for the component elbow.

4.2.154.7 end_1_connector

The end_1_connector is the primary connecting end of a component elbow.

4.2.154.8 end_2_connector

The end_2_connector is the secondary connecting end of a component elbow.

4.2.155. Hvac_end_fitting

An Hvac_end_fitting is a type of Hvac_fitting (see **4.2.157**) which only connects to one other Hvac_component (see **4.2.145**).

The data associated with an Hvac_end_fitting are the following:

— end_1_connector;

— opening_type.

4.2.155.1 end_1_connector

The end_1_connector is the primary connecting end of an Hvac_end_fitting.

4.2.155.2 opening_type

This attribute specifies the type of opening at the end of the fitting which does not have a connector.

4.2.156. Hvac_equipment

An Hvac_equipment is a type of Hvac_component (see **4.2.145**) used to develop a functional Hvac_system (see **4.2.176**).

4.2.157. Hvac_fitting

An Hvac_fitting is an individual component of an hvac duct system. Each Hvac_fitting may be one of the following: Hvac_coupling (see **4.2.149**), an Hvac_elbow_90deg_reducing (see **4.2.152**), an Hvac_elbow_centred (see **4.2.153**), an Hvac_elbow_mitre (see **4.2.154**), an Hvac_end_fitting (see **4.2.155**), an Hvac_fitting (see **4.2.157**), an Hvac_gasket (see **4.2.159**), an Hvac_offset_centred (see **4.2.161**), an Hvac_offset_ogee_centred (see **4.2.162**), an Hvac_takeoff (see **4.2.178**), an Hvac_transition (see **4.2.179**), and an Hvac_transition_slanted (see **4.2.180**).

4.2.158. Hvac_flow_control_device

 © ISO 2001 — All rights reserved

An Hvac_flow_control_device is a type of Hvac_component (see **4.2.145**) of the Hvac_system (see **4.2.176**) that regulates the airflow based on the inline design conditions and settings.

Note Such devices fall into four catagories and include sensors, controllers, controlled devices, and auxiliary devices. Auxiliary devices include relays, transducers, and switches.

The data associated with an Hvac_flow_control_device are the following:

— flow_control_device_id;

— control_device_type;

— end_1_connector;

— end_2_connector;

— control_point_units;

— control_point_nominal_value;

— control_point_min_value;

— control_point_max_value;

— control_point_set_point_value.

4.2.158.1 flow_control_device_id

The flow_control_device_id is the unique identifier for each of the inline control devices. These include sensors, controllers, controlled devices, and auxiliary devices. It is the unique id for the Hvac_flow_control_devices.

4.2.158.2 control_device_type

This attribute specifies the type of device which controls flow.

4.2.158.3 end_1_connector

The end_1_connector is the primary connecting end of an Hvac_flow_control_device.

4.2.158.4 end_2_connector

The end_2_connector is the secondary connecting end of an Hvac_flow_control_device.

4.2.158.5 control_point_units

this attribute specifies the units as pounds per square inch.

4.2.158.6 control_point_nominal_value

This attribute specifies the average controlled airflow in pounds per square inch (psi).

4.2.158.7 control_point_min_value

This attribute specifies the minimun controlled airflow in pounds per square inch (psi).

4.2.158.8 control_point_max_value

This attribute specifies the maximun controlled airflow in pounds per square inch (psi).

© ISO 2001 — All rights reserved

4.2.158.9 control_point_set_point_value

This attribute specifies the variable value assigned as the primary parameter upon which the Hvac_system (see **4.2.176**) maintains temperature control.

4.2.159. Hvac_gasket

An Hvac_gasket is a type of Hvac_component (see **4.2.145**) used between components to prevent the escape of air.

Example An example of an Hvac_gasket is is a seal or packing.

4.2.160. Hvac_instrument

An Hvac_instrument is a type of Hvac_fitting (see **4.2.157**) which monitors, measures, indicates, and records the system status.

Note The purpose of the Hvac_instrument is to provide information to the plant operator for analyzing, troubleshooting, and improving the operation of the Hvac_system (see **4.2.176**).

The data associated with an Hvac_instrument are the following:

— instrument_id;

— units;

— low_range;

— high_range;

— type;

— parameter_measured;

— low_alarm;

— high_alarm;

— nameplate_inscription;

— divisions.

4.2.160.1 instrument_id

This attribute specifies the unique identifier for each Hvac_instrument.

4.2.160.2 units

This attribute specifies the units recorded by the Hvac_instrument.

Note The units applied to Hvac_instruments will vary in accordance with the particular Hvac_system (see **4.2.176**) function that is monitored.

4.2.160.3 low_range

This attribute specifies the low end setting for a particular Hvac_system (see **4.2.176**) function.

 © ISO 2001 — All rights reserved

Example Oil pressure gauge.

4.2.160.4 high_range

This attribute specifies high end setting for an Hvac_system (see **4.2.176**) function.

4.2.160.5 type

This attribute specifies a specific kind of Hvac_instrument device used to monitor an Hvac_system (see **4.2.176**).

4.2.160.6 parameter_measure

This attribute specifies a function that is monitored or measured.

Example Voltage, current, pressure, velocity.

4.2.160.7 low_alarm

This attribute specifies a function of an Hvac_instrument device.

4.2.160.8 high_alarm

This attribute specifies a function of an Hvac_instrument device.

4.2.160.9 nameplate_inscription

This attribute specifies the text on the nameplate used to identify an Hvac_instrument (see **4.2.160**) and the function it is designed to carry out.

4.2.160.10 divisions

This attribute specifies the gradations on the gauge.

4.2.161. Hvac_offset_centred

An Hvac_offset_centred is a type of Hvac_connector (see **4.2.147**) fitting.

The data associated with an Hvac_offset_centred are the following:

— angle;

— offset;

— length;

— throat_radius;

— heel_radius;

— end_1_connector;

— end_2_connector.

4.2.161.1 angle

This attribute specifies the number of degrees for the radial sections at both top and bottom.

4.2.161.2 offset

© ISO 2001 — All rights reserved

This attribute specifies the perpendicular distance between the centres of two Hvac_components (see **4.2.145**) which are to be connected.

4.2.161.3 length

This attribute specifies the horizontal distance between two Hvac_component (see **4.2.145**) objects from connection point one to connection point two.

4.2.161.4 throat_radius

This attribute specifies the inside radius for the end sections of the Hvac_offset_centred fitting.

4.2.161.5 heel_radius

This attribute specifies the outside radius for the end sections of the Hvac_offset_centred fitting.

4.2.161.6 end_1_connector

The end_1_connector is the primary connecting end of an Hvac_offset_centred fitting.

4.2.161.7 end_2_connector

The end_2_connector is the secondary connecting end of an Hvac_offset_centred fitting.

4.2.162. Hvac_offset_ogee_centred

An Hvac_offset_ogee_centred is a type of Hvac_fitting (see **4.2.157**) that appears to be an “s” shaped component.

NOTE Figure 34 depicts an Hvac_offset_ogee_centred.

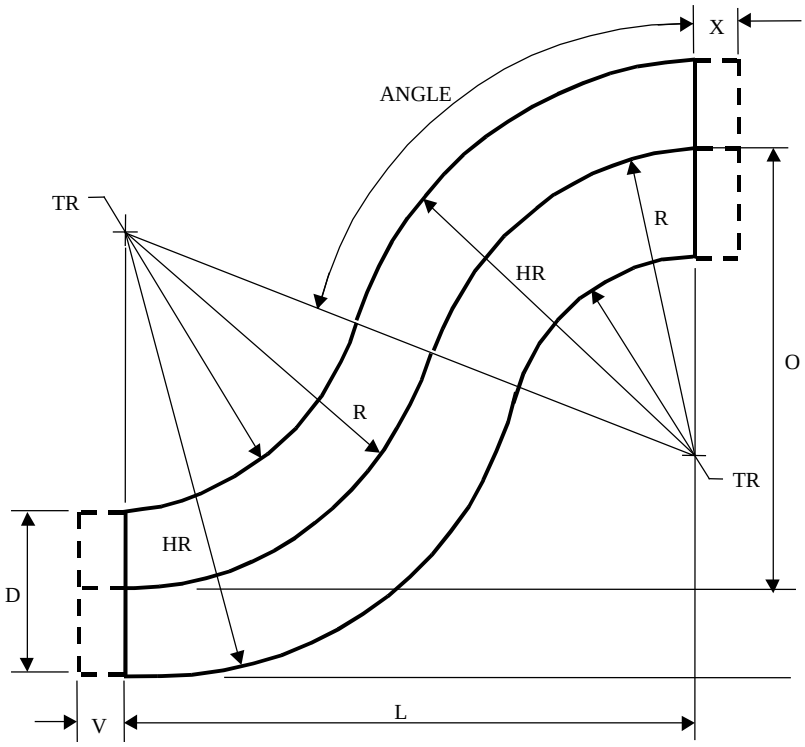

Figure 34 - Hvac_offset_ogee_centred

The data associated with an Hvac_offset_ogee_centred are the following:

 © ISO 2001 — All rights reserved

— angle;

— offset;

— length;

— throat_radius;

— heel_radius;

— end_1_connector;

— end_2_connector.

4.2.162.1 angle

This attribute specifies the number of degrees applied to the upper and lower heel and throat radius construction.

4.2.162.2 offset

This attribute specifies the perpendicular distance between the centrelines of the upper and lower connecting ends of the Hvac_offset_ogee_centred component.

4.2.162.3 length

This attribute specifies the horizontal distance between end_1_connector and end_2_connector of the Hvac_offset_ogee_centred fitting.

4.2.162.4 throat_radius

This attribute specifies the interior radius of the radial transition of the Hvac_offset_ogee_centred. It applies to the upper and lower transitions.

4.2.162.5 heel_radius

This attribute specifies the exterior radius of the radial transition of the Hvac_offset_ogee_centred. It applies to the upper and lower transition.

4.2.162.6 end_1_connector

The end_1_connector is the primary connecting end of an Hvac_offset_ogee_centred.

4.2.162.7 end_2_connector

The end_2_connector is the secondary connecting end of an Hvac_offset__ogee_centred.

4.2.163. Hvac_plant_item_branch_connection

An Hvac_plant_item_branch_connection is a connection between an Hvac_plant_item_branch_connection and a point on an Hvac_section_segment (see **4.2.169**) other than an Hvac_section_segment_terminator (see **4.2.171**). Each Hvac_plant_item_branch_-connection defines the branches of exactly one Hvac_section_segment (see **4.2.169)**.

The data associated with an Hvac_plant_item_branch_connection are the following:

— branch_sequence_id.

© ISO 2001 — All rights reserved

The branch_sequence_id specifies an alphanumeric identifier that indicates the order that branches extend from the main Hvac_section_segment (see **4.2.169**).

NOTE All branch_sequence_ids are unique with respect to the branches of a given Hvac_section_segment (see **4.2.169**).

4.2.164. Hvac_plant_item_branch_connector

An Hvac_plant_item_branch_connector is a type of Functional_connector (see **4.2.128**) which connects an Hvac_plant_item_branch_connector to a point on an Hvac_section_segment (see **4.2.169**) other than a termination. The Hvac_plant_item_branch_connector branches from the Hvac_section_segment.

4.2.165. Hvac_plant_item_connection

An Hvac_plant_item_connection is a linkage between two or more Hvac_plant_item_connector (see **4.2.166**) objects. The joining conditions may be specified for the connection.

4.2.166. Hvac_plant_item_connector

An Hvac_plant_item_connector is a type of Functional_connector (see **4.2.128**) which is a feature of a Plant_item (see **4.2.260**) that is designed to connect to a connector on another hvac Plant_-item.

4.2.167. Hvac_plant_item_termination

An Hvac_plant_item_termination is a type of Hvac_section_segment_termination (see **4.2.171**) that connects to an Hvac_plant_item_connection (see **4.2.165**).

4.2.168. Hvac_section_branch_termination

An Hvac_section_branch_termination is a type of Hvac_section_segment_termination (see **4.2.171**) that connects to an Hvac_section_segment (see **4.2.169**) at a point other than a termination.

4.2.169. Hvac_section_segment

An Hvac_section_segment is an element of an Hvac_system_section (see **4.2.177**) which terminates at a functional Plant_item_connector (see **4.2.265**), a tap into an Hvac_system_section, or a point where the stream diverges or converges.

The data associated with an Hvac_section_segment are the following:

— hvac_segment_id;

— pressure_drop.

4.2.169.1 hvac_segment_id

This attribute specifies a unique identifier for the Hvac_section_segment.

4.2.169.2 pressure_drop

This attribute specifies the drop in pressure in the Hvac_section_segment.

 © ISO 2001 — All rights reserved

4.2.170. Hvac_section_segment_insulation

An Hvac_ section_segment_insulation is a piece of insulation which is applied uniformly to the Hvac_section_segment (see **4.2.169**).

The data associated with an Hvac_section_segment_insulation are the following:

— insulation_thickness;

— insulation_type;

— insulation_description;

— insulation_specification.

4.2.170.1 insulation_thickness

This attribute specifies the total thickness of the insulation measure from the surface of the Hvac_section_segment (see **4.2.169**) outward.

4.2.170.2 insulation_type

This attribute specifies the type of material which keeps the hot side hot and the cold side cold.

4.2.170.3 insulation_description

This attribute specifies a description of the insulation.

4.2.170.4 insulation_specification

This attribute specifies a document which describes the properties of the insulation.

4.2.171. Hvac_section_segment_termination

An Hvac_section_segment_termination is one of the logical end-points of an Hvac_section_-segment (see **4.2.169**). Each Hvac_section_segment_termination may be one of the following: an Hvac_section_branch_termination (see **4.2.168**), an Hvac_section_termination (see **4.2.172**), an Hvac_section_to_section_termination (see **4.2.174**), and an Hvac_plant_item_termination (see **4.2.167**).

The data associated with an Hvac_section_segment_termination are the following:

— flow_direction.

The flow_direction is the direction of flow of the fluid with respect to the Hvac_section_segment (see **4.2.169**).

4.2.172. Hvac_section_termination

An Hvac_section_termination is a type of Hvac_section_segment_termination (see **4.2.171**) that begins or ends an Hvac_section_segment (see **4.2.169**).

The data associated with an Hvac_section_termination are the following:

— location;

— start_or_end.

© ISO 2001 — All rights reserved

4.2.172.1 location

This attribute specifies the relative distance in the X, Y, Z directions of the position of the end of the Hvac_section_segment (see **4.2.169**), from the plant origin.

NOTE The location position may also be defined by where it connects to an upstream piece of Equipment (see **4.2.104**) or Hvac_section_segment.

4.2.172.2 start_or_end

This attribute specifies an enumerated value that defines the side of the Hvac_ducting (see **4.2.151**) on which the section termination lies.

NOTE A value of 'start' indicates the section termination is on the upstream end, and a value of 'end' indicates that the section termination is on the downstream end.

4.2.173. Hvac_section_to_section_connection

An Hvac_section_to_section_connection is a connnection between two Hvac_section_segments (see **4.2.169**) .

The data associated with an Hvac_section_to_section_connection are the following:

— section_to_section_connection_id.

The section_to_section_connection_id is a unique identifier of the connection between two Hvac_section_segments (see **4.2.169**).

4.2.174. Hvac_section_to_section_termination

An Hvac_section_to_section_termination is the terminating segment of an Hvac_section_segment (see **4.2.169**) which is the terminating segment of an Hvac_section_segment (see **4.2.169**).

4.2.175. Hvac_specification

The data associated with an Hvac_specification are the following:

— hvac_specification_id;

— name;

— owner;

— service_description.

4.2.175.1 hvac_specification_id

This attribute specifies a designation that differentiates one Hvac_specification from another.

4.2.175.2 name

This attribute specifies a textual label given to the Hvac_specification.

4.2.175.3 owner

This attribute specifies the owner as a point of contact for the specification.

 © ISO 2001 — All rights reserved

4.2.175.4 service_description

This attribute specifies the service that this specification applies to.

4.2.176. Hvac_system

An Hvac_system is a type of Ducting_system (see **4.2.91**) that controls the temperature, humidity, cleanliness, and circulation of environmental air as required in a Building (see **4.2.14**).

4.2.177. Hvac_system_section

An Hvac_system_section consists of one or many Hvac_section_segments (see **4.2.169**).

The data associated with an Hvac_system_section are the following:

— hvac_section_id;

The hvac_section_id specifies a unique identifier for the Hvac_section_segment (see **4.2.169**).

4.2.178. Hvac_takeoff

An Hvac_takeoff is a type of Hvac_fitting (see **4.2.157**) which has three end connectors.

The data associated with an Hvac_takeoff are the following:

— end_1_connector;

— end_2_connector;

— end_3_connector;

— centre_to_end_1_length;

— centre_to_end_2_length;

— centre_to_end_3_length;

— takeoff_angle.

4.2.178.1 end_1_connector

The end_1_connector is the connector to the inlet of the Hvac_takeoff.

4.2.178.2 end_2_connector

The end_2_connector is the connector to the outlet of the Hvac_takeoff.

4.2.178.3 end_3_connector

The end_3_connector is the connector to the branch of the Hvac_takeoff.

4.2.178.4 centre_to_end_1_length

This attribute specifies the distance from the intersection of the branch and the run to end_1_connector which is the inlet of the Hvac-fitting (see **4.2.157**).

4.2.178.5 centre_to_end_2_length

© ISO 2001 — All rights reserved

This attribute specifies the distance from the intersection of the branch and the run to end_2_connector which is the outlet of the Hvac_fitting (see **4.2.157**).

4.2.178.6 centre_to_end_3_length

This attribute specifies the distance from the intersection of the branch and the run to end_3_connector which is the branch of the Hvac_fitting (see **4.2.157**).

4.2.178.7 takeoff_angle

This attribute specifies the angle between the through run of the Hvac_fitting (see **4.2.157**) and the line segment connecting the intersection of the branch and the run to the termination to the end_3_connector.

4.2.179. Hvac_transition

An Hvac_transition is a type of Hvac_fitting (see 4.2.157**)** between two Hvac_section_segments (see **4.2.169**) having different cross sections, shapes, size, or having an offset.

NOTE Figure 35 depicts an Hvac_transition from Rectangular to Round

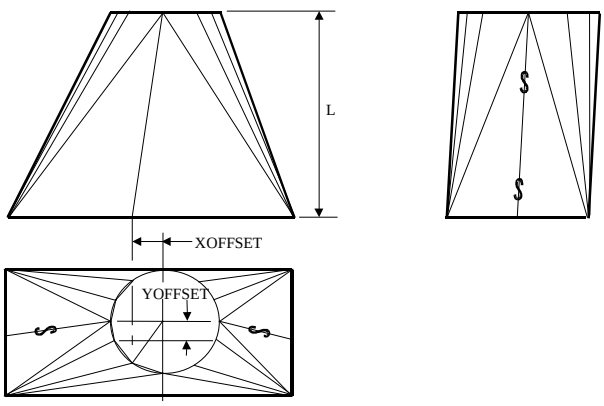

Figure 35 - Transition - Rectangular to Round

The data associated with an Hvac_transition are the following:

— offset_x;

— offset_y;

— length;

— end_1_connector;

— end_2_connector.

4.2.179.1 offset_x

This attribute specifies the distance from the inlet to the outlet as shown by XOFFSET in Figure 35

 © ISO 2001 — All rights reserved

4.2.179.2 offset_y

This attribute specifies the distance from the inlet to the outlet as shown by YOFFSET in Figure 35

4.2.179.3 length

This attribute specifies the length of the transition as shown by L in Figure 35.

4.2.179.4 end_1_connector

The end_1_connector is the primary connecting end of a transition.

4.2.179.5 end_2_connector

The end_2_connector is the secondary connecting end of a transition.

4.2.180. Hvac_transition_slanted

An Hvac_transition_slanted is a type of Hvac_fitting (see **4.2.157**) which provides a change in size and a change in direction between two Plant_items (see **4.2.260**).

NOTE Figure 36 depicts an Hvac_transition_slanted from Rectangle to Round

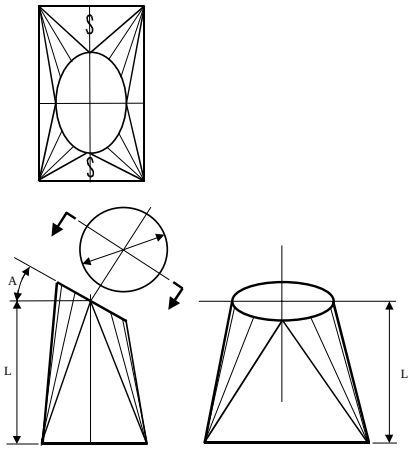

Figure 36 - Transition - Rectangle to Round Slanted

The data associated with an Hvac_transition_slanted are the following:

— slant_angle;

— length;

— end_1_connector;

— end_2_connector.

4.2.180.1 slant_angle

© ISO 2001 — All rights reserved

This attribute specifies the slant angle of the transition as shown by A in Figure 36.

4.2.180.2 length

This attribute specifies the length between end_1_connector and end_2_connector.

4.2.180.3 end_1_connector

The end_1_connector is the primary connecting end of a slanted transition.

4.2.180.4 end_2_connector

The end_2_connector is the secondary connecting end of a slanted transition.

4.2.181. Hybrid_shape_representation

A Hybrid_shape_representation is a type of Shape_representation. (see **4.2.309**).

4.2.182. Inline_equipment

An Inline_equipment is a type of Equipment (see **4.2.104**) and Piping_system_component (see **4.2.250**) that is inserted into the flow of a process stream to perform a function.

4.2.183. Inline_instrument

An Inline_instrument is a type of Instrument (see **4.2.188**) and Piping_system_component (see **4.2.250**) that is inserted into the flow of a process stream to measure some characteristic of the stream.

EXAMPLE Thermowells, pressure gauges, and flowmeters are examples of Inline_instruments.

The data associated with an Inline_instrument are the following:

— control_loop_id.

A control_loop_id specifies a unique identfier for a control module that is implemented by an Inline_instrument.

4.2.184. Insert

An Insert is a type of Fitting (see **4.2.118**) with one external and one smaller internal end.

NOTE Figure 37 depicts a typical Insert.

 © ISO 2001 — All rights reserved

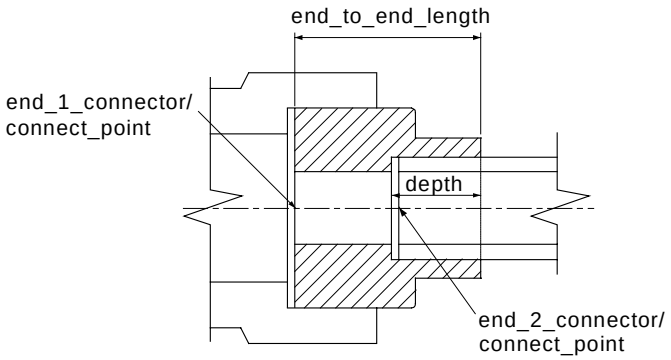

Figure 37 - Insert

The data associated with an Insert are the following:

— end_1_connector;

— end_2_connector;

— end_to_end_length.

4.2.184.1 end_1_connector

The end_1_connector specifies the Piping_connector (see **4.2.242**) designated as Male_end (see **4.2.215**).

4.2.184.2 end_2_connector

The end_2_connector specifies the Piping_connector (see **4.2.242**) designated as Female_end (see **4.2.116**).

4.2.184.3 end_to_end_length

The end_to_end_length specifies the external length of the Insert from the end-one face to the end-two face. It may be specified as a single value or as a range of values.

NOTE See annex L for a discussion of attributes that may be assigned a single value or a range of values.

4.2.185. Inside_and_thickness

An Inside_and_thickness is a type of Piping_size_description (see **4.2.244**) that describes the size of a Piping_system_component (see **4.2.250**) or a Piping_connector (see **4.2.242**) using an actual (intended) inside diameter and wall thickness.

The data associated with an Inside_and_thickness are the following:

— inside_diameter;

— thickness.

4.2.185.1 inside_diameter

© ISO 2001 — All rights reserved

The inside_diameter specifies the actual (intended, not nominal) inside diameter of the Piping_system_component (see **4.2.250**) or Piping_connector (see **4.2.242**). It may be specified as a single value or as a range of values.

NOTE See annex L for a discussion of attributes that may be assigned a single value or a range of values.

4.2.185.2 thickness

The thickness specifies the minimum distance between the inside and outside piping wall surfaces required for the Piping_system_component (see **4.2.250**) or Piping_connector (see **4.2.242**). It may be specified as a single value or as a range of values.

NOTE See annex L for a discussion of attributes that may be assigned a single value or a range of values.

4.2.186. Inspection_condition

The Inspection_condition is a characteristic which shall be required to be attained for the inspection to be accomplished.

The data associated with an Inspection_condition are the following:

— condition_name;

— value.

4.2.186.1 condition_name

The condition_name specifies the characteristic that is being defined.

EXAMPLE "welding preheating temp" and "post heating temp" are inspection condition names.

4.2.186.2 value

The value specifies the specific quantity or alphanumeric qualifier for the characteristic that affects the inspection.

4.2.187. Installed_physical_design_view

An Installed_physical_design_view is an indication that the Plant_item (see **4.2.260**) described by a Physical_design_view (see **4.2.235**) is physically installed within the Plant (see **4.2.258**).

NOTE Within a usage of this part of ISO 10303, all Plant_items (see **4.2.260**) are considered as planned physical design views unless they are related to Installed_physical_design_view. This relationship indicates that the Plant_item is an actual item that currently exists or is installed in the Plant (see **4.2.258**).

The data associated with an Installed_physical_design_view are the following:

— serial_number.

The serial_number specifies a designation that uniquely identifies a particular physical Plant_item (see **4.2.260**) that is installed in a Plant (see **4.2.258**.

 © ISO 2001 — All rights reserved

NOTE The designation is typically assigned and affixed by the manufacturer of the Plant_item (see **4.2.260**).

4.2.188. Instrument

An Instrument is a type of Instrumentation_and_control_component (see **4.2.189**) that monitors one or more performance characteristics of a system. Each Instrument may be one of the following: an Inline_instrument (see **4.2.183**) or an Offline_instrument (see **4.2.224**).

The data associated with an Instrument are the following:

— instrument_type;

— sensor_type;

— signal_type;

— stream_interaction_type.

4.2.188.1 instrument_type

The instrument_type specifies a classification of an Instrument based on its performance characteristics.

EXAMPLE Examples of instrument_type classifications include flow control, level control, pressure, or temperature.

4.2.188.2 sensor_type

The sensor_type specifies a classification of an Instrument actuator based on its operational characteristics.

4.2.188.3 signal_type

The signal_type specifies a classification of an Instrument signal based on its physical characteristics.

EXAMPLE Examples of instrument signal_type classifications include electric and pneumatic.

4.2.188.4 stream_interaction_type

The stream_interaction_type specifies a classification of an Instrument based on how the sensor is positioned to sense the stream.

EXAMPLE Examples of stream_interaction_types include outside, inserted, and immersed.

4.2.189. Instrumentation_and_control_component

An Instrumentation_and_control_component is a type of Plant_item (see **4.2.260**) that is an individually identifiable item or combination of items that is part of the Instrumentation_and_control_system (see **4.2.190**). Each Instrumentation_and_control_-component may be an Instrument (see **4.2.188**).

© ISO 2001 — All rights reserved

EXAMPLE Examples of Instrumentation_and_control_component objects include wiring, switches, control valves, and gauges.

4.2.190. Instrumentation_and_control_system

An Instrumentation_and_control_system is a type of Plant_system (see **4.2.276**) that is a system of wiring, switches, controls, and other equipment associated with monitoring and controlling the performance characteristics of Plant_system objects.

The data associated with an Instrumentation_and_control_system are the following:

— type.

The type specifies a designation that classifies the Instrumentation_and_control_system based on the kind of service that it provides.

4.2.191. Insulation

An Insulation is a type of Plant_item (see **4.2.260**) that is a material or assembly of materials used to provide resistance to heat flow.

4.2.192. Interfering_shape_element

An Interfering_shape_element is the portion of the Plant_item_shape (see **4.2.273**) that is interfered with by a shape element of another Plant_item (see **4.2.260**).

NOTE This application object is intended to support design integration, specifically the need to identify the elements of the designs that physically interfere with one another.

The data associated with an Interfering_shape_element are the following:

— first_item;

— interference_colour;

— second_item.

4.2.192.1 first_item

The first_item specifies the plant_item_id of one of the Plant_items (see **4.2.260**) that is interfering.

4.2.192.2 interference_colour

The interference_colour specifies the colour that displays the element.

4.2.192.3 second_item

The second_item specifies the plant_item_id of one of the Plant_items(see **4.2.260**) that is interfering.

 © ISO 2001 — All rights reserved

4.2.193. Lap_joint_flange

A Lap_joint_flange is a type of Flange (see **4.2.119**) that has a rounded contour at the intersection of the bore and the Flange face in order to mate to a Lap_joint_stub_end (see **4.2.194**).

NOTE 1 This Flange (see **4.2.119**) can be swiveled around a Lap_joint_stub_end (see **4.2.194**) in order to align bolt holes.

NOTE 2 Figure 38 depicts a typical Lap_joint_flange.

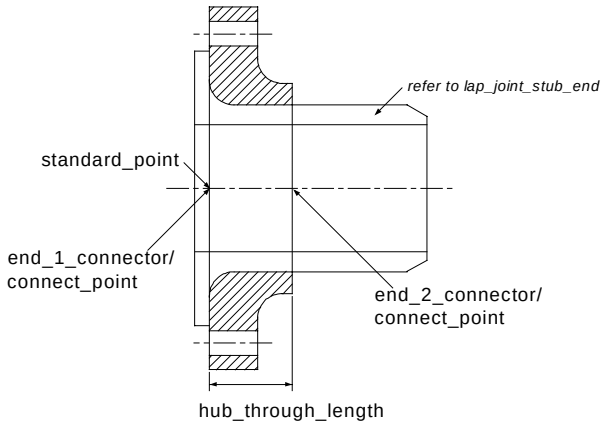

Figure 38 - Lap_joint_flange

4.2.194. Lap_joint_stub_end

A Lap_joint_stub_end is a type of Fitting (see **4.2.118**) used with a Lap_joint_flange (see **4.2.193**), consisting of a cylinder or barrel with an integral flat ring or lap around one end with a rounded contour at the external intersection of the barrel and the lap.

NOTE 1 Figure 39 depicts a typical Lap_joint_stub_end.

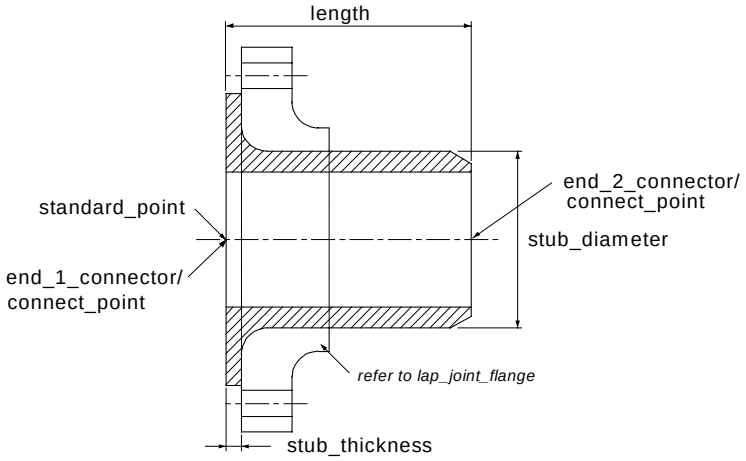

Figure 39 - Lap_joint_stub_end

© ISO 2001 — All rights reserved

NOTE 2 End two is beveled for butt welding to pipe. The lap face normally has a flat or concentric serrated finish. This surface serves as the raised-face gasket surface of the Flange (see **4.2.119**) in Lap_joint_flange (see **4.2.193**) connections.

The data associated with a Lap_joint_stub_end are the following:

— end_1_connector;

— end_2_connector;

— length;

— stub_diameter;

— stub_thickness.

4.2.194.1 end_1_connector

The end_1_connector specifies the Piping_connector (see **4.2.242**) at the stub end face that connects to another Flange (see **4.2.119**) or Nozzle (see **4.2.222**).

4.2.194.2 end_2_connector

The end_2_connector specifies the Piping_connector (see **4.2.242**) at the stub end face that connects to a non-flange Piping_component (see **4.2.240**).

4.2.194.3 length

The length specifies the external distance between the lap face and the other stub end face. It may be specified as a single value or as a range of values.

NOTE See annex L for a discussion of attributes that may be assigned a single value or a range of values.

4.2.194.4 stub_diameter

The stub_diameter specifies the nominal diameter of the Lap_joint_stub_end. It may be specified as a single value or as a range of values.

NOTE See annex L for a discussion of attributes that may be assigned a single value or a range of values.

4.2.194.5 stub_thickness

The stub_thickness specifies the distance between the inner and outer surfaces of the flared portion of the stub end. It may be specified as a single value or as a range of values.

NOTE See annex L for a discussion of attributes that may be assigned a single value or a range of values.

4.2.195. Lateral

A Lateral is a type of Fitting (see **4.2.118**) that is a three-way fitting having two ends opposite each other in a straight run and a branch outlet projecting from the run at an angle.

NOTE Figure 40 depicts a typical butt-weld Lateral.

 © ISO 2001 — All rights reserved

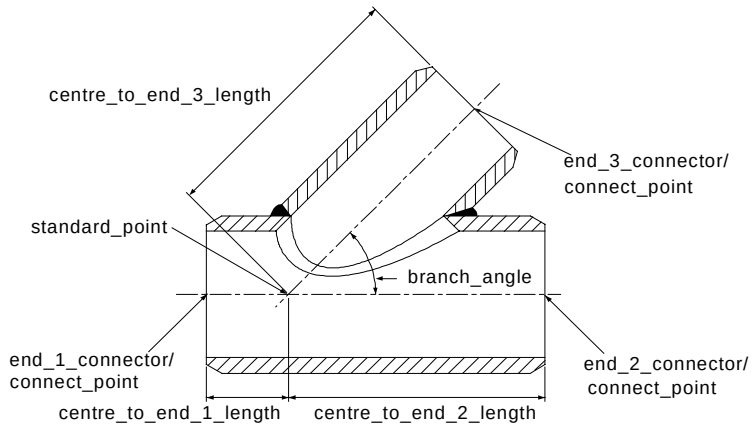

Figure 40 - Lateral

The data associated with a Lateral are the following:

— branch_angle;

— centre_to_end_1_length;

— centre_to_end_2_length;

— centre_to_end_3_length;

— end_1_connector;

— end_2_connector;

— end_3_connector.

4.2.195.1 branch_angle

The branch_angle specifies the angle that the branch projects from the straight run. It may be specified as a single value or as a range of values.

NOTE See annex L for a discussion of attributes that may be assigned a single value or a range of values.

4.2.195.2 centre_to_end_1_length

The centre_to_end_1_length specifies the distance between the point where the branch and straight run centrelines intersect and the straight-run face that is closest to the intersection. It may be specified as a single value or as a range of values.

NOTE See annex L for a discussion of attributes that may be assigned a single value or a range of values.

4.2.195.3 centre_to_end_2_length

The centre_to_end_2_length specifies the distance between the point where the branch and straight run centrelines intersect and the straight-run face that is furthest from the intersection. It may be specified as a single value or as a range of values.

NOTE See annex L for a discussion of attributes that may be assigned a single value or a range of values.

© ISO 2001 — All rights reserved

4.2.195.4 centre_to_end_3_length

The centre_to_end_3_length specifies the distance between the point where the branch and straight run centrelines intersect and the branch face. It may be specified as a single value or as a range of values.

NOTE See annex L for a discussion of attributes that may be assigned a single value or a range of values.

4.2.195.5 end_1_connector

The end_1_connector specifies the Piping_connector (see **4.2.242**) on the straight run that is closest to the intersection between the centrelines of the branch run and straight run.

4.2.195.6 end_2_connector

The end_2_connector specifies the Piping_connector (see **4.2.242**) on the straight run that is furthest from the intersection between the centrelines of the branch run and straight run.

4.2.195.7 end_3_connector

The end_3_connector specifies the Piping_connector (see **4.2.242**) that connects to the branch line.

4.2.196. Line

A Line is a type of Curve (see **4.2.85**) that is a one-dimensional, contiguous set of points that are positioned at a constant distance from a vector or that constitute the shortest distance between two points.

4.2.197. Line_branch_connection

A Line_branch_connection is a connection between the logical termination of one Piping_system_line_segment (see **4.2.252**) and a point on another Piping_system_line_segment other than a termination. The former Piping_system_line_segment branches from the latter Piping_system_line_segment.

The data associated with a Line_ branch_connection are the following:

— line_number.

The line_number specifies an alphanumeric identifier assigned to the Piping_system_line (see **4.2.251**) and can be used to uniquely define the Piping_system_line. Line_number is required for each Piping_system_line.

4.2.198. Line_branch_termination

A Line_branch_termination is a type of Piping_system_line_segment_termination (see **4.2.253**) that connects to a Piping_system_line_segment (see **4.2.252**) at a point other than a termination.

The data associated with a Line_ branch_termination are the following:

 © ISO 2001 — All rights reserved

— line_number.

The line_number specifies an alphanumeric identifier assigned to the Piping_system_line (see **4.2.251**) and can be used to uniquely define the Piping_system_line. Line_number is required for each Piping_system_line.

4.2.199. Line_less_piping_system

A Line_less_piping_system is a type of Piping_system (see **4.2.249**) that does not have a line designation as defined in Piping_system_line (see **4.2.251**).

4.2.200. Line_piping_system_component_assignment

A Line_piping_system_component_assignment is the relationship between a Piping_system_line (see **4.2.251**) and a Piping_system_component (see **4.2.250**) that is part of, or satisfies the need specified by, the Piping_system_line.

The data associated with a Line_ piping_system_component_assignment are the following:

— line_number.

The line_number specifies an alphanumeric identifier assigned to the Piping_system_line (see **4.2.251**) and can be used to uniquely define the Piping_system_line. Line_number is required for each Piping_system_line.

4.2.201. Line_plant_item_branch_connection

A Line_plant_item_branch_connection is a connection between a Line_plant_item_branch_-connector (see **4.2.202**) and a point on a Piping_system_line_segment (see **4.2.252**) other than a termination. The Line_plant_item_branch_connector branches from the Piping_system_line_-segment.

The data associated with a Line_plant_item_branch_connection are the following:

— branch_sequence_id;

— line_number.

4.2.201.1 branch_sequence_id

The branch_sequence_id specifies an alphanumeric identifier that indicates the order that branches extend from the main Piping_system_line_segment (see **4.2.252**).

4.2.201.2 line_number

The line_number specifies an alphanumeric identifier assigned to the Piping_system_line (see **4.2.251**) and can be used to uniquely define the Piping_system_line. Line_number is required for each Piping_system_line.

4.2.202. Line_plant_item_branch_connector

© ISO 2001 — All rights reserved

A Line_plant_item_branch_connector is a type of Functional_connector (see **4.2.128**) that participates in a Line_plant_item_branch_connection (see **4.2.201**).

4.2.203. Line_plant_item_connection

A Line_plant_item_connection is a connection between the logical termination of a Piping_system_line_segment (see **4.2.252**) and a Line_plant_item_connector (see **4.2.204**).

The data associated with a Line_ plant_item_connection are the following:

— line_number.

The line_number specifies an alphanumeric identifier assigned to the Piping_system_line (see **4.2.251**) and can be used to uniquely define the Piping_system_line. Line_number is required for each Piping_system_line.

4.2.204. Line_plant_item_connector

A Line_plant_item_connector is a type of Functional_connector (see **4.2.128**) that participates in a Line_plant_item_connection (see **4.2.203**).

4.2.205. Line_plant_item_termination

A Line_plant_item_termination is a type of Piping_system_line_segment_termination (see **4.2.253**) that connects to other Line_to_line_termination (see **4.2.207**) objects.

The data associated with a Line_ plant_item_termination are the following:

— line_number.

The line_number specifies an alphanumeric identifier assigned to the Piping_system_line (see **4.2.251**) and can be used to uniquely define the Piping_system_line. Line_number is required for each Piping_system_line.

4.2.206. Line_to_line_connection

A Line_to_line_connection is a connection between the logical terminations of two or more Piping_system_line_segment (see **4.2.252**) objects.

4.2.207. Line_to_line_termination

A Line_to_line_termination is a type of Piping_system_line_segment_termination (see **4.2.253**) that connects to other Line_to_line_termination objects.

The data associated with a Line_ to_line_termination are the following:

— line_number.

 © ISO 2001 — All rights reserved

The line_number specifies an alphanumeric identifier assigned to the Piping_system_line (see **4.2.251**) and can be used to uniquely define the Piping_system_line. Line_number is required for each Piping_system_line.

4.2.208. Lined_piping

A Lined_piping is a type of Piping _spool (see **4.2.246**) with coating material on the inner side.

The data associated with a Lined_piping are the following:

— lining_thickness_inside_pipe;

— lining_thickness_at_flange_face..

4.2.208.1 lining_thickness_inside_pipe

The lining_thickness_inside_pipe specifies the thickness of the coating material on the inner surface of the Piping_spool (see **4.2.246**).

4.2.208.2 lining_thickness_at_flange_face

The lining_thickness_at_flange_face specifies the thickness of the coating material on the connecting face of the Flange (see **4.2.119**) at the ends of the Piping_spool (see **4.2.246**) if the spool is terminated by a Flange.

4.2.209. Load_transference

A Load_transference is a type of Plant_item_connection (see **4.2.263**) that identifies the purpose or role of the connection as being the transfer of load or force.

4.2.210. Location_in_building

A Location_in_building is a type of Plant_item_location (see **4.2.272**) that is the position of the Plant_item (see **4.2.260**) relative to the Building (see **4.2.14**).

4.2.211. Location_in_plant

A Location_in_plant is a type of Plant_item_location (see **4.2.272**) that is the position of the Plant_item (see **4.2.260**) relative to the Plant (see **4.2.258**).

4.2.212. Location_in_site

A Location_in_site is a type of Plant_item_location (see **4.2.272**) that is the position of the Plant_item (see **4.2.260**) relative to the Site (see **4.2.313**).

4.2.213. Locked_orientation_connection

© ISO 2001 — All rights reserved

A Locked_orientation_connection is a type of Plant_item_connection (see **4.2.263**) in which two Plant_item_connector (see **4.2.265**) objects are in physical contact and there is no relative motion of the connected Plant_item (see **4.2.260**) objects with respect to each other.

NOTE A pump housing (containing the impeller and shaft) can be connected to the driver (motor) using a Locked_orientation_connection; this would mean that they move in unison.

4.2.214. Lug

The Lug is a type of Pipe_support (see **4.2.248**) that consists of a simple plate with a hole to be hanged by. The Lug without a hole is used to support the weight in a manner similar to the Trunnion (see **4.2.363**).

EXAMPLE A spring hanger with or without a hole.

The data associated with a Lug are the following:

— length.

The length specifies the distance between the tip of the Lug and the location_point.

4.2.215. Male_end

A Male_end is a type of Piping_connector (see **4.2.242**) end type that forms a compatible connection with a Female_end (see **4.2.116**).

The data associated with a Male_end are the following

— outer_end_preparation;

— inner_end_preparation.

4.2.215.1 outer_end_preparation

The outer_end_preparation specifies a description of the outer end of the connector that is necessary to prepare it for welding.

4.2.215.2 inner_end_preparation

The inner end_preparation specifies a description of the inner end of the connector that is necessary to prepare it for welding.

4.2.216. Manufacturing_line

A Manufacturing_line is a type of Plant (see **4.2.258**) that is defined by the type of product(s) it produces.

4.2.217. Material_specification_selection

 © ISO 2001 — All rights reserved

A Material_specification_selection is the candidate material specifications for piping system design. Each Material_specification_selection may be a Material_specification_subset_reference (see **4.2.218**).

The data associated with a Material_specification_selection are the following:

— description;

— material_specification_id;

— required_or_optional;

— selection_id;

— type.

EXAMPLE The material_specification_selection for a piping component would have a of type of "Stainless Steel", a material_specification_id of "ASTM (American Society for Testing and Materials) A403", a selection_id of "SS A316S", a description of "standard material callout", and be required.

4.2.217.1 description

The description specifies a textual explanation or summary of the selected material specification.

4.2.217.2 material_specification_id

The material_specification_id specifies a unique identifier for the material specification selected. Material_specification_id is required for each Material_specification_selection.

4.2.217.3 required_or_optional

The required_or_optional specifies whether the material specification is required or whether its use is optional.

4.2.217.4 selection_id

The selection_id specifies a unique identifier for the candidate material specification. Selection_id is required for each Material_specification_selection.

4.2.217.5 type

The type specifies a designation that classifies a Material_specification_selection based on selection criteria.

4.2.218. Material_specification_subset_reference

A Material_specification_subset_reference is a type of Material_specification_selection (see **4.2.217**) that is the reference parameters required to identify the applicable subset of a Required_material_description (see **4.2.299**).

The data associated with a Material_specification_subset_reference are the following:

— subset_id.

© ISO 2001 — All rights reserved

The subset_id specifies a unique identifier for the specified subset portion of a Required_material_description (see **4.2.299**). Subset_id is required for each Material_specification_subset_reference.

NOTE The subset reference is used when further subdivisions of the material specification selection are provided to allow for a more precise specification of the material.

4.2.219. Mitre_bend_pipe

A Mitre_bend_pipe is a type of Pipe (see **4.2.236**) that is a change in Pipe direction accomplished through the use of two or more straight sections of Pipe that are beveled and joined on a line bisecting the angle of junction.

NOTE Figure 41 depicts a typical Mitre_bend_pipe.

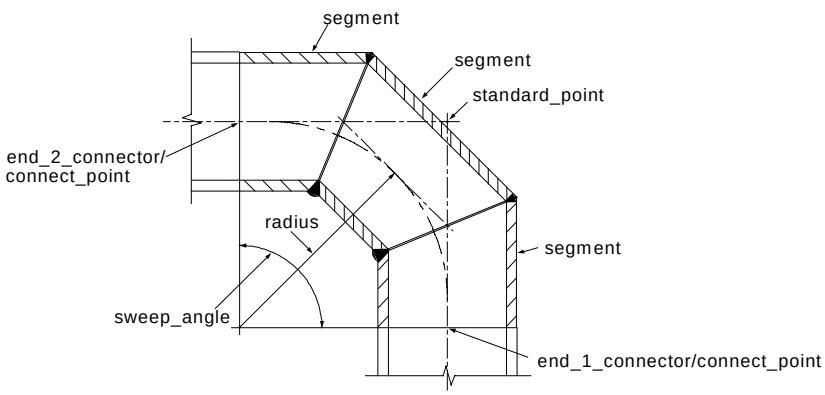

Figure 41 - Mitre_bend_pipe

The data associated with a Mitre_bend_pipe are the following:

— number_of_segments;

— radius;

— sweep_angle.

4.2.219.1 number_of_segments

The number_of_segments specifies the number of distinct straight sections of Pipe (see **4.2.236**) that constitute the Mitre_bend_pipe.

4.2.219.2 radius

The radius specifies the measure of the radius of curvature for a Mitre_bend_pipe. It may be specified as a single value or as a range of values.

NOTE See annex L for a discussion of attributes that may be assigned a single value or a range of values.

4.2.219.3 sweep_angle

 © ISO 2001 — All rights reserved

The sweep_angle specifies the angular measure at the centre of curvature from one end of the Mitre_bend_pipe to other. It may be specified as a single value or as a range of values.

NOTE See annex L for a discussion of attributes that may be assigned a single value or a range of values.

4.2.220. Nipple

A Nipple is a type of Pipe (see **4.2.236**) that is commonly acquired in prefabricated lengths and end preparations. Nipples are generally small in size in comparison to other pipes in a piping system.

NOTE Figure 42 depicts a typical Nipple.

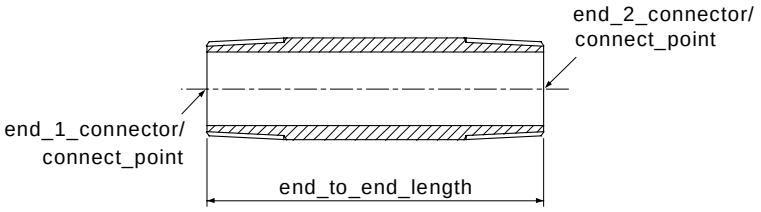

Figure 42 - Nipple

The data associated with a Nipple are the following

— end_to_end_length.

The end_to_end_length specifies the external distance between the end-one face and the end-two face of the nipple. It may be specified as a single value or as a range of values.

NOTE See annex L for a discussion of attributes that may be assigned a single value or a range of values.

4.2.221. Node

A Node is a Functional_connector (see 4.2.128) that defines the positional placement for physical components along a Route (see 4.2.302).

4.2.222. Nozzle

A Nozzle is a type of Plant_item (see **4.2.260**) that is designed to facilitate the connection of another Plant_item object to a piece of Equipment (see **4.2.104**). A Nozzle is generally permanently affixed to, and protrudes from, the Equipment item and is most commonly used to connect Piping_components (see **4.2.240**).

4.2.223. Nut

© ISO 2001 — All rights reserved

A Nut is a type of Bolt_and_nut_component (see **4.2.9**) that is used to fasten two or more Plant_items (see **4.2.260**) together. The Nut is an internally threaded fastener for Bolts (see **4.2.8**) or screws.

The data associated with a Nut are the following:

— nut_type.

The nut_type specifies a classification of the Nut based on its shape characteristics.

EXAMPLE Examples of nut_type designations include hexagon, hexagon_with_washer, and domed_cap.

4.2.224. Offline_instrument

An Offline_instrument is a type of Instrument (see **4.2.188**) that monitors the conditions of a system but is not an integral element of the system.

EXAMPLE Local panels, analyzer houses, junction box are examples of Offline_instruments.

4.2.225. Olet

An Olet is a type of Fitting (see **4.2.118**) welded onto a hole in the side of a Pipe (see **4.2.236**) or other Fitting.

NOTE 1 The primary use of an Olet is for making small branch connections or connecting Instrument (see **4.2.188**) lines to Piping_component (see **4.2.240**) objects.

NOTE 2 Figure 43 depicts a typical butt-welded latrolet, a kind of Olet.

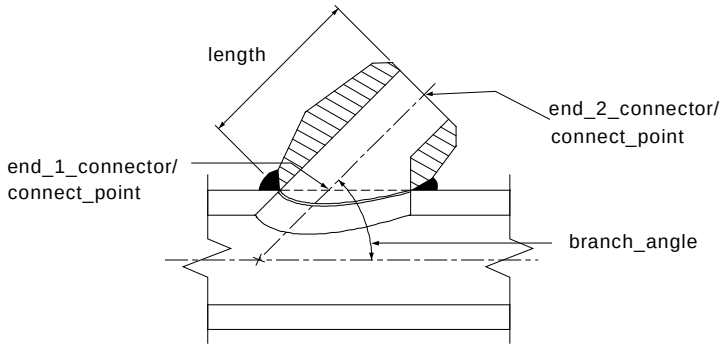

Figure 43 - Olet

EXAMPLE Other kinds of Olets include weldolets, sweepolets, elbowlets, and sockolets.

The data associated with an Olet are the following:

— base_outside_diameter;

— branch_angle;

 © ISO 2001 — All rights reserved

— end_1_connector;

— end_2_connector;

— length;

— skirt_outside_diameter.

4.2.225.1 base_outside_diameter

The base_outside_diameter specifies the external diameter of the Olet at the surface that mates with the straight-run Pipe (see **4.2.236**). It may be specified as a single value or as a range of values.

NOTE See annex L for a discussion of attributes that may be assigned a single value or a range of values.

4.2.225.2 branch_angle

The branch_angle specifies the angle that the branch projects from the straight run. It may be specified as a single value or as a range of values.

NOTE See annex L for a discussion of attributes that may be assigned a single value or a range of values.

4.2.225.3 end_1_connector

The end_1_connector specifies the Piping_connector (see **4.2.242**) that connects to the main Pipe (see **4.2.236**) or Fitting (see **4.2.118**).

4.2.225.4 end_2_connector

The end_2_connector specifies the Piping_connector (see **4.2.242**) that connects to the branch line.

4.2.225.5 length

The length specifies the distance between the end-one face and the end-two face at the centreline of the Olet. It may be specified as a single value or as a range of values.

NOTE See annex L for a discussion of attributes that may be assigned a single value or a range of values.

4.2.225.6 skirt_outside_diameter

The skirt_outside_diameter specifies the maximum external diameter of the Olet (measured perpendicular to the Olet centreline). It may be specified as a single value or as a range of values.

NOTE 1 See annex L for a discussion of attributes that may be assigned a single value or a range of values.

NOTE 2 The sides of an Olet are tapered (not vertical).

4.2.226. Orifice_flange

An Orifice_flange is a type of Flange (see **4.2.119**) used to assemble an Inline_instrument (see **4.2.183**) to meter the flow of liquids or gases in a pipe.

© ISO 2001 — All rights reserved

NOTE 1 Orifice_flange objects are used in pairs in conjunction with an Orifice_plate (see **4.2.227**).

NOTE 2 Figure 44 depicts a typical Orifice_flange and Orifice_plate (see **4.2.227**) configuration.

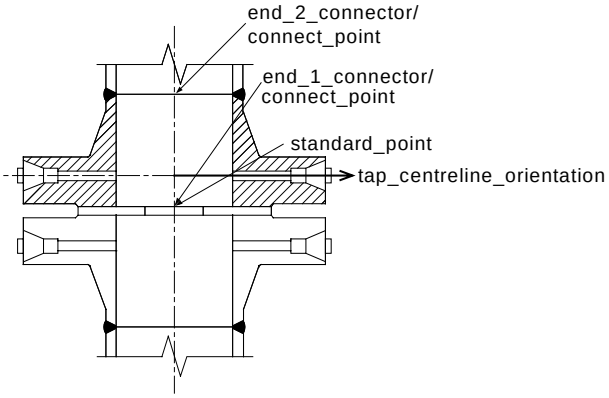

Figure 44 - Orifice_flange

The data associated with an Orifice_flange are the following:

— jacking_screw_orientation;

— tap;

— tap_centreline_orientation.

4.2.226.1 jacking_screw_orientation

The jacking_screw_orientation specifies the angular position of the threaded bolt holes in an Orifice_flange.

NOTE Jacking screws are used to separate the Orifice_flange objects sufficiently to remove or insert the Orifice_plate (see **4.2.227**).

4.2.226.2 tap

The tap specifies the Piping_connector (see **4.2.242**) designated as the tap.

4.2.226.3 tap_centreline_orientation

The tap_centreline_orientation specifies the orientation of the tap's centreline of the Orifice_flange. It is specified as direction values within the plant coordinate system.

4.2.227. Orifice_plate

An Orifice_plate is a type of Fitting (see **4.2.118**) that is a disk with a calibrated hole that is placed in a Pipe (see **4.2.236**) to measure flow.

NOTE Figure 45 depicts a typical Orifice_plate.

 © ISO 2001 — All rights reserved

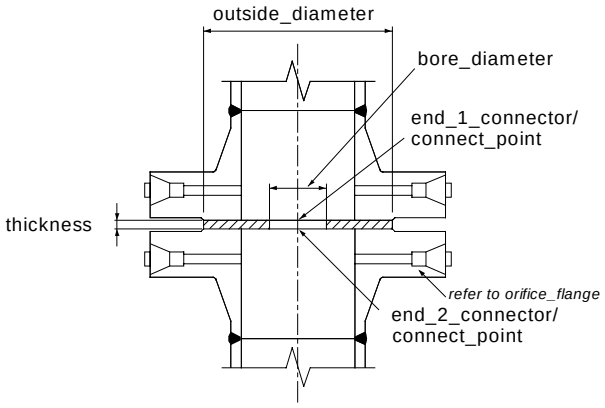

Figure 45 - Orifice_plate

The data associated with an Orifice_plate are the following:

— beta_ratio;

— bore_diameter;

— outside_diameter;

— thickness.

4.2.227.1 beta_ratio

The beta_ratio is defined as the diameter of the hole in the Orifice_plate divided by the inside diameter of the Pipe (see **4.2.236**).

4.2.227.2 bore_diameter

The bore_diameter specifies the diameter of the hole in the Orifice_plate. It may be specified as a single value or as a range of values.

NOTE See annex L for a discussion of attributes that may be assigned a single value or a range of values.

4.2.227.3 outside_diameter

The outside_diameter specifies the external diameter of the Orifice_plate. It may be specified as a single value or as a range of values.

NOTE See annex L for a discussion of attributes that may be assigned a single value or a range of values.

4.2.227.4 thickness

The thickness specifies the perpendicular distance between the two faces of the Orifice_plate. It may be specified as a single value or as a range of values.

NOTE See annex L for a discussion of attributes that may be assigned a single value or a range of values.

4.2.228. Outline_shape

© ISO 2001 — All rights reserved

An Outline_shape is a type of Shape_representation (see **4.2.309**) that is a 3D spatial volume that corresponds to the bounding surface features of a Plant_item (see **4.2.260**).

NOTE Contrast with Detail_shape (see **4.2.88**) and Envelope_shape (see **4.2.103**). An Outline_shape is a simple geometric representation of Plant_item (see **4.2.260**); this representation may be called a cartoon. The representation is a more accurate representation of the shape of the Plant_item than that provided by an Envelope_shape, but not nearly as precise as a Detailed_shape.

4.2.229. Outside_and_thickness

An Outside_and_thickness is a type of Piping_size_description (see **4.2.244**) that describes the size by providing the outside diameter and thickness values.

The data associated with an Outside_and_thickness are the following:

— outside_diameter;

— thickness.

4.2.229.1 outside_diameter

The outside_diameter specifies the external diameter of the Piping_system_component (see **4.2.250**) or Piping_connector (see **4.2.242**). It may be specified as a single value or as a range of values.

NOTE See annex L for a discussion of attributes that may be assigned a single value or a range of values.

4.2.229.2 thickness

The thickness specifies the minimum distance between the inside and outside piping wall surfaces of the Piping_system_component (see **4.2.250**) or Piping_connector (see **4.2.242**). It may be specified as a single value or as a range of values.

NOTE See annex L for a discussion of attributes that may be assigned a single value or a range of values.

4.2.230. Paddle_blank

A Paddle_blank is a type of Blank (see **4.2.5**) that reserves space between two Flange (see **4.2.119**) objects and blocks the flow of material.

NOTE A Paddle_blank has a handle that permits removal or repositioning of the Paddle_blank. The name is derived from the fact that the Paddle_blank looks like a ping pong paddle.

The data associated with a Paddle_blank are the following:

— paddle_length;

— paddle_width.

4.2.230.1 paddle_length

 © ISO 2001 — All rights reserved

The paddle_length specifies the length of the handle on the Paddle_blank. It may be specified as a single value or as a range of values.

NOTE 1 The length is measured from the outside diameter of the Blank (see **4.2.5**).

NOTE 2 See annex L for a discussion of attributes that may be assigned a single value or a range of values.

4.2.230.2 paddle_width

The paddle_width specifies the width of the handle on the Paddle_blank. It may be specified as a single value or as a range of values.

NOTE 1 See annex L for a discussion of attributes that may be assigned a single value or a range of values.

NOTE 2 Figure 46 depicts a typical Paddle_blank.

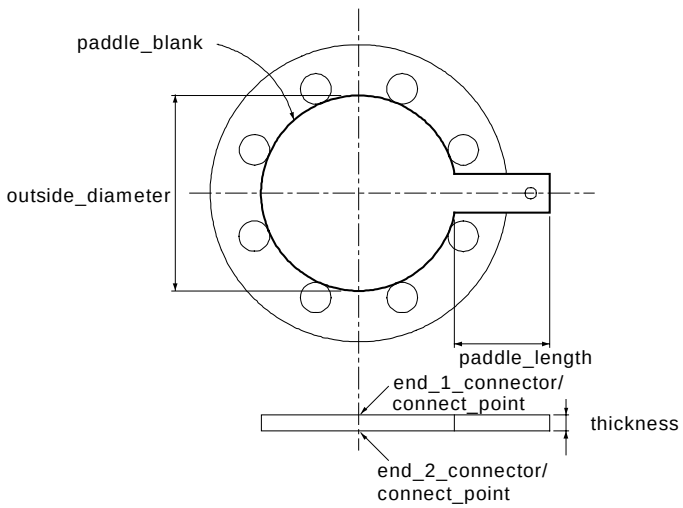

Figure 46 - Paddle_blank

4.2.231. Paddle_spacer

A Paddle_spacer is a type of Spacer (see **4.2.322**) that reserves space between two Flange (see **4.2.119**) objects and permits flow through the Pipe (see **4.2.236**).

NOTE 1 A Paddle_spacer has a handle that permits its removal or repositioning. The inner diameter of the Paddle_spacer may be less than the diameter of the Pipe (see **4.2.236**), thus altering flow.

NOTE 2 Figure 47 depicts a typical Paddle_spacer.

© ISO 2001 — All rights reserved

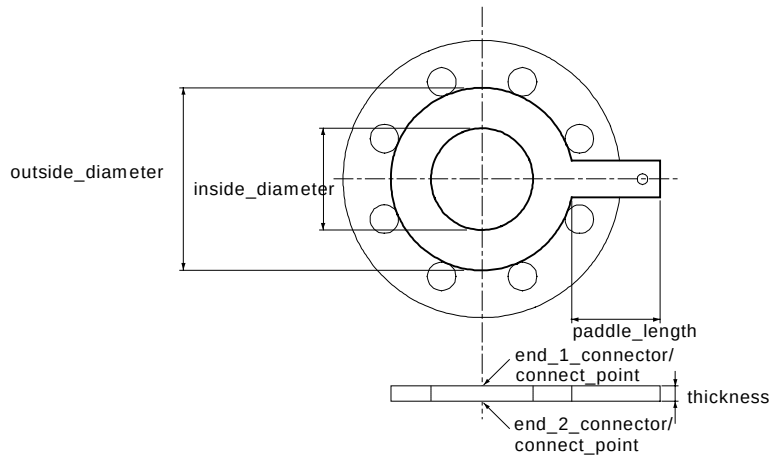

Figure 47 - Paddle_spacer

The data associated with a Paddle_spacer are the following:

— inside_diameter;

— paddle_length;

— paddle_width.

4.2.231.1 inside_diameter

The inside_diameter specifies the diameter of the bore hole through the Paddle_spacer. It may be specified as a single value or as a range of values.

NOTE See annex L for a discussion of attributes that may be assigned a single value or a range of values.

4.2.231.2 paddle_length

The paddle_length specifies the length of the handle of the Paddle_spacer. It may be specified as a single value or as a range of values.

NOTE 1 The length is measured from the outside diameter of the Paddle_spacer.

NOTE 2 See annex L for a discussion of attributes that may be assigned a single value or a range of values.

4.2.231.3 paddle_width

The paddle_width specifies the width of the handle of the Paddle_spacer. It may be specified as a single value or as a range of values.

NOTE See annex L for a discussion of attributes that may be assigned a single value or a range of values.

4.2.232. Perforated_cap

A Perforated_cap is a type of Cap (see **4.2.25**) with a hole on its closing surface.

 © ISO 2001 — All rights reserved

NOTE Figure 48 depicts a typical Perforated_cap.

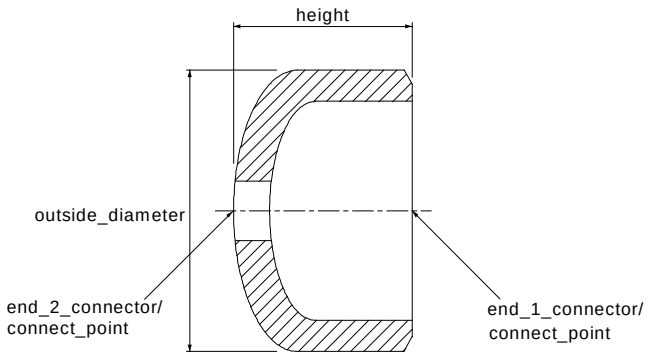

Figure 48 - Perforated_cap

The data associated with a Perforated_cap are the following:

— end_2_connector;

— hole_diameter.

4.2.232.1 end_2_connector

The end_2_connector specifies the Piping_connector (see **4.2.242**) where the inside Pipe (see **4.2.236**) of the jacketed piping connects to the Perforated_cap.

4.2.232.2 hole_diameter

The hole_diameter is the diameter of the hole in the Perforated_cap.

4.2.233. Perforated_plate

A Perforated_plate is a type of Plate (see **4.2.279**) with a hole on its surface.

The data associated with a Perforated_plate are the following:

— end_2_connector;

— hole_diameter.

4.2.233.1 end_2_connector

The end_2_connector specifies the Piping_connector (see **4.2.242**) where the inside Pipe (see **4.2.236**) of the jacketed piping connects to the Perforated_plate.

4.2.233.2 hole_diameter

The hole_diameter is the diameter of the hole in the Perforated_plate.

© ISO 2001 — All rights reserved

4.2.234. Physical_connector

A Physical_connector is a type of Plant_item_connector_occurrence (see **4.2.266**) that represents the physical aspects of the Plant_item_connector_occurrence.

4.2.235. Physical_design_view

A Physical_design_view is a type of Plant_item_design_view (see **4.2.268**) that describes the physical and spatial characteristics of a Plant_item (see **4.2.260**).

4.2.236. Pipe

A Pipe is a type of Piping_component (see **4.2.240**) that is a hollow cylindrical conveyance, with a constant radius for the cross-sectional circle, for directing fluid, vapour, or particulate flow. Each Pipe may be one of the following: a Mitre_bend_pipe (see **4.2.219**), a Nipple (see **4.2.220**), a Straight_pipe (see **4.2.332**), or a Swept_bend_pipe (see **4.2.349**).

NOTE 1 In most cases, the Pipe will conform to the dimensional requirements for nominal pipe size as tabulated in national standards such as American National Standards Institute (ANSI) B36.10 and ANSI B36.19.

NOTE 2 This definition does not exclude tubing and flex hoses from consideration as Pipe.

The data associated with a Pipe are the following:

— additional_length;

— end_1_connector;

— end_2_connector.

4.2.236.1 additional_length

The additional_length specifies the length of Pipe that is extended from the designed length of the Pipe to allow for installation error.

4.2.236.2 end_1_connector

The end_1_connector specifies the Piping_connector (see **4.2.242**) that connects to one end of the Pipe.

4.2.236.3 end_2_connector

The end_2_connector specifies the Piping_connector (see **4.2.242**) that connects to the other end of the Pipe.

4.2.237. Pipe_closure

 © ISO 2001 — All rights reserved

A Pipe_closure is a type of Fitting (see **4.2.118**) used to close an end of a Piping_component (see **4.2.240**).

Each Pipe_closure may be one of the following: Cap (see **4.2.25**), Plug (see **4.2.280**), or Plate (see **4.2.279**).

NOTE 1 Blind_flange (see 4.2.6) objects also perform the function of closing a Piping_-system (see 4.2.249). However, industry terminology treats them differently and they have been defined as separate objects.

NOTE 2 Figure 49 depicts a typical butt-weld Pipe Cap, which is a kind of Pipe_closure.

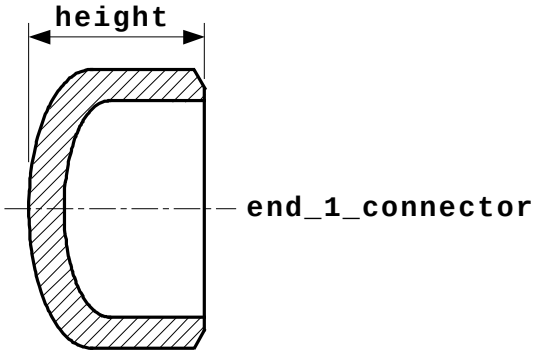

Figure 49 - Butt-weld Pipe Cap

The data associated with a Pipe_closure are the following:

— end_1_connector;

— shape_type.

4.2.237.1 end_1_connector

The end_1_connector specifies the Piping_connector (see **4.2.242**) that connects to the Pipe (see **4.2.236**).

4.2.237.2 shape_type

The shape_type is a type of Shape_representation (see **4.2.309**).

4.2.238. Piping_assembly

A Piping_assembly is an assembled collection of piping Plant_item (see **4.2.260**) objects.

The data associated with a Piping_assembly are the following:

— piping_assembly_number.

© ISO 2001 — All rights reserved

The piping_assembly_number specifies an alphanumeric identifier assigned to the Piping_assembly.

NOTE A Piping_asembly may be defined to meet transportation, fabrication, or erection requirements.

4.2.239. Piping_assembly_assignment

A Piping_assembly_assignment is the identification of the Piping_assembly (see **4.2.238**) that a Piping_component (see **4.2.240**) belongs to.

4.2.240. Piping_component

A Piping_component is a type of Piping_system_component (see **4.2.250**) whose primary function is the conveyance or control of fluid flow. Each Piping_component may be one of the following: a Fitting (see **4.2.118**), a Pipe (see **4.2.236**), or a Valve (see **4.2.367**).

The data associated with a Piping_component are the following:

— pmi_record;

— side_connector;

— standard_point;

— mill_sheet_number.

4.2.240.1 pmi_record

The pmi_record attribute specifies an identifier of the positive material identification document for a Piping_component.

4.2.240.2 side_connector

The side_connector specifies the Piping_connector (see **4.2.242**) that is located between the two ends of the Piping_component. There may be more than one side_connector for a Piping_component.

4.2.240.3 standard_point

The standard_point specifies an x, y, z coordinate position defined for the Piping_component that will position the Piping_component in the Plant (see **4.2.258**) when overlayed on the Node (see **4.2.221**).

4.2.240.4 mill_sheet_number

The mill_sheet_number specifies an identifier of the document that comes from the mill providing a record of the raw material that comprises the Piping_component.

 © ISO 2001 — All rights reserved

4.2.241. Piping_component_inspection_record

A Piping_component_inspection_record is a collection of information that captures the result of an evaluation of an observed value for a characteristic of a Piping_component (see **4.2.240**) against an expected, designed or prescribed value for that characteristic, as well as information to evaluate the acceptability of the observed value.

The data associated with a Piping_component_inspection_record are the following:

— inspected_property_name;

— inspected_property_tolerance;

— inspected_property_measured_value.

4.2.241.1 inspected_property_name

The inspected_property_name specifies the characteristic for which information is being recorded. The inspected_property_name may be one of the following:

— branch angle;
— flange face type;
— threaded type;
— end preparation shape;
— flange inside diameter dimension;
— flat side orientation;
— hole straddle centreline orientation;
— hub inside diameter dimension;
— hub outside diameter dimension;
— hub weld point diameter dimension;
— hub weld point thickness dimension;
— inside diameter dimension;
— longitudinal welding seam orientation;
— nominal size;
— pipe schedule;
— pressure rating;
— weld point outside diameter dimension;
— weld point thickness dimension;
— weld point inside diameter dimension;
— stand off dimension;
— centreline radius dimension;
— outside diameter dimension;
— thickness dimension;
— swept angle;
— ovality;
— tap orientation;
— paddle orientation.

4.2.241.2 inspected_property_tolerance

The inspected_property_tolerance specifies the acceptable deviation for the measured result of the inspection.

© ISO 2001 — All rights reserved

4.2.241.3 inspected_property_measured_value

The inspected_property_measured_value specifies the recorded result of the inspection.

4.2.242. Piping_connector

A Piping_connector is a type of Plant_item_connector (see **4.2.265**) that is intended to establish a material flow connection between two Plant_item (see **4.2.260**) objects. Each Piping_connector may be one of the following: a Buttweld (see **4.2.16**), a Clamped (see **4.2.63**) a Flanged (see **4.2.120**), a Pressure_fit (see **4.2.285**), a Socket (see **4.2.319**), a Stub_in (see **4.2.338**), or a Threaded (see **4.2.352**). The end_type of each Piping_connector may be one of the following: a Branch_hole (see **4.2.12**), a Female_end (see **4.2.116**), a Flanged_end (see **4.2.121**), a Flared_end (see **4.2.122**), a Grooved_end (see **4.2.137**), or a Male_end (see **4.2.215**).

The data associated with a Piping_connector are the following:

— connector_flow_direction;

— connector_specification;

— name.

4.2.242.1 connector_flow_direction

The connector_flow_direction specifies an indication of the way process fluid moves past the Plant_item (see **4.2.260**).

4.2.242.2 connector_specification

The connector_specification identifies the specification associated with the Piping_connector. There may be more than one connector_specification for a Piping_connector.

EXAMPLE Examples of the identified connector_specification include insulation specification, end preparation specification, and thread specification.

4.2.242.3 name

The name specifies a textual label given to the Piping_connector.

4.2.243. Piping_connector_service_characteristic

A Piping_connector_service_characteristic is the conditions that the Piping_connector (see **4.2.242**) is designed to withstand.

The data associated with a Piping_connector_service_characteristic are the following:

— design_pressure;

— design_temperature.

4.2.243.1 design_pressure

 © ISO 2001 — All rights reserved

The design_pressure specifies the maximum allowable pressure at the Piping_connector (see **4.2.242**). It may be specified as a single value or as a range of values.

NOTE 1 This value is normally created as part of doing 3D analysis of the piping system design.

NOTE 2 See annex L for a discussion of attributes that may be assigned a single value or a range of values.

4.2.243.2 design_temperature

The design_temperature specifies the maximum allowable temperature at the Piping_connector (see **4.2.242**). It may be specified as a single value or as a range of values.

NOTE 1 This value is normally created as part of doing 3D analysis of the piping system design.

NOTE 2 See annex L for a discussion of attributes that may be assigned a single value or a range of values.

4.2.244. Piping_size_description

A Piping_size_description is used to explain or summarize the physical size of a Piping_-connector (see **4.2.242**) or Piping_system_component (see **4.2.250**), based on a set of dimensional characteristics, and an optional dimensional standard. Each Piping_size_description is either an Inside_and_thickness (see **4.2.185**), an Outside_and_thickness (see **4.2.229**), a Pressure_class (see **4.2.284**), or a Schedule (see **4.2.303**).

NOTE A Piping_size_description is used to specify the size of a Piping_component (see **4.2.240**) as a whole (where the size is constant over the extant of the component) or to each individual connector of the Piping_component (where the sizes of each different connector differ.)

The data associated with a Piping_size_description are the following:

— dimensional_standard;

— ovality_allowance.

4.2.244.1 dimensional_standard

The dimensional_standard specifies a designation for the standard used to dimension the Pipe (see **4.2.236**). The dimensional_standard need not be specified for a particular Piping_size_-description.

EXAMPLE Examples of dimensional_standard designations include ANSI and DIN.

4.2.244.2 ovality_allowance

The ovality_allowance specifies the acceptable deviation or tolerance allowed in the `out-of-roundness' of the Piping_connector (see **4.2.242**) or Piping_system_component (see **4.2.250**). In other words, it specifies how much the Piping_connector or Piping_system_component can deviate from a perfect circle. The ovality_allowance need not be specified for a particular Piping_size_description.

4.2.245. Piping_specification

© ISO 2001 — All rights reserved

A Piping_specification is a specification of conditions such as pressure, material, and corrosion allowance that must be met in a Piping_system_line_segment (see **4.2.252**) and may include a list of Piping_component (see **4.2.240**) objects by size range that meet these conditions.

NOTE The Piping_specification is used in Spec-driven design, where the user specifies the size and component type, and the Piping_specification is used to look-up the correct component characteristics. The components listed in the Piping_specification may reference component catalogues.

The data associated with a Piping_specification are the following:

— name;

— owner;

— piping_specification_id;

— service_description.

4.2.245.1 name

The name specifies a textual label given to the Piping_specification.

4.2.245.2 owner

The owner specifies the designation given to the person or organization that created and maintains the Piping_specification.

4.2.245.3 piping_specification_id

The piping_specification_id specifies a unique identifier for the Piping_specification. Piping_specification_id is required for each Piping_specification.

4.2.245.4 service_description

The service_description specifies a textual explanation or summary of the process stream conditions that are supported by the Plant_item (see **4.2.260**) objects described in the Piping_-specification.

4.2.246. Piping_spool

A Piping_spool is a collection of piping Plant_item (see **4.2.260**) objects.

A Piping_spool is an assembly of Piping_components (see **4.2.240**) and applicable Plant_items (see **4.2.260**) such as Piping_support (see **4.2.248**) attachment to be shop fabricated and physically connected into one item.

The data associated with a Piping_spool are the following:

— tag_number;

— piping_type;

 © ISO 2001 — All rights reserved

— temporary_flag.

4.2.246.1 tag_number

The tag_number is a unique identification of the Piping_spool.

4.2.246.2 piping_type

The piping_type specifies whether a Piping_spool is comprised of single or jacketed piping. The value of piping_type is one of the following:

— jacketed

— single

4.2.246.2.1 jacketed

Jacketed Piping_spool has inner piping and outer piping.

4.2.246.2.2 single

A single Piping_spool has no jacket.

4.2.246.3 temporary_flag

The temporary flag specifies whether the Piping_spool is a temporary spool, usually having flanged connectors, that is to be replaced with a different Piping_component (see **4.2.240**) at some point in the construction of the Plant (see **4.2.258**).

4.2.247. Piping_spool_inspection_record

A Piping_spool_inspection_record is a collection of information that captures the result of an evaluation of an observed value for a characteristic of a Piping_spool (see **4.2.246**) against an expected, designed or prescribed value for that characteristic, as well as information to evaluate the acceptability of the observed value.

The data associated with a Piping_spool_inspection_record are the following

— inspected_preoperty_name;

— inspected_property_tolerance;

— inspected_property_measured_value.

4.2.247.1 inspected_property_name

The inspected_property_name specifies the characteristic for which information is being recorded. The inspected_property_name may be one of the following:

— piping spool configuration inspection;
— pressure test;
— leak test;

© ISO 2001 — All rights reserved

— visual examination;
— surface painting;
— marking;
— packed figure;
— end protection;
— high voltage for pin hole detective;
— lining thickness.

4.2.247.2 inspected_property_tolerance

The inspected_property_tolerance specifies the acceptable deviation for the measured result of the inspection.

4.2.247.3 inspected_property_measured_value

The inspected_property_measured_value specifies the recorded result of the inspection.

4.2.248. Piping_support

A Piping_support is a type of Support_component (see **4.2.343**) that is fabricated onto the pipe, and supports the Piping_spool (see **4.2.246**) when it is installed into the Plant (see **4.2.258**).

The data associated with a Piping_support are the following:

— end_1_connector;

— location_point;

— orientation.

4.2.248.1 end_1_connector

The end_1_connector specifies the Piping_connector (see **4.2.242**) on the Piping_support to the pipe.

4.2.248.2 location_point

The location_point is a standard point on Piping_component (see **4.2.240**) at which the Piping_support is attached.

EXAMPLE When a Base_elbow_support (see 4.2.3) is attached to an Elbow (see 4.2.98), the location_point is the centre of the Elbow, where the centrelines of two arms of Elbow intersect.
When a Base_line_support (see 4.2.4) is attached to a Straight_pipe (see 4.2.332), the location_point is the intersection of the centrelines of the Straight_pipe and the main body of the Base_line_support.

4.2.248.3 orientation

 © ISO 2001 — All rights reserved

The orientation specifies a unit vector in the direction of the main part of the Piping_support. The vector defines the layout of the Piping_support.

4.2.248.4 piping support types

Necessary information for piping shop fabrication: type, location point, orientation and dimensional parameters. Types of Piping_supports include: Base_elbow_support (Adjustable and Non-adjustable) (see **4.2.3**), Base_line_support (see **4.2.4**), Dummy_leg (see **4.2.92**), Eccentric_base_elbow_support (see **4.2.93**), Lug (see **4.2.214**), Shoe (see **4.2.312**), Stopper (see **4.2.331**), and Trunnion (see **4.2.363**).

4.2.249. Piping_system

A Piping_system is a type of Plant_system (see **4.2.276**) that is a system of interconnected Plant_item (see **4.2.260**) objects that convey fluid, vapour, or particulate flow throughout a plant. Each Piping_system may be a Line_less_piping_system (see **4.2.199**).

EXAMPLE Methods of flow conveyance through the Piping_system include mechanical, gravitational, and electromagnetic induction.

The data associated with a Piping_system are the following:

— code;

— description.

4.2.249.1 code

The code specifies the name of the specification that the Piping_system needs to conform to.

4.2.249.2 description

The description specifies a textual explanation or summary of the Piping_system.

4.2.250. Piping_system_component

A Piping_system_component is a type of Plant_item (see **4.2.260**) that is a constituent element of a Piping_system (see **4.2.249**). Each Piping_system_component may be one of the following: an Inline_equipment (see **4.2.182**), an Inline_instrument (see **4.2.183**), a Piping_component (see **4.2.240**), a Process_ducting (see **4.2.286**), or a Specialty_item (see **4.2.324**).

The data associated with a Piping_system_component are the following:

— coating_reference;

— corrosion_allowance;

— heat_tracing_type;

— lining.

4.2.250.1 coating_reference

© ISO 2001 — All rights reserved

The coating_reference specifies a reference to the specification of the substances used to coat the surfaces of a Piping_system_component. For a given Piping_system_component, the value of this attribute overrides any global specification.

4.2.250.2 corrosion_allowance

The corrosion_allowance specifies the depth that corrosion may encroach below the surface of a Piping_system_component before action is required. For a given Piping_system_component, the value of this attribute overrides any global specification. It may be specified as a single value or as a range of values.

NOTE See annex L for a discussion of attributes that may be assigned a single value or a range of values. The depth of the corrosion may vary over the extent of the Piping_component (see **4.2.240**).

4.2.250.3 heat_tracing_type

The heat_tracing_type specifies the means utilized to impart a temperature increase to the Piping_system_component by an external wrapping or coiling. For a given Piping_system_component, the value of this attribute overrides any global specification.

NOTE Types may include electrical or steam.

4.2.250.4 lining

The lining specifies a description of the substances used to line the internal surfaces of a Piping_system_component.

4.2.251. Piping_system_line

A Piping_system_line is a logical component of a Piping_system (see **4.2.249**) and is composed of a collection of interconnected Piping_system_line_segment (see **4.2.252**) objects.

The data associated with a Piping_system_line are the following:

— line_number;

— P_and_I_reference.

4.2.251.1 line_number

The line_number specifies an alphanumeric identifier assigned to the Piping_system_line and can be used to uniquely define the Piping_system_line. Line_number is required for each Piping_system_line.

EXAMPLE A1A-PX-100-4-150, is a coded number that identifies the Piping_system_line and the main design criteria - specification = A1A, process = PX, line number = 100, line size = 4, and pressure rating = 150.

4.2.251.2 P_and_I_reference

 © ISO 2001 — All rights reserved

The P_and_I_reference specifies the piping and instrumentation diagram that depicts the Piping_system_line.

4.2.252. Piping_system_line_segment

A Piping_system_line_segment is an element of a Piping_system_line (see **4.2.251**). A Piping_system_line_segment terminates at a functional Plant_item_connector (see **4.2.265**), a tap into a Piping_system_line, a point where the stream diverges or converges, a vent, or a drain.

The data associated with a Piping_system_line_segment are the following:

— coating_reference;

— corrosion_allowance;

— design_pressure;

— design_temperature;

— elevation;

— heat_tracing_type;

— line_number;

— line_size.

4.2.252.1 coating_reference

The coating_reference specifies a reference to the specification that details the coating requirements of the Piping_component (see **4.2.240**) objects associated with the Piping_system_-line (see **4.2.251**).

4.2.252.2 corrosion_allowance

The corrosion_allowance specifies the depth that corrosion may encroach below the surface of components on a Piping_system_line_segment before action is required. For a given Piping_system_component (see **4.2.250**), the value of this attribute overrides any global specification.

4.2.252.3 design_pressure

The design_pressure specifies the requirement for maximum allowable pressure of the Piping_component (see **4.2.240**) objects associated with the Piping_system_line (see **4.2.251**).

4.2.252.4 design_temperature

The design_temperature specifies the requirement for maximum allowable temperature of the Piping_component (see **4.2.240**) objects associated with the Piping_system_line (see **4.2.251**).

4.2.252.5 elevation

© ISO 2001 — All rights reserved

The elevation specifies the distance above sea level that the piping assigned to the line should exist.

4.2.252.6 heat_tracing_type

The heat_tracing_type specifies the heating method used to maintain temperature in the Piping_system_line (see **4.2.251**).

EXAMPLE Heating method designations include steam tracing and electrical.

4.2.252.7 line_number

The line_number specifies an alphanumeric identifier assigned to the Piping_system_line (see **4.2.251**) and can be used to uniquely define the Piping_system_line. Line_number is required for each Piping_system_line.

4.2.252.8 line_size

The line_size specifies the intended diameter of the piping to be selected to satisfy the Piping_system_line (see **4.2.251**). The line_size need not be specified for a particular Piping_system_line_segment where the Piping_system_line_segment corresponds to one Piping_system_component (see **4.2.250**).

NOTE When the line_size is not specified, it is either ambiguous due to the nature of the Piping_system_component (see **4.2.250**) such as a Reducer (see **4.2.292**), or derivable from one or more of the connecting Piping_system_line_segments.

4.2.253. Piping_system_line_segment_termination

A Piping_system_line_segment_termination is one of two logical end-points of a Piping_system_line_segment (see **4.2.252**). Each Piping_system_line_segment_termination is either: a Line_branch_termination (see **4.2.198**), a Line_to_line_termination (see **4.2.207**), a Line_plant_item_termination (see **4.2.205**), or Piping_system_line_termination (see **4.2.254**).

NOTE Piping_system_line (see **4.2.251**) objects are composed of individual Piping_system_line_segment (see **4.2.252**) objects. Piping_system_line_segment objects are connected through Piping_system_line_segment_termination objects.

The data associated with a Piping_system_line_segment_termination are the following:

— flow_direction;

— line_number.

4.2.253.1 flow_direction

The flow_direction specifies the direction of material flow at the Piping_system_line_segment_termination. The value of the flow_direction attribute shall be one of the following:

— both;

 © ISO 2001 — All rights reserved

— in;

— not_specified;

— out.

4.2.253.1.1 both: material may flow in either direction past the Piping_system_line_segment_termination.

4.2.253.1.2 in: material flows into the line segment past the Piping_system_line_segment_termination.

4.2.253.1.3 not_specified: the direction of material flow past the Piping_system_line_segment_termination is not specified.

4.2.253.1.4 out: material flows out of the line segment past the Piping_system_line_segment_termination.

4.2.253.2 line_number

The line_number specifies an alphanumeric identifier assigned to the Piping_system_line (see **4.2.251**) and can be used to uniquely define the Piping_system_line. Line_number is required for each Piping_system_line.

4.2.254. Piping_system_line_termination

A Piping_system_line_termination is a type of Piping_system_line_segment_termination (see **4.2.253**) that begins or ends a Piping_system_line (see **4.2.251**).

The data associated with a Piping_system_line_termination are the following:

— location;

— position_on_pipe;

— start_or_end.

4.2.254.1 location

The location specifies the relative distance in the X, Y, Z directions of the position of the end of the Piping_system_line (see **4.2.251**), from the plant origin. The location position may also be defined by where it connects to an upstream piece of Equipment (see **4.2.104**) or Piping_system_line.

4.2.254.2 position_on_pipe

The position_on_pipe specifies an indicator of the relationship between the point and the Piping_component (see **4.2.240**) that will eventually satisfy it.

NOTE If the indicator is not specified, the assumed value is Centre Of Pipe (COP).

© ISO 2001 — All rights reserved

EXAMPLE A position_on_pipe may be COP or BOP indicating that the location of the Piping_system_line_termination location is on the centre or bottom of the pipe.

4.2.254.3 start_or_end

The start_or_end specifies an enumerated value that defines the side of the pipe on which the line termination lies. A value of 'start' indicates the line termination is on the upstream end, and a value of 'end' indicates that the line termination is on the downstream end.

4.2.255. Plain_washer

A Plain_washer is a type of Washer (see **4.2.369**). The shape of the Plain_washer is a thin flat ring.

The data associated with a Plain_washer are the following:

— thickness;

— outside_diameter.

4.2.255.1 thickness

The thickness specifies the distance between two faces of the Plain_washer. It may be specified as a single value or as a range of values.

NOTE See annex L for a discussion of attributes that may be assigned a single value or a range of values.

4.2.255.2 outside_diameter

The outside_diameter specifies the external diameter of the Plain_washer. It may be specified as a single value or as a range of values.

NOTE See annex L for a discussion of attributes that may be assigned a single value or a range of values.

4.2.256. Planned_physical_plant

A Planned_physical_plant is the set of physical and spatial characteristics that a Plant (see **4.2.258**) can have, including siting, location, and orientation.

NOTE A Planned_physical_plant can also be the basis for locating other items such as Plant_item (see **4.2.260**) objects, Plant_item_location (see **4.2.272**).

4.2.257. Planned_physical_plant_item

A Planned_physical_plant_item is a type of Plant_item_instance (see **4.2.269**) that is intended to have physical existence in the real world and that has been used or instanced in a design.

NOTE Additionally, a Planned_physical_plant_item is always intended to be `physical' as opposed to purely volumetric. In general, this means that anything that would pose a hard physical impediment to a kick (e.g., a pump) is a physical item, and anything that does not (e.g., an escape route or the water in a cooling pond) is purely volumetric.

 © ISO 2001 — All rights reserved

The data associated with a Planned_physical_plant_item are the following:

— stock_code;

— global_unambiguous_identifier.

4.2.257.1 stock_code

The stock_code is an identifier of an in-stock item that may be necessary to be included in a piece of shop fabricated piping.

4.2.257.2 global_unambiguous_identifer

A global_unambiguous_identifier is a unique, persistent identifier of the item consisting of a concatenation of a company_id and a local_id generated by the company.

4.2.257.2.1 company_id

The company_id specifies a unique identifier for the company that created the data. The string is left justified and blank filled.

4.2.257.2.2 local_id

The local_id specifies a persistent identifier which uniquely identifies this item throughout the company. It is assigned at the time the item definition is created. The string is left justified and blank filled.

4.2.258. Plant

A Plant is a portion of an installation (or the entire installation) required to operate to produce products. Each Plant may be one of the following: a Manufacturing_line (see **4.2.216**), a Train (see **4.2.356**), or a Unit (see **4.2.365**). The z-axis of the local coordinate system of the Plant shall be considered the elevation of the coordinate space.

NOTE Manufacturing_lines (see **4.2.216**), Trains (see **4.2.356**), and Units (see **4.2.365**), may be considered as sub-plants of a Plant because they perform all of the same functions as a plant and may be considered as a plant. They are distinct, they produce products based on input resources, and they are (relatively) independent of other plant/sub-plants. Trains, for instance, provide duplicate functionality of one another in case of failure.

The data associated with a Plant are the following:

— definition_coordinate_system;

— description;

— length_between_perpendiculars;

— name;

— operator;

© ISO 2001 — All rights reserved

— owners;

— plant_id;

— plant_type.

4.2.258.1 definition_coordinate_system

The definition_coordinate_system is the origin and axes of the Plant that serve as the basis for the location and orientation of Plant_items (see **4.2.260**) and subplants in the Plant.

4.2.258.2 description

The description specifies a textual explanation or summary of the Plant. The description need not be specified for a particular Plant. There may be more than one description for a Plant.

4.2.258.3 length_between_perpendiculars

Length_between_perpendiculars specifies the distance between perpendicular elements in the model. This is used to specify layout grids in a model, and to specify the horizontal, longitudinal distance between the aft and forward perpendiculars in ship models.

EXAMPLE Column spacing in a Plant is an example of layout grids in a model.

4.2.258.4 name

The name specifies a textual label given to the Plant.

4.2.258.5 operator

The operator specifies the name of the organization(s) responsible for the operation of the Plant. For a given Plant, the operator need not be specified.

4.2.258.6 owners

The owners specifies the name of the organization(s) that owns the Plant. For a given Plant, the owners need not be specified.

4.2.258.7 plant_id

The plant_id specifies a unique identifier for the Plant. Plant_id is required for each Plant.

4.2.258.8 plant_type

Plant_type specifies a designation that classifies a Plant based on its physical and functional characteristics.

EXAMPLE Examples of plant_type include: beverage plant, pharmaceutical plant, power plant, offshore oil facility, commercial ship, and military ship.

 © ISO 2001 — All rights reserved

4.2.259. Plant_csg_shape_representation

A Plant_csg_shape_representation is a type of Shape_representation (see **4.2.309**). This requirement is for a "pure csg" shape, and a complex csg will be accomplished using the hybrid representation.

4.2.260. Plant_item

A Plant_item is an identifiable item that has a shape and that may be used as a component of the Plant (see **4.2.258**). The Plant_item need not be a physical item, but may be an allocation of space reserved for a purpose. Each Plant_item is either: a Plant_item_definition (see **4.2.267**) or a Plant_item_instance (see **4.2.269**). Each Plant_item may be one of the following: a Ducting_component (see **4.2.90**), an Electrical_component (see **4.2.99**), an Equipment (see **4.2.104**), an Hvac_component (see **4.2.145**), an Instrumentation_and_control_component (see **4.2.189**), an Insulation (see **4.2.191**), a Piping_system_component (see **4.2.250**), a Structural_-component (see **4.2.335**), or a Support_component (see **4.2.343**).

The data associated with a Plant_item are the following:

— description;

— name;

— plant_item_id;

— status;

— type.

4.2.260.1 description

The description specifies a textual explanation or summary of the Plant_item.

4.2.260.2 name

The name specifies a textual label given to the Plant_item.

4.2.260.3 plant_item_id

The plant_item_id specifies a unique identifier for the Plant_item. Plant_item_id is required for each Plant_item.

4.2.260.4 status

The status specifies the state of the Plant_item within the life cycle of the Plant (see **4.2.258**).

4.2.260.5 type

The type specifies a designation that classifies a Plant_item based on its physical and functional characteristics.

© ISO 2001 — All rights reserved

4.2.261. Plant_item_centreline

A Plant_item_centreline is a type of Reference_geometry (see **4.2.295**) that is a centre of symmetry of an aspect of the shape of the Plant_item (see **4.2.260**).

4.2.262. Plant_item_collection

A Plant_item_collection is an association that indicates that a component Plant_item (see **4.2.260**) is part of an aggregate Plant_item. Each Plant_item_collection may be a Connected_collection (see **4.2.70**). Each Plant_item_collection may be a Hierarchically_organized_collection (see **4.2.141**).

EXAMPLE A Plant_item_collection may be defined for a kit, where the members are not connected, or for an assembly, where the members are connected. Collections that are not hierarchically organized may be physical systems where a single component plays a role in multiple systems, such as a gauge.

The data associated with a Plant_item_collection are the following:

— location_and_orientation;

— usage_type.

4.2.262.1 location_and_orientation

The location_and_orientation specifies the relative position and orientation of the Plant_item (see **4.2.260**) within the Plant_item_collection. The location_and_orientation need not be specified for a particular Plant_item_collection.

4.2.262.2 usage_type

The usage_type specifies the purpose for the association defined by the Plant_item_collection. The usage_type may be one of the following:

— BOM;
— compound bend pipe;
— source identification;
— assembly-component.

4.2.262.2.1 BOM: The value BOM specifies that the Plant_item_collection is being used to collect Plant_items (see **4.2.260**) that represent a bill of materials for the Plant_item identified as the group.

4.2.262.2.2 compound bend pipe: The value compound bend pipe specifies that the Plant_item_collection is being used to collect Plant_items (see **4.2.260**) that are Pipes (see **4.2.236**) to create a Compound_bend_pipe (see **4.2.65**). If the usage_type is Compound_bend_-pipe, the group Plant_item shall be a Compound_bend_pipe, and the element Plant_items are either Straight_pipe (see **4.2.332**), Swept_bend_pipe (see **4.2.349**), or Mitre_bend_pipe (see **4.2.219**).

 © ISO 2001 — All rights reserved

4.2.262.2.3 source identification: The value source identification specifies that the Plant_item_collection is being used to collect different suppliers' source Plant_items (see **4.2.260**) identified by the element for a particular Plant_item identified by the group.

4.2.262.2.4 assembly-component: The value assembly-component specifies that the Plant_item_collection is being used to collect immediate component Plant_items (see **4.2.260**) in an assembly Plant_item. The group identifies the Plant_item that is the assembly and the element identifies the Plant_item that is the group

4.2.263. Plant_item_connection

A Plant_item_connection is a linkage between two or more Plant_item_connector (see **4.2.265**) objects. The joining conditions may be specified for the connection. Each Plant_item_connection is either a Connection_definition (see **4.2.72**) or a Plant_item_connection_occurrence (see **4.2.264**). Each Plant_item_connection is either a Flexible_connection (see **4.2.123**) or a Locked_orientation_connection (see **4.2.213**). Each Plant_item_connection may be an Electricity_transference (see **4.2.102**). Each Plant_item_connection may be a Fluid_transference (see **4.2.124**). Each Plant_item_connection may be a Load_transference (see **4.2.209**). Each Plant_item_connection can have many function types, for the purpose of describing the role that the connection plays in the Plant (see **4.2.258**).

NOTE 1 In most cases, such as Piping_components (see **4.2.240**), a Plant_item_connection links only two Plant_item_connector (see **4.2.265**) objects.

NOTE 2 The term connection does not imply functional continuity beyond the connectors involved in the connection.

The data associated with a Plant_item_connection are the following:

— connection_commitment_target;

— connection_id;

— description;

— shop_joint.

4.2.263.1 connection_commitment_target

The connection_commitment_target specifies when in the life_cycle phases of the Plant_system (see **4.2.276**) that a connection is actually made.

EXAMPLE Examples of connection_commitment_targets include fabrication, field-fit, commissioning, or others.

4.2.263.2 connection_id

The connection_id specifies a unique identifier for the Plant_item_connection. Connection_id is required for each Plant_item_connection.

4.2.263.3 description

© ISO 2001 — All rights reserved

The description specifies the textual explanation or summary of the function of the Plant_item_connection.

4.2.263.4 shop_joint

The shop_joint specifies that the connection is made in the shop.

4.2.264. Plant_item_connection_occurrence

A Plant_item_connection_occurrence is a type of Plant_item_connection (see **4.2.263**) that involves a physical linkage between two or more Plant_item_connector_occurrence (see **4.2.266**) objects.

The data associated with a Plant_item_connection_occurrence are the following:

— connection_definition;

— field_fit.

4.2.264.1 connection_definition

The connection_definition specifies the connection_id of the Connection_definition (see **4.2.72**) which specifies the defined characteristics of the Plant_item_connection_occurrence.

4.2.264.2 field_fit

The field_fit specifies that the Plant_item_connection_occurrence is to be made by adjusting the length of Pipe (see **4.2.236**) to make the connection properly.

4.2.265. Plant_item_connector

A Plant_item_connector is a feature of a Plant_item (see **4.2.260**) that is designed to connect to a connector on another Plant_item. Each Plant_item_connector may have specified its design type as one of the following: an Electrical_connector (see **4.2.100**), a Piping_connector (see **4.2.242**), or a Structural_load_connector (see **4.2.336**). Each Plant_item_connector is either a Connector_-definition (see **4.2.75**) (a definitional type) or a Plant_item_connector_occurrence (see **4.2.266**) (a specified type).

NOTE The definitional type is used as the connector definition for a Plant_item_definition (see **4.2.267**). A specified type is used for a Plant_item_instance (see **4.2.269**).

The data associated with a Plant_item_connector are the following:

— connect_point;

— plant_item_connector_id.

4.2.265.1 connect_point

 © ISO 2001 — All rights reserved

The connect_point specifies a point on or in the connector where the terminal interface with another connector occurs.

4.2.265.2 plant_item_connector_id

The plant_item_connector_id specifies a unique identifier for the Plant_item_connector. Plant_item_connector_id is required for each Plant_item_connector.

4.2.266. Plant_item_connector_occurrence

A Plant_item_connector_occurrence is a type of Plant_item_connector (see **4.2.265**) that is a physical feature of a Plant_item (see **4.2.260**) that connects or mates with a like type of connector on another Plant_item. Each Plant_item_connector_occurrence is either: a Functional_connector (see **4.2.128**) or a Physical_connector (see **4.2.234**).

The data associated with a Plant_item_connector_occurrence are the following:

— connector_definition;

— orientation.

4.2.266.1 connector_definition

The connector_definition specifies the connector_id of the Connector_definition (see **4.2.75**) which specifies the defined characteristics of the Plant_item_connector_occurrence.

4.2.266.2 orientation

The orientation specifies the relative orientation of the Plant_item_connector_occurrence to a defined point on the Plant_item (see **4.2.260**).

4.2.267. Plant_item_definition

A Plant_item_definition is a type of Plant_item (see **4.2.260**) that has been designed to some level of completeness, but has not been used as the design for physical Plant_item objects.

4.2.268. Plant_item_design_view

A Plant_item_design_view is the collection of information about a Plant_item (see **4.2.260**) that is associated with a particular design phase. Each Plant_item_design_view is either: a Functional_design_view (see **4.2.131**) or a Physical_design_view (see **4.2.235**).

4.2.269. Plant_item_instance

A Plant_item_instance is a planned type of Plant_item (see **4.2.260**), as instanced in a spatial, functional or other design. Each Plant_item_instance is either a Planned_physical_plant_item (see **4.2.257**) or a Plant_volume (see **4.2.278**).

NOTE A Plant_item_instance is created through the use or instancing of a Plant_item_definition (see **4.2.267**) by placing it in a design.

© ISO 2001 — All rights reserved

4.2.270. Plant_item_interference

A Plant_item_interference is where the spatial volume occupied by a Plant_item (see **4.2.260**) overlaps the space occupied by one or more Plant_item objects.

The data associated with a Plant_item_interference are the following:

— interference_id;

— type.

4.2.270.1 interference_id

The interference_id specifies an identifier for the Plant_item_interference.

4.2.270.2 type

The type specifies the classification assigned to the Plant_item_interference based on the criticality of the clash.

NOTE The criticality is an assessment of the importance or significance of the clash for a particular project. The values are project dependent.

4.2.271. Plant_item_interference_status

A Plant_item_interference_status is a designation indicating the state of resolution of an identified interference.

The data associated with a Plant_item_interference_status are the following:

— assessor;

— first_item;

— second_item;

— status.

4.2.271.1 assessor

The assessor specifies the individual or organization assigned the responsibility for resolving the Plant_item_interference (see **4.2.270**).

4.2.271.2 first_item

The first_item specifies the plant_item_id of one of the Plant_items (see **4.2.260**) that is interfering.

4.2.271.3 second_item

 © ISO 2001 — All rights reserved

The second_item specifies the plant_item_id of one of the Plant_items (see **4.2.260**) that is interfering.

4.2.271.4 status

The status specifies a designation indicating the state of resolution of an identified Plant_item_interference (see **4.2.270**).

4.2.272. Plant_item_location

A Plant_item_location is the position of the Plant_item (see **4.2.260**) within a Plant (see **4.2.258**). The position of a Plant_item is specified as the transformation (translation and rotation) of a point and axes on the Plant_item to a point and axes in the destination coordinate system. Each Plant_item_location is either a Location_in_building (see **4.2.210**), a Location_in_plant (see **4.2.211**), a Location_in_site (see **4.2.212**), or a Relative_item_location (see **4.2.298**).

The data associated with a Plant_item_location are the following:

— location_and_orientation;

— location_id.

4.2.272.1 location_and_orientation

The location_and_orientation specifies the relative position and orientation of the Plant_item (see **4.2.260**) within the Plant (see **4.2.258**).

4.2.272.2 location_id
The location_id specifies a unique identifier for the Plant_item_location.

4.2.273. Plant_item_shape

A Plant_item_shape is the volumetric representation of a Plant_item (see **4.2.260**). Each Plant_item_shape may be one of the following: a Detail_shape (see **4.2.88**), an Envelope_shape (see **4.2.103**), or an Outline_shape (see **4.2.228**). The z-axis of the local coordinate system of the Plant_item_shape shall be considered the elevation of the coordinate space.

The data associated with a Plant_item_shape are the following:

— clash_detection_class;

— origin.

4.2.273.1 clash_detection_class

The clash_detection_class specifies a designation that classifies a Plant_item_shape for the purposes of interference checking. The value of the clash_detection_class attribute shall be one of the following:

— hard;

— ignore;
© ISO 2001 — All rights reserved

— soft.

4.2.273.1.1 hard: the Plant_item_shape is used for clash detection and indicates that the shape cannot occupy the same physical space with another hard shape.

4.2.273.1.2 ignore: the Plant_item_shape is not used for clash detection.

4.2.273.1.3 soft: the Plant_item_shape is used for clash detection and indicates that the shape can occupy the same space with another soft shape and, depending on the circumstances, may occupy the same space as a hard object.

NOTE See Table 1. Table 1 represents a comparison between the clash_detection_class designations for two Plant_item_shapes and indicates whether the resulting interference would be designated as hard clash, soft clash, or no clash. A hard clash refers to an interference between two Plant_item_shapes whose clash_detection_class is hard. A soft clash refers to an interference between two Plant_item_shapes where at least one of the Plant_item_shapes has a clash_detection_class of soft. A no clash refers to an interference between two Plant_item_shapes where at least one of the Plant_item_shapes has a clash_-detection_class of ignore.

Table 1 — Plant_item_shape interference clash detection

	Hard	Ignore	Soft
Hard	hard clash	no clash	soft clash
Ignore	no clash	no clash	no clash
Soft	soft clash	no clash	soft clash

4.2.273.2 origin

The origin specifies the locating point for the geometric shape of a Plant_item (see **4.2.260**).

4.2.274. Plant_item_weight

A Plant_item_weight is an estimate or the measure of the force experienced by the Plant_item (see **4.2.260**) as a result of the earth's gravity.

NOTE Before the Plant_item (see **4.2.260**) actually exists, weight is simply an estimate. The actual weight may be provided if the Plant_item does exist and has been measured.

The data associated with a Plant_item_weight are the following:

— centre_of_gravity;

— weight_state;

— weight_value.

 © ISO 2001 — All rights reserved

4.2.274.1 centre_of_gravity

The centre_of_gravity specifies the point where the entire weight of a Plant_item (see **4.2.260**) may be considered as concentrated so that if supported at this point the Plant_item would remain in equilibrium in any position.

4.2.274.2 weight_state

The weight_state specifies a designation of the condition of the Plant_item (see **4.2.260**) that corresponds to the Plant_item_weight.

NOTE The value of the weight_state may be one of a set of predefined values or may be user supplied.

The value of the weight_state attribute may be one of the following:

— empty;

— full;

— operating;

— shipping;

— test;

— weight value.

4.2.274.2.1 empty: the Plant_item (see **4.2.260**) does not contain any process materials.

4.2.274.2.2 full: the Plant_item (see **4.2.260**) contains maximum amount of process materials.

4.2.274.2.3 operating: the Plant_item (see **4.2.260**) is in normal operating conditions.

4.2.274.2.4 shipping: the Plant_item (see **4.2.260**) and its transportation and packing materials are included.

4.2.274.2.5 test: the Plant_item (see **4.2.260**) is for purposes of structural load calculations.

4.2.274.3 weight_value

The weight_value specifies a measure of the force experienced by the Plant_item (see **4.2.260**) as a result of the earth's gravity.

4.2.275. Plant_process_capability

A Plant_process_capability is a functional behaviour that can be executed by the Plant (see **4.2.258**).

The data associated with a Plant_process_capability are the following:

— production_capacity;

— production_type.

© ISO 2001 — All rights reserved

EXAMPLE A Plant (see **4.2.258**) with a production_type of POWER may produce power at a production_capacity of 500 million kilowatts per hour. If this process capability is provided by a combination of a Piping_system (see **4.2.249**) (for steam, for example) and an Electrical_system (see **4.2.101**), both of these systems can be combined as a subplant; the subplant has the process capability and is part of a plant.

4.2.275.1 production_capacity

The production_capacity specifies the rated output of the Plant (see **4.2.258**) with respect to a Plant_process_capability.

4.2.275.2 production_type

The production_type specifies a designation that classifies the Plant (see **4.2.258**) based on the products it produces.

4.2.276. Plant_system

A Plant_system is a combination of Plant_item (see **4.2.260**) objects that perform a function required for the Plant (see **4.2.258**) to operate to produce products. Each Plant_system may be one of the following: an Electrical_system (see **4.2.101**), a Ducting_system (see **4.2.91**), an Instrumentation_and_control_system (see **4.2.190**), a Piping_system (see **4.2.249**), or a Structural_system (see **4.2.337**).

The data associated with a Plant_system are the following:

— name;

— plant_system_id;

— service_description;

— approval_state.

4.2.276.1 name

The name specifies a textual label given to the Plant_system.

4.2.276.2 plant_system_id

The plant_system_id specifies a unique identifier for the Plant_system. Plant_system_id is required for each Plant_system.

4.2.276.3 service_description

The service_description specifies a textual or summary label for the system.

EXAMPLE Examples of service_description labels include Boiler Feedwater System, Paraxylene System, Pipe Rack K, and 4160V Power System.

4.2.276.4 approval_state

 © ISO 2001 — All rights reserved

The approval_state indicates the current status of the system.

4.2.277. Plant_system_assembly

A Plant_system_assembly is a collection of Plant_system (see **4.2.276**) objects into a higher-level system to perform a functional capability.

The data associated with a Plant_system_assembly are the following:

— subsystem;

— supersystem.

4.2.277.1 subsystem

The subsystem specifies the plant_id and plant_system_id of the Plant_system (see **4.2.276**) that is the component system in the Plant_system_assembly.

4.2.277.2 supersystem

The supersystem specifies the plant_id and plant_system_id of the Plant_system (see **4.2.276**) that is the assembly system in the Plant_system_assembly.

4.2.278. Plant_volume

A Plant_volume is a type of Plant_item_instance (see **4.2.269**) that is a specifically defined volume located within a Plant (see **4.2.258**) that may, but need not be occupied by physical Plant_item (see **4.2.260**) objects. Each Plant_volume may be one of the following: a Reserved_-space (see **4.2.300**), a Route (see **4.2.302**), or a System_space (see **4.2.350**).

The data associated with a Plant_volume are the following:

— type.

The type specifies a designation that classifies the Plant_volume.

EXAMPLE Examples of Plant_volume object type classifications include reserved space, zone-area, area classification zone, equipment pull space, and egress for personnel.

4.2.279. Plate

A Plate is a type of Pipe_closure (see **4.2.237**) that consists of a flat piece that is welded on the end of the Pipe (see **4.2.236**).

NOTE Figure 50 depicts a typical Plate.

© ISO 2001 — All rights reserved

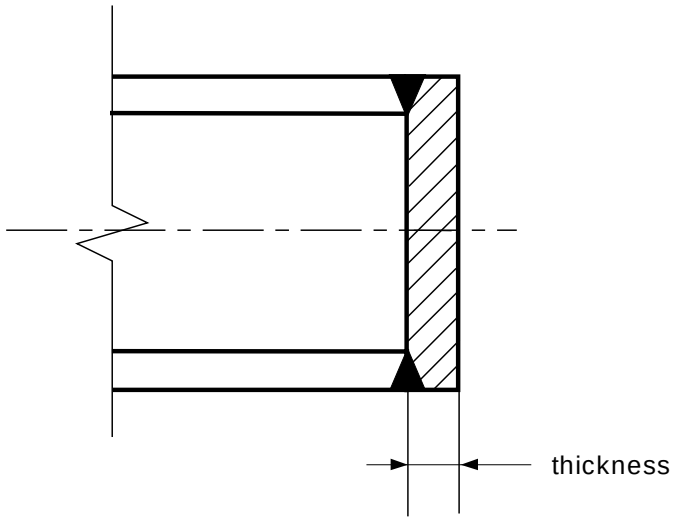

Figure 50 - Plate

The data associated with a Plate are the following:

— thickness.

The thickness is the distance between the parallel faces of the Plate.

4.2.280. Plug

A Plug is a type of Pipe_closure (see **4.2.237**) that closes off the end of a Pipe (see **4.2.236**) by fitting within the inside wall of the Pipe.

NOTE Figure 51 depicts a typical Plug.

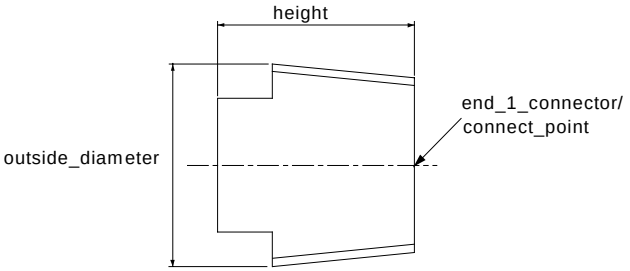

Figure 51 - Plug

The data associated with a Plug are the following:

— height.

The height specifies the axial length of Plug.

 © ISO 2001 — All rights reserved

4.2.281. Point

A Point is a type of Wire_and_surface_element (see **4.2.372**) that is a dimensionless location in space.

4.2.282. Point_and_line_representation

A Point_and_line_representation is a type of Site_shape_representation (see **4.2.315**) represented as a collection of Point (see **4.2.281**) objects that define the surface grid of the topography of a Site (see **4.2.313**).

4.2.283. Polygon

A Polygon is a type of Curve (see **4.2.85**) that is composed of a set of points connected by line segments that form a planar, closed, non-self-intersecting figure.

4.2.284. Pressure_class

A Pressure_class is a type of Piping_size_description (see **4.2.244**) based on pressure rating or classification and a nominal size value.

NOTE This type of Piping_size_description (see **4.2.244**) is commonly associated with a dimensional specification, such as the ANSI B16.5 specification for Flange objects.

The data associated with a Pressure_class are the following:

— nominal_size;

— pressure_rating.

4.2.284.1 nominal_size

The nominal_size specifies a standard size designation of the Piping_system_component (see **4.2.250**) or Piping_connector (see **4.2.242**). It may be specified as a single value or as a range of values.

NOTE 1 The nominal size need not represent an actual dimension.

NOTE 2 See annex L for a discussion of attributes that may be assigned a single value or a range of values.

4.2.284.2 pressure_rating

The pressure_rating specifies a nominal pressure for the design of the Piping_system_component (see **4.2.250**) or Piping_connector (see **4.2.242**). It may be specified as a single value or as a range of values.

NOTE 1 When specified with a dimensional standard, such as ANSI B16.1, its value corresponds to a selection out of a set of available values (e.g., 150 PSI, 300 PSI).

NOTE 2 See annex L for a discussion of attributes that may be assigned a single value or a range of values.

4.2.285. Pressure_fit

© ISO 2001 — All rights reserved

A Pressure_fit is a type of Piping_connector (see **4.2.242**) that is a physical feature of a Plant_-item (see **4.2.260**) that intended to establish a connection with another connector through pressure between the connector rather than by means of threading, welds, or fasteners.

4.2.286. Process_ducting

A Process_ducting is a type of Ducting_component (see **4.2.90**) and Piping_system_component (see **4.2.250**) that consists of Piping_component (see **4.2.240**) objects or ductwork that is used to convey process streams in a Plant (see **4.2.258**).

NOTE Process_ducting is used for venting gaseous portions of the process stream. It is part of the system that handles the process stream, but is ductwork rather than piping.

The data associated with a Process_ducting are the following:

— gauge.

The gauge specifies a designation that refers to the thickness of the Process_ducting.

4.2.287. Project_design_assignment

A Project_design_assignment is an assignment of a Plant_item (see **4.2.260**) to a Design_project (see **4.2.87**).

NOTE The set of Project_design_assignment instances for a project defines the items and areas that are part of the project.

4.2.288. Pyramid

A Pyramid is a type of Csg_element (see **4.2.84**) that is a 3D volume with a rectangular base and four triangular sides that meet at an apex. The axis of a Pyramid is the line segment from the centre of the base to the apex.

4.2.289. Raceway

A Raceway is a type of Cableway_piece (see **4.2.22**) that has a rectangular cross section and contains one or more channels for holding cables.

EXAMPLE Surface raceway, ladder-type raceway.

4.2.290. Raceway_lane

A Raceway_lane is a type of Cableway_component (see **4.2.19**) that is a channel within a Raceway (see **4.2.289**) for holding cables.

4.2.291. Raceway_size_description

 © ISO 2001 — All rights reserved

A Raceway_size_description is a type of Cableway_size_description (see **4.2.23**) that is used to explain or summarize the physical size of a Raceway (see **4.2.289**) based on a set of dimensional characteristics.

The data associated with a Raceway_size_description are the following:

— outer_width;

— outer_height;

— inner_width;

— inner_height.

4.2.291.1 outer_width

The outer_width is the horizontal measurement of the outer surface of a Raceway (see **4.2.289**). It may be specified as a single value or as a range of values.

NOTE See annex L for a discussion of attributes that may be assigned a single value or a range of values.

4.2.291.2 outer_height

The outer_height is the vertical measurement of the outer surface of a Raceway (see **4.2.289**). It may be specified as a single value or as a range of values.

NOTE See annex L for a discussion of attributes that may be assigned a single value or a range of values.

4.2.291.3 inner_width

The inner_width is the horizontal measurement of the inner surface of a Raceway (see **4.2.289**). It may be specified as a single value or as a range of values.

NOTE See annex L for a discussion of attributes that may be assigned a single value or a range of values.

4.2.291.4 inner_height

The inner_height is the vertical measurement of the inner surface of a Raceway (see **4.2.289**). It may be specified as a single value or as a range of values.

NOTE See annex L for a discussion of attributes that may be assigned a single value or a range of values.

4.2.292. Reducer

A Reducer is a type of Fitting (see **4.2.118**) that provides a reduction from one Pipe (see **4.2.236**) size to another. Each Reducer may be an Eccentric_reducer (see **4.2.97**).

NOTE Figure 52 depicts a typical butt-weld Reducer.

© ISO 2001 — All rights reserved

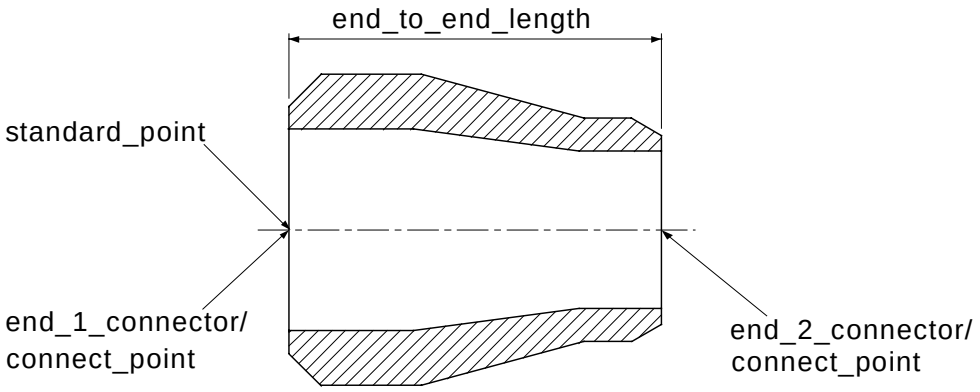

Figure 52 - Reducer

The data associated with a Reducer are the following:

— end_1_connector;

— end_2_connector;

— end_to_end_length.

4.2.292.1 end_1_connector

The end_1_connector specifies the Piping_connector (see **4.2.242**) that connects to the larger size Pipe (see **4.2.236**).

4.2.292.2 end_2_connector

The end_2_connector specifies the Piping_connector (see **4.2.242**) that connects to the smaller size Pipe (see **4.2.236**).

4.2.292.3 end_to_end_length

The end_to_end_length specifies the external distance between the end-one face and the end-two face of the Reducer. It may be specified as a single value or as a range of values.

NOTE 1 See annex L for a discussion of attributes that may be assigned a single value or a range of values.

NOTE 2 Swage is a synonym for Reducer which is normally used for smaller sizes.

4.2.293. Reducing_flange

A Reducing_flange is a type of Flange (see **4.2.119**) used to make a Flanged (see **4.2.120**) joint between Pipe (see **4.2.236**) objects of different nominal sizes that has the dimensional characteristics of the larger Pipe and the bore of the smaller Pipe.

 © ISO 2001 — All rights reserved

EXAMPLE Examples of Reducing_flange types include Weld_neck_flange (see **4.2.370**), Slip_on_flange (see **4.2.317**), Socket_weld_flange (see **4.2.320**), and Threaded_flange (see **4.2.353**).

NOTE Figure 53 depicts a typical Reducing_flange.

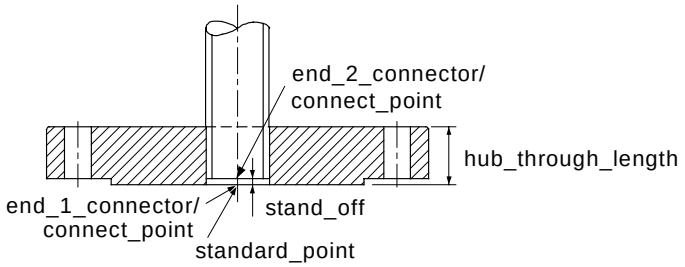

Figure 53 - Reducing_flange

The data associated with a Reducing_flange are the following:

— stand_off.

The stand_off specifies the measure of the distance between the face of the Reducing_flange and the end of the Pipe (see **4.2.236**) that is inserted into the Reducing_flange. It may be specified as a single value or as a range of values.

NOTE See annex L for a discussion of attributes that may be assigned a single value or a range of values.

4.2.294. Reducing_torus

A Reducing_torus is a type of Csg_element (see **4.2.84**) that is formed by sweeping a circle that uniformly decreases in size through a circular sweep angle of less that 360 degrees.

4.2.295. Reference_geometry

A Reference_geometry is the identification of one or more Shape_representation_element (see **4.2.310**) objects in a model that are not part of a component shape, but provide additional geometric information relative to the shape of the Plant_item (see **4.2.260**). Each Reference_-geometry may be a Plant_item_centreline (see **4.2.261**).

The data associated with a Reference_geometry are the following:

— name.

The name specifies a textual label given to the Reference_geometry.

4.2.296. Reinforcing_component

© ISO 2001 — All rights reserved

A Reinforcing_component is a type of Piping_component (see **4.2.240**) which is used to strengthen the Piping_spool (see **4.2.246**).

The data associated with a Reinforcing_component are the following:

— end_1_connector;

— location_point;

— orientation.

4.2.296.1 end_1_connector

The end_1_connector specifies the Piping_connector (see **4.2.242**) on the Reinforcing_component to the pipe.

4.2.296.2 location_point

The location_point is a standard point on Piping_component (see **4.2.240**) at which the Reinforcing_component is attached.

4.2.296.3 orientation

The orientation specifies a unit vector in the direction perpendicular to the centreline of the run pipe. The vector defines the layout of the Reinforcing_component.

4.2.296.4 reinforcing component types

Necessary information for piping shop fabrication: type, location point, orientation and dimensional parameters. Types of Reinforcing_components include: Gusset (see **4.2.138**), Reinforcing_plate (see **4.2.297**), and Stay (see **4.2.330**).

4.2.297. Reinforcing_plate

A Reinforcing_plate is a type of Reinforcing_component (see **4.2.296**) that is made of plate that has a hole at its centre. It is firmly attached to run pipe and branch pipe to prevent the welded part between the branch pipe and the run pipe from breaking.

NOTE Figure 54 depicts a typical Reinforcing_plate.

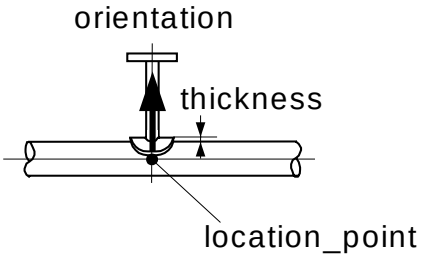

Figure 54 - Reinforcing_plate

 © ISO 2001 — All rights reserved

The data associated with a Reinforcing_plate are the following:

— thickness.

The thickness is the distance of the top face of the Reinforcing_plate from the surface of the run pipe.

4.2.298. Relative_item_location

A Relative_item_location is a type of Plant_item_location (see **4.2.272**) that is the relative position of the Plant_item (see **4.2.260**) with respect to another Plant_item.

4.2.299. Required_material_description

A Required_material_description is a specification of the substances or the requirements of the substances that a component is to be made from.

The data associated with a Required_material_description are the following:

— description;

— material_requirement_id.

4.2.299.1 description

The description specifies a textual explanation or summary of the required materials.

4.2.299.2 material_requirement_id

The material_requirement_id specifies a unique identifier for the specification that provides the required material. Material_requirement_id is required for each Required_material_description.

NOTE The identifier is normally a coded value that is company-specific.

4.2.300. Reserved_space

A Reserved_space is a type of Plant_volume (see **4.2.278**) that is a region of space that is not to be obstructed by physical objects for reasons related to plant operation.

NOTE Reserved_spaces are normally prescriptive.

EXAMPLE Reserved_spaces include maintenance volume, operator access, and safety zone.

4.2.301. Ring_spacer

A Ring_spacer is a type of Spacer (see **4.2.322**) that fits between Flange (see **4.2.119**) objects in a Flanged (see **4.2.120**) joint to bridge a large gap or fill a slight angle between the Flange objects that cannot be accommodated by standard Flange gaskets.

NOTE Figure 55 depicts a typical Ring_spacer.

© ISO 2001 — All rights reserved

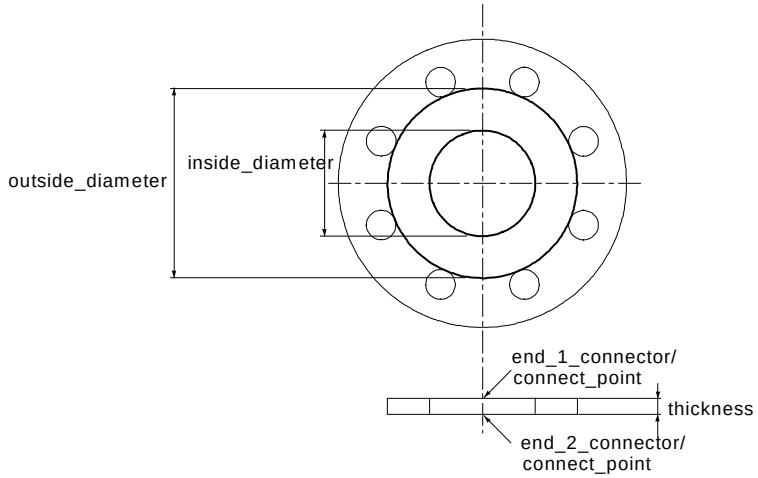

Figure 55 - Ring_spacer

The data associated with a Ring_spacer are the following:

— inside_diameter.

The inside_diameter specifies the diameter of the bore hole through the Ring_spacer. It may be specified as a single value or as a range of values.

NOTE See annex L for a discussion of attributes that may be assigned a single value or a range of values.

4.2.302. Route

A Route is a type of Plant_volume (see **4.2.278**) that is a 3D path from one location to another.

NOTE 1 A Route is a conceptual engineered path that reserves space for a Piping_system (see **4.2.249**). This space need not be occupied by a Plant_item (see **4.2.260**) at a future time.

NOTE 2 The shape of the reserved volume of a Route is a specified Plant_item_shape (see **4.2.273**).

EXAMPLE A cable trench is a kind of Route that goes through and runs underneath the surface of a Site (see **4.2.313**).

4.2.303. Schedule

A Schedule is a type of Piping_size_description (see **4.2.244**) that gives the Pipe (see **4.2.236**) or Piping_component (see **4.2.240**) size in terms of nominal size and a sizing schedule.

NOTE When a Schedule entity is used, the dimensional standard attribute of Piping_size_description (see **4.2.244**) must be specified.

The data associated with a Schedule are the following:

— nominal_size;

— pipe_schedule.

4.2.303.1 nominal_size

 © ISO 2001 — All rights reserved

The nominal_size specifies a standard size designation of the Piping_system_component (see **4.2.250**) or Piping_connector (see **4.2.242**). It may be specified as a single value or as a range of values.

NOTE 1 The nominal size need not represent an actual dimension.

NOTE 2 See annex L for a discussion of attributes that may be assigned a single value or a range of values.

4.2.303.2 pipe_schedule

The pipe_schedule specifies a designation of a standard wall thickness and external diameter for a nominal pipe size through a reference to the dimensional standard.

4.2.304. Segment_insulation

A Segment_insulation is a logical connection between a Piping_system_line_segment (see **4.2.252**) and the Insulation (see **4.2.191**) attached to the Pipe (see **4.2.236**) associated with the Piping_system_line_segment.

The data associated with a Segment_insulation are the following:

— boundaries;

— description;

— line_number;

— thickness;

— type.

4.2.304.1 boundaries

The boundaries specifies a description that defines the boundaries for Insulation (see **4.2.191**) on the Piping_system_line (see **4.2.251**).

EXAMPLE An example description for the Insulation (see **4.2.191**) boundaries of a Piping_system_line (see **4.2.251**) is personnel protection insulation shall extend to 12 feet above grade or walkway.

4.2.304.2 description

The description specifies a textual explanation or summary of the reasons for providing Insulation (see **4.2.191**).

EXAMPLE Examples of Piping_system_line (see **4.2.251**) Insulation (see **4.2.191**) descriptions include provided for heat conservation and provided for personnel protection.

4.2.304.3 line_number

The line_number specifies an alphanumeric identifier assigned to the Piping_system_line (see **4.2.251**) and can be used to uniquely define the Piping_system_line. Line_number is required for each Piping_system_line.

© ISO 2001 — All rights reserved

4.2.304.4 thickness

The thickness specifies the distance between the inside and outside surfaces of the Insulation (see **4.2.191**). It may be specified as a single value or as a range of values.

NOTE See annex L for a discussion of attributes that may be assigned a single value or a range of values. The thickness of the insulation may vary over the extent of the insulation.

4.2.304.5 type

The type specifies the Insulation (see **4.2.191**) material.

4.2.305. Service_operating_case

A Service_operating_case is a stream condition that may exist at a Plant_item_connector (see **4.2.265**).

EXAMPLE Examples of Service_operating_case conditions include normal, upset, and shutdown.

The data associated with a Service_operating_case are the following:

— duration;

— frequency;

— name;

— operating_pressure;

— operating_temperature.

4.2.305.1 duration

The duration specifies the expected time span of the Service_operating_case. It may be specified as a single value or as a range of values.

NOTE See annex L for a discussion of attributes that may be assigned a single value or a range of values.

4.2.305.2 frequency

The frequency specifies the expected number of times that the Service_operating_case will occur over a defined period of time. It may be specified as a single value or as a range of values.

NOTE See annex L for a discussion of attributes that may be assigned a single value or a range of values.

4.2.305.3 name

The name specifies a textual label given to the condition that the Equipment (see **4.2.104**) operating characteristics are being defined under.

4.2.305.4 operating_pressure

 © ISO 2001 — All rights reserved

The operating_pressure specifies the force per unit area exerted by the process stream on the Plant_item (see **4.2.260**) under a specific Service_operating_case. It may be specified as a single value or as a range of values.

NOTE See annex L for a discussion of attributes that may be assigned a single value or a range of values.

4.2.305.5 operating_temperature

The operating_temperature specifies the temperature of the process stream on the Plant_item (see **4.2.260**) under a specific Service_operating_case. It may be specified as a single value or as a range of values.

NOTE See annex L for a discussion of attributes that may be assigned a single value or a range of values.

4.2.306. Shape_inspection_record

A Shape_inspection_record is a collection of information that captures the result of an evaluation of an observed value for a characteristic of the shape of a Piping_spool (see **4.2.246**) against an expected, designed or prescribed value for that characteristic, as well as information to evaluate the acceptability of the observed value.

The data associated with a Shape_inspection_record are the following:

— shape_inspection_property_name;

— shape_inspection_property_sequence_number;

— inspected_property_tolerance;

— inspected_property_measured_value.

4.2.306.1 shape_inspection_property_name

The shape_inspection_property_name specifies the characteristic for which information is being recorded. The shape_inspection_property_name may be one of the following:

— point to point length;
— point to point angle;
— planarity;
— attached element location;
— attached element orientation.

4.2.306.2 shape_inspection_property_sequence_number

The shape_inspection_property_sequence_number specifies an alphanumeric string that identifies the node point that defines the shape property that is being measured. There may be more than one shape_inspection_property_sequence_number for a Shape_inspection_record.

NOTE The method of identification is outside the scope of this part of ISO 10303.

4.2.306.3 inspected_property_tolerance

© ISO 2001 — All rights reserved

The inspected_property_tolerance specifies the acceptable deviation for the measured result of the inspection.

4.2.306.4 inspected_property_measured_value

The inspected_property_measured_value specifies the recorded result of the inspection.

4.2.307. Shape_interference_zone_usage

A Shape_interference_zone_usage is the representational elements that define the shape of a volume that encloses the region of space where the interference of clashing Plant_items (see **4.2.260**) occurs.

The data associated with a Shape_interference_zone_usage are the following

— first_item;

— second_item.

4.2.307.1 first_item

The first_item specifies the plant_item_id of one of the Plant_items (see **4.2.260**) that is interfering.

4.2.307.2 second_item

The second_item specifies the plant_item_id of one of the Plant_items (see **4.2.260**) that is interfering.

4.2.308. Shape_parameter

A Shape_parameter is a type of Shape_representation_element (see **4.2.310**) that is a name-value pair that specifies the dimensional value of some aspect of the Plant_item_shape (see **4.2.273**). The meaning of the name-value pair is not specified in this part of ISO 10303.

NOTE 1 A use of this structure is to provide a generic capability to reference classes of Plant_items (see **4.2.260**) by a dimensional characteristic, such as 5 centimeter pipe.

NOTE 2 It was not the intent of this object to use this structure to create a geometric representation of an item. The effective use of this structure requires an agreement between the exchanging parties as to the meanings of the names so that they can understand the information being exchanged.

The data associated with a Shape_parameter are the following:

— name;

— value.

4.2.308.1 name

 © ISO 2001 — All rights reserved

The name specifies a textual label given to a dimension or parameter of a Plant_item_shape (see **4.2.273**).

EXAMPLE An example of this is the name "diameter".

4.2.308.2 value

The value specifies a number that represents the measure of the dimension or parameter of the Plant_item_shape (see **4.2.273**).

EXAMPLE An example of this is the value "5.6".

4.2.309. Shape_representation

A Shape_representation is a combination of geometric elements that describe or define the general or specific surface boundaries of a Plant_item (see **4.2.260**). Shape_representation is either a Hybrid_shape_representation (see **4.2.181**)or Plant_csg_shape_representation (see **4.2.259**).

NOTE Shape representation need not be the exact or specific shape of the item.

4.2.310. Shape_representation_element

A Shape_representation_element is a geometric model that is used to represent the shape or some aspect of the shape of a Plant_item (see **4.2.260**). Each Shape_representation_element is either a B_rep_element (see **4.2.2**), a Csg_element (see **4.2.84**), a Shape_parameter (see **4.2.308**), or a Wire_and_surface_element (see **4.2.372**).

4.2.311. Shape_representation_element_usage

A Shape_representation_element_usage is an assignment of a Shape_representation_element (see **4.2.310**) to a Shape_representation (see **4.2.309**) of a Plant_item (see **4.2.260**).

NOTE Shape_representation_element_usage is the mechanism that aggregates the geometric elements that represent the shape of the Plant_item (see **4.2.260**). The rules are constraints for what constitutes a valid aggregation are delineated by conformance class.

The data associated with a Shape_representation_element_usage are the following:

— element_colour;

— layer.

4.2.311.1 element_colour

The element_colour specifies the colour that displays the element.

4.2.311.2 layer

© ISO 2001 — All rights reserved

The layer specifies the collection of displayable items for the purpose of controlling visibility and presentation style.

4.2.312. Shoe

A Shoe is a type of Piping_support (see **4.2.248**) that is composed of Plates (see **4.2.279**), and which has a cross-sectional shape that resembles a reversed “T” or reversed PI. The Shoe supports the weight rigidly at its base, and is used to regulate the movement or to fix the position of pipe.

NOTE Figure 56 depicts a typical Shoe.

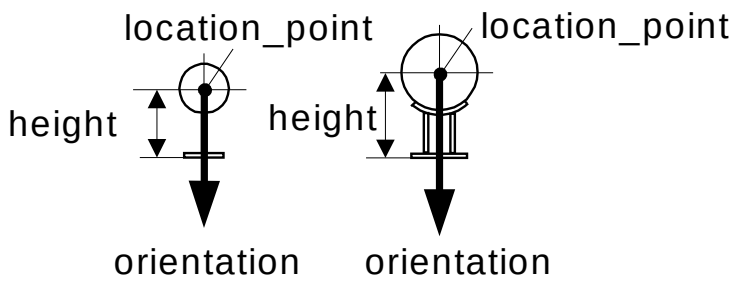

Figure 56 - Shoe

The data associated with a Shoe are the following:

— height.

The height is the distance between the supporting face of the base plate of the Shoe and location_point.

4.2.313. Site

A Site is a geographical location where the Plant (see **4.2.258**) is located. The z-axis of the local coordinate system of the Site shall be considered the elevation of the coordinate space.

The data associated with a Site are the following:

— address;

— coordinates;

— elevation;

— environmental_references;

— locality;

 © ISO 2001 — All rights reserved

— name;

— orientation;

— owners;

— site_id.

4.2.313.1 address

The address specifies the street address (including city, state, and zip code as appropriate) of the Site.

4.2.313.2 coordinates

The coordinates specifies the longitude and latitude coordinates of the Site with respect to a known Point (see **4.2.281**) on the Site.

4.2.313.3 elevation

The elevation specifies the distance that the Site is located above sea level with respect to a known Point (see **4.2.281**) on the Site.

NOTE The Point (see **4.2.281**) referenced here is the same point referenced under coordinates.

4.2.313.4 environmental_references

The environmental_references specifies a reference to a Document (see **4.2.89**) that provides environmental information relevant to the Site.

EXAMPLE Environmental_references specify Documents (see **4.2.89**) that describe the conditions of the environment that a Plant (see **4.2.258**) operates in that affect the design, such as snow loads, wind loads, and seismic data.

4.2.313.5 locality

The locality specifies the municipality or region where the Site is located.

4.2.313.6 name

The name specifies a textual label given to the Site.

4.2.313.7 orientation

The orientation specifies the relative alignment of the Site with respect to a given compass direction.

4.2.313.8 owners

The owners specify the company or organization that is financially responsible the Site.

4.2.313.9 site_id

The site_id specifies a unique identifier for the Site. Site_id is required for each Site.

© ISO 2001 — All rights reserved

4.2.314. Site_feature

A Site_feature is the composition, proportions, form, or outward appearance of some thing of interest on a Site (see **4.2.313**).

EXAMPLE A Site_feature may be man-made, such as a building, road, railway, water tower or they may be natural, such as a river, hill, or forest.

The data associated with a Site_feature are the following:

— location_and_orientation;

— man_made_or_natural;

— shape;

— site_feature_id;

— type.

4.2.314.1 location_and_orientation

The location_and_orientation specifies the position of the Site_feature relative to the Site (see **4.2.313**) coordinate system and the orientation of the Site_feature relative to a specified direction.

4.2.314.2 man_made_or_natural

The man_made_or_natural specifies that the Site_feature is either man-made or natural, and provides a short descriptive name or title of the feature.

4.2.314.3 shape

The shape specifies a 3D spatial volume that completely encloses or bounds a feature.

NOTE The shape of the Site_feature is necessary for the spatial layout of buildings and the piping between buildings.

4.2.314.4 site_feature_id

The site_feature_id specifies a unique identifier for the Site_feature.

4.2.314.5 type

The type specifies a designation that classifies a Site_feature based on its physical and functional characteristics.

4.2.315. Site_shape_representation

A Site_shape_representation is a replica of the topography of a specific area. Each Site_shape_representation is either a Faceted_surface_representation (see **4.2.114**) or a Point_and_line_representation (see **4.2.282**).

 © ISO 2001 — All rights reserved

4.2.316. Sited_plant

A Sited_plant is a Planned_physical_plant (see **4.2.256**) that a Site (see **4.2.313**) location has been defined for.

The data associated with a Sited_plant are the following:

— plant_site_location;

— plant_site_orientation.

4.2.316.1 plant_site_location

The plant_site_location specifies the geographic position of the Plant (see **4.2.258**) relative to the Site (see **4.2.313**) or a feature of the Site.

4.2.316.2 plant_site_orientation

The plant_site_orientation specifies the directional orientation of the Plant (see **4.2.258**) with respect to the Site (see **4.2.313**).

4.2.317. Slip_on_flange

A Slip_on_flange is a type of Flange (see **4.2.119**) that slips over the end of a Pipe (see **4.2.236**) or Fitting (see **4.2.118**) and is fillet welded in place.

NOTE Figure 57 depicts a typical Slip_on_flange.

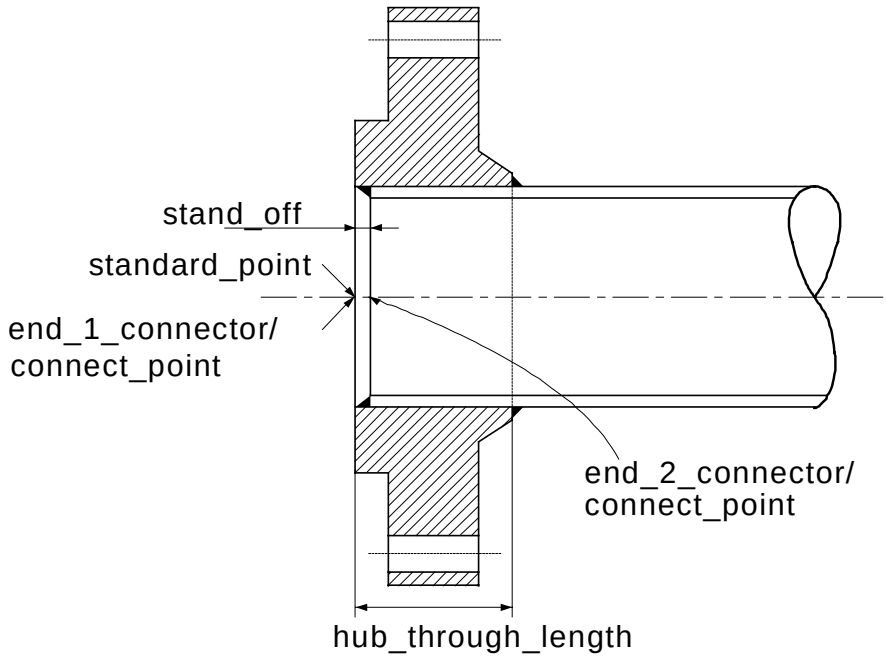

Figure 57 - Slip_on_flange

The data associated with a Slip_on_flange are the following:

© ISO 2001 — All rights reserved

— stand_off.

The stand_off specifies the measure of the distance between the face of the Slip_on_flange and the end of the Pipe (see **4.2.236**) or the Fitting (see **4.2.118**) that is inserted into the Slip_on_-flange. It may be specified as a single value or as a range of values.

NOTE See annex L for a discussion of attributes that may be assigned a single value or a range of values.

4.2.318. Slip_on_jacket_flange

A Slip_on_jacket_flange is a type of Slip_on_flange (see **4.2.317**) that slips over the end of a jacketed Piping_spool (see **4.2.246**), and closes off the jacket.

NOTE Figure 58 depicts a typical Slip_on_jacket_flange.

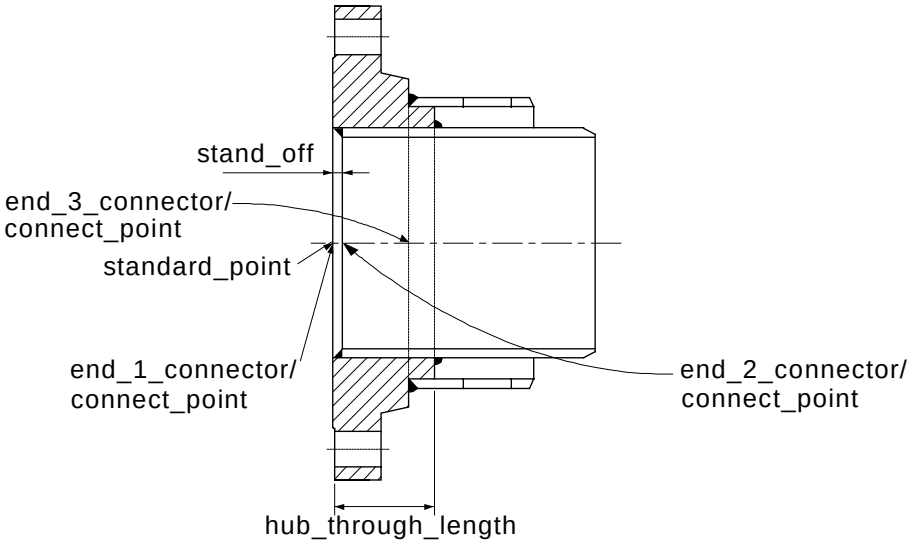

Figure 58 - Slip_on_jacket_flange

The data associated with a Slip_on_jacket_flange are the following:

— end_3_connector.

The end_3_connector specifies the Piping_ connector (see **4.2.242**) where the outside Pipe (see **4.2.236**) of the jacketed piping connects to the Flange (see **4.2.119**).

4.2.319. Socket

A Socket is a type of Piping_connector (see **4.2.242**) that is a physical feature of a Plant_item (see **4.2.260**) that allows partial insertion of the Male_end (see **4.2.215**) of another Plant_item.

NOTE 1 The location of the connect point should be based on the dimension from the centreline to the bottom of the Socket of a Valve (see **4.2.367**) or Fitting (see **4.2.118**) plus the set_back.

NOTE 2 Figure 59 depicts a typical Socket.

 © ISO 2001 — All rights reserved

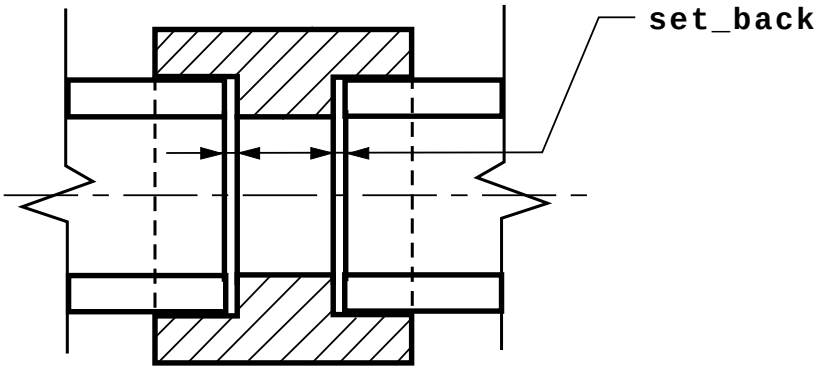

Figure 59 - Socket

The data associated with a Socket are the following:

— set_back.

The set_back specifies the distance between the end of the Piping_component (see **4.2.240**) and the bottom of the Socket.

NOTE The attribute for set_back will only be used when the Piping_component (see **4.2.240**) participates in a connection.

4.2.320. Socket_weld_flange

A Socket_weld_flange is a type of Flange (see **4.2.119**) having a Socket (see **4.2.319**) configuration that fits the end of a Pipe (see **4.2.236**) for fillet welding.

NOTE Figure 60 depicts a typical Socket_weld_flange.

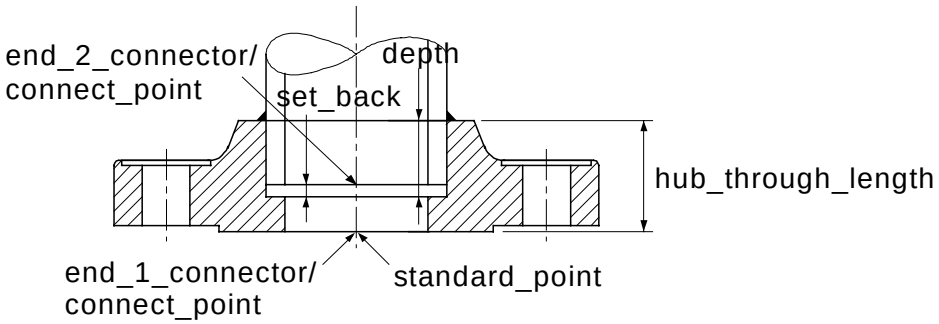

Figure 60 - Socket_weld_flange

© ISO 2001 — All rights reserved

4.2.321. Solid_of_revolution

A Solid_of_revolution is a type of Csg_element (see **4.2.84**) that is formed by sweeping a 2D shape about an axis. The 2D shape may be closed or open; if open, then the ends of the 2D shape must lie on the sweep axis.

4.2.322. Spacer

A Spacer is a type of Fitting (see **4.2.118**) that is placed between two Flange (see **4.2.119**) objects to enable the flow of material between the pipelines on either side of the Spacer. Each Spacer may be one of the following: a Paddle_spacer (see **4.2.231**), or a Ring_spacer (see **4.2.301**).

The data associated with a Spacer are the following:

— outside_diameter;

— thickness.

4.2.322.1 outside_diameter

The outside_diameter specifies the external diameter of the Spacer. It may be specified as a single value or as a range of values.

NOTE See annex L for a discussion of attributes that may be assigned a single value or a range of values.

4.2.322.2 thickness

The thickness specifies the distance between the two parallel faces of the Spacer. It may be specified as a single value or as a range of values.

NOTE See annex L for a discussion of attributes that may be assigned a single value or a range of values.

4.2.323. Spare_plant_item_usage

A Spare_plant_item_usage is an association between a primary Plant_item (see **4.2.260**) and a Plant_item used as a spare for the primary Plant_item.

4.2.324. Specialty_item

A Specialty_item is a type of Piping_system_component (see **4.2.250**) whose specific dimensional design or configuration is not met by some standard commodity item.

The data associated with a Specialty_item are the following:

— type.

The type specifies a category that the item is part of.

EXAMPLE Examples of Specialty_item types include Flange (see **4.2.119**) and Valve (see **4.2.367**).

 © ISO 2001 — All rights reserved

4.2.325. Spectacle_blind

A Spectacle_blind is a type of Blank (see **4.2.5**) that consists of two paddles connected by an arm. One paddle blocks the flow of material (see Paddle_blank in **4.2.230**) and the other is a ring that permits or alters the flow (see Paddle_spacer in **4.2.231**). A spectacle either allows or disallows flow in a pipe depending on which end of the spectacle is installed in line. It is often used to isolate a section of the Piping_system (see **4.2.249**) or Equipment (see **4.2.104**).

NOTE 1 The term spectacle refers to shape of the item, that resembles a pair of spectacles (i.e., reading glasses).

NOTE 2 Figure 61 depicts a typical Spectacle_blind.

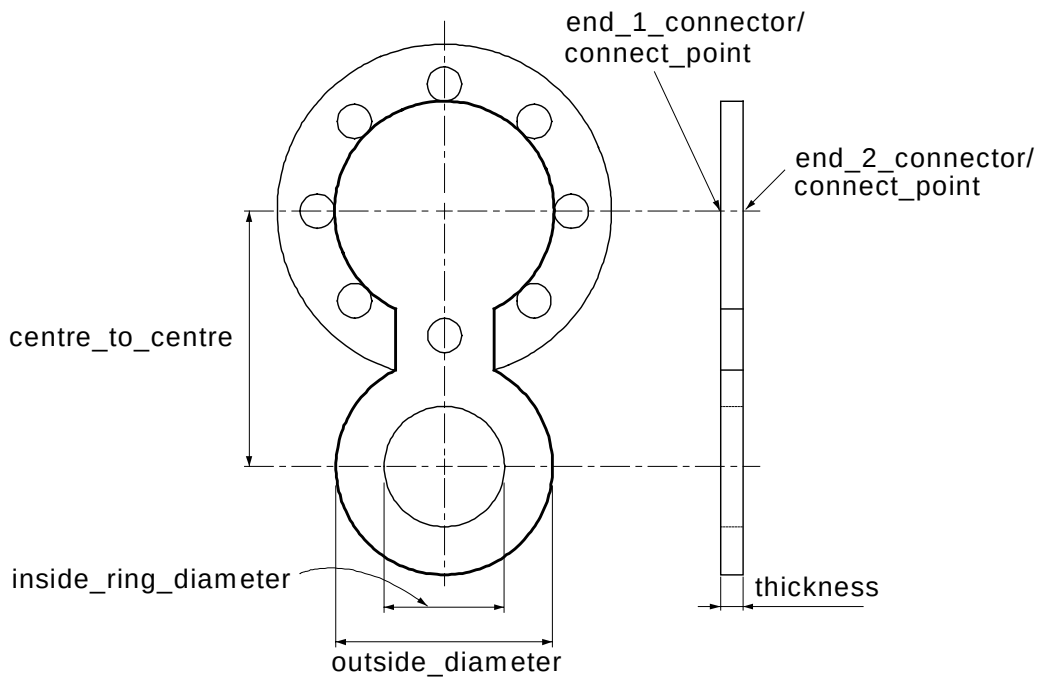

Figure 61 - Spectacle_blind

The data associated with a Spectacle_blind are the following:

— arm_width;

— centre_to_centre;

— inside_ring_diameter.

4.2.325.1 arm_width

The arm_width specifies the width of the arm connecting the paddles. It may be specified as a single value or as a range of values.

NOTE See annex L for a discussion of attributes that may be assigned a single value or a range of values.

4.2.325.2 centre_to_centre

© ISO 2001 — All rights reserved

The centre_to_centre specifies the distance between the geometric centres of the paddles. It may be specified as a single value or as a range of values.

NOTE See annex L for a discussion of attributes that may be assigned a single value or a range of values.

4.2.325.3 inside_ring_diameter

The inside_ring_diameter specifies the diameter of the bore hole through the ring paddle. It may be specified as a single value or as a range of values.

NOTE See annex L for a discussion of attributes that may be assigned a single value or a range of values.

4.2.326. Sphere

A Sphere is a type of Csg_element (see **4.2.84**) that is a solid bounded by a surface at a constant radius from a centre point.

4.2.327. Splitter

A Splitter is a vane which is placed inside an Hvac_fitting (see **4.2.157**) for the purpose of directing flow.

The data associated with a Splitter are the following:

— splitter_id;

— splitter_radius;

— splitter_radius_centre_offset;

— straight_portion_length.

4.2.327.1 splitter_id

This attribute specifies a unique identifier for the Splitter.

4.2.327.2 splitter_radius

This attribute specifies the radius of the Splitter.

4.2.327.3 splitter_radius_centre_offset

This attribute specifies the vertical distance from the throat centre to the Splitter centre.

4.2.327.4 straight_portion_length

This attribute specifies the length of the straight portion of the Splitter.

4.2.328. Spring_washer

A Spring_washer is a type of Washer (see **4.2.369**). The Spring_washer has one radial cut and both ends are pulled to opposite directions, and is furnished with the function of a coil spring.

 © ISO 2001 — All rights reserved

The data associated with a Spring_washer are the following

— thickness;

— outside_diameter.

4.2.328.1 thickness

The thickness specifies the distance between two faces of the material plate of the Spring_washer. It may be specified as a single value or as a range of values.

NOTE See annex L for a discussion of attributes that may be assigned a single value or a range of values.

4.2.328.2 outside_diameter

The outside_diameter specifies the external diameter of the Spring_washer. It may be specified as a single value or as a range of values.

NOTE See annex L for a discussion of attributes that may be assigned a single value or a range of values.

4.2.329. Square_to_round

A Square_to_round is a type of Csg_element (see **4.2.84**) that consists of a planar, rectangular surface, a planar circular surface parallel to the rectangular surface, and an enclosing, transitional surface that connects the boundaries of the rectangular surface and circular surface.

4.2.330. Stay

A Stay is a type of Reinforcing_component (see **4.2.296**) that is a tensile member placed between a run pipe and a branch pipe that are arranged in parallel. The Stay prevents the branch pipe from breaking or deforming.

NOTE Figure 62 depicts a typical Stay.

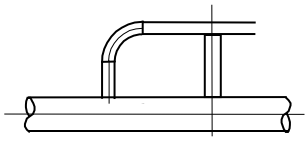

Figure 62 - Stay

The data associated with a Stay are the following:

— height.

The height is the distance between the location_point and the centreline of the branch pipe that is reinforced by the Stay.

4.2.331. Stopper

A Stopper is a type of Piping_support (see **4.2.248**) that consists of a plate perpendicularly fixed to the pipe axis and one or more strengthening plates for the perpendicular plate. The Stopper is used to prevent the pipe from moving.

© ISO 2001 — All rights reserved

NOTE Figure 63 depicts a typical Stopper.

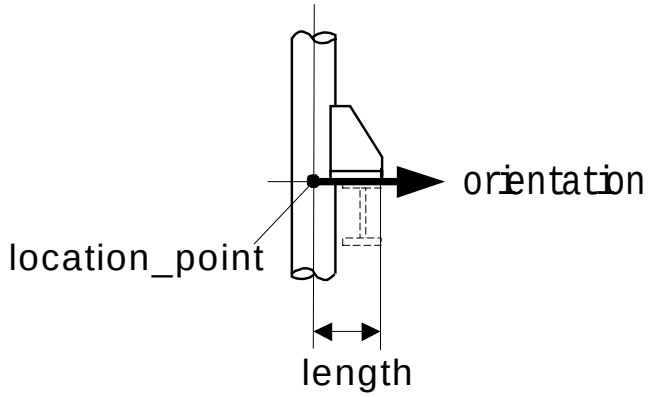

Figure 63 - Stopper

The data associated with a Stopper are the following:

— length.

The length is the distance between the outer face of the Stopper and the location_point.

4.2.332. Straight_pipe

A Straight_pipe is a type of Pipe (see **4.2.236**) that does not change the direction of fluid flow.

The data associated with a Straight_pipe are the following:

— end_to_end_cut_length;

— end_to_end_length.

4.2.332.1 end_to_end_cut_length

The end_to_end_cut_length is the length of the Straight_pipe for shop fabrication that takes into account extra length required for installation variations and the subtracted length for the difference between designed length and shop fabricated length.

EXAMPLE The root_gap of the Buttweld (see **4.2.16**) is an example of the difference between designed length and shop fabricated length.

4.2.332.2 end_to_end_length

The end_to_end_length specifies the external length of the Straight_pipe. It may be specified as a single value or as a range of values.

NOTE See annex L for a discussion of attributes that may be assigned a single value or a range of values.

4.2.333. Stream_design_case

 © ISO 2001 — All rights reserved

A Stream_design_case is the set of characteristics of a gas, liquid, vapour, or solid stream under a specific circumstance at the termination of a Piping_system_line_segment (see **4.2.252**) or a Plant_item_connector_occurrence (see **4.2.266**).

The data associated with a Stream_design_case are the following:

— description;

— flow_rate;

— pressure;

— stream_case_type;

— stream_data_reference;

— stream_design_id.

4.2.333.1 description

The description specifies a textual explanation or summary of the Stream_design_case.

4.2.333.2 flow_rate

The flow_rate specifies the stream volume, mass, or molar units per unit time. It may be specified as a single value or as a range of values.

NOTE See annex L for a discussion of attributes that may be assigned a single value or a range of values.

4.2.333.3 pressure

The pressure specifies the amount of force applied by the stream over a unit area. It may be specified as a single value or as a range of values.

NOTE See annex L for a discussion of attributes that may be assigned a single value or a range of values.

4.2.333.4 stream_case_type

The stream_case_type specifies the condition that the stream characteristics are being defined under. Stream_case_type is required for each Stream_design_case.

EXAMPLE Examples of stream_case_type conditions include normal, upset, and shutdown.

4.2.333.5 stream_data_reference

The stream_data_reference specifies the sources that provide the basis for the stream data.

4.2.333.6 stream_design_id

The stream_design_id specifies a unique identifier for the Stream_design_case. Stream_design_id is required for each Stream_design_case.

4.2.334. Stream_phase

© ISO 2001 — All rights reserved

A Stream_phase is the set of characteristics of a single gas, liquid, vapour, or solid stream that may be composed into a Stream_design_case (see **4.2.333**).

The data associated with a Stream_phase are the following:

— constituent_mole_fraction;

— constituents;

— phase_density;

— phase_fraction;

— specific_gravity;

— surface_tension;

— temperature;

— viscosity.

4.2.334.1 constituent_mole_fraction

The constituent_mole_fraction specifies the mass ratio of any given component to the whole for the Stream_phase.

4.2.334.2 constituents

The constituents specifies the various chemicals for the Stream_phase.

4.2.334.3 phase_density

The phase_density specifies the amount of mass per unit volume for the Stream_phase.

4.2.334.4 phase_fraction

The phase_fraction specifies the percentage of the mass of this Stream_phase in the Stream_design_case (see **4.2.333**).

4.2.334.5 specific_gravity

The specific_gravity specifies the ratio of the mass of a liquid to the mass of an equal volume of distilled water at 4 degrees Celsius.

4.2.334.6 surface_tension

The surface_tension specifies the force per unit area of the cohesive forces at or near the surface of a liquid Stream_phase.

4.2.334.7 temperature

 © ISO 2001 — All rights reserved

The temperature specifies the measure of molecular motion of a stream. It may be specified as a single value or as a range of values.

NOTE See annex L for a discussion of attributes that may be assigned a single value or a range of values.

4.2.334.8 viscosity

The viscosity specifies a measure of the resistance of a stream to deformation when subjected to a shear stress.

4.2.335. Structural_component

A Structural_component is a type of Plant_item (see **4.2.260**) that is an individually identifiable item or combination of items that is part of the Structural_system (see **4.2.337**).

NOTE Structural_component objects include structural steel members, load resisting walls, stairs, platforms foundations, supports (excluding pipe supports) for Plant_item (see **4.2.260**) objects, and have a primary function to transfer or resist live or dead loads.

The data associated with a Structural_component are the following:

— exact_section;

— size_designator;

— type.

4.2.335.1 exact_section

The exact_section specifies the detailed shape of a cross section of the structural element.

4.2.335.2 size_designator

The size_designator specifies the designation given to some types of plant structural elements to define cross-sectional size and general shape based on industry-standard practice.

EXAMPLE W30 X 132 is the U.S. American Institute of Steel Construction (AISC) designation for a wide flange beam of nominal 76.20 centimetres (30 inches) depth weighing 194.88 kilograms per metre (132 pounds per foot) of length. Similar designations exist for other plant structural elements such as angles, channels, and structural tee shapes. Also, like designations exist for other structural elements, e.g., reinforcing bar (#8 rebar).

4.2.335.3 type

The type specifies a designation that classifies a structural element based on its function in the Structural_system (see **4.2.337**).

EXAMPLE Examples of structural element types include beam, column, brace, support, grade beam, and pile.

4.2.336. Structural_load_connector

A Structural_load_connector is a type of Plant_item_connector (see **4.2.265**) that connects two Structural_component (see **4.2.335**) objects for the purpose of load transfer.

© ISO 2001 — All rights reserved

The data associated with a Structural_load_connector are the following:

— type.

The type specifies either a shear, moment, or shear and moment type of load at the connector.

4.2.337. Structural_system

A Structural_system is a type of Plant_system (see **4.2.276**) that is an assembly of one or more Structural_component (see **4.2.335**) objects and Structural_load_connector (see **4.2.336**) objects.

The data associated with a Structural_system are the following:

— type.

The type specifies a designation that classifies the Structural_system based on the kind of service that it provides.

4.2.338. Stub_in

A Stub_in is a type of Piping_connector (see **4.2.242**) that consists of the welding of two Piping_components (see **4.2.240**) where a Male_end (see **4.2.215**) of one Piping_component is inserted in a Branch_hole (see **4.2.12**) of the other Piping_component.

NOTE Figure 64 depicts a typical Stub_in.

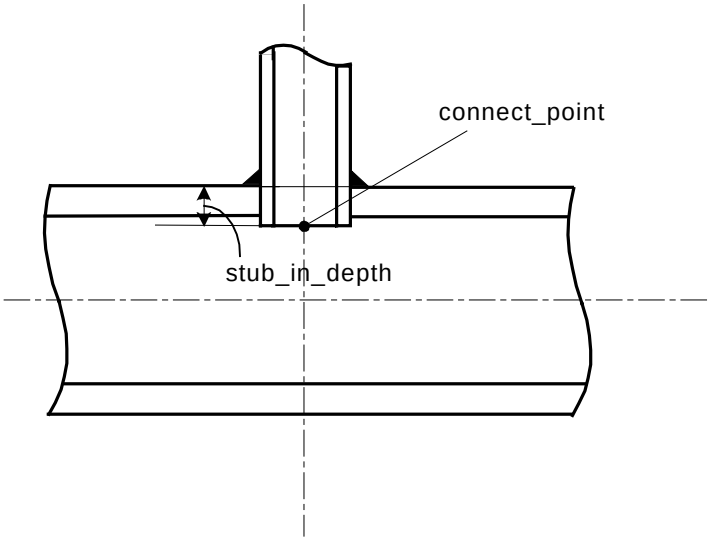

Figure 64 - Stub_in

The data associated with a Stub_in are the following

— stub_in_depth.

The stub_in_depth specifies the distance from the end of the stubbed-in Piping_component (see **4.2.240**) to the Point (see **4.2.281**) where the centre line of the stubbed-in Piping_component intersects the outer surface of the other Piping_component. It may be specified as a single value or as a range of values.

 © ISO 2001 — All rights reserved

NOTE 1 See annex L for a discussion of attributes that may be assigned a single value or a range of values.

NOTE 2 The attribute for stub_in_depth will only be used when the Piping_component (see **4.2.240**) participates in a connection.

4.2.339. Stud_bolt

A Stud_bolt is a type of a Bolt (see **4.2.8**) that has screw threads on both ends.

The data associated with a Stud_bolt are the following

— length.

The length specifies the distance from the tip of one screw thread to the tip of the other screw thread of the Stud_bolt. It may be specified as a single value or as a range of values.

NOTE See annex L for a discussion of attributes that may be assigned a single value or a range of values.

4.2.340. Sub_plant_relationship

A Sub_plant_relationship is the relationship between Plant (see **4.2.258**) objects and sub-plants and defines their relative locations.

EXAMPLE Examples of Sub_plant_relationships include manufacturing Line (see **4.2.196**), Train (see **4.2.356**), and Plant (see **4.2.258**) unit.

The data associated with a Sub_plant_relationship are the following:

— component;

— contains;

— location_and_orientation.

4.2.340.1 component

The component specifies the plant_id of the child Plant (see **4.2.258**) in the Sub_plant_relationship.

4.2.340.2 contains

The contains specifies the plant_id of the parent Plant (see **4.2.258**) in the Sub_plant_relationship.

4.2.340.3 location_and_orientation

The location_and_orientation specifies the relative position and orientation of the sub-plant within the Plant (see **4.2.258**).

4.2.341. Supplied_equipment

© ISO 2001 — All rights reserved

A Supplied_equipment is an Equipment (see **4.2.104**) that is, or is to be, provided by a Supplier (see **4.2.342**) for use in a Plant (see **4.2.258**).

The data associated with a Supplied_equipment are the following:

— delivery_date;

— purchase_order_number;

— requisition_number.

4.2.341.1 delivery_date

The delivery_date specifies the calendar day-month-year and time when the Equipment (see **4.2.104**) was, or is, scheduled to be delivered to the Site (see **4.2.313**).

NOTE A specific ordering of the day, month, and year within the date is not required.

4.2.341.2 purchase_order_number

The purchase_order_number specifies an identifier assigned to the Equipment (see **4.2.104**) purchase order.

4.2.341.3 requisition_number

The requisition_number specifies an identifier assigned to a written request for a piece of Equipment (see **4.2.104**).

4.2.342. Supplier

A Supplier is the organization that produces a piece of Equipment (see **4.2.104**) or publishes a catalogue.

The data associated with a Supplier are the following:

— supplier_id;

— vendor_name.

4.2.342.1 supplier_id

The supplier_id specifies a unique identifier for the Supplier. Supplier_id is required for each Supplier.

4.2.342.2 vendor_name

The vendor_name specifies a textual label used by the company or organization that is providing the Equipment (see **4.2.104**).

4.2.343. Support_component

 © ISO 2001 — All rights reserved

A Support_component is a type of Plant_item (see **4.2.260**) that is designed to support other Plant_item objects. This support includes carrying the weight of the Plant_item, including internal fluids and external insulation, permitting thermal expansion and contraction, and dampening any vibrational or seismic forces applied to the Plant_item. Each Support_component may be a Cable_support (see **4.2.18**).

EXAMPLE If a Support_component is not a Cable_support (see **4.2.18**), it may be a branch reinforcing pad, a hanger, a footer, pipe rack, or anything that supports the weight of a Plant_item (see **4.2.260**).

4.2.344. Support_constraints

A Support_constraints is a limitation on the movement of a Plant_item (see **4.2.260**) support, normally in specified directions.

The data associated with a Support_constraints are the following:

— gap;

— K;

— restrained.

4.2.344.1 gap

The gap specifies the allowable space between a Plant_item (see **4.2.260**) and a Plant_item support.

4.2.344.2 K

The K specifies the ratio between the force applied to the support and the support deflection produced by that force.

4.2.344.3 restrained

The restrained specifies a boolean indicator that specifies whether the Plant_item (see **4.2.260**) support limits movement of the Plant_item in a specified direction.

4.2.345. Support_usage

A Support_usage is the relationship between a defined load bearing element and the Plant_item (see **4.2.260**) that it provides support for. Each Support_usage may be a Support_usage_-connection (see **4.2.346**).

The data associated with a Support_usage are the following:

— detail_sheet_reference;

— function.

4.2.345.1 detail_sheet_reference

© ISO 2001 — All rights reserved

The detail_sheet_reference specifies the support detail drawings that define the support.

4.2.345.2 function

The function specifies the role or purpose of using the Plant_item (see **4.2.260**) as a support.

EXAMPLE Examples of function designations include anchor, guide, restraint, and support.

4.2.346. Support_usage_connection

A Support_usage_connection is a type of Support_usage (see **4.2.345**) that specifies the actual Plant_item_connection_occurrence (see **4.2.264**) where the support occurs.

4.2.347. Surface

A Surface is a type of Wire_and_surface_element (see **4.2.372**) that is a set of connected points in 3D geometric space that is always locally 2D, but need not be a manifold.

NOTE Surface has many subtypes. Besides being a self-contained object, Surface is used in the definition of other geometric objects such as Point (see **4.2.281**) objects and Curve (see **4.2.85**) objects. It will not be instantiated as it has no attributes.

4.2.348. Survey_point

A Survey_point is a particular location (position and elevation) on a Site (see **4.2.313**) relative to a known geographic location.

NOTE Survey_point data are established by performing a survey. The collection of Survey_point data can be interpolated to generate a faceted or surface representation of the topography of the Site (see **4.2.313**).

4.2.349. Swept_bend_pipe

A Swept_bend_pipe is a type of Pipe (see **4.2.236**) that is bent to alter the direction of flow of its contents.

The data associated with a Swept_bend_pipe are the following:

— wall_thinning_allowance;

— centreline_radius;

— sweep_angle.

4.2.349.1 wall_thinning_allowance

The wall_thinning_allowance specifies the amount of pipe wall material that must be provided to compensate for reduction in wall thickness of the Pipe (see **4.2.236**) caused by bending.

NOTE As a Pipe (see **4.2.236**) is bent, the wall thickness on the outside portion of the bend will reduce as material stretches.

 © ISO 2001 — All rights reserved

4.2.349.2 centreline_radius

The centreline_radius specifies the radius of the Swept_bend_pipe circular arc as measured to the centreline of the Pipe (see **4.2.236**).

4.2.349.3 sweep_angle

The sweep_angle specifies the subtended angle of the Swept_bend_pipe circular arc.

4.2.350. System_space

A System_space is a type of Plant_volume (see **4.2.278**) that is used to describe or allocate a volume of space for use by a Plant_system (see **4.2.276**).

EXAMPLE Examples of System_space type designations include electrical chases, HVAC chases, and instrumentation and control chases.

4.2.351. Tee

A Tee is a type of Fitting (see **4.2.118**) that is a single branched outlet Fitting consisting of a straight run and a perpendicular branch used to permit straight-through and 90-degree flow.

NOTE Figure 65 depicts a typical butt-weld Tee.

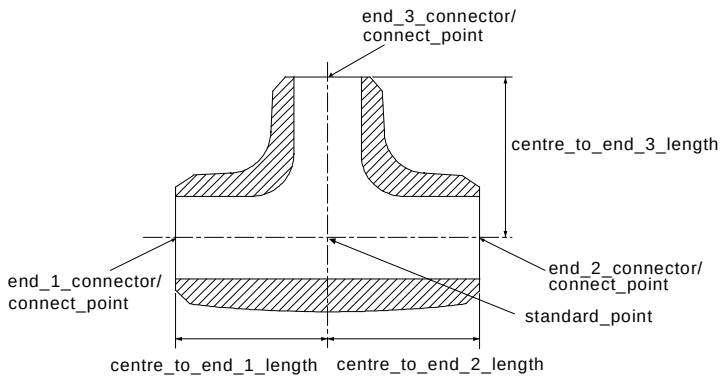

Figure 65 - Tee

The data associated with a Tee are the following:

— centre_to_end_1_length;

— centre_to_end_2_length;

— centre_to_end_3_length;

— end_1_connector;

— end_2_connector;

© ISO 2001 — All rights reserved

— end_3_connector.

4.2.351.1 centre_to_end_1_length

The centre_to_end_1_length specifies the distance from the intersection of the Tee straight-run centreline and branch-run centreline to the end-one face. It may be specified as a single value or as a range of values.

NOTE See annex L for a discussion of attributes that may be assigned a single value or a range of values.

4.2.351.2 centre_to_end_2_length

The centre_to_end_2_length specifies the distance from the intersection of the Tee straight-run centreline and branch-run centreline to the end-two face. It may be specified as a single value or as a range of values.

NOTE See annex L for a discussion of attributes that may be assigned a single value or a range of values.

4.2.351.3 centre_to_end_3_length

The centre_to_end_3_length specifies the distance from the intersection of the Tee straight-run centreline and branch-run centreline to the end-three face. It may be specified as a single value or as a range of values.

NOTE See annex L for a discussion of attributes that may be assigned a single value or a range of values.

4.2.351.4 end_1_connector

The end_1_connector specifies the Piping_connector (see **4.2.242**) along the straight-run centreline designated as end one.

4.2.351.5 end_2_connector

The end_2_connector specifies the Piping_connector (see **4.2.242**) along the straight-run centreline designated as end two.

4.2.351.6 end_3_connector

The end_3_connector specifies the Piping_connector (see **4.2.242**) along the branch-run centreline designated as end three.

4.2.352. Threaded

A Threaded is a type of Piping_connector (see **4.2.242**) that is a physical feature of a Plant_item (see **4.2.260**) that allows partial insertion of a male threaded connector.

NOTE Figure 66 depicts a typical Threaded end.

 © ISO 2001 — All rights reserved

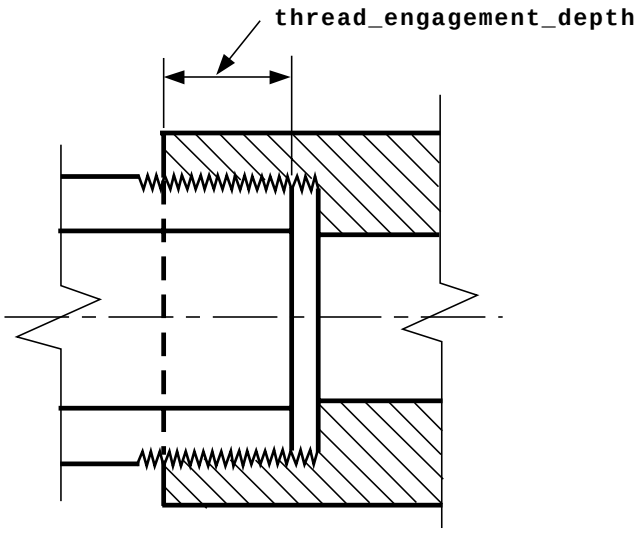

Figure 66 - Threaded

The data associated with a Threaded are the following:

— thread_engagement_depth.

The thread_engagement_depth specifies the insertion distance of the male threaded connector into a female threaded connector.

4.2.353. Threaded_flange

A Threaded_flange is a type of Flange (see **4.2.119**) whose bore is Threaded (see **4.2.352**) and that is connected to a Pipe (see **4.2.236**) by screwing a threaded Pipe end into the Flange.

NOTE Figure 67 depicts a typical Threaded_flange.

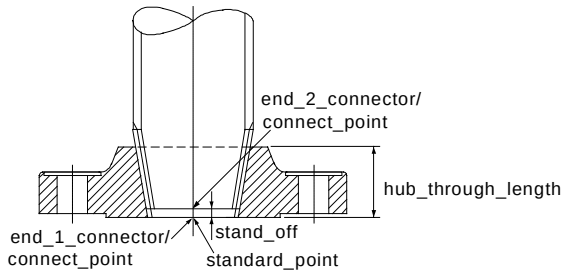

Figure 67 - Threaded_flange

4.2.354. Toothed_lock_washer

© ISO 2001 — All rights reserved

A Toothed_lock_washer is a type of Washer (see **4.2.369**). The Toothed_lock_washer has teeth on its outer or inner, or both circular edges. The teeth are bent or twisted to improve electric conductivity when fastened.

The data associated with a Toothed_lock_washer are the following:

— thickness;

— outside_diameter.

4.2.354.1 thickness

The thickness specifies the distance between two faces of the material plate of the Toothed_lock_washer. It may be specified as a single value or as a range of values.

NOTE See annex L for a discussion of attributes that may be assigned a single value or a range of values.

4.2.354.2 outside_diameter

The outside_diameter specifies the diameter of a circumscribed circle of the Toothed_lock_washer. It may be specified as a single value or as a range of values.

NOTE See annex L for a discussion of attributes that may be assigned a single value or a range of values.

4.2.355. Torus

A Torus is a type of Csg_element (see **4.2.84**) that is defined by sweeping the area of a circle (with minor radius) about a larger circle. A Torus may be an Reducing_torus (see **4.2.294**). A Torus may be a Trimmed_torus (see **4.2.362**).

4.2.356. Train

A Train is a type of Plant (see **4.2.258**) that consists of connected Plant_items (see **4.2.260**) that perform a distinct function. It is one of two or more distinct but similar portions of a system that perform the same function.

4.2.357. Trimmed_block

A Trimmed_block is a type of Csg_element (see **4.2.84**) that is formed by cutting a Block (see **4.2.7**) with one or more planes and removing one or more of the resulting sections.

4.2.358. Trimmed_cone

A Trimmed_cone is a type of Csg_element (see **4.2.84**) that is formed by cutting a Cone (see **4.2.68**) with one or more planes and removing one or more of the resulting sections.

4.2.359. Trimmed_cylinder

A Trimmed_cylinder is a type of Csg_element (see **4.2.84**) that is formed by cutting a Cylinder (see **4.2.86**) with one or more planes and removing one or more of the resulting sections.

 © ISO 2001 — All rights reserved

4.2.360. Trimmed_pyramid

A Trimmed_pyramid is a type of Csg_element (see **4.2.84**) that is formed by cutting a Pyramid (see **4.2.288**) with one or more planes and removing one or more of the resulting sections.

4.2.361. Trimmed_sphere

A Trimmed_sphere is a type of Csg_element (see **4.2.84**) that is formed by cutting a Sphere (see **4.2.326**) with one or more planes and removing one or more of the resulting sections.

4.2.362. Trimmed_torus

A Trimmed_torus is a type of Csg_element (see **4.2.84**) that is formed by cutting a Torus (see **4.2.355**) with one or more planes and removing one or more of the resulting sections.

4.2.363. Trunnion

A Trunnion is a type of Piping_support (see **4.2.248**) that is attached to a vertical pipe. The main body of the Trunnion is typically pipe, but shape steel or plate is occasionally used as the material of the part. The Trunnion is placed horizontally and supports the weight that acts perpendicularly to the axis of the main body.

NOTE Figure 68 depicts a typical Trunnion.

.

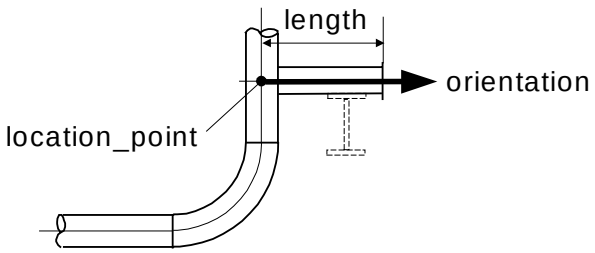

Figure 68 - Trunnion

The data associated with a Trunnion are the following:

— length.

The length specifies the distance between the outer face of the Trunnion and the location_point

4.2.364. Union

A Union is a type of Fitting (see **4.2.118**) composed of multiple pieces that allows the joining or separating of piping without rotating the piping. It consists of two internally Threaded (see **4.2.352**) ends and a centre piece that draws the two ends together when rotated.

NOTE Figure 69 depicts a typical socket-weld Union.

© ISO 2001 — All rights reserved

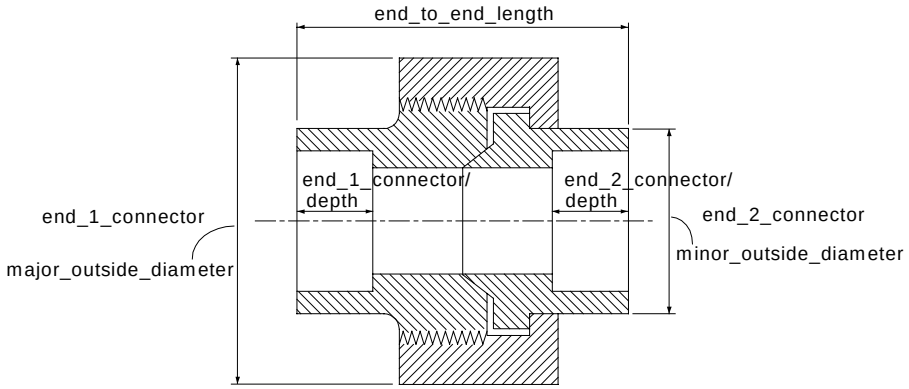

Figure 69 - Union

The data associated with a Union are the following:

— end_1_connector;

— end_2_connector;

— end_to_end_length;

— major_outside_diameter;

— minor_outside_diameter.

4.2.364.1 end_1_connector

The end_1_connector specifies the Piping_connector (see **4.2.242**) that corresponds to the end with the major_outside_diameter.

4.2.364.2 end_2_connector

The end_2_connector specifies the Piping_connector (see **4.2.242**) that corresponds to the end with the minor_outside_diameter.

4.2.364.3 end_to_end_length

The end_to_end_length specifies the external distance between the end-one face and the end-two face. It may be specified as a single value or as a range of values.

NOTE See annex L for a discussion of attributes that may be assigned a single value or a range of values.

4.2.364.4 major_outside_diameter

The major_outside_diameter specifies the maximum diameter of the Union along the centreline, normally at the joint between the two internal pieces of the Union. It may be specified as a single value or as a range of values.

NOTE See annex L for a discussion of attributes that may be assigned a single value or a range of values.

4.2.364.5 minor_outside_diameter

 © ISO 2001 — All rights reserved

The minor_outside_diameter specifies the external diameter of the Union at the end-one and end-two connections. It may be specified as a single value or as a range of values.

NOTE See annex L for a discussion of attributes that may be assigned a single value or a range of values.

4.2.365. Unit

A Unit is a type of Plant (see **4.2.258**) that is the designation (name or number) for a Plant or portion of a Plant that produces the same product by different means.

NOTE A Unit may perform a unique function for the Plant (see **4.2.258**) such as oxygen production, or there may be several Units that perform the same function such as multiple Units in a power generation installation. The underground or offsite portion of a Plant may be a Unit.

4.2.366. User_defined_attribute_value

A User_defined_attribute_value is a name-value pair for any characteristic that is not specified by an explicit attribute of an application object. The User_defined_attribute_value enables the exchange of characteristics and their values that are not defined explicitly by an application object attribute.

The data associated with a User_defined_attribute_value are the following:

— name;

— value.

4.2.366.1 name

The name specifies a label that characterizes the User_defined_attribute_value.

4.2.366.2 value

The value specifies the data for the User_defined_attribute_value.

4.2.367. Valve

A Valve is a type of Piping_component (see **4.2.240**) that provides isolation or controls fluid direction or flow rate.

The data associated with a Valve are the following:

— actuator_type;

— operation_mode;

— type;

— valve_stem_orientation;

— end_to_end_length.

© ISO 2001 — All rights reserved

4.2.367.1 actuator_type

The actuator_type specifies a descriptive designation of device or mechanism used to open, position, or close a Valve.

4.2.367.2 operation_mode

The operation_mode specifies the failure mode, as in the state of being open or closed when the actuator either has no power or is in the default position.

4.2.367.3 type

The type specifies a designation that classifies a Valve based on its purpose that defines the design of its internals and externals.

EXAMPLE Examples of Valve type designations include gate, globe, check, and relief.

4.2.367.4 valve_stem_orientation

The valve_stem_orientation specifies the centreline direction of the Valve stem.

4.2.367.5 end_to_end_length

The end_to_end_length specifies the distance between connecting faces of a Valve.

4.2.368. Vector

A Vector is a type of Curve (see **4.2.85**). It is specifies a direction in 3D space.

4.2.369. Washer

A Washer is a type of Bolt_and_nut_component (see **4.2.9**) that is used to improve the tightness of a screw fastener. The Washer is a flattened, ring-shaped device.

The data associated with a Washer are the following:

— washer_type.

The washer_type specifies a classification of the Washer based on its shape characteristics.

EXAMPLE Examples of washer_type designations include plain, spring, and toothed_lock.

4.2.370. Weld_neck_flange

A Weld_neck_flange is a type of Flange (see **4.2.119**) with a tapered hub bored to match the inside diameter of matching Plant_item (see **4.2.260**) and with the hub beveled for butt welding to the Plant_item.

NOTE Figure 70 depicts a typical Weld-neck flange.

 © ISO 2001 — All rights reserved

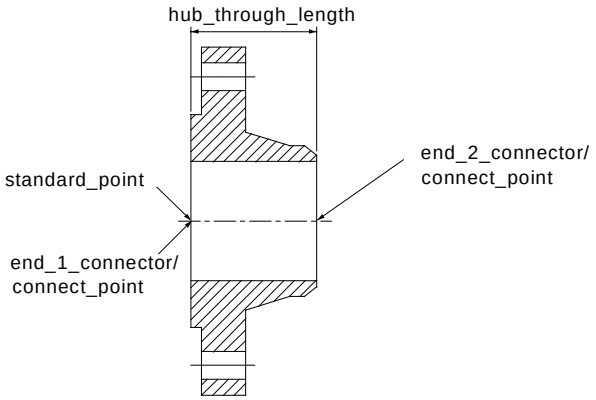

Figure 70 - Weld_neck_flange

4.2.371. Weld_neck_jacket_flange

A Weld_neck_jacket_flange is a type of Weld_neck_flange (see **4.2.370**) that is welded onto a Piping_spool (see **4.2.246**) that is jacketed closing off the jacket.

NOTE Figure 71 depicts a typical Weld_neck_jacket_flange.

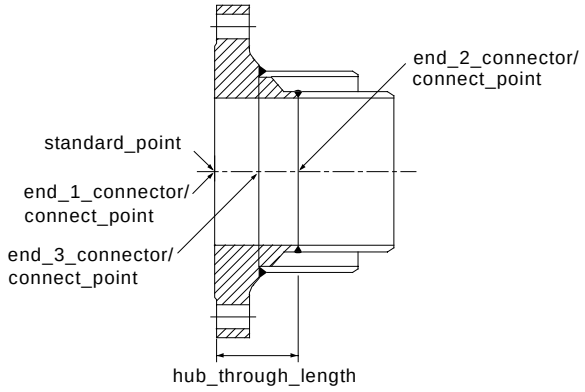

Figure 71 - Weld_neck_jacket_flange

The data associated with a Weld_neck_jacket_flange are the following:

— end_3_connector.

The end_3_connector specifies the Piping_ connector (see **4.2.242**) where the outside Pipe (see **4.2.236**) of the jacketed piping connects to the Flange (see **4.2.119**).

4.2.372. Wire_and_surface_element

A Wire_and_surface_element is a type of Shape_representation_element (see **4.2.310**) that is composed of geometric elements. Each Wire_and_surface_element is either: a Curve (see **4.2.85**), a Point (see **4.2.281**), or a Surface (see **4.2.347**).

4.2.373. Y_type_lateral

© ISO 2001 — All rights reserved

A Y_type_lateral is a type of Fitting (see **4.2.118**) that is a three-way fitting whose branches are at equal angles from the straight-run centreline forming a flow passage shaped like the letter "Y".

NOTE Figure 72 depicts a typical Y_type_lateral.

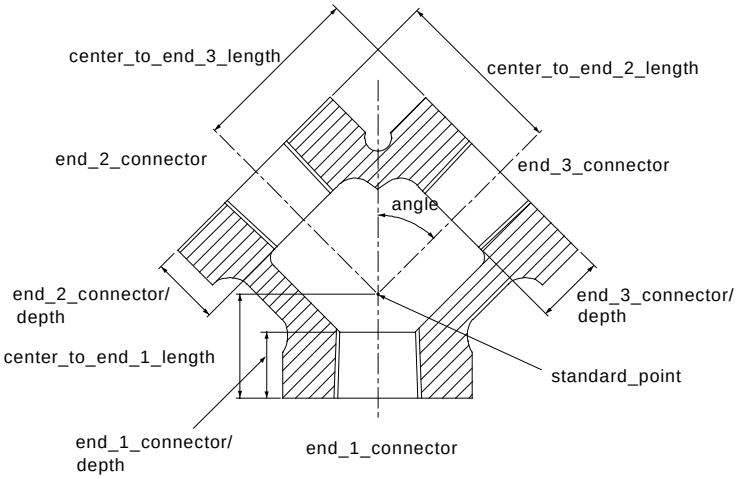

Figure 72 - Y_type_lateral

The data associated with a Y_type_lateral are the following:

— angle;

— centre_to_end_1_length;

— centre_to_end_2_length;

— centre_to_end_3_length;

— end_1_connector;

— end_2_connector;

— end_3_connector.

4.2.373.1 angle

The angle specifies the angle of the branch portions of the Y_type_lateral with respect to the straight run. It may be specified as a single value or as a range of values.

NOTE See annex L for a discussion of attributes that may be assigned a single value or a range of values.

4.2.373.2 centre_to_end_1_length

The centre_to_end_1_length specifies the distance from the intersection of the Y_type_lateral straight-run centreline and branch-run centreline to the end-one working Point (see **4.2.281**). It may be specified as a single value or as a range of values.

NOTE See annex L for a discussion of attributes that may be assigned a single value or a range of values.

 © ISO 2001 — All rights reserved

4.2.373.3 centre_to_end_2_length

The centre_to_end_2_length specifies the distance from the intersection of the Y_type_lateral straight-run centreline and branch-run centreline to the end-two working Point (see **4.2.281**). It may be specified as a single value or as a range of values.

NOTE See annex L for a discussion of attributes that may be assigned a single value or a range of values.

4.2.373.4 centre_to_end_3_length

The centre_to_end_3_length specifies the distance from the intersection of the Y_type_lateral straight-run centreline and branch-run centreline to the end-three working Point (see **4.2.281**). It may be specified as a single value or as a range of values.

NOTE See annex L for a discussion of attributes that may be assigned a single value or a range of values.

4.2.373.5 end_1_connector

The end_1_connector specifies the Piping_connector (see **4.2.242**) designated as end one.

4.2.373.6 end_2_connector

The end_2_connector specifies the Piping_connector (see **4.2.242**) designated as end two.

4.2.373.7 end_3_connector

The end_3_connector specifies the Piping_connector (see **4.2.242**) designated as end three.

© ISO 2001 — All rights reserved

4.3. Application assertions

This subclause specifies the application assertions for the plant spatial configuration application protocol. Application assertions specify the relationships among application objects, the cardinality of the relationships, and the rules required for the integrity and validity of the application objects and UoFs. The application assertions and their definitions are given below.

4.3.1. Analysis_data_point to Plant_item

Each Analysis_data_point is defined for zero, one or many Plant_item objects. Each Plant_item has zero, one or many Analysis_data_point objects.

4.3.2. Bolt_and_nut_set to Bolt_and_nut_component

Each Bolt_and_nut_set consists of one or more Bolt_and_nut_component objects. Each Bolt_and_nut_component is contained in exactly one Bolt_and_nut_set.

4.3.3. Breakline to Survey_point

Each Breakline is defined by zero, one or many Survey_point objects. Each Survey_point defines zero, one, or many Breakline objects.

4.3.4. Building to Location_in_building

Each Building is a reference frame for zero, one or many Location_in_building objects. Each Location_in_building has a reference frame provided by exactly one Building object.

4.3.5. Building to Reference_geometry

Each Building has column lines defined by zero, one or many Reference_geometry objects. Each Reference_geometry defines column lines for of zero or one Building object.

4.3.6. Cable to Cableway_component

Each Cable runs through zero, one or many Cableway_component objects. Each Cableway_component contains zero, one or many Cable objects.

4.3.7. Cableway_size_description to Cableway_component

Each Cableway_size_description describes size of zero, one or many Cableway_component objects. Each Cableway_component has a size described by exactly one Cableway_size_description object.

 © ISO 2001 — All rights reserved

4.3.8. Catalogue_connector to Connector_definition

Each Catalogue_connector defines zero, one or many Connector_definition objects. . Each Connector_definition is defined by zero or one Catalogue_connector object.

4.3.9. Catalogue_definition to Catalogue_connector

Each Catalogue_definition contains zero, one or many Catalogue_connector objects. Each Catalogue_connector is contained by exactly one Catalogue_definition object.

4.3.10. Catalogue_definition to Catalogue_item

Each Catalogue_definition contains zero, one or many Catalogue_item objects. Each Catalogue_item is contained by exactly one Catalogue_definition object.

4.3.11. Catalogue_item to Catalogue_item_substitute

Each Catalogue_item has zero, one or many Catalogue_item_substitute objects. Each Catalogue_item_substitute is exactly one Catalogue_item object.

Each Catalogue_item is a substitute in zero, one or many Catalogue_item_substitute objects. Each Catalogue_item_substitute identifies a substitute for exactly one Catalogue_item object.

4.3.12. Catalogue_item to Plant_item_definition

Each Catalogue_item defines zero or one Plant_item_definition objects. Each Plant_item_definition is defined by zero or one Catalogue_item object.

4.3.13. Change to Change_item

Each Change changes one or more Change_item objects. Each Change_item is changed by zero, one, or many Change objects.

4.3.14. Change to Change_life_cycle_stage_usage

Each Change is assigned by one or more Change_life_cycle_stage_usage objects. Each Change_life_cycle_stage_usage assigns exactly one Change.

4.3.15. Change_life_cycle_stage to Change_life_cycle_stage_sequence

Each Change_life_cycle_stage is the predecessor in zero or one Change_life_cycle_stage_sequence objects. Each Change_life_cycle_stage_sequence has exactly one Change_life_cycle_stage as the predecessor.

© ISO 2001 — All rights reserved

Each Change_life_cycle_stage is the successor in zero, one or many Change_life_cycle_stage_sequence objects. Each Change_life_cycle_stage_sequence has exactly one Change_life_cycle_stage as the successor.

4.3.16. Change_life_cycle_stage to Change_life_cycle_stage_usage

Each Change_life_cycle_stage has changes assigned by zero or one Change_life_cycle_stage_usage objects. Each Change_life_cycle_stage_usage assigns changes for exactly one Change_life_cycle_stage.

4.3.17. Change_life_cycle_stage_usage to Change_approval

Each Change_life_cycle_stage_usage is approved by zero or one Change_approval objects. Each Change_approval approves exactly one Change_life_cycle_stage_usage.

4.3.18. Clamp_set to Bolt_and_nut_component

Each Clamp_set consists of one or more Bolt_and_nut_component objects. Each Bolt_and_nut_component is associated with zero or one Clamp_set.

4.3.19. Clamp_set to Clamp

Each Clamp_set consists of one or more Clamp objects. Each Clamp is associated with exactly one Clamp_set.

4.3.20. Connected_collection to Plant_item_connection

Each Connected_collection contains zero, one or many Plant_item_connection objects. Each Plant_item_connection participates in zero, one or many Connected_collection objects.

4.3.21. Connection_definition to Connector_definition

Each Connection_definition connects two or more Connector_definition objects. Each Connector_definition is connected by exactly one Connection_definition object.

4.3.22. Connection_definition to Functional_connection_definition_satisfaction

Each Connection_definition is functional requirements for zero, one or many Functional_connection_definition_satisfaction objects. Each Functional_connection_definition_satisfaction gets the functional requirements from exactly one Connection_definition object.

 © ISO 2001 — All rights reserved

Each Connection_definition satisfies requirements for zero, one or many Functional_connection_definition_satisfaction objects. Each Functional_connection_definition_satisfaction has requirements satisfied by exactly one Connection_definition object.

4.3.23. Connection_definition to Plant_item_connection_occurrence

Each Connection_definition defines zero, one or many Plant_item_connection_occurrence objects. Each Plant_item_connection_occurrence is defined by zero or one Connection_definition object.

4.3.24. Connection_material to Bolt_and_nut_set

Each Connection_material includes zero, one or many Bolt_and_nut_set objects. Each Bolt_and_nut_set is used in zero, one or many Connection_material objects.

4.3.25. Connection_material to Clamp_set

Each Connection_material includes zero, one or many Clamp_set objects. Each Clamp_set is used in zero, one or many Connection_material objects.

4.3.26. Connector_definition to Catalogue_connector

Each Connector_definition is used as zero, one or many Catalogue_connector objects. Each Catalogue_connector is zero or one Connector_definition object.

4.3.27. Connector_definition to Functional_connector_definition_satisfaction

Each Connector_definition satisfies requirements for zero, one or many Functional_connector_definition_satisfaction objects. Each Functional_connector_definition_satisfaction has requirements satisfied by exactly one Connector_definition object.

Each Connector_definition is functional requirements for zero, one or many Functional_connector_definition_satisfaction objects. Each Functional_connector_definition_satisfaction gets the functional requirements from exactly one Connector_definition object.

4.3.28. Connector_definition to Plant_item_connector_occurrence

Each Connector_definition defines zero, one or many Plant_item_connector_occurrence objects. Each Plant_item_connector_occurrence is defined by zero or one Connector_definition object.

4.3.29. Design_project to Project_design_assignment

© ISO 2001 — All rights reserved

Each Design_project is performed in one or more Project_design_assignment objects. Each Project_design_assignment assigns a task to exactly one Pesign_project object.

4.3.30. Document to Connection_inspection_record

Each Document has inspection information defined by zero, one or many Connection_inspection_record objects. Each Connection_inspection_record defines inspection information for zero, one or many Document objects.

4.3.31. Document to Piping_spool_inspection_record

Each Document has inspection information defined by zero, one or many Piping_spool_inspection_record objects. Each Piping_spool_inspection_record defines inspection information for zero, one or many Document objects.

4.3.32. Ducting_system to Stream_design_case

Each Ducting_system transports material for zero, one or many Stream_design_case objects. Each Stream_design_case defines potential material for zero, one or many Ducting_system objects.

4.3.33. Equipment to Equipment_trim_piping

Each Equipment requires zero, one or many Equipment_trim_piping objects. Each Equipment_trim_piping is required by exactly one Equipment object.

4.3.34. Equipment to Supplied_equipment

Each Equipment is used as zero, one or many Supplied_equipment objects. Each Supplied_equipment is exactly one Equipment object.

4.3.35. Facet_trigon to Survey_point

Each Facet_trigon is defined by exactly three Survey_point objects. Each Survey_point defines zero, one or many Facet_trigon objects.

4.3.36. Faceted_surface_representation to Facet_trigon

Each Faceted_surface_representation is composed of one or more Facet_trigon objects. Each Facet_trigon is a component of exactly one Faceted_surface_representation object.

4.3.37. Functional_connector to Functional_connector_occurrence_satisfaction

Each Functional_connector is the functional requirements for zero, one, or many Functional_connector_occurrence_satisfaction objects. Each Functional_connector_occurrence_satisfaction gets the functional requirements from exactly one Functional_connector object.

 © ISO 2001 — All rights reserved

4.3.38. Functional_design_view to Functional_plant_item_satisfaction

Each Functional_design_view is functional requirements for zero, one or many Functional_plant_item_satisfaction objects. Each Functional_plant_item_satisfaction gets the functional requirements from exactly one Functional_design_view object.

4.3.39. Functional_plant to Functional_plant_satisfaction

Each Functional_plant is functional requirements for zero, one or many Functional_plant_satisfaction objects. Each Functional_plant_satisfaction gets the functional requirements from exactly one Functional_plant object.

4.3.40. Functional_plant to Plant_system

Each Functional_plant is made up of zero, one or many Plant_system objects. Each Plant_system is part of exactly one Functional_plant object.

4.3.41. Functional_design_view to Functional_plant_item_satisfaction

Each Functional_design_view is the functional requirements for zero, one or many Functional_plant_item_satisfaction. Each Functional_plant_item_satisfaction gets the functional requirements from exactly one Functional_design_view.

4.3.42. Hvac_component to Hvac_access_opening

Each Hvac_component object is accessed through zero, one or many Hvac_access_opening objects. Each Hvac_access_opening object belongs to exactly one Hvac_component object.

4.3.43. Hvac_component to Hvac_component_thickness

Each Hvac_component has skin thickness of zero, one or many Hvac_component_thickness objects. Each Hvac_component_thickness defines the skin thickness for exactly one Hvac_component object

4.3.44. Hvac_connector to Hvac_connector_service_characteristic

Each Hvac_connector has zero, one or many Hvac_connector_service_characteristic objects. Each Hvac_connector_service_characteristic belongs to exactly one Hvac_connector object.

4.3.45. Hvac_connector to Hvac_cross_section

Each Hvac_connector defines cross section of zero, one or many Hvac_cross_section objects. Each Hvac_cross_section is defined by exactly one Hvac_connector object.

© ISO 2001 — All rights reserved

4.3.46. Hvac_connector_service_characteristic to Service_operating_case

Each Hvac_connector_service_characteristic supports zero, one or many Service_operating_case objects. Each Service_operating_case is associated with exactly one Hvac_connector_service_characteristic object.

4.3.47. Hvac_elbow_90deg_reducing to Splitter

Each Hvac_elbow_90deg_reducing has zero, one or many Splitter objects. Each Splitter reduces the potential turbulence for exactly one Hvac_elbow_90deg_reducing.

4.3.48. Hvac_elbow_centred to Splitter

Each Hvac_elbow_centred has zero, one or many Splitter objects. Each Splitter reduces the potential turbulence for exactly one Hvac_elbow_centred.

4.3.49. Hvac_elbow_mitre to Splitter

Each Hvac_elbow_mitre has zero, one or many Splitter objects. Each Splitter reduces the potential turbulence for exactly one Hvac_elbow_mitre.

4.3.50. Hvac_equipment to Hvac_flow_control_device

Each Hvac_equipment object is controlled by zero, one or many Hvac_flow_control_device objects. Each Hvac_flow_control_device object controls zero, one or many Hvac_equipment objects.

4.3.51. Hvac_instrument to Hvac_flow_control_device

Each Hvac_instrument object provides data for zero, one or many Hvac_flow_control_device objects. Each Hvac_flow_control_device object is associated with zero or one Hvac_instrument objects.

4.3.52. Hvac_offset_centred to Splitter

Each Hvac_offset_centred has zero, one or many Splitter objects. Each Splitter reduces the potential turbulence for exactly one Hvac_offset_centred.

4.3.53. Hvac_plant_item_branch_connector to Hvac_plant_item_branch_connection

Each Hvac_plant_item_branch_connector is connected to zero or one Hvac_plant_item_branch_connection . Each Hvac_plant_item_branch_connection is associated with exactly one Hvac_plant_item_branch_connector.

 © ISO 2001 — All rights reserved

4.3.54. Hvac_plant_item_connector to Hvac_plant_item_connection

Each Hvac_plant_item_connector is connected to exactly two Hvac_plant_item_connection objects. Each Hvac_plant_item_connection is associated with exactly one Hvac_plant_item_connector.

4.3.55. Hvac_plant_item_termination to Hvac_plant_item_connection

Each Hvac_plant_item_termination is connected to exactly one Hvac_plant_item_connection. Each Hvac_plant_item_connection is associated with exactly one Hvac_plant_item_termination.

4.3.56. Hvac_section_branch_termination to Hvac_branch_connection

Each Hvac_section_branch_termination branches from zero, one or many Hvac_branch_connection objects. Each Hvac_branch_connection is associated with exactly one Hvac_section_branch_termination.

4.3.57. Hvac_section_segment to Hvac_branch_connection

Each Hvac_section_segment is connected to zero, one or many Hvac_branch_connection objects. Each Hvac_branch_connection is associated with exactly one Hvac_section_segment.

4.3.58. Hvac_section_segment to Hvac_plant_item_branch_connection

Each Hvac_section_segment is connected to zero, one or many Hvac_plant_item_branch_connection objects. Each Hvac_plant_item_branch_connection is associated with exactly one Hvac_section_segment.

4.3.59. Hvac_section_segment to Hvac_section_segment_insulation

Each Hvac_section_segment has zero, one or many Hvac_section_segment_insulation objects. Each Hvac_section_segment_insulation is associated with exactly one Hvac_section_segment.

4.3.60. Hvac_section_segment to Hvac_section_segment_termination

Each Hvac_section_segment is terminated by exactly two Hvac_section_segment_termination objects. Each Hvac_section_segment_termination is associated with exactly one Hvac_section_segment.

4.3.61. Hvac_section_segment to Hvac_section_termination

Each Hvac_section_segment is started or ended by zero, one, or two Hvac_section_termination objects. Each Hvac_section_termination is associated with exactly one Hvac_section_segment.

© ISO 2001 — All rights reserved

4.3.62. Hvac_section_segment to Stream_design_case

Each Hvac_section_segment transports material for zero, one or many Stream_design_case objects. Each Stream_design_case defines potential material for zero, one or many Hvac_section_segment objects.

4.3.63. Hvac_section_to_section_connection to Hvac_section_to_section_termination

Each Hvac_section_to_section_connection connects zero, one or many Hvac_section_to_section_termination objects. Each Hvac_section_to_section_termination is associated with zero or one Hvac_section_to_section_connection objects.

4.3.64. Hvac_specification to Hvac_section_segment

Each Hvac_specification specifies components for zero, one or many Hvac_section_segment objects. Each Hvac_section_segment has components specified by exactly one Hvac_specification object.

4.3.65. Hvac_system_section to Hvac_section_segment

Each Hvac_system_section has at least one Hvac_section_segment object. Each Hvac_section_segment is associated with exactly one Hvac_system_section.

4.3.66. Inspection_condition to Connection_inspection_record

Each Inspection_condition is specified under zero, one or many Connection_inspection_record objects. Each Connection_inspection_record defines the environment for zero, one or many Inspection_condition objects.

4.3.67. Inspection_condition to Piping_component_inspection_record

Each Inspection_condition is specified under zero, one or many Piping_component_inspection_record objects. Each Piping_component_inspection_record defines the environment for zero, one or many Inspection_condition objects.

4.3.68. Line_branch_connection to Changed_line_branch_connection

Each Line_branch_connection is changed by zero, one, or many Changed_line_branch_connection objects. Each Changed_line_branch_connection changes exactly one Line_branch_connection.

 © ISO 2001 — All rights reserved

4.3.69. Line_branch_termination to Line_branch_connection

Each Line_branch_termination is branched from exactly one Line_branch_connection object. Each Line_branch_connection branches to exactly one Line_branch_termination object.

4.3.70. Line_less_piping_system to Piping_system_component

Each Line_less_piping_system is composed of zero, one or many Piping_system_component objects. Each Piping_system_component is a component of zero, one or many Line_less_piping_system objects.

4.3.71. Line_less_piping_system to Stream_design_case

Each Line_less_piping_system transports material for zero, one, or many Stream_design_case objects. Each Stream_design_case defines potential material for zero, one, or many Line_less_piping_system objects.

4.3.72. Line_piping_system_component_assignment to Changed_line_assignment

Each Line_piping_system_component_assignment is changed by zero, one, or many Changed_line_assignment objects. Each Changed_line_assignment changes exactly one Line_piping_system_component_assignment.

4.3.73. Line_plant_item_branch_connection to Changed_line_plant_item_branch_connection

Each Line_plant_item_branch_connection is changed by zero, one, or many Changed_line_plant_item_branch_connection objects. Each Changed_line_plant_item_branch_connection changes exactly one Line_plant_item_branch_connection.

4.3.74. Line_plant_item_branch_connector to Line_plant_item_branch_connection

Each Line_plant_item_branch_connector is connected to zero or one Line_plant_item_branch_connection object. Each Line_plant_item_branch_connection connects exactly one Line_plant_item_branch_connector object.

4.3.75. Line_plant_item_connection to Changed_line_plant_item_connection

Each Line_plant_item_connection is changed by zero, one, or many Changed_line_plant_item_connection objects. Each Changed_line_plant_item_connection changes exactly one Line_plant_item_connection.

4.3.76. Line_plant_item_connector to Line_plant_item_connection

© ISO 2001 — All rights reserved

Each Line_plant_item_connector is connected to zero or one Line_plant_item_connection object. Each Line_plant_item_connection connects exactly one Line_plant_item_connector object.

4.3.77. Line_plant_item_termination to Line_plant_item_connection

Each Line_plant_item_termination is connected to exactly one Line_plant_item_connection object. Each Line_plant_item_connection connects exactly one Line_plant_item_termination object.

4.3.78. Line_to_line_connection to Changed_line_to_line_connection

Each Line_to_line_connection is changed by zero, one or many Changed_lineto_line_connection objects. Each Changed_line_to_line_connection changes exactly one Line_to_line_connection object.

4.3.79. Line_to_line_connection to Line_to_line_termination

Each Line_to_line_connection connects two or more Line_to_line_termination objects. Each Line_to_line_termination is connected by exactly one Line_to_line_connection object.

4.3.80. Material_specification_selection to Material_specification_subset_reference

Each Material_specification_selection is used by zero, one or many Material_specification_subset_reference objects. Each Material_specification_subset_reference uses exactly one Material_specification_selection object.

4.3.81. Node to Piping_system

Each Node contains zero, one or many Piping_system objects. Each Piping_system defines branch point for zero, one or many Node objects.

4.3.82. Physical_connector to Functional_connector_occurrence_satisfaction

Each Physical_connector satisfies requirements for zero, one or many Functional_connector_occurrence_satisfaction objects. Each Functional_connector_occurrence_satisfaction has requirements satisfied by exactly one Physical_connector object.

4.3.83. Physical_design_view to Functional_plant_item_satisfaction

Each Physical_design_view satisfies requirements for zero, one or many Functional_plant_item_satisfaction objects. Each Functional_plant_item_satisfaction has requirements satisfied by exactly one Physical_design_view object.

 © ISO 2001 — All rights reserved

4.3.84. Physical_design_view to Installed_physical_design_view

Each Physical_design_view is used as zero or one Installed_physical_design_view object. Each Installed_physical_design_view is exactly one Physical_design_view object.

4.3.85. Piping_assembly to Piping_assembly_assignment

Each Piping_assembly is in zero, one or many Piping_assembly_assignment objects. Each piping_assembly_assignment assembles exactly one Piping_assembly.

4.3.86. Piping_component to Family_definition

Each Piping_component defines zero or one Family_definition object. Each Family_definition is defined by zero or one Piping_component object.

4.3.87. Piping_component to Piping_component_inspection_record

Each Piping_component has zero, one or many Piping_component_inspection_record objects. Each Piping_component_inspection_record belongs to exactly one Piping_component object.

4.3.88. Piping_component_inspection_record to Document

Each Piping_component_inspection_record has inspection information defined by zero, one or many Document objects. Each Document defines inspection information for zero, one or many Piping_component_inspection_record objects.

4.3.89. Piping_connector to Piping_connector_service_characteristic

Each Piping_connector provides zero or one Piping_connector_service_characteristic object. Each Piping_connector_service_characteristic is provided by exactly one Piping_connector object.

4.3.90. Piping_connector to Piping_size_description

Each Piping_connector has a size described by zero, one or many Piping_size_description objects. Each Piping_size_description describes the size of zero, one or many Piping_connector objects.

4.3.91. Piping_connector_service_characteristic to Service_operating_case

Each Piping_connector_service_characteristic supports zero, one or many Service_operating_case objects. Each Service_operating_case is supported by exactly one Piping_connector_service_characteristic object.

4.3.92. Piping_specification to Changed_piping_specification

© ISO 2001 — All rights reserved

Each Piping_specification is changed by zero, one, or many Changed_piping_specification objects. Each Changed_piping_specification changes exactly one Piping_specification.

4.3.93. Piping_specification to Family_definition

Each Piping_specification is composed of one or more Family_definition objects. Each Family_definition is part of exactly one Piping_specification object.

4.3.94. Piping_specification to Piping_system_line_segment

Each Piping_specification specifies components for zero, one or many Piping_system_line_segment objects. Each Piping_system_line_segment has components specified by exactly one Piping_specification object.

4.3.95. Piping_spool to Piping_spool_inspection_record

Each Piping_spool has zero, one or many Piping_spool_inspection_record objects. Each Piping_spool_inspection_record is part of exactly one Piping_spool object.

4.3.96. Piping_spool to Shape_inspection_record

Each Piping_spool has zero, one or many Shape_inspection_record objects. Each Shape_inspection_record is part of zero or one Piping_spool object.

4.3.97. Piping_spool_inspection_record to Inspection_condition

Each Piping_spool_inspection_record is specified under zero, one or many Inspection_condition objects. Each Inspection_condition defines the environment for zero, one or many Piping_spool_inspection_record objects.

4.3.98. Piping_system to Piping_system_line

Each Piping_system is made up of zero, one or many Piping_system_line objects. Each Piping_system_line is part of exactly one Piping_system object.

4.3.99. Piping_system_component to Equipment_trim_piping

Each Piping_system_component is used as zero, one or many Equipment_trim_piping objects. Each Equipment_trim_piping is exactly one Piping_system_component object.

4.3.100. Piping_system_component to Line_piping_system_component_assignment

Each Piping_system_component satisfies zero, one or many Line_piping_system_component_assignment objects. Each Line_piping_system_component_assignment is satisfied by exactly one Piping_system_component object.

 © ISO 2001 — All rights reserved

4.3.101. Piping_system_component to Piping_size_description

Each Piping_system_component has a size described by zero, one or many Piping_size_description objects. Each Piping_size_description describes the size of zero, one or many Piping_system_component objects.

4.3.102. Piping_system_line to Changed_piping_system_line

Each Piping_system_line is changed by zero, one, or many Changed_piping_system_line objects. Each Changed_piping_system_line changes exactly one Piping_system_line.

4.3.103. Piping_system_line to Piping_system_line_segment

Each Piping_system_line is composed of one or more Piping_system_line_segment objects. Each Piping_system_line_segment is a component of exactly one Piping_system_line object.

4.3.104. Piping_system_line to Piping_system_line_termination

Each Piping_system_line is start or ended by zero, one or two Piping_system_line_termination objects. Each Piping_system_line_termination starts or ends exactly one Piping_system_line object.

4.3.105. Piping_system_line_segment to Changed_piping_system_line_segment

Each Piping_system_line_segment is changed by zero, one, or many Changed_piping_system_line_segment objects. Each Changed_piping_system_line_segment changes exactly one Piping_system_line_segment.

4.3.106. Piping_system_line_segment to Line_branch_connection

Each Piping_system_line_segment has branches defined by zero, one or many Line_branch_connection objects. Each Line_branch_connection defines the branches of exactly one Piping_system_line_segment object.

4.3.107. Piping_system_line_segment to Line_plant_item_branch_connection

Each Piping_system_line_segment is connected to zero, one, or many Line_plant_item_branch_connection objects. Each Line_plant_item_branch_connection defines the branches of exactly one Piping_system_line_segment.

4.3.108. Piping_system_line_segment to Line_piping_system_component_assignment

Each Piping_system_line_segment defines the need for zero, one or many Line_piping_system_component_assignment objects. Each Line_piping_system_component_assignment satisfies the need defined by exactly one Piping_system_line_segment object.

© ISO 2001 — All rights reserved

4.3.109. Piping_system_line_segment to Piping_system_line_segment_termination

Each Piping_system_line_segment is terminated by exactly two Piping_system_line_segment_termination objects; one is termination_1 and the other is termination_2. Each Piping_system_line_segment_termination terminates exactly one Piping_system_line_segment object.

4.3.110. Piping_system_line_segment to Segment_insulation

Each Piping_system_line_segment requires zero, one or many Segment_insulation objects. Each Segment_insulation is required by exactly one Piping_system_line_segment object.

4.3.111. Piping_system_line_segment to Stream_design_case

Each Piping_system_line_segment defines transport needs for zero, one, or many Stream_design_case objects. Each Stream_design_case defines potential material for zero, one, or many Piping_system_line_segment objects.

4.3.112. Piping_system_line_segment_termination to Changed_piping_system_line_segment_termination

Each Piping_system_line_segment_termination is changed by zero, one, or many Changed_piping_system_line_segment_termination objects. Each Changed_piping_system_line_segment_termination changes exactly one Piping_system_line_segment_termination.

4.3.113. Planned_physical_plant to Changed_planned_physical_plant

Each Planned_physical_plant is changed by zero, one, or many Changed_planned_physical_plant objects. Each Changed_planned_physical_plant changes exactly one Planned_physical_plant.

4.3.114. Planned_physical_plant to Functional_plant_satisfaction

Each Planned_physical_plant satisfies requirements for zero, one or many Functional_plant_satisfaction objects. Each Functional_plant_satisfaction has requirements satisfied by exactly one Planned_physical_plant object.

4.3.115. Planned_physical_plant to Location_in_plant

Each Planned_physical_plant contains zero, one or many Location_in_plant objects. Each Location_in_plant is located in zero, one or many Planned_physical_plant objects.

4.3.116. Planned_physical_plant to Sited_plant

Each Planned_physical_plant is used as zero or one Sited_plant object. Each Sited_plant is exactly one Planned_physical_plant object.

 © ISO 2001 — All rights reserved

4.3.117. Planned_physical_plant_item to Piping_assembly_assignment

Each Planned_physical_plant_item is assigned by zero or one Piping_assembly_assignment object. Each Piping_assembly_assignment assigns exactly one Planned_physical_plant_item object.

4.3.118. Planned_physical_plant_item to Plant_item_connector_occurrence

Each Planned_physical_plant_item has zero, one or many Plant_item_connector_occurrence objects. Each Plant_item_connector_occurrence is part of exactly one Planned_physical_plant_item object.

4.3.119. Planned_physical_plant_item to Support_usage

Each Planned_physical_plant_item is supported by zero, one or many Support_usage objects. Each Support_usage identifies exactly one Planned_physical_plant_item object that supports another.

Each Planned_physical_plant_item supports zero, one or many Support_usage objects. Each Support_usage identifies exactly one Planned_physical_plant_item object that is supported.

4.3.120. Plant to Changed_plant

Each Plant is changed by zero, one, or many Changed_plant objects. Each Changed_plant changes exactly one Plant.

4.3.121. Plant to External_classification

Each Plant is classified by zero, one or many External_classification objects. Each External_classification classifies zero, one or many Plant objects.

4.3.122. Plant to Functional_plant

Each Plant is used as zero or one Functional_plant object. Each Functional_plant is exactly one Plant object.

4.3.123. Plant to Planned_physical_plant

Each Plant is realized as zero, one or many Planned_physical_plant objects. Each Planned_physical_plant is the realization of exactly one Plant object.

4.3.124. Plant to Plant_process_capability

Each Plant produces zero, one or many Plant_process_capability objects. Each Plant_process_capability is produced by exactly one Plant object.

© ISO 2001 — All rights reserved

4.3.125. Plant to Sub_plant_relationship

Each Plant contains zero, one or many Sub_plant_relationship objects. Each Sub_plant_relationship is contained in exactly one Plant object.

Each Plant is used in zero, one or many Sub_plant_relationship objects. Each Sub-plant_relationship uses exactly one Plant object.

4.3.126. Plant_item to Changed_plant_item

Each Plant_item is changed by zero, one, or many Changed_plant_item objects. Each Changed_plant_item changes exactly one Plant_item.

4.3.127. Plant_item to Document

Each Plant_item has reference of zero, one or many Document objects. Each Document is reference for zero, one or many Plant_item objects.

4.3.128. Plant_item to External_classification

Each Plant_item is classified by zero, one or many External_classification objects. Each External_classification classifies zero, one or many Plant_item objects.

4.3.129. Plant_item to Insulation

Each Plant_item is insulated by zero, one or many Insulation objects. Each Insulation insulates zero or one Plant_item object.

4.3.130. Plant_item to Plant_item_collection

Each Plant_item is a group of zero, one, or many Plant_item_collection objects. Each Plant_item_collection identifies as a group exactly one Plant_item object.

Each Plant_item is an element in zero, one or many Plant_item_collection objects. Each Plant_item_collection identifies as an element of a collection exactly one Plant_item object.

4.3.131. Plant_item to Plant_item_design_view

Each Plant_item is defined as one or more Plant_item_design_view objects. Each Plant_item_design_view defines exactly one Plant_item object.

4.3.132. Plant_item to Plant_item_shape

Each Plant_item is spatially described by zero or one Plant_item_shape object. Each Plant_item_shape spatially describes exactly one Plant_item object.

 © ISO 2001 — All rights reserved

4.3.133. Plant_item to Plant_item_weight

Each Plant_item is measured as having zero, one or many Plant_item_weight objects. Each Plant_item_weight is the measured weight of exactly one Plant_item object.

4.3.134. Plant_item to Reference_geometry

Each Plant_item references zero, one or many Reference_geometry objects. Each Reference_geometry is referenced by zero, one or many Plant_item objects.

4.3.135. Plant_item to Required_material_description

Each Plant_item satisfies zero, one or many Required_material_description objects. Each Required_material_description is satisfied by zero, one or many Plant_item objects.

4.3.136. Plant_item to Spare_plant_item_usage

Each Plant_item is the primary plant item in zero, one or many Spare_plant_item_usage objects. Each Spare_plant_item_usage has as a primary plant item exactly one Plant_item object.

Each Plant_item is the spare plant item in zero, one or many Spare_plant_item_usage objects. Each Spare_plant_item_usage has as a spare plant item exactly one Plant_item object.

4.3.137. Plant_item to User_defined_attribute_value

Each Plant_item is characterized by zero, one or many User_defined_attribute_value objects. Each User_defined_attribute_value characterizes exactly one Plant_item object.

4.3.138. Plant_item_collection to Changed_plant_item_collection

Each Plant_item_collection is changed by zero, one, or many Changed_plant_item_collection objects. Each Changed_plant_item_collection changes exactly one Plant_item_collection.

4.3.139. Plant_item_connection to Changed_plant_item_connection

Each Plant_item_connection is changed by zero, one, or many Changed_plant_item_connection objects. Each Changed_plant_item_connection changes exactly one Plant_item_connection.

4.3.140. Plant_item_connection to Connection_inspection_record

Each Plant_item_connection has zero, one or many Connection_inspection_record objects. Each Connection_inspection_record is part of exactly one Plant_item_connection object.

4.3.141. Plant_item_connection to Connection_material

Each Plant_item_connection uses one or more Connection_material objects. Each Connection_material is used by exactly one Plant_item_connection object.

© ISO 2001 — All rights reserved

4.3.142. Plant_item_connection_occurrence to Functional_connection_occurrence_satisfaction

Each Plant_item_connection_occurrence is the functional requirements for zero, one or many Functional_connection_occurrence_satisfaction objects. Each Functional_connection_occurrence_satisfaction gets the functional requirements from exactly one Plant_item_connection_occurrence object.

Each Plant_item_connection_occurrence satisfies the requirements for zero, one or many Functional_connection_occurrence_satisfaction objects. Each Functional_connection_occurrence_satisfaction has requirements satisfied by exactly one Plant_item_connection_occurrence object.

4.3.143. Plant_item_connection_occurrence to Plant_item_connector_occurrence

Each Plant_item_connection_occurrence connects two or more Plant_item_connector_occurrence objects. Each Plant_item_connector_occurrence is connected by zero or one Plant_item_connection_occurrence object.

4.3.144. Plant_item_connector to Changed_plant_item_connector

Each Plant_item_connector is changed by zero, one, or many Changed_plant_item_connector objects. Each Changed_plant_item_connector changes exactly one Plant_item_connector.

4.3.145. Plant_item_connector to Document

Each Plant_item_connector has reference of zero, one or many Document objects. Each Document is reference for zero, one or many Plant_item_connector objects.

4.3.146. Plant_item_connector to External_classification

Each Plant_item_connector is classified by zero, one or many External_classification objects. Each External_classification classifies zero, one or many Plant_item_connector objects.

4.3.147. Plant_item_connector to Piping_component_inspection_record

Each Plant_item_connector has zero, one or many Piping_component_inspection_record objects. Each Piping_component_inspection_record is part of exactly one Plant_item_connector object.

4.3.148. Plant_item_connector to Required_material_description

Each Plant_item_connector has material requirements defined by zero, one or many Required_material_description objects. Each Required_material_description defines material requirements for zero, one or many Plant_item_connector objects.

 © ISO 2001 — All rights reserved

4.3.149. Plant_item_connector to Shape_representation

Each Plant_item_connector has shape defined by zero, one or many Shape_representation objects. Each Shape_representation defines the shape of zero, one or many Plant_item_connector objects.

4.3.150. Plant_item_definition to Catalogue_item

Each Plant_item_definition is used as zero, one or many Catalogue_item objects. Each Catalogue_item is zero or one Dlant_item_definition object.

4.3.151. Plant_item_definition to Connector_definition

Each Plant_item_definition has one or more Connector_definition objects. Each Connector_definition is part of zero or one Plant_item_definition object.

4.3.152. Plant_item_definition to Planned_physical_plant_item

Each Plant_item_definition defines zero, one or many Planned_physical_plant_item objects. Each Planned_physical_plant_item is defined by zero or one Plant_item_definition object.

4.3.153. Plant_item_instance to Plant_item_interference

Each Plant_item_instance is the first item in zero, one or many Plant_item_interference objects. Each Plant_item_interference has as its first item exactly one Plant_item_instance object.

Each Plant_item_instance is the second item in zero, one or many Plant_item_interference objects. Each Plant_item_interference has as its second item exactly one Plant_item_instance object.

4.3.154. Plant_item_instance to Plant_item_location

Each Plant_item_instance is located by zero or one Plant_item_location object. Each Plant_item_location locates exactly one Plant_item_instance object. A Plant_item_instance shall be located only once in either a plant, site, or building or multiple times with respect to other Plant_item objects. A Plant_item_instance shall not be located more than once in a plant, site, or building.

4.3.155. Plant_item_instance to Project_design_assignment

Each Plant_item_instance is assigned by zero, one or many Project_design_assignment objects. Each Project_design_assignment assigns exactly one Plant_item_instance object.

4.3.156. Plant_item_instance to Relative_item_location

Each Plant_item_instance is the referenced item for zero, one or many Relative_item_location objects. Each Relative_item_location references exactly one Plant_item_instance object.

© ISO 2001 — All rights reserved

4.3.157. Plant_item_interference to Interfering_shape_element

Each Plant_item_interference has intersecting geometry of zero, one or many Interfering_shape_element objects. Each Interfering_shape_element is the intersecting geometry for exactly one Plant_item_interference object.

4.3.158. Plant_item_interference to Plant_item_interference_status

Each Plant_item_interference has a status of one or more Plant_item_interference_status objects. Each Plant_item_interference_status provides the status for exactly one Plant_item_interference object.

4.3.159. Plant_item_interference to Shape_interference_zone_usage

Each Plant_item_interference has a zone of interference defined by zero, one or many Shape_interference_zone_usage objects. Each Shape_interference_zone_usage defines the zone of interference for exactly one Plant_item_interference object.

4.3.160. Plant_item_location to Changed_plant_item_location

Each Plant_item_location is changed by zero, one, or many Changed_plant_item_location objects. Each Changed_plant_item_location changes exactly one Plant_item_location.

4.3.161. Plant_item_shape to Changed_plant_item_shape

Each Plant_item_shape is changed by zero, one, or many Changed_plant_item_shape objects. Each Changed_plant_item_shape changes exactly one Plant_item_shape.

4.3.162. Plant_item_shape to Shape_representation

Each Plant_item_shape is defined using zero, one or many Shape_representation objects. Each Shape_representation defines exactly one Plant_item_shape object.

4.3.163. Plant_process_capability to Changed_plant_process_capability

Each Plant_process_capability is changed by zero, one, or many Changed_plant_process_capability objects. Each Changed_plant_process_capability changes exactly one Plant_process_capability.

4.3.164. Plant_system to Changed_plant_system

Each Plant_system is changed by zero, one, or many Changed_plant_system objects. Each Changed_plant_system changes exactly one Plant_system.

4.3.165. Plant_system to External_classification

 © ISO 2001 — All rights reserved

Each Plant_system is classified by zero, one or many External_classification objects. Each External_classification classifies zero, one or many Plant_system objects.

4.3.166. Plant_system to Plant_item

Each Plant_system is composed of zero, one or many Plant_item objects. Each Plant_item is part of zero, one or many Plant_system objects.

4.3.167. Plant_system to Plant_system_assembly

Each Plant_system is the super-system in zero, one or many Plant_system_assembly objects. Each Plant_system_assembly has exactly one Plant_system object as the super-system.

Each Plant_system is the sub-system in zero, one or many Plant_system_assembly objects. Each Plant_system_assembly has exactly one Plant_system object as the sub-system.

4.3.168. Point_and_line_representation to Survey_point

Each Point_and_line_representation is defined by zero, one or many Survey_point objects. Each Survey_point defines zero, one or many Point_and_line_representation objects.

4.3.169. Raceway to Raceway_lane

Each Raceway contains zero, one or many Raceway_lane objects. Each Raceway_lane is contained in exactly one Raceway object.

4.3.170. Reference_geometry to Changed_reference_geometry

Each Reference_geometry is changed by zero, one, or many Changed_reference_geometry objects. Each Changed_reference_geometry changes exactly one Reference_geometry.

4.3.171. Reference_geometry to Shape_representation_element

Each Reference_geometry is described by zero, one or many Shape_representation_element objects. Each Shape_representation_element provides description of zero, one or many Reference_geometry objects.

4.3.172. Required_material_description to Changed_required_material_description

Each Required_material_description is changed by zero, one, or many Changed_required_material_description objects. Each Changed_required_material_description changes exactly one Required_material_description.

4.3.173. Required_material_description to Material_specification_selection

© ISO 2001 — All rights reserved

Each Required_material_description is satisfied by zero, one or many Material_specification_selection objects. Each Material_specification_selection satisfies zero, one or many Required_material_description objects.

4.3.174. Route to Node

Each Route consists of one or more Node objects. Each Node is associated with exactly one Route.

4.3.175. Route to Piping_system_line_segment

Each Route is composed of zero, one or many Piping_system_line_segment objects. Each Piping_system_line_segment is a component of zero or one Route object.

4.3.176. Shape_inspection_record to Plant_item_connector

Each Shape_inspection_record has inspected shape defined by zero, one or many Plant_item_connector objects. Each Plant_item_connector defines inspected shape of zero, one or many Shape_inspection_record objects.

4.3.177. Shape_representation to Shape_representation_element_usage

Each Shape_representation is defined by one or more Shape_representation_element_usage objects. Each Shape_representation_element_usage defines exactly one Shape_representation object.

4.3.178. Shape_representation_element to Shape_interference_zone_usage

Each Shape_representation_element defines a volume for zero or one Shape_interference_zone_usage object. Each Shape_interference_zone_usage has a volume defined by exactly one Shape_representation_element object.

4.3.179. Shape_representation_element to Shape_representation_element_usage

Each Shape_representation_element provides a definition for zero or one Shape_representation_element_usage object. Each Shape_representation_element_usage has a definition provided by exactly one Shape_representation_element object.

4.3.180. Shape_representation_element_usage to Interfering_shape_element

Each Shape_representation_element_usage is the intersecting geometry of zero, one or many Interfering_shape_element objects. Each Interfering_shape_element uses as intersecting geometry exactly one Shape_representation_element_usage object.

 © ISO 2001 — All rights reserved

4.3.181. Site to Building

Each Site has located on it zero, one or many Building objects. Each Building is located on exactly one Site object.

4.3.182. Site to Changed_site

Each Site is changed by zero, one, or many Changed_site objects. Each Changed_site changes exactly one Site.

4.3.183. Site to Location_in_site

Each Site is a reference frame for zero, one or many Location_in_site objects. Each Location_in_site has a reference frame provided by exactly one Site object.

4.3.184. Site to Site_feature

Each Site contains zero, one or many Site_feature objects. Each Site_feature is contained in exactly one Site object.

4.3.185. Site to Site_shape_representation

Each Site has shape defined by zero, one or many Site_shape_representation objects. Each Site_shape_representation defines the shape of exactly one Site object.

4.3.186. Site to Sited_plant

Each Site has located on it one or more Sited_plant objects. Each Sited_plant is located on exactly one Site object.

4.3.187. Site_feature to Changed_site_feature

Each Site_feature is changed by zero, one, or many Changed_site_feature objects. Each Changed_site_feature changes exactly one Site_feature.

4.3.188. Site_shape_representation to Breakline

Each Site_shape_representation is constrained by zero, one or many Breakline objects. Each Breakline constrains zero or one Site_shape_representation object.

4.3.189. Site_shape_representation to Gis_position

Each Site_shape_representation has a global position defined by zero or one Gis_position. Each Gis_position defines the global position for exactly one Site_shape_representation object.

4.3.190. Sited_plant to Changed_sited_plant

Each Sited_plant is changed by zero, one, or many Changed_sited_plant objects. Each Changed_sited_plant changes exactly one Sited_plant.

© ISO 2001 — All rights reserved

4.3.191. Stream_design_case to Line_less_piping_system

Each Stream_design_case transports material for zero, one or many Line_less_piping_system objects. Each Line_less_piping_system is associated with zero, one or many Stream_design_case objects.

4.3.192. Stream_design_case to Piping_system_line_segment

Each Stream_design_case defines transport needs for zero, one or many Piping_system_line_segment objects. Each Piping_system_line_segment defines potential material for zero, one or many Stream_design_case objects.

4.3.193. Stream_design_case to Service_operating_case

Each Stream_design_case defines zero, one or many Service_operating_case objects. Each Service_operating_case is defined by exactly one Stream_design_case object.

4.3.194. Stream_design_case to Stream_phase

Each Stream_design_case is composed of one or more Stream_phase objects. Each Stream_phase is defined by exactly one Stream_design_case object.

4.3.195. Sub_plant_relationship to Changed_sub_plant_relationship

Each Sub_plant_relationship is changed by zero, one or many Changed_sub_plant_relationship objects. Each Changed_sub_plant_relationship changes exactly one Sub_plant_relationship.

4.3.196. Supplier to Catalogue_definition

Each Supplier publishes zero, one or many Catalogue_definition objects. Each Catalogue_definition is published by zero or one Supplier object.

4.3.197. Supplier to Supplied_equipment

Each Supplier supplies one or more Supplied_equipment objects. Each Supplied_equipment is supplied by exactly one Supplier object.

4.3.198. Support_constraints to Support_usage

Each Support_constraints constrains the motion in the negative x-direction of zero, one or many Support_usage objects. Each Support_usage has motion in the negative x-direction constrained by zero or one Support_constraints object.

Each Support_constraints constrains the motion in the positive x-direction of zero, one or many Support_usage objects. Each Support_usage has motion in the positive x-direction constrained by zero or one Support_constraints object.

 © ISO 2001 — All rights reserved

Each Support_constraints constrains the motion in the negative y-direction of zero, one or many Support_usage objects. Each Support_usage has motion in the negative y-direction constrained by zero or one Support_constraints object.

Each Support_constraints constrains the motion in the positive y-direction of zero, one or many Support_usage objects. Each Support_usage has motion in the positive y-direction constrained by zero or one Support_constraints object.

Each Support_constraints constrains the motion in the negative z-direction of zero, one or many Support_usage objects. Each Support_usage has motion in the negative z-direction constrained by zero or one Support_constraints object.

Each Support_constraints constrains the motion in the positive z-direction of zero, one or many Support_usage objects. Each Support_usage has motion in the positive z-direction constrained by zero or one Support_constraints object.

Each Support_constraints constrains the negative rotation about the x-axis of zero, one or many Support_usage objects. Each Support_usage has the negative rotation about the x-axis constrained by zero or one Support_constraints object.

Each Support_constraints constrains the positive rotation about the x-axis of zero, one or many Support_usage objects. Each Support_usage has the positive rotation about the x-axis constrained by zero or one Support_constraints object.

Each Support_constraints constrains the negative rotation about the y-axis of zero, one or many Support_usage objects. Each Support_usage has the negative rotation about the y-axis constrained by zero or one Support_constraints object.

Each Support_constraints constrains the positive rotation about the y-axis of zero, one or many Support_usage objects. Each Support_usage has the positive rotation about the y-axis constrained by zero or one Support_constraints object.

Each Support_constraints constrains the negative rotation about the z-axis of zero, one or many Support_usage objects. Each Support_usage has the negative rotation about the z-axis constrained by zero or one Support_constraints object.

Each Support_constraints constrains the positive rotation about the z-axis of zero, one or many Support_usage objects. Each Support_usage has the positive rotation about the z-axis constrained by zero or one Support_constraints object.

4.3.199. Support_usage_connection to Plant_item_connection_occurrence

Each Support_usage_connection is detailed by zero, one or many. Plant_item_connection_occurrence objects. Each Plant_item_connection_occurrence gives the details for zero or one Support_usage_connection object.

© ISO 2001 — All rights reserved

5 Application interpreted model

5.1 Mapping specification

This clause contains the mapping specification that shows how each UoF, application object, and attribute of this part of ISO 10303 (see clause 4) maps to one or more AIM constructs (see annex A). The mapping specification contains up to five items for each application object or attribute. These include: Application element; AIM element; Source; Rules; and Reference path.

Application element: Name of an application element as it appears in the application object definition in clause 4.2. Application object names begin with an upper case letter. Attribute names and assertions are listed after the application object to which they belong and are written in lower case.

AIM element: Name of an AIM element as it appears in the AIM (see annex A), the term 'IDENTICAL MAPPING', or the term 'PATH'. AIM entities are written in lower case. Attribute names of AIM entities are referred to as <entity name>.<attribute name>. The mapping of an application element may result in several related AIM elements. Each of these AIM elements requires an entry of its own in the specification. The term 'IDENTICAL MAPPING' indicates that both application objects of an application assertion map to the same AIM element. The term 'PATH' indicates that the application assertion maps to the entire reference path.

Source: For those AIM elements that are interpreted from the integrated resources, this is the number of the corresponding part of ISO 10303. For those AIM elements that are created for the purpose of this part of ISO 10303, this is the number of the part. For those AIM elements that are directly incorporated from an application interpreted construct (AIC), this is the AIC reference.

Rules: One or more numbers may be given that refer to rules that apply to the current AIM element or reference path. For rules that are derived from relationships between application objects, the same rule is referred to by the mapping entries of all the involved AIM elements. The expanded names of the rules are listed in the specification.

Reference path: To describe fully the mapping of an application object, it may be necessary to specify a reference path through several related AIM elements. The reference path documents the role of an AIM element relative to the AIM element in the row succeeding it. Two or mores such related AIM elements define the interpretation of the integrated resources that satisfies the requirement specified by the application object. For each AIM element that has been created for use within this part of ISO 10303, a reference path up to its supertype from an integrated resource is specified.

For the expression of reference paths and the relationships between AIM elements the following notational conventions apply:

a) []: multiple AIM elements or sections of the reference path are required to satisfy an information requirement;

b) (): multiple AIM elements or sections of the reference path are identified as alternatives within the mapping to satisfy an information requirement;

c) {}: enclosed section constrains the reference path to satisfy an informational requirement;

d) ->: attribute references the entity or select type given in the following entry;

e) <-: entity or select type is referenced by the attribute in the following entry;

© ISO 2001 – All rights reserved

f) [i]: attribute is an aggregation of which a single member is given in the following entry;

g) [n]: attribute is an aggregation of which member n is given in the following entry;

h) =>: entity is a supertype of the entity given in the following entry;

i) <=: entity is a subtype of the entity given in the following entry;

j) =: the string, select, or enumeration type is constrained to a choice or vlaue;

k) \: line continuation for strings that wrap.

© ISO 2001 – All rights reserved

5.1.1 Cableway_component_characterization UoF

5.1.1.1 Cable

AIM element: product

Source: 41

Rules: dependent_instantiable_product_context
product_context_discipline_type_constraint
value_for_application_context

Reference path: {[product
classification_item = product
classification_item <-
applied_classification_assignment.items[i]
applied_classification_assignment <=
classification_assignment
classification_assignment.assigned_classification ->
[group
group.name = 'cable']
[group <-
group_relationship.related_group
group_relationship
group_relationship.relating_group ->
group
group.name = 'electrical component']
[product
product.frame_of_reference[i] ->
product_context<=
application_context_element
application_context_element.name = 'plant item']}

5.1.1.2 Cableway_component

AIM element: product

Source: 41

Rules: dependent_instantiable_product_context
product_context_discipline_type_constraint
value_for_application_context

Reference path: {[product
classification_item = product
classification_item <-
applied_classification_assignment.items[i]
applied_classification_assignment <=
classification_assignment

© ISO 2001 – All rights reserved

classification_assignment.assigned_classification ->
group
group.name = 'cableway component']
[product
product.frame_of_reference[i] ->
product_context <=
application_context_element
application_context_element.name = 'plant item']}

5.1.1.2.1 cableway_component to cable

AIM element: PATH

Reference path: product <-
product_definition_formation.of_product
product_definition_formation <-
product_definition.formation
product_definition <-
product_definition_relationship.relating_product_definition
product_definition_relationship
{product_definition_relationship.name = 'cable containment'}
product_definition_relationship.related_product_definition ->
product_definition
product_definition.formation ->
product_definition_formation
product_definition_formation.of_product ->
product

5.1.1.3 Cableway_connector

AIM element: plant_item_connector

Source: 227

Reference path: plant_item_connector <=
shape_aspect
{plant_item_connector
classification_item = plant_item_connector
classification_item <-
applied_classification_assignment.items[i]
applied_classification_assignment <=
{classification_assignment
classification_assignment.role ->
classification_role
classification_role.name = 'cableway connector type classification'}
classification_assignment
classification_assignment.assigned_classification ->
group =>
cableway_connector_class}

5.1.1.3.1 type

© ISO 2001 – All rights reserved

AIM element: group.name

Source: 41

Reference path: plant_item_connector
classification_item = plant_item_connector
classification_item <-
applied_classification_assignment.items[i]
applied_classification_assignment <=
{classification_assignment
classification_assignment.role ->
classification_role
classification_role.name = 'cableway connector type classification'}
classification_assignment
classification_assignment.assigned_classification ->
{group =>
cableway_connector_class}
group
group.name

5.1.1.4 Cableway_fitting

AIM element: cableway_component_definition

Source: 227

Rules: dependent_instantiable_product_context
product_context_discipline_type_constraint
value_for_application_context

Reference path: cableway_component_definition <=
product_definition
{cableway_component_definition
classification_item = cableway_component_definition
classification_item <-
applied_classification_assignment.items[i]
applied_classification_assignment <=
classification_assignment
classification_assignment.assigned_classification ->
group
group.name = 'cableway fitting'}
{product_definition
product_definition.formation ->
product_definition_formation
product_definition_formation.of_product ->
[product
classification_item = product
classification_item <-
applied_classification_assignment.items[i]
applied_classification_assignment <=
classification_assignment
classification_assignment.assigned_classification ->
(group)

© ISO 2001 – All rights reserved

(group <-
group_relationship.related_group
group_relationship
group_relationship.relating_group ->
group)
group.name = 'cableway component']
[product
product.frame_of_reference[i] ->
product_context <=
application_context_element
application_context_element.name = 'plant item']})

5.1.1.5 Cableway_piece

AIM element: cableway_component_definition

Source: 227

Rules: dependent_instantiable_product_context
product_context_discipline_type_constraint
value_for_application_context

Reference path: cableway_component_definition <=
product_definition
{cableway_component_definition
classification_item = cableway_component_definition
classification_item <-
applied_classification_assignment.items[i]
applied_classification_assignment <=
classification_assignment
classification_assignment.assigned_classification ->
group
group.name = 'cableway piece'}
{product_definition
product_definition.formation ->
product_definition_formation
product_definition_formation.of_product ->
[product
classification_item = product
classification_item <-
applied_classification_assignment.items[i]
applied_classification_assignment <=
classification_assignment
classification_assignment.assigned_classification ->
(group)
(group <-
group_relationship.related_group
group_relationship
group_relationship.relating_group ->
group)
group.name = 'cableway component']
[product
product.frame_of_reference[i] ->

© ISO 2001 – All rights reserved

product_context <=
application_context_element
application_context_element.name = 'plant item']})

5.1.1.6 Cableway_size_description

AIM element: representation

Source: 43

Reference path: {representation
(representation.name = 'cableway size description')
(representation.name = 'conduit size description')
(representation.name = 'raceway size description')}

5.1.1.6.1 fill_area

AIM element: [measure_with_unit.value_component]
[measure_with_unit.unit_component]

Source: 41

Reference path representation
(representation.items[i] ->
{representation_item
(representation_item.name = 'maximum fill area')
(representation_item.name = 'minimum fill area')})
([representation.items[i] ->
{representation_item
representation_item.name = 'maximum fill area'}]
[representation.items[i] ->
{representation_item
representation_item.name = 'minimum fill area'}]))
(representation.items[i] ->
representation_item =>
{representation_item.name = 'fill area'})
measure_representation_item <=
{measure_with_unit =>
area_measure_with_unit}
measure_with_unit
[measure_with_unit.value_component]
[measure_with_unit.unit_component]

5.1.1.6.2 cableway_size_description to cableway_component

AIM element: PATH

Reference path: representation <-
property_definition_representation.using_representation
property_definition_representation
property_definition_representation.definition ->
represented_definition
represented_definition = property_definition

© ISO 2001 – All rights reserved

property_definition.definition ->
characterized_definition
characterized_definition = characterized_product_definition
characterized_product_definition
characterized_product_definition = product_definition
product_definition
{product_definition =>
cableway_component_definition}
product_definition.formation ->
product_definition_formation
product_definition_formation.of_product ->
product

5.1.1.6.3 cableway_size_description to cableway_connector

AIM element: PATH

Reference path: representation <-
property_definition_representation.using_representation
property_definition_representation
property_definition_representation.definition ->
represented_definition
represented_definition = property_definition
property_definition.definition ->
characterized_definition
characterized_definition = shape_definition
shape_definition
shape_definition = shape_aspect
shape_aspect =>
plant_item_connector

5.1.1.7 Conduit

AIM element: cableway_component_definition

Source: 227

Rules: dependent_instantiable_product_context
product_context_discipline_type_constraint
value_for_application_context

Reference path: cableway_component_definition <=
product_definition
{cableway_component_definition
classification_item = cableway_component_definition
classification_item <-
applied_classification_assignment.items[i]
applied_classification_assignment <=
classification_assignment
classification_assignment.assigned_classification ->
[group =>
cableway_component_class]

© ISO 2001 – All rights reserved

[group
group.name = 'conduit']}
{product_definition
product_definition.formation ->
product_definition_formation
product_definition_formation.of_product ->
[product
classification_item = product
classification_item <-
applied_classification_assignment.items[i]
applied_classification_assignment <=
classification_assignment
classification_assignment.assigned_classification ->
(group)
(group <-
group_relationship.related_group
group_relationship
group_relationship.relating_group ->
group)
group.name = 'cableway component']
[product
product.frame_of_reference[i] ->
product_context <=
application_context_element
application_context_element.name = 'plant item']})

5.1.1.8 Conduit_size_description

AIM element: representation

Source: 43

Reference path: {representation
representation.name = 'conduit size description'}

5.1.1.8.1 outer_diameter

AIM element: [measure_with_unit.value_component]
[measure_with_unit.unit_component]

Source: 41

Reference path representation
(representation.items[i] ->
{representation_item
(representation_item.name = 'maximum outer diameter')
(representation_item.name = 'minimum outer diameter')})
([representation.items[i] ->
{representation_item
representation_item.name = 'maximum outer diameter'}]
[representation.items[i] ->
{representation_item
representation_item.name = 'minimum outer diameter'}]))

© ISO 2001 – All rights reserved

(representation.items[i] ->
representation_item =>
{representation_item.name = 'outer diameter'})
measure_representation_item <=
{measure_with_unit =>
length_measure_with_unit}
measure_with_unit
[measure_with_unit.value_component]
[measure_with_unit.unit_component]

5.1.1.8.2 inner_diameter

AIM element: [measure_with_unit.value_component]
[measure_with_unit.unit_component]

Source: 41

Reference path representation
(representation.items[i] ->
{representation_item
(representation_item.name = 'maximum inner diameter')
(representation_item.name = 'minimum inner diameter')})
([representation.items[i] ->
{representation_item
representation_item.name = 'maximum inner diameter'}]
[representation.items[i] ->
{representation_item
representation_item.name = 'minimum inner diameter'}]))
(representation.items[i] ->
representation_item =>
{representation_item.name = 'inner diameter'})
measure_representation_item <=
{measure_with_unit =>
length_measure_with_unit}
measure_with_unit
[measure_with_unit.value_component]
[measure_with_unit.unit_component]

5.1.1.8.3 thickness

AIM element: [measure_with_unit.value_component]
[measure_with_unit.unit_component]

Source: 41

Reference path representation
(representation.items[i] ->
{representation_item
(representation_item.name = 'maximum thickness')
(representation_item.name = 'minimum thickness')})
([representation.items[i] ->
{representation_item
representation_item.name = 'maximum thickness'}]

© ISO 2001 – All rights reserved

[representation.items[i] ->
{representation_item
representation_item.name = 'minimum thickness'}]))
(representation.items[i] ->
representation_item =>
{representation_item.name = 'thickness'})
measure_representation_item <=
{measure_with_unit =>
length_measure_with_unit}
measure_with_unit
[measure_with_unit.value_component]
[measure_with_unit.unit_component]

5.1.1.9 Raceway

AIM element: cableway_component_definition

Source: 227

Rules: dependent_instantiable_product_context
product_context_discipline_type_constraint
value_for_application_context

Reference path: cableway_component_definition <=
product_definition
{cableway_component_definition
classification_item = cableway_component_definition
classification_item <-
applied_classification_assignment.items[i]
applied_classification_assignment <=
classification_assignment
classification_assignment.assigned_classification ->
[group =>
cableway_component_class]
[group
group.name = 'raceway']}
{product_definition
product_definition.formation ->
product_definition_formation
product_definition_formation.of_product ->
[product
classification_item = product
classification_item <-
applied_classification_assignment.items[i]
applied_classification_assignment <=
classification_assignment
classification_assignment.assigned_classification ->
(group)
(group <-
group_relationship.related_group
group_relationship
group_relationship.relating_group ->
group)

© ISO 2001 – All rights reserved

group.name = 'cableway component']
[product
product.frame_of_reference[i] ->
product_context <=
application_context_element
application_context_element.name = 'plant item']})

5.1.1.9.1 raceway to raceway_lane

AIM element: PATH

Reference path: cableway_component_definition <=
product_definition <-
product_definition_relationship.relating_product_definition
product_definition_relationship
product_definition_relationship.related_product_definition ->
product_definition =>
cableway_component_definition

5.1.1.10 Raceway_lane

AIM element: cableway_component_definition

Source: 227

Rules: dependent_instantiable_product_context
product_context_discipline_type_constraint
value_for_application_context

Reference path: cableway_component_definition <=
product_definition
{cableway_component_definition
classification_item = cableway_component_definition
classification_item <-
applied_classification_assignment.items[i]
applied_classification_assignment <=
classification_assignment
classification_assignment.assigned_classification ->
[group =>
cableway_component_class]
[group
group.name = 'raceway lane']}
{product_definition
product_definition.formation ->
product_definition_formation
product_definition_formation.of_product ->
[product
classification_item = product
classification_item <-
applied_classification_assignment.items[i]
applied_classification_assignment <=
classification_assignment

© ISO 2001 – All rights reserved

classification_assignment.assigned_classification ->
(group)
(group <-
group_relationship.related_group
group_relationship
group_relationship.relating_group ->
group)
group.name = 'cableway component']
[product
product.frame_of_reference[i] ->
product_context <=
application_context_element
application_context_element.name = 'plant item']})

5.1.1.11 Raceway_size_description

AIM element: representation

Source: 43

Reference path: {representation
representation.name = 'raceway size description'}

5.1.1.11.1 outer_width

AIM element: [measure_with_unit.value_component]
[measure_with_unit.unit_component]

Source: 41

Reference path representation
(representation.items[i] ->
{representation_item
(representation_item.name = 'maximum outer width')
(representation_item.name = 'minimum outer width')})
([representation.items[i] ->
{representation_item
representation_item.name = 'maximum outer width'}]
[representation.items[i] ->
{representation_item
representation_item.name = 'minimum outer width'}]))
(representation.items[i] ->
representation_item =>
{representation_item.name = 'outer width'})
measure_representation_item <=
{measure_with_unit =>
length_measure_with_unit}
measure_with_unit
[measure_with_unit.value_component]
[measure_with_unit.unit_component]

© ISO 2001 – All rights reserved

5.1.1.11.2 outer_height

AIM element: [measure_with_unit.value_component]
[measure_with_unit.unit_component]

Source: 41

Reference path representation
(representation.items[i] ->
{representation_item
(representation_item.name = 'maximum outer height')
(representation_item.name = 'minimum outer height')})
([representation.items[i] ->
{representation_item
representation_item.name = 'maximum outer height'}]
[representation.items[i] ->
{representation_item
representation_item.name = 'minimum outer height'}]))
(representation.items[i] ->
representation_item =>
{representation_item.name = 'outer height'})
measure_representation_item <=
{measure_with_unit =>
length_measure_with_unit}
measure_with_unit
[measure_with_unit.value_component]
[measure_with_unit.unit_component]

5.1.1.11.3 inner_width

AIM element: [measure_with_unit.value_component]
[measure_with_unit.unit_component]

Source: 41

Reference path representation
(representation.items[i] ->
{representation_item
(representation_item.name = 'maximum inner width')
(representation_item.name = 'minimum inner width')})
([representation.items[i] ->
{representation_item
representation_item.name = 'maximum inner width'}]
[representation.items[i] ->
{representation_item
representation_item.name = 'minimum inner width'}]))
(representation.items[i] ->
representation_item =>
{representation_item.name = 'inner width'})
measure_representation_item <=
{measure_with_unit =>
length_measure_with_unit}
measure_with_unit

© ISO 2001 – All rights reserved

[measure_with_unit.value_component]
[measure_with_unit.unit_component]

5.1.1.11.4 inner_height

AIM element: [measure_with_unit.value_component]
[measure_with_unit.unit_component]

Source: 41

Reference path representation
(representation.items[i] ->
{representation_item
(representation_item.name = 'maximum inner height')
(representation_item.name = 'minimum inner height')})
([representation.items[i] ->
{representation_item
representation_item.name = 'maximum inner height'}]
[representation.items[i] ->
{representation_item
representation_item.name = 'minimum inner height'}]))
(representation.items[i] ->
representation_item =>
{representation_item.name = 'inner height'})
measure_representation_item <=
{measure_with_unit =>
length_measure_with_unit}
measure_with_unit
[measure_with_unit.value_component]
[measure_with_unit.unit_component]

5.1.2 Change_Information UoF

5.1.2.1 Change

AIM element: change_action

Source: 227

Reference path: change_action <=
directed_action

5.1.2.1.1 business_unit

AIM element: organization.name

Source: 41

Reference path: change_action
plant_spatial_configuration_organization_item = change_action
plant_spatial_configuration_organization_item <-
plant_spatial_configuration_organization_assignment.items[i]

© ISO 2001 – All rights reserved

plant_spatial_configuration_organization_assignment <=
organization_assignment
organization_assignment.assigned_organization ->
organization
organization.name

5.1.2.1.2 change_id

AIM element: action.name

Source: 41

Reference path: change_action <=
directed_action <=
executed_action <=
action
action.name

5.1.2.1.3 change_reason

AIM element: action_method.purpose

Source: 41

Reference path: change_action <=
directed_action <=
executed_action <=
action
action.chosen_method ->
action_method
action_method.purpose

5.1.2.1.4 change_summary

AIM element: action_method.description

Source: 41

Reference path: change_action <=
directed_action <=
executed_action <=
action
action.chosen_method ->
action_method
action_method.description

5.1.2.1.5 date

AIM element: (calendar_date)
([calendar_date]
[local_time])

© ISO 2001 – All rights reserved

Source: 41

Rules: change_action_requires_date

Reference path: change_action
(dated_item = change_action
dated_item <-
applied_date_assignment.items[i]
applied_date_assignment <=
date_assignment
date_assignment.assigned_date ->
date =>
calendar_date)
(date_and_time_item = change_action
date_and_time_item <-
applied_date_and_time_assignment.items[i]
applied_date_and_time_asssignment
applied_date_and_time_assignment.assigned_date_and_time ->
date_and_time
[date_and_time.date_component ->
date =>
calendar_date]
[date_and_time.time_component ->
local_time])

5.1.2.1.6 project_number

AIM element: organizational_project.name

Source: 41

Reference path: change_action
plant_spatial_configuration_organization_item = change_action
plant_spatial_configuration_organization_item <-
plant_spatial_configuration_organization_assignment.items[i]
plant_spatial_configuration_organization_assignment <=
organization_assignment
organization_assignment.assigned_organization ->
organization <-
organizational_project.responsible_organizations[i]
organizational_project
organizational_project.name

5.1.2.1.7 revision

AIM element: action_relationship

Source: 41

Reference path: change_action <=
directed_action <=
executed_action <=
action <-

© ISO 2001 – All rights reserved

(action_relationship.relating_action)
(action_relationship.related_action)
{action_relationship
action_relationship.name = 'change revision'}
action_relationship

5.1.2.1.8 title

AIM element: action_method.name

Source: 41

Reference path: change_action <=
directed_action <=
executed_action <=
action
action.chosen_method ->
action_method
action_method.name

5.1.2.1.9 change to change_item

AIM element: PATH

Reference path: change_action <=
directed_action <=
executed_action <=
action <-
action_assignment.assigned_action
action_assignment =>
plant_spatial_configuration_change_assignment
plant_spatial_configuration_change_assignment.items[i] ->
change_item

5.1.2.1.10 change to change_life_cycle_stage_usage

AIM element: PATH

Rules: version2_p41_object_role_selection

Reference path: change_action <=
directed_action
directed_action.directive ->
action_directive
action_directive.requests[i] ->
versioned_action_request

5.1.2.2 Change_approval

AIM element: applied_approval_assignment

© ISO 2001 – All rights reserved

Source: 227

Rules: change_life_cycle_stage_usage_requires_approval

Reference path: applied_approval_assignment <=
approval_assignment

5.1.2.2.1 approval_date

AIM element: (calendar_date)
([calendar_date]
[local_time])

Source: 41

Rules: approval_requires_approval_date_time

Reference path: applied_approval_assignment <=
approval_assignment
approval_assignment.assigned_approval ->
approval <-
approval_date_time.dated_approval
approval_date_time
approval_date_time.date_time ->
date_time_select
(date_time_select = date
date =>
calendar_date)
(date_time_select = date_and_time
date_and_time
[date_and_time.date_component ->
date =>
calendar_date]
[date_and_time.time_component ->
local_time])

5.1.2.2.2 approver

AIM element: person

Source: 41

Rules: approval_requires_approval_person_organization

Reference path: applied_approval_assignment <=
approval_assignment
approval_assignment.assigned_approval ->
approval <-
approval_person_organization.authorized_approval
approval_person_organization
approval_person_organization.person_organization ->
person_organization_select
(person_organization_select = person)

© ISO 2001 – All rights reserved

(person_organization_select = person_and_organization
person_and_organization
person_and_organization.the_person ->
person)
person

5.1.2.2.3 approver_role

AIM element: approval_role.role

Source: 41

Rules: approval_requires_approval_person_organization

Reference path: applied_approval_assignment <=
approval_assignment
approval_assignment.assigned_approval ->
approval <-
approval_person_organization.authorized_approval
approval_person_organization
approval_person_organization.role ->
approval_role
approval_role.role

5.1.2.3 Change_item

AIM element: change_item

Source: 227

Reference path: {change_item
(change_item = line_branch_connection)
(change_item = line_plant_item_branch_connection)
(change_item = line_plant_item_connection)
(change_item = line_termination_connection)
(change_item = plant)
(change_item = axis2_placement_2d)
(change_item = axis2_placement_3d)
(change_item = product)
(change_item = product_definition_relationship)
(change_item = reference_geometry)
(change_item = electrical_system)
(change_item = externally_defined_plant_item_definition)
(change_item = ducting_system)
(change_item = instrumentation_and_control_system)
(change_item = piping_system)
(change_item = plant_item_connection)
(change_item = plant_item_connector)
(change_item = plant_line_definition)
(change_item = plant_line_segment_definition)
(change_item = plant_line_segment_termination)
(change_item = process_capability)
(change_item = product_definition)

© ISO 2001 – All rights reserved

(change_item = product_definition_shape)
(change_item = sited_plant)
(change_item = structural_system)
(change_item = document)
(change_item = site)
(change_item = site_feature)
(change_item = cableway_system)}

5.1.2.3.1 change_item_id

AIM element: change_item_id_assignment

Source: 227

Rules: change_item_requires_id

Reference path: change_item <-
change_item_id_assignment.items[i]
change_item_id_assignment <=
name_assignment

5.1.2.3.2 creation_date

AIM element: (calendar_date)

([calendar_date]
[local_time])

Source: 41

Rules: change_item_requires_creation_date

Reference path: change_item
(dated_item = change_item
dated_item <-
applied_date_assignment.items[i]
applied_date_assignment <=
{date_assignment
date_assignment.role ->
date_role
date_role.name = 'creation date'}
date_assignment
date_assignment.assigned_date ->
date =>
calendar_date)
(date_and_time_item = change_item
date_and_time_item <-
applied_date_and_time_assignment.items[i]
applied_date_and_time_assignment <=
{date_and_time_assignment
date_and_time_assignment.role ->
date_time_role
date_time_role.name = 'creation date'}

© ISO 2001 – All rights reserved

date_and_time_asssignment
date_and_time_assignment.assigned_date_and_time ->
date_and_time
[date_and_time.date_component ->
date =>
calendar_date]
[date_and_time.time_component ->
local_time])

5.1.2.3.3 description

AIM element: action.description

Source: 41

Reference path: change_item <-
plant_spatial_configuration_change_assignment.items[i]
plant_spatial_configuration_change_assignment <=
action_assignment
action_assignment.assigned_action ->
action
action.description

5.1.2.3.4 item_owner

AIM element: person_and_organization

Source: 41

Reference path: change_item
plant_spatial_configuration_person_and_organization_item = change_item
plant_spatial_configuration_person_and_organization_item <-
plant_spatial_configuration_person_and_organization_assignment.items[i]
plant_spatial_configuration_person_and_organization_assignment <=
{person_and_organization_assignment
person_and_organization_assignment.role ->
person_and_organization_role
person_and_organization_role.name = 'owner'}
person_and_organization_assignment
person_and_organization_assignment.assigned_person_and_organization ->
person_and_organization

5.1.2.3.5 from_or_to

AIM element: object_role.name

Source: 41

Rules: version2_p41_object_role_selection

Reference path: change_item <-
plant_spatial_configuration_change_assignment.items[i]
plant_spatial_configuration_change_assignment <=

© ISO 2001 – All rights reserved

action_assignment
role_select = action_assignment
role_select <-
role_association.item_with_role
role_association
role_association.role ->
object_role
object_role.name
{(object_role.name = 'from')
(object_role.name = 'to')}

5.1.2.3.6 supersedence_status

AIM element: action_status.status

Source: 41

Reference path: change_item <-
plant_spatial_configuration_change_assignment.items[i]
plant_spatial_configuration_change_assignment <=
action_assignment
action_assignment.assigned_action ->
action =>
executed_action <-
action_status.assigned_action
action_status
action_status.status

5.1.2.4 Change_life_cycle_stage

AIM element: group

Source: 41

5.1.2.4.1 name

AIM element: group.name

Source: 41

5.1.2.4.2 change_life_cycle_stage to change_life_cycle_stage_sequence (as predecessor)

AIM element: PATH

Reference path: group <-
group_relationship.relating_group
{group_relationship
group_relationship.name = 'change life cycle stage sequence'}
group_relationship

© ISO 2001 – All rights reserved

5.1.2.4.3 change_life_cycle_stage to change_life_cycle_stage_sequence (as successor)

AIM element: PATH

Reference path: group <-
group_relationship.related_group
{group_relationship
group_relationship.name = 'change life cycle stage sequence'}
group_relationship

5.1.2.4.4 change_life_cycle_stage to change_life_cycle_stage_usage

AIM element: PATH

Rules: change_life_cycle_stage_usage_requires_stage

Reference path: group <-
group_assignment.assigned_group
group_assignment =>
change_life_cycle_stage_assignment

5.1.2.5 Change_life_cycle_stage_sequence

AIM element: group_relationship

Source: 41

Reference path: {group_relationship
group_relationship.name = 'change life cycle stage sequence'}

5.1.2.6 Change_life_cycle_stage_usage

AIM element: change_life_cycle_stage_assignment

Source: 227

Reference path: change_life_cycle_stage_assignment <=
group_assignment

5.1.2.6.1 date_of_activation

AIM element: (calendar_date)
([calendar_date]
[local_time])

Source: 41

Reference path: change_life_cycle_stage_assignment
(dated_item = change_life_cycle_stage_assignment
dated_item <-
applied_date_assignment.items[i]

© ISO 2001 – All rights reserved

applied_date_assignment <=
{date_assignment
date_assignment.role ->
date_role
date_role.name = 'activation date'}
date_assignment
date_assignment.assigned_date ->
date =>
calendar_date)
(date_and_time_item = change_life_cycle_stage_assignment
date_and_time_item <-
applied_date_and_time_assignment.items[i]
applied_date_and_time_assignment <=
{date_and_time_assignment
date_and_time_assignment.role ->
date_time_role
date_time_role.name = 'activation date'}
date_and_time_asssignment
date_and_time_assignment.assigned_date_and_time ->
date_and_time
[date_and_time.date_component ->
date =>
calendar_date]
[date_and_time.time_component ->
local_time])

5.1.2.6.2 date_of_completion

AIM element: (calendar_date)
([calendar_date]
[local_time])

Source: 41

Reference path: change_life_cycle_stage_assignment
(dated_item = change_life_cycle_stage_assignment
dated_item <-
applied_date_assignment.items[i]
applied_date_assignment <=
{date_assignment
date_assignment.role ->
date_role
date_role.name = 'completion date'}
date_assignment
date_assignment.assigned_date ->
date =>
calendar_date)
(date_and_time_item = change_life_cycle_stage_assignment
date_and_time_item <-
applied_date_and_time_assignment.items[i]
applied_date_and_time_assignment <=
{date_and_time_assignment
date_and_time_assignment.role ->
date_time_role

© ISO 2001 – All rights reserved

date_time_role.name = 'completion date'}
date_and_time_asssignment
date_and_time_assignment.assigned_date_and_time ->
date_and_time
[date_and_time.date_component ->
date =>
calendar_date]
[date_and_time.time_component ->
local_time])

5.1.2.6.3 description

AIM element: group.description

Source: 41

Reference path: change_life_cycle_stage_assignment <=
group_assignment
group_assignment.assigned_group ->
group
group.description

5.1.2.6.4 change_life_cycle_stage_usage to change_approval

AIM element: PATH

Rules: change_life_cycle_stage_usage_requires_approval

Reference path: change_life_cycle_stage_assignment
change_life_cycle_stage_assignment.items[i] ->
change_life_cycle_stage_item
change_life_stage_item = action_directive
action_directive <-
directed_action.directive
directed_action =>
change_action
approval_item = change_action
approval_item <-
applied_approval_assignment.items[i]
applied_approval_assignment

5.1.2.7 Changed_line_assignment

AIM element: product_definition_relationship

Source: 41

Reference path: {product_definition_relationship
change_item = product_definition_relationship}

5.1.2.8 Changed_line_branch_connection

© ISO 2001 – All rights reserved

AIM element: line_branch_connection

Source: 227

Reference path: line_branch_connection <=
shape_aspect_relationship
{line_branch_connection
change_item = line_branch_connection}

5.1.2.9 Changed_line_plant_item_branch_connection

AIM element: line_plant_item_branch_connection

Source: 227

Reference path: line_plant_item_branch_connection <=
shape_aspect_relationship
{line_plant_item_branch_connection
change_item = line_plant_item_branch_connection}

5.1.2.10 Changed_line_plant_item_connection

AIM element: line_plant_item_connection

Source: 227

Reference path: line_plant_item_connection <=
shape_aspect_relationship
{line_plant_item_connection
change_item = line_plant_item_connection}

5.1.2.11 Changed_line_to_line_connection

AIM element: line_termination_connection

Source: 227

Reference path: line_termination_connection <=
shape_aspect_relationship
{line_termination_connection
change_item = line_termination_connection}

5.1.2.12 Changed_piping_specification

AIM element: document

Source: 41

Reference path: {document
[document.kind ->
document_type
document_type.product_data_type = 'piping specification']

© ISO 2001 – All rights reserved

[change_item = document]}

5.1.2.13 Changed_piping_system_line

AIM element: plant_line_definition

Source: 227

Reference path: plant_line_definition <=
product_definition_with_associated_documents
{plant_line_definition
change_item = plant_line_definition}

5.1.2.14 Changed_piping_system_line_segment

AIM element: plant_line_segment_definition

Source: 227

Reference path: plant_line_segment_definition <=
product_definition
{plant_line_segment_definition
change_item = plant_line_segment_definition}

5.1.2.15 Changed_piping_system_line_segment_termination

AIM element: plant_line_segment_termination

Source: 227

Reference path: plant_line_segment_termination <=
shape_aspect
{plant_line_segment_termination
change_item = plant_line_segment_termination}

5.1.2.16 Changed_planned_physical_plant

AIM element: product_definition

Source: 41

Reference path: {product_definition
[product_definition.formation ->
product_definition_formation
product_definition_formation.of_product ->
product =>
plant]
[product_definition.frame_of_reference ->
product_definition_context <=
application_context_element
application_context_element.name = 'physical occurrence']

© ISO 2001 – All rights reserved

[change_item = product_definition]}

5.1.2.17 Changed_plant

AIM element: plant

Source: 227

Reference path: plant <=
product
{plant
change_item = plant}

5.1.2.18 Changed_plant_item

AIM element: (product_definition)
(externally_defined_plant_item_definition)
(product)

Source: 41

Rules: dependent_instantiable_product_context
product_context_discipline_type_constraint
value_for_application_context

Reference path: ({[product_definition
change_item = product_definition]
[product_definition
product_definition.formation ->
product_definition_formation
product_definition_formation.of_product ->
product
product.frame_of_reference[i] ->
product_context<=
application_context_element
application_context_element.name = 'plant item']})
(externally_defined_plant_item_definition <=
[product_definition]
[externally_defined_item]
{[externally_defined_plant_item_definition
change_item = externally_defined_plant_item_definition]
[externally_defined_plant_item_definition <=
product_definition
product_definition.formation ->
product_definition_formation
product_definition_formation.of_product ->
product
product.frame_of_reference[i] ->
product_context<=
application_context_element
application_context_element.name = 'plant item']})
({[product

© ISO 2001 – All rights reserved

change_item = product]
[product
product.frame_of_reference[i] ->
product_context<=
application_context_element
application_context_element.name = 'plant item']})

5.1.2.19 Changed_plant_item_collection

AIM element: product_definition_relationship

Source: 41

Reference path: {product_definition_relationship
change_item = product_definition_relationship}

5.1.2.20 Changed_plant_item_connection

AIM element: plant_item_connection

Source: 227

Reference path: plant_item_connection <=
[shape_aspect_relationship]
[shape_aspect]
{plant_item_connection
change_item = plant_item_connection}

5.1.2.21 Changed_plant_item_connector

AIM element: plant_item_connector

Source: 227

Reference path: plant_item_connector <=
shape_aspect
{plant_item_connector
change_item = plant_item_connector}

5.1.2.22 Changed_plant_item_location

AIM element: (axis2_placement_2d)
(axis2_placement_3d)

Source: 42

Reference path: {(axis2_placement_2d
change_item = axis2_placement_2d)
(axis2_placement_3d
change_item = axis2_placement_3d)}

© ISO 2001 – All rights reserved

5.1.2.23 Changed_plant_item_shape

AIM element: product_definition_shape

Source: 41

Reference path: {product_definition_shape
change_item = product_definition_shape}

5.1.2.24 Changed_plant_process_capability

AIM element: process_capability

Source: 227

Reference path: process_capability <=
property_definition
{process_capability
change_item = process_capability}

5.1.2.25 Changed_plant_system

AIM element: (electrical_system)
(ducting_system)
(instrumentation_and_control_system)
(piping_system)
(structural_system)
(cableway_system)

Source: 227

Rules: dependent_instantiable_product_context
product_context_discipline_type_constraint
value_for_application_context

Reference path: (electrical_system <=)
(ducting_system <=)
(instrumentation_and_control_system <=)
(piping_system <=)
(structural_system <=)
(cableway_system <=)
product_definition
{product_definition
product_definition.formation ->
product_definition_formation
product_definition_formation.of_product ->
product
product.frame_of_reference[i] ->
product_context<=
application_context_element
application_context_element.name = 'plant system'}
{(electrical_system

© ISO 2001 – All rights reserved

change_item = electrical_system)
(ducting_system
change_item = ducting_system)
(instrumentation_and_control_system
change_item = instrumentation_and_control_system)
(piping_system
change_item = piping_system)
(structural_system
change_item = structural_system)
(cableway_system
change_item = cableway_system)}

5.1.2.26 Changed_reference_geometry

AIM element: reference_geometry

Source: 227

Reference path: reference_geometry <=
derived_shape_aspect
{reference_geometry
change_item = reference_geometry}

5.1.2.27 Changed_required_material_description

AIM element: product_definition

Source: 41

Reference path: {product_definition
change_item = product_definition}

5.1.2.28 Changed_site

AIM element: site

Source: 227

Reference path: site <=
[characterized_object]
[property_definition]
{site
change_item = site}

5.1.2.29 Changed_site_feature

AIM element: site_feature

Source: 227

Reference path: site_feature <=
property_definition

© ISO 2001 – All rights reserved

{site_feature
change_item = site_feature}

5.1.2.30 Changed_sited_plant

AIM element: sited_plant

Source: 227

Reference path: sited_plant <=
property_definition
{sited_plant
change_item = sited_plant}

5.1.2.31 Changed_sub_plant_relationship

AIM element: product_definition_relationship

Source: 41

Reference path: {product_definition_relationship
change_item = product_definition_relationship}

5.1.3 Connection UoF

5.1.3.1 Connection_definition

AIM element: plant_item_connection

Source: 227

Reference path: plant_item_connection <=
[shape_aspect_relationship]
[shape_aspect]
{shape_aspect
shape_aspect.of_shape ->
product_definition_shape <=
property_definition
property_definition.definition ->
characterized_definition
characterized_definition = characterized_product_definition
characterized_product_definition
characterized_product_definition = product_definition
product_definition
product_definition.frame_of_reference ->
product_definition_context <=
application_context_element
(application_context_element.name = 'functional definition')
(application_context_element.name = 'physical definition')}

© ISO 2001 – All rights reserved

5.1.3.1.1 connection_definition to connector_definition

AIM element: PATH

Reference path:
(plant_item_connection <=
shape_aspect_relationship
[shape_aspect_relationship.relating_shape_aspect ->]
[shape_aspect_relationship.related_shape_aspect ->]
shape_aspect =>
plant_item_connector)
([plant_item_connection <=
shape_aspect_relationship
[shape_aspect_relationship.relating_shape_aspect ->]
[shape_aspect_relationship.related_shape_aspect ->]
shape_aspect =>
plant_item_connector]
[plant_item_connection <=
shape_aspect <-
shape_aspect_relationship.relating_shape_aspect
{shape_aspect_relationship.name = 'connection involvement'}
shape_aspect_relationship
shape_aspect_relationship.related_shape_aspect ->
shape_aspect =>
plant_item_connector])

5.1.3.1.2 connection_definition to functional_connection_definition_-satisfaction (as functional requirements)

AIM element: PATH

Reference path:
plant_item_connection <=
{shape_aspect
shape_aspect.of_shape ->
product_definition_shape <=
property_definition
property_definition.definition ->
characterized_definition
characterized_definition = characterized_product_definition
characterized_product_definition
characterized_product_definition = product_definition
product_definition
product_definition.frame_of_reference ->
product_definition_context <=
application_context_element
application_context_element.name = 'functional definition'}
shape_aspect <-
shape_aspect_relationship.relating_shape_aspect
shape_aspect_relationship
{shape_aspect_relationship
shape_aspect_relationship.name = 'connection definition satisfaction'}

© ISO 2001 – All rights reserved

5.1.3.1.3 connection_definition to functional_connection_definition_-satisfaction (as requirements)

AIM element: PATH satisfaction)

Reference path:
plant_item_connection <=
{shape_aspect
shape_aspect.of_shape ->
product_definition_shape <=
property_definition
property_definition.definition ->
characterized_definition
characterized_definition = characterized_product_definition
characterized_product_definition
characterized_product_definition = product_definition
product_definition
product_definition.frame_of_reference ->
product_definition_context <=
application_context_element
application_context_element.name = 'physical definition'}
shape_aspect <-
shape_aspect_relationship.related_shape_aspect
shape_aspect_relationship
{shape_aspect_relationship
shape_aspect_relationship.name = 'connection definition satisfaction'}

5.1.3.1.4 connection_definition to plant_item_connection_occurrence

AIM element: PATH

Reference path:
plant_item_connection <=
shape_aspect <-
shape_aspect_relationship.relating_shape_aspect
{shape_aspect_relationship
shape_aspect_relationship.name = 'usage'}
shape_aspect_relationship
shape_aspect_relationship.related_shape_aspect ->
{shape_aspect
shape_aspect.of_shape ->
product_definition_shape <=
property_definition
property_definition.definition ->
characterized_definition
characterized_definition = characterized_product_definition
characterized_product_definition
characterized_product_definition = product_definition
product_definition
product_definition.frame_of_reference ->
product_definition_context <=
application_context_element
(application_context_element.name = 'functional occurrence')
(application_context_element.name = 'physical occurrence')}
shape_aspect =>

© ISO 2001 – All rights reserved

plant_item_connection

5.1.3.2 Electricity_transference

AIM element: plant_item_connection

Source: 227

Reference path: plant_item_connection <=
[shape_aspect_relationship]
[shape_aspect]
{plant_item_connection
classification_item = plant_item_connection
classification_item <-
applied_classification_assignment.items[i]
applied_classification_assignment <=
classification_assignment
classification_assignment.assigned_classification ->
[group =>
connection_functional_class]
[group
group.name = 'electricity transference']}

5.1.3.3 Flexible_connection

AIM element: plant_item_connection

Source: 227

Reference path: plant_item_connection <=
[shape_aspect_relationship]
[shape_aspect]
{plant_item_connection
classification_item = plant_item_connection
classification_item <-
applied_classification_assignment.items[i]
applied_classification_assignment <=
classification_assignment
classification_assignment.assigned_classification ->
[group =>
connection_motion_class]
[group
group.name = 'flexible']}

5.1.3.4 Fluid_transference

AIM element: plant_item_connection

Source: 227

Reference path: plant_item_connection <=
[shape_aspect_relationship]
[shape_aspect]

© ISO 2001 – All rights reserved

{plant_item_connection
classification_item = plant_item_connection
classification_item <-
applied_classification_assignment.items[i]
applied_classification_assignment <=
classification_assignment
classification_assignment.assigned_classification ->
[group =>
connection_functional_class]
[group
group.name = 'fluid transference']}

5.1.3.5 Functional_connection_definition_satisfaction

AIM element: shape_aspect_relationship

Source: 41

Reference path: {shape_aspect_relationship
[shape_aspect_relationship.name = 'connection definition satisfaction']
[[shape_aspect_relationship.relating_shape_aspect ->]
[shape_aspect_relationship.related_shape_aspect ->]
{shape_aspect
shape_aspect.of_shape ->
product_definition_shape <=
property_definition
property_definition.definition ->
characterized_definition
characterized_definition = characterized_product_definition
characterized_product_definition
characterized_product_definition = product_definition
product_definition
product_definition.frame_of_reference ->
product_definition_context <=
application_context_element
(application_context_element.name = 'functional definition')
(application_context_element.name = 'physical definition')}
shape_aspect =>
plant_item_connection]}

5.1.3.6 Functional_connection_occurrence_satisfaction

AIM element: shape_aspect_relationship

Source: 41

Reference path: {shape_aspect_relationship
[shape_aspect_relationship.name = 'connection occurrence satisfaction']
[[shape_aspect_relationship.relating_shape_aspect ->]
[shape_aspect_relationship.related_shape_aspect ->]
{shape_aspect
shape_aspect.of_shape ->
product_definition_shape <=

© ISO 2001 – All rights reserved

property_definition
property_definition.definition ->
characterized_definition
characterized_definition = characterized_product_definition
characterized_product_definition
characterized_product_definition = product_definition
product_definition
product_definition.frame_of_reference ->
product_definition_context <=
application_context_element
(application_context_element.name = 'functional occurrence')
(application_context_element.name = 'physical occurrence')}
shape_aspect =>
plant_item_connection]}

5.1.3.7 Load_transference

AIM element: plant_item_connection

Source: 227

Reference path: plant_item_connection <=
[shape_aspect_relationship]
[shape_aspect]
{plant_item_connection
classification_item = plant_item_connection
classification_item <-
applied_classification_assignment.items[i]
applied_classification_assignment <=
classification_assignment
classification_assignment.assigned_classification ->
[group =>
connection_functional_class]
[group
group.name = 'load transference']}

5.1.3.8 Locked_orientation_connection

AIM element: plant_item_connection

Source: 227

Reference path: plant_item_connection <=
[shape_aspect_relationship]
[shape_aspect]
{plant_item_connection
classification_item = plant_item_connection
classification_item <-
applied_classification_assignment.items[i]
applied_classification_assignment <=
classification_assignment
classification_assignment.assigned_classification ->
[group =>

© ISO 2001 – All rights reserved

connection_motion_class]
[group
group.name = 'locked orientation']}

5.1.3.9 Plant_item_connection

AIM element: plant_item_connection

Source: 227

Reference path: plant_item_connection <=
[shape_aspect_relationship]
[shape_aspect]
{plant_item_connection
classification_item = plant_item_connection
classification_item <-
applied_classification_assignment.items[i]
applied_classification_assignment <=
classification_assignment
classification_assignment.assigned_classification ->
[group =>
connection_motion_class]
[group
(group.name = 'flexible')
(group.name = 'locked orientation')]}
{shape_aspect
shape_aspect.of_shape ->
product_definition_shape <=
property_definition
property_definition.definition ->
characterized_definition
characterized_definition = characterized_product_definition
characterized_product_definition
characterized_product_definition = product_definition
product_definition
product_definition.frame_of_reference ->
product_definition_context <=
application_context_element
(application_context_element.name = 'functional definition')
(application_context_element.name = 'physical definition')
(application_context_element.name = 'functional occurrence')
(application_context_element.name = 'physical occurrence')}

5.1.3.9.1 additional_length

AIM element: [measure_with_unit.value_component]
[measure_with_unit.unit_component]

Source: 41

Rules: subtype_exclusive_characterized_object
subtype_mandatory_shape_representation

© ISO 2001 – All rights reserved

Reference path: plant_item_connection <=
shape_aspect_relationship
shape_definition = shape_aspect_relationship
characterized_definition = shape_definition
characterized_definition <-
property_definition.definition
property_definition =>
product_definition_shape <-
shape_aspect.of_shape
[shape_aspect <-
shape_aspect_relationship.relating_shape_aspect]
[shape_aspect <-
shape_aspect_relationship.related_shape_aspect]
shape_aspect_relationship =>
dimensional_location
dimensional_characteristic = dimensional_location
dimensional_characteristic <-
dimensional_characteristic_representation.dimension
dimensional_characteristic_representation
dimensional_characteristic_representation.representation ->
shape_dimension_representation <=
shape_representation <=
{representation
representation.name = 'pipe dimensional shape'}
representation
representation.items[i] ->
{representation_item
representation_item.name = 'additional length'}

5.1.3.9.2 connection_commitment_target

AIM element: shape_aspect.description

Source: 41

Reference path: plant_item_connection <=
shape_aspect
shape_aspect.description

5.1.3.9.3 connection_id

AIM element: shape_aspect.name

Source: 41

Reference path: plant_item_connection <=
shape_aspect
shape_aspect.name

5.1.3.9.4 description

AIM element: shape_aspect_relationship.description

© ISO 2001 – All rights reserved

Source: 41

Reference path: plant_item_connection <=
shape_aspect_relationship
shape_aspect_relationship.description

5.1.3.9.5 shop_joint

AIM element: group.name

Source: 41

Reference path: plant_item_connection
classification_item = plant_item_connection
classification_item <-
applied_classification_assignment.items[i]
applied_classification_assignment <=
classification_assignment
{classification_assignment.role ->
classification_role
classification_role.name = 'shop joint type'}
classification_assignment.assigned_classification ->
group
group.name

5.1.3.9.6 plant_item_connection to connection_inspection_record

AIM element: PATH

Reference path: plant_item_connection <=
shape_aspect
shape_definition = shape_aspect
characterized_definition = shape_definition
characterized_definition <-
property_definition.definition
property_definition =>
{property_definition.description = 'connection inspection record'}
material_property

5.1.3.9.7 plant_item_connection to connection_material

AIM element: PATH

Reference path: plant_item_connection <=
shape_aspect
shape_aspect.of_shape ->
product_definition_shape <=
property_definition
property_definition.definition ->
characterized_definition
characterized_definition = characterized_product_definition
characterized_product_definition = product_definition

© ISO 2001 – All rights reserved

product_definition =>
connection_material_definition

5.1.3.9.8 plant_item_connection to changed_plant_item_connection

AIM element: IDENTICAL MAPPING

5.1.3.10 Plant_item_connection_occurrence

AIM element: plant_item_connection

Source: 227

Reference path: plant_item_connection <=
[shape_aspect_relationship]
[shape_aspect]
{shape_aspect
shape_aspect.of_shape ->
product_definition_shape <=
property_definition
property_definition.definition ->
characterized_definition
characterized_definition = characterized_product_definition
characterized_product_definition
characterized_product_definition = product_definition
product_definition
product_definition.frame_of_reference ->
product_definition_context <=
application_context_element
(application_context_element.name = 'functional occurrence')
(application_context_element.name = 'physical occurrence')}

5.1.3.10.1 field_fit

AIM element: group.name

Source: 41

Reference path: plant_item_connection
classification_item = plant_item_connection
classification_item <-
applied_classification_assignment.items[i]
applied_classification_assignment <=
classification_assignment
{classification_assignment.role ->
classification_role
classification_role.name = 'field fit type'}
classification_assignment.assigned_classification ->
group
group.name

© ISO 2001 – All rights reserved

5.1.3.10.2 plant_item_connection_occurrence to functional_connection_-occurrence_satisfaction (as functional requirements)

AIM element: PATH

Reference path:
plant_item_connection <=
{shape_aspect
shape_aspect.of_shape ->
product_definition_shape <=
property_definition
property_definition.definition ->
characterized_definition
characterized_definition = characterized_product_definition
characterized_product_definition
characterized_product_definition = product_definition
product_definition
product_definition.frame_of_reference ->
product_definition_context <=
application_context_element
application_context_element.name = 'functional occurrence'}
shape_aspect <-
shape_aspect_relationship.relating_shape_aspect
shape_aspect_relationship
{shape_aspect_relationship
shape_aspect_relationship.name = 'connection occurrence satisfaction'}

5.1.3.10.3 plant_item_connection_occurrence to functional_connection_-occurrence_satisfaction (as requirements satisfaction)

AIM element: PATH

Reference path:
plant_item_connection <=
{shape_aspect
shape_aspect.of_shape ->
product_definition_shape <=
property_definition
property_definition.definition ->
characterized_definition
characterized_definition = characterized_product_definition
characterized_product_definition
characterized_product_definition = product_definition
product_definition
product_definition.frame_of_reference ->
product_definition_context <=
application_context_element
application_context_element.name = 'physical occurrence'}
shape_aspect <-
shape_aspect_relationship.related_shape_aspect
shape_aspect_relationship
{shape_aspect_relationship
shape_aspect_relationship.name = 'connection occurrence satisfaction'}

© ISO 2001 – All rights reserved

5.1.3.10.4 plant_item_connection_occurrence to plant_item_connector_-occurrence

AIM element: PATH

Reference path: plant_item_connection <=
shape_aspect_relationship
[shape_aspect_relationship.relating_shape_aspect ->]
[shape_aspect_relationship.related_shape_aspect ->]
shape_aspect =>
plant_item_connector

5.1.4 Connector UoF

5.1.4.1 Branch_hole

AIM element: plant_item_connector

Source: 227

Reference path: plant_item_connector <=
shape_aspect
{plant_item_connector
classification_item = plant_item_connector
classification_item <-
applied_classification_assignment.items[i]
applied_classification_assignment <=
classification_assignment
classification_assignment.assigned_classification ->
[group =>
connector_end_type_class]
[group
group.name = 'branch hole']}

5.1.4.1.1 diameter

#1: The diameter is for the individual connector.

#2: The diameter is for the definition of a family of piping components.

AIM element: [measure_with_unit.value_component]
[measure_with_unit.unit_component]

Source: 41

Rules: subtype_exclusive_characterized_object
subtype_mandatory_shape_representation

Reference path: plant_item_connector <=
#1: (shape_aspect <-
dimensional_size.applies_to
dimensional_size

© ISO 2001 – All rights reserved

```
dimensional_characteristic = dimensional_size
dimensional_characteristic <-
dimensional_characteristic_representation.dimension
dimensional_characteristic_representation
dimensional_characteristic_representation.representation ->
shape_dimension_representation <=
shape_representation <=
{representation
representation.name = 'piping connector dimensional shape'}
representation
representation.items[i] ->
{representation_item
representation_item.name = 'diameter'})
#2: ({shape_aspect
shape_aspect.of_shape ->
product_definition_shape <=
property_definition
property_definition.definition ->
characterized_definition
characterized_definition = characterized_object
characterized_object =>
piping_component_class}
shape_aspect
shape_definition = shape_aspect
shape_definition
characterized_definition = shape_definition
characterized_definition <-
property_definition.definition
property_definition
represented_definition = property_definition
represented_definition <-
property_definition_representation.definition
property_definition_representation
property_definition_representation.used_representation ->
representation
(representation.items[i] ->
{representation_item
(representation_item.name = 'maximum diameter')
(representation_item.name = 'minimum diameter')})
([representation.items[i] ->
{representation_item
representation_item.name = 'maximum diameter'}]
[representation.items[i] ->
{representation_item
representation_item.name = 'minimum diameter'}]))
representation_item =>
measure_representation_item <=
{measure_with_unit =>
length_measure_with_unit}
measure_with_unit
[measure_with_unit.value_component]
[measure_with_unit.unit_component]
```


© ISO 2001 – All rights reserved

5.1.4.2 Buttweld

AIM element: plant_item_connector

Source: 227

Reference path: plant_item_connector <=
shape_aspect
{plant_item_connector
classification_item = plant_item_connector
classification_item <-
applied_classification_assignment.items[i]
applied_classification_assignment <=
classification_assignment
classification_assignment.assigned_classification ->
[group =>
piping_connector_class]
[group
group.name = 'buttweld']}

5.1.4.2.1 root_gap

AIM element: [measure_with_unit.value_component]
[measure_with_unit.unit_component]

Source: 41

Rules: subtype_mandatory_shape_representation

Reference path: plant_item_connector <=
shape_aspect <-
[shape_aspect_relationship.relating_shape_aspect
{shape_aspect_relationship
shape_aspect_relationship.name = 'connector dimensional aspect'}
shape_aspect_relationship
shape_aspect_relationship.related_shape_aspect ->
shape_aspect <-
shape_aspect_relationship.relating_shape_aspect]
[shape_aspect_relationship.relating_shape_aspect
{shape_aspect_relationship
shape_aspect_relationship.name = 'connector dimensional aspect'}
shape_aspect_relationship
shape_aspect_relationship.related_shape_aspect ->
shape_aspect <-
shape_aspect_relationship.related_shape_aspect]
shape_aspect_relationship =>
dimensional_location
dimensional_characteristic = dimensional_location
dimensional_characteristic <-
dimensional_characteristic_representation.dimension
dimensional_characteristic_representation
dimensional_characteristic_representation.representation ->

© ISO 2001 – All rights reserved

shape_dimension_representation <=
shape_representation <=
{representation
representation.name = 'piping connector dimensional shape'}
representation
representation.items[i] ->
{representation_item
representation_item.name = 'root gap'}
representation_item =>
measure_representation_item <=
{measure_with_unit =>
length_measure_with_unit}
measure_with_unit
[measure_with_unit.value_component]
[measure_with_unit.unit_component]

5.1.4.3 Catalogue_connector

AIM element: catalogue_connector

Source: 227

Reference path: catalogue_connector <=
[externally_defined_item]
[shape_aspect
{shape_aspect
shape_aspect.of_shape ->
product_definition_shape <=
property_definition
property_definition.definition ->
characterized_definition
characterized_definition = characterized_object
characterized_object}]

5.1.4.3.1 catalogue_connector to connector_definition (is defined by)

AIM element: PATH

Reference path: catalogue_connector <=
shape_aspect <-
shape_aspect_relationship.related_shape_aspect
{shape_aspect_relationship
shape_aspect_relationship.name = 'definition usage'}
shape_aspect_relationship
shape_aspect_relationship.relating_shape_aspect ->
shape_aspect =>
plant_item_connector

5.1.4.4 Clamped

AIM element: plant_item_connector

© ISO 2001 – All rights reserved

Source: 227

Reference path: plant_item_connector <=
shape_aspect
{plant_item_connector
classification_item = plant_item_connector
classification_item <-
applied_classification_assignment.items[i]
applied_classification_assignment <=
classification_assignment
classification_assignment.assigned_classification ->
[group =>
piping_connector_class]
[group
group.name = 'clamped']}

5.1.4.5 Connector_definition

AIM element: plant_item_connector

Source: 227

Reference path: plant_item_connector <=
shape_aspect
{shape_aspect
shape_aspect.of_shape ->
product_definition_shape <=
property_definition
property_definition.definition ->
characterized_definition
characterized_definition = characterized_product_definition
characterized_product_definition
characterized_product_definition = product_definition
product_definition
product_definition.frame_of_reference ->
product_definition_context <=
application_context_element
(application_context_element.name = 'functional definition')
(application_context_element.name = 'physical definition')}

5.1.4.5.1 connector_definition to catalogue_connector (is defined as)

AIM element: PATH

Reference path: plant_item_connector <=
shape_aspect <-
shape_aspect_relationship.related_shape_aspect
{shape_aspect_relationship
shape_aspect_relationship.name = 'catalogue usage'}
shape_aspect_relationship
shape_aspect_relationship.relating_shape_aspect ->
shape_aspect =>

© ISO 2001 – All rights reserved

catalogue_connector

5.1.4.5.2 connector_definition to functional_connector_definition_-satisfaction (as functional requirements for)

AIM element: PATH

Reference path:
plant_item_connector <=
shape_aspect
{shape_aspect
shape_aspect.of_shape ->
product_definition_shape <=
property_definition
property_definition.definition ->
characterized_definition
characterized_definition = characterized_product_definition
characterized_product_definition
characterized_product_definition = product_definition
product_definition
product_definition.frame_of_reference ->
product_definition_context <=
application_context_element
application_context_element.name = 'functional definition'}
shape_aspect <-
shape_aspect_relationship.relating_shape_aspect
shape_aspect_relationship
{shape_aspect_relationship
shape_aspect_relationship.name = 'connector definition satisfaction'}

5.1.4.5.3 connector_definition to functional_connector_definition_-satisfaction (as satisfies requirements for)

AIM element: PATH

Reference path:
plant_item_connector <=
{shape_aspect
shape_aspect.of_shape ->
product_definition_shape <=
property_definition
property_definition.definition ->
characterized_definition
characterized_definition = characterized_product_definition
characterized_product_definition
characterized_product_definition = product_definition
product_definition
product_definition.frame_of_reference ->
product_definition_context <=
application_context_element
application_context_element.name = 'physical definition'}
shape_aspect <-
shape_aspect_relationship.related_shape_aspect
shape_aspect_relationship

© ISO 2001 – All rights reserved

{shape_aspect_relationship
shape_aspect_relationship.name = 'connector definition satisfaction'}

5.1.4.5.4 connector_definition to plant_item_connector_occurrence

AIM element: PATH

Rules: application_context_requires_ap_definition
dependent_instantiable_application_context
dependent_instantiable_product_definition_context
product_definition_context_name_constraint

Reference path: plant_item_connector <=
shape_aspect <-
shape_aspect_relationship.relating_shape_aspect
{shape_aspect_relationship
shape_aspect_relationship.name = 'usage'}
shape_aspect_relationship
shape_aspect_relationship.related_shape_aspect ->
{shape_aspect
shape_aspect.of_shape ->
product_definition_shape <=
property_definition
property_definition.definition ->
characterized_definition
characterized_definition = characterized_product_definition
characterized_product_definition
characterized_product_definition = product_definition
product_definition
product_definition.frame_of_reference ->
product_definition_context <=
application_context_element
(application_context_element.name = 'functional occurrence')
(application_context_element.name = 'physical occurrence')}
shape_aspect =>
plant_item_connector

5.1.4.6 Cross_section_flat_oval

AIM element: hvac_cross_section

Source: 227

Reference path: hvac_cross_section <=
shape_aspect
{shape_aspect.description = 'flat oval'}

5.1.4.6.1 height

AIM element: [measure_with_unit.value_component]
[measure_with_unit.unit_component]

© ISO 2001 – All rights reserved

Source: 41

Rules: subtype_mandatory_shape_representation

Reference path: hvac_cross_section <=
shape_aspect <-
[shape_aspect_relationship.relating_shape_aspect
{shape_aspect_relationship
shape_aspect_relationship.name = 'cross section dimensional aspect'}
shape_aspect_relationship
shape_aspect_relationship.related_shape_aspect ->
shape_aspect <-
shape_aspect_relationship.relating_shape_aspect]
[shape_aspect_relationship.relating_shape_aspect
{shape_aspect_relationship
shape_aspect_relationship.name = 'cross section dimensional aspect'}
shape_aspect_relationship
shape_aspect_relationship.related_shape_aspect ->
shape_aspect <-
shape_aspect_relationship.related_shape_aspect]
shape_aspect_relationship =>
dimensional_location
dimensional_characteristic = dimensional_location
dimensional_characteristic <-
dimensional_characteristic_representation.dimension
dimensional_characteristic_representation
dimensional_characteristic_representation.representation ->
shape_dimension_representation <=
shape_representation <=
{representation
representation.name = 'hvac connector dimensional shape'}
representation
representation.items[i] ->
{representation_item
representation_item.name = 'height'}
representation_item =>
measure_representation_item <=
{measure_with_unit =>
length_measure_with_unit}
measure_with_unit
[measure_with_unit.value_component]
[measure_with_unit.unit_component]

5.1.4.6.2 width

AIM element: [measure_with_unit.value_component]
[measure_with_unit.unit_component]

Source: 41

Reference path: hvac_cross_section <=
shape_aspect <-
[shape_aspect_relationship.relating_shape_aspect
{shape_aspect_relationship

© ISO 2001 – All rights reserved

shape_aspect_relationship.name = 'cross section dimensional aspect'}
shape_aspect_relationship
shape_aspect_relationship.related_shape_aspect ->
shape_aspect <-
shape_aspect_relationship.relating_shape_aspect]
[shape_aspect_relationship.relating_shape_aspect
{shape_aspect_relationship
shape_aspect_relationship.name = 'cross section dimensional aspect'}
shape_aspect_relationship
shape_aspect_relationship.related_shape_aspect ->
shape_aspect <-
shape_aspect_relationship.related_shape_aspect]
shape_aspect_relationship =>
dimensional_location
dimensional_characteristic = dimensional_location
dimensional_characteristic <-
dimensional_characteristic_representation.dimension
dimensional_characteristic_representation
dimensional_characteristic_representation.representation ->
shape_dimension_representation <=
shape_representation <=
{representation
representation.name = 'hvac connector dimensional shape'}
representation
representation.items[i] ->
{representation_item
representation_item.name = 'width'}
representation_item =>
measure_representation_item <=
{measure_with_unit =>
length_measure_with_unit}
measure_with_unit
[measure_with_unit.value_component]
[measure_with_unit.unit_component]

5.1.4.7 Cross_section_non_standard

AIM element: hvac_cross_section

Source: 227

Reference path: hvac_cross_section <=
shape_aspect
{shape_aspect.description = 'non standard'}

5.1.4.7.1 closed_bounded_curve

AIM element: curve

Source: 42

Reference path: hvac_cross_section <=
shape_aspect

© ISO 2001 – All rights reserved

shape_definition = shape_aspect
shape_definition
characterized_definition = shape_definition
characterized_definition <-
property_definition.definition
property_definition
represented_definition = property_definition
represented_definition <-
property_definition_representation.definition
property_definition_representation
property_definition_representation.used_representation ->
representation
{representation.name = 'cross section representation'}
representation.items[i] ->
representation_item
{representation_item.name = 'closed bounded curve'}
representation_item =>
geometric_representation_item =>
curve

5.1.4.8 Cross_section_radiused_corner

AIM element: hvac_cross_section

Source: 227

Reference path: hvac_cross_section <=
shape_aspect
{shape_aspect.description = 'radiused corner'}

5.1.4.8.1 height

AIM element: [measure_with_unit.value_component]
[measure_with_unit.unit_component]

Source: 41

Rules: subtype_mandatory_shape_representation

Reference path: hvac_cross_section <=
shape_aspect <-
[shape_aspect_relationship.relating_shape_aspect
{shape_aspect_relationship
shape_aspect_relationship.name = 'cross section dimensional aspect'}
shape_aspect_relationship
shape_aspect_relationship.related_shape_aspect ->
shape_aspect <-
shape_aspect_relationship.relating_shape_aspect]
[shape_aspect_relationship.relating_shape_aspect
{shape_aspect_relationship
shape_aspect_relationship.name = 'cross section dimensional aspect'}
shape_aspect_relationship
shape_aspect_relationship.related_shape_aspect ->

© ISO 2001 – All rights reserved

shape_aspect <-
shape_aspect_relationship.related_shape_aspect]
shape_aspect_relationship =>
dimensional_location
dimensional_characteristic = dimensional_location
dimensional_characteristic <-
dimensional_characteristic_representation.dimension
dimensional_characteristic_representation
dimensional_characteristic_representation.representation ->
shape_dimension_representation <=
shape_representation <=
{representation
representation.name = 'hvac connector dimensional shape'}
representation
representation.items[i] ->
{representation_item
representation_item.name = 'height'}
representation_item =>
measure_representation_item <=
{measure_with_unit =>
length_measure_with_unit}
measure_with_unit
[measure_with_unit.value_component]
[measure_with_unit.unit_component]

5.1.4.8.2 width

AIM element: [measure_with_unit.value_component]
[measure_with_unit.unit_component]

Source: 41

Rules: subtype_mandatory_shape_representation

Reference path: hvac_cross_section <=
shape_aspect <-
[shape_aspect_relationship.relating_shape_aspect
{shape_aspect_relationship
shape_aspect_relationship.name = 'cross section dimensional aspect'}
shape_aspect_relationship
shape_aspect_relationship.related_shape_aspect ->
shape_aspect <-
shape_aspect_relationship.relating_shape_aspect]
[shape_aspect_relationship.relating_shape_aspect
{shape_aspect_relationship
shape_aspect_relationship.name = 'cross section dimensional aspect'}
shape_aspect_relationship
shape_aspect_relationship.related_shape_aspect ->
shape_aspect <-
shape_aspect_relationship.related_shape_aspect]
shape_aspect_relationship =>
dimensional_location
dimensional_characteristic = dimensional_location
dimensional_characteristic <-

© ISO 2001 – All rights reserved

dimensional_characteristic_representation.dimension
dimensional_characteristic_representation
dimensional_characteristic_representation.representation ->
shape_dimension_representation <=
shape_representation <=
{representation
representation.name = 'hvac connector dimensional shape'}
representation
representation.items[i] ->
{representation_item
representation_item.name = 'width'}
representation_item =>
measure_representation_item <=
{measure_with_unit =>
length_measure_with_unit}
measure_with_unit
[measure_with_unit.value_component]
[measure_with_unit.unit_component]

5.1.4.8.3 corner_radius

AIM element: [measure_with_unit.value_component]
[measure_with_unit.unit_component]

Source: 41

Rules: subtype_mandatory_shape_representation

Reference path: hvac_cross_section <=
shape_aspect <-
[shape_aspect_relationship.relating_shape_aspect
{shape_aspect_relationship
shape_aspect_relationship.name = 'cross section dimensional aspect'}
shape_aspect_relationship
shape_aspect_relationship.related_shape_aspect ->
shape_aspect <-
shape_aspect_relationship.relating_shape_aspect]
[shape_aspect_relationship.relating_shape_aspect
{shape_aspect_relationship
shape_aspect_relationship.name = 'cross section dimensional aspect'}
shape_aspect_relationship
shape_aspect_relationship.related_shape_aspect ->
shape_aspect <-
shape_aspect_relationship.related_shape_aspect]
shape_aspect_relationship =>
dimensional_location
dimensional_characteristic = dimensional_location
dimensional_characteristic <-
dimensional_characteristic_representation.dimension
dimensional_characteristic_representation
dimensional_characteristic_representation.representation ->
shape_dimension_representation <=
shape_representation <=
{representation

© ISO 2001 – All rights reserved

representation.name = 'hvac connector dimensional shape'}
representation
representation.items[i] ->
{representation_item
representation_item.name = 'corner radius'}
representation_item =>
measure_representation_item <=
{measure_with_unit =>
length_measure_with_unit}
measure_with_unit
[measure_with_unit.value_component]
[measure_with_unit.unit_component]

5.1.4.9 Cross_section_rectangular

AIM element: hvac_cross_section

Source: 227

Reference path: hvac_cross_section <=
shape_aspect
{shape_aspect.description = 'rectangular'}

5.1.4.9.1 height

AIM element: [measure_with_unit.value_component]
[measure_with_unit.unit_component]

Source: 41

Rules: subtype_mandatory_shape_representation

Reference path: hvac_cross_section <=
shape_aspect <-
[shape_aspect_relationship.relating_shape_aspect
{shape_aspect_relationship
shape_aspect_relationship.name = 'cross section dimensional aspect'}
shape_aspect_relationship
shape_aspect_relationship.related_shape_aspect ->
shape_aspect <-
shape_aspect_relationship.relating_shape_aspect]
[shape_aspect_relationship.relating_shape_aspect
{shape_aspect_relationship
shape_aspect_relationship.name = 'cross section dimensional aspect'}
shape_aspect_relationship
shape_aspect_relationship.related_shape_aspect ->
shape_aspect <-
shape_aspect_relationship.related_shape_aspect]
shape_aspect_relationship =>
dimensional_location
dimensional_characteristic = dimensional_location
dimensional_characteristic <-
dimensional_characteristic_representation.dimension

© ISO 2001 – All rights reserved

dimensional_characteristic_representation
dimensional_characteristic_representation.representation ->
shape_dimension_representation <=
shape_representation <=
{representation
representation.name = 'hvac connector dimensional shape'}
representation
representation.items[i] ->
{representation_item
representation_item.name = 'height'}
representation_item =>
measure_representation_item <=
{measure_with_unit =>
length_measure_with_unit}
measure_with_unit
[measure_with_unit.value_component]
[measure_with_unit.unit_component]

5.1.4.9.2 width

AIM element: [measure_with_unit.value_component]
[measure_with_unit.unit_component]

Source: 41

Rules: subtype_mandatory_shape_representation

Reference path: hvac_cross_section <=
shape_aspect <-
[shape_aspect_relationship.relating_shape_aspect
{shape_aspect_relationship
shape_aspect_relationship.name = 'cross section dimensional aspect'}
shape_aspect_relationship
shape_aspect_relationship.related_shape_aspect ->
shape_aspect <-
shape_aspect_relationship.relating_shape_aspect]
[shape_aspect_relationship.relating_shape_aspect
{shape_aspect_relationship
shape_aspect_relationship.name = 'cross section dimensional aspect'}
shape_aspect_relationship
shape_aspect_relationship.related_shape_aspect ->
shape_aspect <-
shape_aspect_relationship.related_shape_aspect]
shape_aspect_relationship =>
dimensional_location
dimensional_characteristic = dimensional_location
dimensional_characteristic <-
dimensional_characteristic_representation.dimension
dimensional_characteristic_representation
dimensional_characteristic_representation.representation ->
shape_dimension_representation <=
shape_representation <=
{representation
representation.name = 'hvac connector dimensional shape'}

© ISO 2001 – All rights reserved

representation
representation.items[i] ->
{representation_item
representation_item.name = 'width'}
representation_item =>
measure_representation_item <=
{measure_with_unit =>
length_measure_with_unit}
measure_with_unit
[measure_with_unit.value_component]
[measure_with_unit.unit_component]

5.1.4.10 Cross_section_round

AIM element: hvac_cross_section

Source: 227

Reference path: hvac_cross_section <=
shape_aspect
{shape_aspect.description = 'round'}

5.1.4.10.1 radius

AIM element: [measure_with_unit.value_component]
[measure_with_unit.unit_component]

Source: 41

Rules: subtype_mandatory_shape_representation

Reference path: hvac_cross_section <=
shape_aspect <-
[shape_aspect_relationship.relating_shape_aspect
{shape_aspect_relationship
shape_aspect_relationship.name = 'cross section dimensional aspect'}
shape_aspect_relationship
shape_aspect_relationship.related_shape_aspect ->
shape_aspect <-
shape_aspect_relationship.relating_shape_aspect]
[shape_aspect_relationship.relating_shape_aspect
{shape_aspect_relationship
shape_aspect_relationship.name = 'cross section dimensional aspect'}
shape_aspect_relationship
shape_aspect_relationship.related_shape_aspect ->
shape_aspect <-
shape_aspect_relationship.related_shape_aspect]
shape_aspect_relationship =>
dimensional_location
dimensional_characteristic = dimensional_location
dimensional_characteristic <-
dimensional_characteristic_representation.dimension
dimensional_characteristic_representation

© ISO 2001 – All rights reserved

dimensional_characteristic_representation.representation ->
shape_dimension_representation <=
shape_representation <=
{representation
representation.name = 'hvac connector dimensional shape'}
representation
representation.items[i] ->
{representation_item
representation_item.name = 'radius'}
representation_item =>
measure_representation_item <=
{measure_with_unit =>
length_measure_with_unit}
measure_with_unit
[measure_with_unit.value_component]
[measure_with_unit.unit_component]

5.1.4.11 Cross_section_triangular

AIM element: hvac_cross_section

Source: 227

Reference path: hvac_cross_section <=
shape_aspect
{shape_aspect.description = 'triangular'}

5.1.4.11.1 vertex_1

AIM element: cartesian_point

Source: 42

Reference path: hvac_cross_section <=
shape_aspect
shape_definition = shape_aspect
shape_definition
characterized_definition = shape_definition
characterized_definition <-
property_definition.definition
property_definition
represented_definition = property_definition
represented_definition <-
property_definition_representation.definition
property_definition_representation
property_definition_representation.used_representation ->
representation
{representation.name = 'cross section representation'}
representation.items[i] ->
representation_item
{representation_item.name = 'vertex 1'}
representation_item =>
geometric_representation_item =>

© ISO 2001 – All rights reserved

point =>
cartesian_point

5.1.4.11.2 vertex_2

AIM element: cartesian_point

Source: 42

Reference path: hvac_cross_section <=
shape_aspect
shape_definition = shape_aspect
shape_definition
characterized_definition = shape_definition
characterized_definition <-
property_definition.definition
property_definition
represented_definition = property_definition
represented_definition <-
property_definition_representation.definition
property_definition_representation
property_definition_representation.used_representation ->
representation
{representation.name = 'cross section representation'}
representation.items[i] ->
representation_item
{representation_item.name = 'vertex 2'}
representation_item =>
geometric_representation_item =>
point =>
cartesian_point

5.1.4.11.3 vertex_3

AIM element: cartesian_point

Source: 42

Reference path: hvac_cross_section <=
shape_aspect
shape_definition = shape_aspect
shape_definition
characterized_definition = shape_definition
characterized_definition <-
property_definition.definition
property_definition
represented_definition = property_definition
represented_definition <-
property_definition_representation.definition
property_definition_representation
property_definition_representation.used_representation ->
representation
{representation.name = 'cross section representation'}

© ISO 2001 – All rights reserved

representation.items[i] ->
representation_item
{representation_item.name = 'vertex 1'}
representation_item =>
geometric_representation_item =>
point =>
cartesian_point

5.1.4.12 Electrical_connector

AIM element: plant_item_connector

Source: 227

Reference path: plant_item_connector <=
shape_aspect
{plant_item_connector
classification_item = plant_item_connector
classification_item <-
applied_classification_assignment.items[i]
applied_classification_assignment <=
classification_assignment
classification_assignment.assigned_classification ->
group =>
electrical_connector_class}

5.1.4.12.1 type

AIM element: group.name

Source: 41

Reference path: plant_item_connector
classification_item = plant_item_connector
classification_item <-
applied_classification_assignment.items[i]
applied_classification_assignment <=
{classification_assignment
classification_assignment.role ->
classification_role
classification_role.name = 'electrical connector type classification'}
classification_assignment
classification_assignment.assigned_classification ->
{group =>
electrical_connector_class}
group
group.name

5.1.4.13 Female_end

AIM element: plant_item_connector

© ISO 2001 – All rights reserved

Source: 227

Reference path: plant_item_connector <=
shape_aspect
{plant_item_connector
classification_item = plant_item_connector
classification_item <-
applied_classification_assignment.items[i]
applied_classification_assignment <=
classification_assignment
classification_assignment.assigned_group ->
[group =>
connector_end_type_class]
[group
group.name = 'female end']}

5.1.4.13.1 depth

#1: The depth is for the individual connector.

#2: The depth is for the definition of a family of piping components.

AIM element: [measure_with_unit.value_component]
[measure_with_unit.unit_component]

Source: 41

Rules: subtype_exclusive_characterized_object
subtype_mandatory_shape_representation

Reference path: plant_item_connector <=
#1: (shape_aspect <-
[shape_aspect_relationship.relating_shape_aspect
{shape_aspect_relationship
shape_aspect_relationship.name = 'connector dimensional aspect'}
shape_aspect_relationship
shape_aspect_relationship.related_shape_aspect ->
shape_aspect <-
shape_aspect_relationship.relating_shape_aspect]
[shape_aspect_relationship.relating_shape_aspect
{shape_aspect_relationship
shape_aspect_relationship.name = 'connector dimensional aspect'}
shape_aspect_relationship
shape_aspect_relationship.related_shape_aspect ->
shape_aspect <-
shape_aspect_relationship.related_shape_aspect]
shape_aspect_relationship =>
dimensional_location
dimensional_characteristic = dimensional_location
dimensional_characteristic <-
dimensional_characteristic_representation.dimension
dimensional_characteristic_representation
dimensional_characteristic_representation.representation ->
shape_dimension_representation <=

© ISO 2001 – All rights reserved

```
shape_representation <=
{representation
representation.name = 'piping connector dimensional shape'}
representation
representation.items[i] ->
{representation_item
representation_item.name = 'depth'})

#2: ({shape_aspect
shape_aspect.of_shape ->
product_definition_shape <=
property_definition
property_definition.definition ->
characterized_definition
characterized_definition = characterized_object
characterized_object =>
piping_component_class}
shape_aspect
shape_definition = shape_aspect
shape_definition
characterized_definition = shape_definition
characterized_definition <-
property_definition.definition
property_definition
represented_definition = property_definition
represented_definition <-
property_definition_representation.definition
property_definition_representation
property_definition_representation.used_representation ->
{representation
representation.name = 'piping connector class dimension'}
representation
(representation.items[i] ->
{representation_item
(representation_item.name = 'maximum depth')
(representation_item.name = 'minimum depth')})
([representation.items[i] ->
{representation_item
representation_item.name = 'maximum depth'}]
[representation.items[i] ->
{representation_item
representation_item.name = 'minimum depth'}]))
representation_item =>
measure_representation_item <=
{measure_with_unit =>
length_measure_with_unit}
measure_with_unit
[measure_with_unit.value_component]
[measure_with_unit.unit_component]
```

5.1.4.13.2 hub_inside_diameter

© ISO 2001 – All rights reserved

#1: The diameter is for the individual connector.

#2: The diameter is for the definition of a family of piping components.

AIM element: [measure_with_unit.value_component]
[measure_with_unit.unit_component]

Source: 41

Rules: subtype_exclusive_characterized_object
subtype_mandatory_shape_representation

Reference path: plant_item_connector <=
#1: (shape_aspect <-
dimensional_size.applies_to
dimensional_size
dimensional_characteristic = dimensional_size
dimensional_characteristic <-
dimensional_characteristic_representation.dimension
dimensional_characteristic_representation
dimensional_characteristic_representation.representation ->
shape_dimension_representation <=
shape_representation <=
{representation
representation.name = 'piping connector dimensional shape'}
representation
representation.items[i] ->
{representation_item
representation_item.name = 'hub inside diameter'})

#2: ({shape_aspect
shape_aspect.of_shape ->
product_definition_shape <=
property_definition
property_definition.definition ->
characterized_definition
characterized_definition = characterized_object
characterized_object =>
piping_component_class}
shape_aspect
shape_definition = shape_aspect
shape_definition
characterized_definition = shape_definition
characterized_definition <-
property_definition.definition
property_definition
represented_definition = property_definition
represented_definition <-
property_definition_representation.definition
property_definition_representation
property_definition_representation.used_representation ->
{representation
representation.name = 'piping connector class dimension'}
representation

© ISO 2001 – All rights reserved

(representation.items[i] ->
{representation_item
(representation_item.name = 'maximum hub inside diameter')
(representation_item.name = 'minimum hub inside diameter')})
([representation.items[i] ->
{representation_item
representation_item.name = 'maximum hub inside diameter'}]
[representation.items[i] ->
{representation_item
representation_item.name = 'minimum hub inside diameter'}]))
representation_item =>
measure_representation_item <=
{measure_with_unit =>
length_measure_with_unit}
measure_with_unit
[measure_with_unit.value_component]
[measure_with_unit.unit_component]

5.1.4.13.3 hub_length

#1: The length is for the individual connector.

#2: The length is for the definition of a family of piping components.

AIM element: [measure_with_unit.value_component]
[measure_with_unit.unit_component]

Source: 41

Rules: subtype_exclusive_characterized_object
subtype_mandatory_shape_representation

Reference path: plant_item_connector <=
#1: (shape_aspect <-
dimensional_size.applies_to
dimensional_size
dimensional_characteristic = dimensional_size
dimensional_characteristic <-
dimensional_characteristic_representation.dimension
dimensional_characteristic_representation
dimensional_characteristic_representation.representation ->
shape_dimension_representation <=
shape_representation <=
{representation
representation.name = 'piping connector dimensional shape'}
representation
representation.items[i] ->
{representation_item
representation_item.name = 'hub length'})

#2: ({shape_aspect
shape_aspect.of_shape ->
product_definition_shape <=
property_definition

© ISO 2001 – All rights reserved

property_definition.definition ->
characterized_definition
characterized_definition = characterized_object
characterized_object =>
piping_component_class}
shape_aspect
shape_definition = shape_aspect
shape_definition
characterized_definition = shape_definition
characterized_definition <-
property_definition.definition
property_definition
represented_definition = property_definition
represented_definition <-
property_definition_representation.definition
property_definition_representation
property_definition_representation.used_representation ->
{representation
representation.name = 'piping connector class dimension'}
representation
(representation.items[i] ->
{representation_item
(representation_item.name = 'maximum hub length')
(representation_item.name = 'minimum hub length')})
([representation.items[i] ->
{representation_item
representation_item.name = 'maximum hub length'}]
[representation.items[i] ->
{representation_item
representation_item.name = 'minimum hub length'}]))
representation_item =>
measure_representation_item <=
{measure_with_unit =>
length_measure_with_unit}
measure_with_unit
[measure_with_unit.value_component]
[measure_with_unit.unit_component]

5.1.4.13.4 hub_outside_diameter

#1: The diameter is for the individual connector.

#2: The diameter is for the definition of a family of piping components.

AIM element: [measure_with_unit.value_component]
[measure_with_unit.unit_component]

Source: 41

Rules: subtype_exclusive_characterized_object
subtype_mandatory_shape_representation

Reference path: plant_item_connector <=

© ISO 2001 – All rights reserved

```
#1: (shape_aspect <-
dimensional_size.applies_to
dimensional_size
dimensional_characteristic = dimensional_size
dimensional_characteristic <-
dimensional_characteristic_representation.dimension
dimensional_characteristic_representation
dimensional_characteristic_representation.representation ->
shape_dimension_representation <=
shape_representation <=
{representation
representation.name = 'piping connector dimensional shape'}
representation
representation.items[i] ->
{representation_item
representation_item.name = 'hub outside diameter'})

#2: ({shape_aspect
shape_aspect.of_shape ->
product_definition_shape <=
property_definition
property_definition.definition ->
characterized_definition
characterized_definition = characterized_object
characterized_object =>
piping_component_class}
shape_aspect
shape_definition = shape_aspect
shape_definition
characterized_definition = shape_definition
characterized_definition <-
property_definition.definition
property_definition
represented_definition = property_definition
represented_definition <-
property_definition_representation.definition
property_definition_representation
property_definition_representation.used_representation ->
{representation
representation.name = 'piping connector class dimension'}
representation
(representation.items[i] ->
{representation_item
(representation_item.name = 'maximum hub outside diameter')
(representation_item.name = 'minimum hub outside diameter')})
([representation.items[i] ->
{representation_item
representation_item.name = 'maximum hub outside diameter'}]
[representation.items[i] ->
{representation_item
representation_item.name = 'minimum hub outside diameter'}]))
representation_item =>
measure_representation_item <=
{measure_with_unit =>
```


© ISO 2001 – All rights reserved

length_measure_with_unit}
measure_with_unit
[measure_with_unit.value_component]
[measure_with_unit.unit_component]

5.1.4.14 Flanged

AIM element: plant_item_connector

Source: 227

Reference path: plant_item_connector <=
shape_aspect
{plant_item_connector
classification_item = plant_item_connector
classification_item <-
applied_classification_assignment.items[i]
applied_classification_assignment <=
classification_assignment
classification_assignment.assigned_classification ->
[group =>
piping_connector_class]
[group
group.name = 'flanged']}

5.1.4.15 Flanged_end

AIM element: plant_item_connector

Source: 227

Reference path: plant_item_connector <=
shape_aspect
{plant_item_connector
classification_item = plant_item_connector
classification_item <-
applied_classification_assignment.items[i]
applied_classification_assignment <=
classification_assignment
classification_assignment.assigned_classification ->
[group =>
connector_end_type_class]
[group
group.name = 'flanged end']}

5.1.4.15.1 face_finish

AIM element: descriptive_representation_item.description

Source: 45

Reference path: plant_item_connector <=
shape_aspect

© ISO 2001 – All rights reserved

shape_definition = shape_aspect
shape_definition
characterized_definition = shape_definition
characterized_definition <-
property_definition.definition
property_definition
represented_definition = property_definition
represented_definition <-
property_definition_representation.definition
property_definition_representation
property_definition_representation.used_representation ->
representation
representation.items[i] ->
{representation_item
representation_item.name = 'face finish'}
representation_item =>
descriptive_representation_item
descriptive_representation_item.description

5.1.4.15.2 flange_inside_diameter

#1: The diameter is for the individual connector.

#2: The diameter is for the definition of a family of piping components.

AIM element: [measure_with_unit.value_component]
[measure_with_unit.unit_component]

Source: 41

Rules: subtype_exclusive_characterized_object
subtype_mandatory_shape_representation

Reference path: plant_item_connector <=
#1: (shape_aspect <-
dimensional_size.applies_to
dimensional_size
dimensional_characteristic = dimensional_size
dimensional_characteristic <-
dimensional_characteristic_representation.dimension
dimensional_characteristic_representation
dimensional_characteristic_representation.representation ->
shape_dimension_representation <=
shape_representation <=
{representation
representation.name = 'piping connector dimensional shape'}
representation
representation.items[i] ->
{representation_item
representation_item.name = 'flange inside diameter'})
#2: ({shape_aspect
shape_aspect.of_shape ->
product_definition_shape <=
property_definition

© ISO 2001 – All rights reserved

property_definition.definition ->
characterized_definition
characterized_definition = characterized_object
characterized_object =>
piping_component_class}
shape_aspect
shape_definition = shape_aspect
shape_definition
characterized_definition = shape_definition
characterized_definition <-
property_definition.definition
property_definition
represented_definition = property_definition
represented_definition <-
property_definition_representation.definition
property_definition_representation
property_definition_representation.used_representation ->
{representation
representation.name = 'piping connector class dimension'}
representation
(representation.items[i] ->
{representation_item
(representation_item.name = 'maximum flange inside diameter')
(representation_item.name = 'minimum flange inside diameter')})
([representation.items[i] ->
{representation_item
representation_item.name = 'maximum flange inside diameter'}]
[representation.items[i] ->
{representation_item
representation_item.name = 'minimum flange inside diameter'}]))
representation_item =>
measure_representation_item <=
{measure_with_unit =>
length_measure_with_unit}
measure_with_unit
[measure_with_unit.value_component]
[measure_with_unit.unit_component]

5.1.4.15.3 flange_outside_diameter

#1: The diameter is for the individual connector.

#2: The diameter is for the definition of a family of piping components.

AIM element: [measure_with_unit.value_component]
[measure_with_unit.unit_component]

Source: 41

Rules: subtype_exclusive_characterized_object
subtype_mandatory_shape_representation

Reference path: plant_item_connector <=
#1: (shape_aspect <-

© ISO 2001 – All rights reserved

```
                    dimensional_size.applies_to
                    dimensional_size
                    dimensional_characteristic = dimensional_size
                    dimensional_characteristic <-
                    dimensional_characteristic_representation.dimension
                    dimensional_characteristic_representation
                    dimensional_characteristic_representation.representation ->
                    shape_dimension_representation <=
                    shape_representation <=
                    {representation
                    representation.name = 'piping connector dimensional shape'}
                    representation
                    representation.items[i] ->
                    {representation_item
                    representation_item.name = 'flange outside diameter'})
                    #2: ({shape_aspect
                    shape_aspect.of_shape ->
                    product_definition_shape <=
                    property_definition
                    property_definition.definition ->
                    characterized_definition
                    characterized_definition = characterized_object
                    characterized_object =>
                    piping_component_class}
                    shape_aspect
                    shape_definition = shape_aspect
                    shape_definition
                    characterized_definition = shape_definition
                    characterized_definition <-
                    property_definition.definition
                    property_definition
                    represented_definition = property_definition
                    represented_definition <-
                    property_definition_representation.definition
                    property_definition_representation
                    property_definition_representation.used_representation ->
                    {representation
                    representation.name = 'piping connector class dimension'}
                    representation
                    (representation.items[i] ->
                    {representation_item
                    (representation_item.name = 'maximum flange outside diameter')
                    (representation_item.name = 'minimum flange outside diameter')})
                    ([representation.items[i] ->
                    {representation_item
                    representation_item.name = 'maximum flange outside diameter'}]
                    [representation.items[i] ->
                    {representation_item
                    representation_item.name = 'minimum flange outside diameter'}]))
                    representation_item =>
                    measure_representation_item <=
                    {measure_with_unit =>
                    length_measure_with_unit}
    measure_with_unit
```


© ISO 2001 – All rights reserved

[measure_with_unit.value_component]
[measure_with_unit.unit_component]

5.1.4.15.4 flange_thickness

#1: The thickness is for the individual connector.

#2: The thickness is for the definition of a family of piping components.

AIM element: [measure_with_unit.value_component]
[measure_with_unit.unit_component]

Source: 41

Rules: subtype_exclusive_characterized_object
subtype_mandatory_shape_representation

Reference path: plant_item_connector <=
#1: (shape_aspect <-
[shape_aspect_relationship.relating_shape_aspect
{shape_aspect_relationship
shape_aspect_relationship.name = 'connector dimensional aspect'}
shape_aspect_relationship
shape_aspect_relationship.related_shape_aspect ->
shape_aspect <-
shape_aspect_relationship.relating_shape_aspect]
[shape_aspect_relationship.relating_shape_aspect
{shape_aspect_relationship
shape_aspect_relationship.name = 'connector dimensional aspect'}
shape_aspect_relationship
shape_aspect_relationship.related_shape_aspect ->
shape_aspect <-
shape_aspect_relationship.related_shape_aspect]
shape_aspect_relationship =>
dimensional_location
dimensional_characteristic = dimensional_location
dimensional_characteristic <-
dimensional_characteristic_representation.dimension
dimensional_characteristic_representation
dimensional_characteristic_representation.representation ->
shape_dimension_representation <=
shape_representation <=
{representation
representation.name = 'piping connector dimensional shape'}
representation
representation.items[i] ->
{representation_item
representation_item.name = 'flange thickness'})
#2: ({shape_aspect
shape_aspect.of_shape ->
product_definition_shape <=
property_definition
property_definition.definition ->
characterized_definition

© ISO 2001 – All rights reserved

characterized_definition = characterized_object
characterized_object =>
piping_component_class}
shape_aspect
shape_definition = shape_aspect
shape_definition
characterized_definition = shape_definition
characterized_definition <-
property_definition.definition
property_definition
represented_definition = property_definition
represented_definition <-
property_definition_representation.definition
property_definition_representation
property_definition_representation.used_representation ->
{representation
representation.name = 'piping connector class dimension'}
representation
(representation.items[i] ->
{representation_item
(representation_item.name = 'maximum flange thickness')
(representation_item.name = 'minimum flange thickness')})
([representation.items[i] ->
{representation_item
representation_item.name = 'maximum flange thickness'}]
[representation.items[i] ->
{representation_item
representation_item.name = 'minimum flange thickness'}]))
representation_item =>
measure_representation_item <=
{measure_with_unit =>
length_measure_with_unit}
measure_with_unit
[measure_with_unit.value_component]
[measure_with_unit.unit_component]

5.1.4.15.5 raised_face_diameter

#1: The diameter is for the individual connector.

#2: The diameter is for the definition of a family of piping components.

AIM element: [measure_with_unit.value_component]
[measure_with_unit.unit_component]

Source: 41

Rules: subtype_exclusive_characterized_object
subtype_mandatory_externally_defined_item

Reference path: plant_item_connector <=
#1: (shape_aspect <-
dimensional_size.applies_to
dimensional_size

© ISO 2001 – All rights reserved

```
dimensional_characteristic = dimensional_size
dimensional_characteristic <-
dimensional_characteristic_representation.dimension
dimensional_characteristic_representation
dimensional_characteristic_representation.representation ->
shape_dimension_representation <=
shape_representation <=
{representation
representation.name = 'piping connector dimensional shape'}
representation
representation.items[i] ->
{representation_item
representation_item.name = 'raised face diameter'})
#2: ({shape_aspect
shape_aspect.of_shape ->
product_definition_shape <=
property_definition
property_definition.definition ->
characterized_definition
characterized_definition = characterized_object
characterized_object =>
piping_component_class}
shape_aspect
shape_definition = shape_aspect
shape_definition
characterized_definition = shape_definition
characterized_definition <-
property_definition.definition
property_definition
represented_definition = property_definition
represented_definition <-
property_definition_representation.definition
property_definition_representation
property_definition_representation.used_representation ->
{representation
representation.name = 'piping connector class dimension'}
representation
(representation.items[i] ->
{representation_item
(representation_item.name = 'maximum raised face diameter')
(representation_item.name = 'minimum raised face diameter')})
([representation.items[i] ->
{representation_item
representation_item.name = 'maximum raised face diameter'}]
[representation.items[i] ->
{representation_item
representation_item.name = 'minimum raised face diameter'}]))
representation_item =>
measure_representation_item <=
{measure_with_unit =>
length_measure_with_unit}
measure_with_unit
[measure_with_unit.value_component]
```


© ISO 2001 – All rights reserved

[measure_with_unit.unit_component]

5.1.4.15.6 raised_face_height

#1: The height is for the individual connector.

#2: The height is for the definition of a family of piping components.

AIM element: [measure_with_unit.value_component]
[measure_with_unit.unit_component]

Source: 41

Rules: subtype_exclusive_characterized_object
subtype_mandatory_externally_defined_item

Reference path: plant_item_connector <=
#1: (shape_aspect <-
[shape_aspect_relationship.relating_shape_aspect
{shape_aspect_relationship
shape_aspect_relationship.name = 'connector dimensional aspect'}
shape_aspect_relationship
shape_aspect_relationship.related_shape_aspect ->
shape_aspect <-
shape_aspect_relationship.relating_shape_aspect]
[shape_aspect_relationship.relating_shape_aspect
{shape_aspect_relationship
shape_aspect_relationship.name = 'connector dimensional aspect'}
shape_aspect_relationship
shape_aspect_relationship.related_shape_aspect ->
shape_aspect <-
shape_aspect_relationship.related_shape_aspect]
shape_aspect_relationship =>
dimensional_location
dimensional_characteristic = dimensional_location
dimensional_characteristic <-
dimensional_characteristic_representation.dimension
dimensional_characteristic_representation
dimensional_characteristic_representation.representation ->
shape_dimension_representation <=
shape_representation <=
{representation
representation.name = 'piping connector dimensional shape'}
representation
representation.items[i] ->
{representation_item
representation_item.name = 'raised face height'})
#2: ({shape_aspect
shape_aspect.of_shape ->
product_definition_shape <=
property_definition
property_definition.definition ->
characterized_definition
characterized_definition = characterized_object

© ISO 2001 – All rights reserved

characterized_object =>
piping_component_class}
shape_aspect
shape_definition = shape_aspect
shape_definition
characterized_definition = shape_definition
characterized_definition <-
property_definition.definition
property_definition
represented_definition = property_definition
represented_definition <-
property_definition_representation.definition
property_definition_representation
property_definition_representation.used_representation ->
{representation
representation.name = 'piping connector class dimension'}
representation
(representation.items[i] ->
{representation_item
(representation_item.name = 'maximum raised face height')
(representation_item.name = 'minimum raised face height')})
([representation.items[i] ->
{representation_item
representation_item.name = 'maximum raised face height'}]
[representation.items[i] ->
{representation_item
representation_item.name = 'minimum raised face height'}]))
representation_item =>
measure_representation_item <=
{measure_with_unit =>
length_measure_with_unit}
measure_with_unit
[measure_with_unit.value_component]
[measure_with_unit.unit_component]

5.1.4.15.7 ring_bottom_radius

AIM element: [measure_with_unit.value_component]
[measure_with_unit.unit_component]

Source: 41

Rules: subtype_mandatory_shape_representation

Reference path: plant_item_connector <=
shape_aspect <-
dimensional_size.applies_to
dimensional_size
dimensional_characteristic = dimensional_size
dimensional_characteristic <-
dimensional_characteristic_representation.dimension
dimensional_characteristic_representation
dimensional_characteristic_representation.representation ->
shape_dimension_representation <=

© ISO 2001 – All rights reserved

shape_representation <=
{representation
representation.name = 'piping connector dimensional shape'}
representation
representation.items[i] ->
{representation_item
representation_item.name = 'ring bottom radius'}
representation_item =>
measure_representation_item <=
{measure_with_unit =>
length_measure_with_unit}
measure_with_unit
[measure_with_unit.value_component]
[measure_with_unit.unit_component]

5.1.4.15.8 ring_diameter

AIM element: [measure_with_unit.value_component]
[measure_with_unit.unit_component]

Source: 41

Reference path: plant_item_connector <=
shape_aspect <-
dimensional_size.applies_to
dimensional_size
dimensional_characteristic = dimensional_size
dimensional_characteristic <-
dimensional_characteristic_representation.dimension
dimensional_characteristic_representation
dimensional_characteristic_representation.representation ->
shape_dimension_representation <=
shape_representation <=
{representation
representation.name = 'piping connector dimensional shape'}
representation
representation.items[i] ->
{representation_item
representation_item.name = 'ring diameter'}
representation_item =>
measure_representation_item <=
{measure_with_unit =>
length_measure_with_unit}
measure_with_unit
[measure_with_unit.value_component]
[measure_with_unit.unit_component]

5.1.4.15.9 ring_width

AIM element: [measure_with_unit.value_component]
[measure_with_unit.unit_component]

© ISO 2001 – All rights reserved

Source: 41

Rules: subtype_mandatory_shape_representation

Reference path: plant_item_connector <=
shape_aspect <-
[shape_aspect_relationship.relating_shape_aspect
{shape_aspect_relationship
shape_aspect_relationship.name = 'connector dimensional aspect'}
shape_aspect_relationship
shape_aspect_relationship.related_shape_aspect ->
shape_aspect <-
shape_aspect_relationship.relating_shape_aspect]
[shape_aspect_relationship.relating_shape_aspect
{shape_aspect_relationship
shape_aspect_relationship.name = 'connector dimensional aspect'}
shape_aspect_relationship
shape_aspect_relationship.related_shape_aspect ->
shape_aspect <-
shape_aspect_relationship.related_shape_aspect]
shape_aspect_relationship =>
dimensional_location
dimensional_characteristic = dimensional_location
dimensional_characteristic <-
dimensional_characteristic_representation.dimension
dimensional_characteristic_representation
dimensional_characteristic_representation.representation ->
shape_dimension_representation <=
shape_representation <=
{representation
representation.name = 'piping connector dimensional shape'}
representation
representation.items[i] ->
{representation_item
representation_item.name = 'ring width'}
representation_item =>
measure_representation_item <=
{measure_with_unit =>
length_measure_with_unit}
measure_with_unit
[measure_with_unit.value_component]
[measure_with_unit.unit_component]

5.1.4.15.10 face_type

AIM element: descriptive_representation_item.description

Source: 45

Reference path: plant_item_connector <=
shape_aspect
shape_definition = shape_aspect
shape_definition
characterized_definition = shape_definition

© ISO 2001 – All rights reserved

characterized_definition <-
property_definition.definition
property_definition
represented_definition = property_definition
represented_definition <-
property_definition_representation.definition
property_definition_representation
property_definition_representation.used_representation ->
representation
representation.items[i] ->
{representation_item
representation_item.name = 'face type'}
representation_item =>
descriptive_representation_item
descriptive_representation_item.description

5.1.4.16 Flared_end

AIM element: plant_item_connector

Source: 227

Reference path: plant_item_connector <=
shape_aspect
{plant_item_connector
classification_item = plant_item_connector
classification_item <-
applied_classification_assignment.items[i]
applied_classification_assignment <=
classification_assignment
classification_assignment.assigned_group ->
[group =>
connector_end_type_class]
[group
group.name = 'flared end']}

5.1.4.16.1 diameter

#1: The diameter is for the individual connector.

#2: The diameter is for the definition of a family of piping components.

AIM element: [measure_with_unit.value_component]
[measure_with_unit.unit_component]

Source: 41

Rules: subtype_exclusive_characterized_object
subtype_mandatory_shape_representation

Reference path: plant_item_connector <=
#1: (shape_aspect <-
[shape_aspect_relationship.relating_shape_aspect

© ISO 2001 – All rights reserved

```
{shape_aspect_relationship
shape_aspect_relationship.name = 'connector dimensional aspect'}
shape_aspect_relationship
shape_aspect_relationship.related_shape_aspect ->
shape_aspect <-
shape_aspect_relationship.relating_shape_aspect]
[shape_aspect_relationship.relating_shape_aspect
{shape_aspect_relationship
shape_aspect_relationship.name = 'connector dimensional aspect'}
shape_aspect_relationship
shape_aspect_relationship.related_shape_aspect ->
shape_aspect <-
shape_aspect_relationship.related_shape_aspect]
shape_aspect_relationship =>
dimensional_location
dimensional_characteristic = dimensional_location
dimensional_characteristic <-
dimensional_characteristic_representation.dimension
dimensional_characteristic_representation
dimensional_characteristic_representation.representation ->
shape_dimension_representation <=
shape_representation <=
{representation
representation.name = 'piping connector dimensional shape'}
representation
representation.items[i] ->
{representation_item
representation_item.name = 'diameter'})

#2: ({shape_aspect
shape_aspect.of_shape ->
product_definition_shape <=
property_definition
property_definition.definition ->
characterized_definition
characterized_definition = characterized_object
characterized_object =>
piping_component_class}
shape_aspect
shape_definition = shape_aspect
shape_definition
characterized_definition = shape_definition
characterized_definition <-
property_definition.definition
property_definition
represented_definition = property_definition
represented_definition <-
property_definition_representation.definition
property_definition_representation
property_definition_representation.used_representation ->
{representation
representation.name = 'piping connector class dimension'}
representation
(representation.items[i] ->
```


© ISO 2001 – All rights reserved

{representation_item
(representation_item.name = 'maximum diameter')
(representation_item.name = 'minimum diameter')})
([representation.items[i] ->
{representation_item
representation_item.name = 'maximum diameter'}]
[representation.items[i] ->
{representation_item
representation_item.name = 'minimum diameter'}]))
representation_item =>
measure_representation_item <=
{measure_with_unit =>
length_measure_with_unit}
measure_with_unit
[measure_with_unit.value_component]
[measure_with_unit.unit_component]

5.1.4.16.2 thickness

#1: The thickness is for the individual connector.

#2: The thickness is for the definition of a family of piping components.

AIM element: [measure_with_unit.value_component]
[measure_with_unit.unit_component]

Source: 41

Rules: subtype_exclusive_characterized_object
subtype_mandatory_shape_representation

Reference path: plant_item_connector <=
#1: (shape_aspect <-
[shape_aspect_relationship.relating_shape_aspect
{shape_aspect_relationship
shape_aspect_relationship.name = 'connector dimensional aspect'}
shape_aspect_relationship
shape_aspect_relationship.related_shape_aspect ->
shape_aspect <-
shape_aspect_relationship.relating_shape_aspect]
[shape_aspect_relationship.relating_shape_aspect
{shape_aspect_relationship
shape_aspect_relationship.name = 'connector dimensional aspect'}
shape_aspect_relationship
shape_aspect_relationship.related_shape_aspect ->
shape_aspect <-
shape_aspect_relationship.related_shape_aspect]
shape_aspect_relationship =>
dimensional_location
dimensional_characteristic = dimensional_location
dimensional_characteristic <-
dimensional_characteristic_representation.dimension
dimensional_characteristic_representation
dimensional_characteristic_representation.representation ->

© ISO 2001 – All rights reserved

```
shape_dimension_representation <=
shape_representation <=
{representation
representation.name = 'piping connector dimensional shape'}
representation
representation.items[i] ->
{representation_item
representation_item.name = 'thickness'})

#2: ({shape_aspect
shape_aspect.of_shape ->
product_definition_shape <=
property_definition
property_definition.definition ->
characterized_definition
characterized_definition = characterized_object
characterized_object =>
piping_component_class}
shape_aspect
shape_definition = shape_aspect
shape_definition
characterized_definition = shape_definition
characterized_definition <-
property_definition.definition
property_definition
represented_definition = property_definition
represented_definition <-
property_definition_representation.definition
property_definition_representation
property_definition_representation.used_representation ->
{representation
representation.name = 'piping connector class dimension'}
representation
(representation.items[i] ->
{representation_item
(representation_item.name = 'maximum thickness')
(representation_item.name = 'minimum thickness')})
([representation.items[i] ->
{representation_item
representation_item.name = 'maximum thickness'}]
[representation.items[i] ->
{representation_item
representation_item.name = 'minimum thickness'}]))
representation_item =>
measure_representation_item <=
{measure_with_unit =>
length_measure_with_unit}
measure_with_unit
[measure_with_unit.value_component]
[measure_with_unit.unit_component]
```

5.1.4.17 Functional_connector

© ISO 2001 – All rights reserved

AIM element: plant_item_connector

Source: 227

Reference path: plant_item_connector <=
shape_aspect
{shape_aspect
shape_aspect.of_shape ->
product_definition_shape <=
property_definition
property_definition.definition ->
characterized_definition
characterized_definition = characterized_product_definition
characterized_product_definition
characterized_product_definition = product_definition
product_definition
product_definition.frame_of_reference ->
product_definition_context <=
application_context_element
application_context_element.name = 'functional occurrence'}

5.1.4.17.1 functional_connector to functional_connector_occurrence_-satisfaction

AIM element: PATH

Reference path: plant_item_connector <=
shape_aspect <-
shape_aspect_relationship.relating_shape_aspect
{shape_aspect_relationship
shape_aspect_relationship.name = 'connector occurrence satisfaction'}

5.1.4.18 Functional_connector_definition_satisfaction

AIM element: shape_aspect_relationship

Source: 41

Reference path: {shape_aspect_relationship
shape_aspect_relationship.name = 'connector definition satisfaction'}

5.1.4.19 Functional_connector_occurrence_satisfaction

AIM element: shape_aspect_relationship

Source: 41

Reference path: {shape_aspect_relationship
shape_aspect_relationship.name = 'connector occurrence satisfaction'}

© ISO 2001 – All rights reserved

5.1.4.20 Grooved_end

AIM element: plant_item_connector

Source: 227

Reference path: plant_item_connector <=
shape_aspect
{plant_item_connector
classification_item = plant_item_connector
classification_item <-
applied_classification_assignment.items[i]
applied_classification_assignment <=
classification_assignment
classification_assignment.assigned_group ->
[group =>
connector_end_type_class]
[group
group.name = 'grooved end']}

5.1.4.20.1 width

#1: The width is for the individual connector.

#2: The width is for the definition of a family of piping components.

AIM element: [measure_with_unit.value_component]
[measure_with_unit.unit_component]

Source: 41

Rules: subtype_exclusive_characterized_object
subtype_mandatory_shape_representation

Reference path: plant_item_connector <=
#1: (shape_aspect <-
[shape_aspect_relationship.relating_shape_aspect
{shape_aspect_relationship
shape_aspect_relationship.name = 'connector dimensional aspect'}
shape_aspect_relationship
shape_aspect_relationship.related_shape_aspect ->
shape_aspect <-
shape_aspect_relationship.relating_shape_aspect]
[shape_aspect_relationship.relating_shape_aspect
{shape_aspect_relationship
shape_aspect_relationship.name = 'connector dimensional aspect'}
shape_aspect_relationship
shape_aspect_relationship.related_shape_aspect ->
shape_aspect <-
shape_aspect_relationship.related_shape_aspect]
shape_aspect_relationship =>
dimensional_location
dimensional_characteristic = dimensional_location
dimensional_characteristic <-

© ISO 2001 – All rights reserved

```
dimensional_characteristic_representation.dimension
dimensional_characteristic_representation
dimensional_characteristic_representation.representation ->
shape_dimension_representation <=
shape_representation <=
{representation
representation.name = 'piping connector dimensional shape'}
representation
representation.items[i] ->
{representation_item
representation_item.name = 'width'})

#2: ({shape_aspect
shape_aspect.of_shape ->
product_definition_shape <=
property_definition
property_definition.definition ->
characterized_definition
characterized_definition = characterized_object
characterized_object =>
piping_component_class}
shape_aspect
shape_definition = shape_aspect
shape_definition
characterized_definition = shape_definition
characterized_definition <-
property_definition.definition
property_definition
represented_definition = property_definition
represented_definition <-
property_definition_representation.definition
property_definition_representation
property_definition_representation.used_representation ->
{representation
representation.name = 'piping connector class dimension'}
representation
(representation.items[i] ->
{representation_item
(representation_item.name = 'maximum width')
(representation_item.name = 'minimum width')})
([representation.items[i] ->
{representation_item
representation_item.name = 'maximum width'}]
[representation.items[i] ->
{representation_item
representation_item.name = 'minimum width'}]))
representation_item =>
measure_representation_item <=
{measure_with_unit =>
length_measure_with_unit}
measure_with_unit
[measure_with_unit.value_component]
[measure_with_unit.unit_component]
```


© ISO 2001 – All rights reserved

5.1.4.20.2 depth

#1: The depth is for the individual connector.

#2: The depth is for the definition of a family of piping components.

AIM element: [measure_with_unit.value_component]
[measure_with_unit.unit_component]

Source: 41

Rules: subtype_exclusive_characterized_object
subtype_mandatory_shape_representation

Reference path: plant_item_connector <=
#1: (shape_aspect <-
[shape_aspect_relationship.relating_shape_aspect
{shape_aspect_relationship
shape_aspect_relationship.name = 'connector dimensional aspect'}
shape_aspect_relationship
shape_aspect_relationship.related_shape_aspect ->
shape_aspect <-
shape_aspect_relationship.relating_shape_aspect]
[shape_aspect_relationship.relating_shape_aspect
{shape_aspect_relationship
shape_aspect_relationship.name = 'connector dimensional aspect'}
shape_aspect_relationship
shape_aspect_relationship.related_shape_aspect ->
shape_aspect <-
shape_aspect_relationship.related_shape_aspect]
shape_aspect_relationship =>
dimensional_location
dimensional_characteristic = dimensional_location
dimensional_characteristic <-
dimensional_characteristic_representation.dimension
dimensional_characteristic_representation
dimensional_characteristic_representation.representation ->
shape_dimension_representation <=
shape_representation <=
{representation
representation.name = 'piping connector dimensional shape'}
representation
representation.items[i] ->
{representation_item
representation_item.name = 'depth'})

#2: ({shape_aspect
shape_aspect.of_shape ->
product_definition_shape <=
property_definition
property_definition.definition ->
characterized_definition
characterized_definition = characterized_object
characterized_object =>

© ISO 2001 – All rights reserved

piping_component_class}
shape_aspect
shape_definition = shape_aspect
shape_definition
characterized_definition = shape_definition
characterized_definition <-
property_definition.definition
property_definition
represented_definition = property_definition
represented_definition <-
property_definition_representation.definition
property_definition_representation
property_definition_representation.used_representation ->
{representation
representation.name = 'piping connector class dimension'}
representation
(representation.items[i] ->
{representation_item
(representation_item.name = 'maximum depth')
(representation_item.name = 'minimum depth')})
([representation.items[i] ->
{representation_item
representation_item.name = 'maximum depth'}]
[representation.items[i] ->
{representation_item
representation_item.name = 'minimum depth'}]))
representation_item =>
measure_representation_item <=
{measure_with_unit =>
length_measure_with_unit}
measure_with_unit
[measure_with_unit.value_component]
[measure_with_unit.unit_component]

5.1.4.20.3 distance_from_end

#1: The distance_from_end is for the individual connector.

#2: The distance_from_end is for the definition of a family of piping components.

AIM element: [measure_with_unit.value_component]
[measure_with_unit.unit_component]

Source: 41

Rules: subtype_exclusive_characterized_object
subtype_mandatory_shape_representation

Reference path: plant_item_connector <=
#1: (shape_aspect <-
[shape_aspect_relationship.relating_shape_aspect
{shape_aspect_relationship
shape_aspect_relationship.name = 'connector dimensional aspect'}
shape_aspect_relationship

© ISO 2001 – All rights reserved

```
shape_aspect_relationship.related_shape_aspect ->
shape_aspect <-
shape_aspect_relationship.relating_shape_aspect]
[shape_aspect_relationship.relating_shape_aspect
{shape_aspect_relationship
shape_aspect_relationship.name = 'connector dimensional aspect'}
shape_aspect_relationship
shape_aspect_relationship.related_shape_aspect ->
shape_aspect <-
shape_aspect_relationship.related_shape_aspect]
shape_aspect_relationship =>
dimensional_location
dimensional_characteristic = dimensional_location
dimensional_characteristic <-
dimensional_characteristic_representation.dimension
dimensional_characteristic_representation
dimensional_characteristic_representation.representation ->
shape_dimension_representation <=
shape_representation <=
{representation
representation.name = 'piping connector dimensional shape'}
representation
representation.items[i] ->
{representation_item
representation_item.name = 'distance from end'})

#2: ({shape_aspect
shape_aspect.of_shape ->
product_definition_shape <=
property_definition
property_definition.definition ->
characterized_definition
characterized_definition = characterized_object
characterized_object =>
piping_component_class}
shape_aspect
shape_definition = shape_aspect
shape_definition
characterized_definition = shape_definition
characterized_definition <-
property_definition.definition
property_definition
represented_definition = property_definition
represented_definition <-
property_definition_representation.definition
property_definition_representation
property_definition_representation.used_representation ->
{representation
representation.name = 'piping connector class dimension'}
representation
(representation.items[i] ->
{representation_item
(representation_item.name = 'maximum distance from end')
(representation_item.name = 'minimum distance from end')})
```


© ISO 2001 – All rights reserved

([representation.items[i] ->
{representation_item
representation_item.name = 'maximum distance from end'}]
[representation.items[i] ->
{representation_item
representation_item.name = 'minimum distance from end'}]))
representation_item =>
measure_representation_item <=
{measure_with_unit =>
length_measure_with_unit}
measure_with_unit
[measure_with_unit.value_component]
[measure_with_unit.unit_component]

5.1.4.21 Hvac_connector

AIM element: hvac_connector

Source: 227

Reference path: hvac_connector <=
shape_aspect
{shape_aspect
shape_aspect.product_definitional = TRUE}

5.1.4.21.1 name

AIM element: shape_aspect.name

Source: 41

Reference path: hvac_connector <=
shape_aspect
shape_aspect.name

5.1.4.21.2 hvac_connector_specification

AIM element: document

Source: 41

Reference path: hvac_connector
document_item = hvac_connector
document_item <-
applied_document_reference.items[i]
applied_document_reference <=
document_reference
document_reference.assigned_document ->
{document
document.kind ->
document_type
document_type.product_data_type = 'hvac connector specification'}

© ISO 2001 – All rights reserved

document

5.1.4.21.3 hvac_joint_inspection_specification

AIM element: document

Source: 41

Reference path: hvac_connector
document_item = hvac_connector
document_item <-
applied_document_reference.items[i]
applied_document_reference <=
document_reference
document_reference.assigned_document ->
{document
document.kind ->
document_type
document_type.product_data_type = 'hvac connector inspection specification'}
document

5.1.4.21.4 connector_flow_direction

AIM element: descriptive_representation_item.description

Source: 45

Reference path: hvac_connector <=
shape_aspect
shape_definition = shape_aspect
shape_definition
characterized_definition = shape_definition
characterized_definition <-
property_definition.definition
property_definition
represented_definition = property_definition
represented_definition <-
property_definition_representation.definition
property_definition_representation
property_definition_representation.used_representation ->
representation
{representation.name = 'hvac connector characteristics'}
representation.items[i] ->
{representation_item
representation_item.name = 'flow direction'}
representation_item =>
descriptive_representation_item
descriptive_representation_item.description

5.1.4.21.5 hvac_joint_test_specification

AIM element: document

© ISO 2001 – All rights reserved

Source: 41

Reference path: hvac_connector
document_item = hvac_connector
document_item <-
applied_document_reference.items[i]
applied_document_reference <=
document_reference
document_reference.assigned_document ->
{document
document.kind ->
document_type
document_type.product_data_type = 'hvac connector test specification'}
document

5.1.4.21.6 hvac_joint_engagement_length

AIM element: [measure_with_unit.value_component]
[measure_with_unit.unit_component]

Source: 41

Reference path: hvac_connector <=
shape_aspect
shape_definition = shape_aspect
shape_definition
characterized_definition = shape_definition
characterized_definition <-
property_definition.definition
property_definition
represented_definition = property_definition
represented_definition <-
property_definition_representation.definition
property_definition_representation
property_definition_representation.used_representation ->
representation
representation.items[i] ->
representation_item =>
{representation_item.name = 'engagement length'}
measure_representation_item <=
{measure_with_unit =>
length_measure_with_unit}
measure_with_unit
[measure_with_unit.value_component]
[measure_with_unit.unit_component]

5.1.4.21.7 hvac_joint_joining_type

AIM element: group.name

Source: 41

Reference path: hvac_connector

© ISO 2001 – All rights reserved

classification_item = hvac_connector
classification_item <-
applied_classification_assignment.items[i]
applied_classification_assignment <=
{classification_assignment
classification_assignment.role ->
classification_role
classification_role.name = 'hvac joint joining type classification'}
classification_assignment
classification_assignment.assigned_classification ->
group
group.name

5.1.4.21.8 hvac_joint_sealant_type

AIM element: group.name

Source: 41

Reference path: hvac_connector
classification_item = hvac_connector
classification_item <-
applied_classification_assignment.items[i]
applied_classification_assignment <=
{classification_assignment
classification_assignment.role ->
classification_role
classification_role.name = 'hvac joint sealant type classification'}
classification_assignment
classification_assignment.assigned_classification ->
group
group.name

5.1.4.21.9 hvac_joint_joint_type

AIM element: group.name

Source: 41

Reference path: hvac_connector
classification_item = hvac_connector
classification_item <-
applied_classification_assignment.items[i]
applied_classification_assignment <=
{classification_assignment
classification_assignment.role ->
classification_role
classification_role.name = 'hvac joint type classification'}
classification_assignment
classification_assignment.assigned_classification ->
group
group.name

© ISO 2001 – All rights reserved

5.1.4.21.10 hvac_joint_tightness

AIM element: group.name

Source: 41

Reference path: hvac_connector
classification_item = hvac_connector
classification_item <-
applied_classification_assignment.items[i]
applied_classification_assignment <=
{classification_assignment
classification_assignment.role ->
classification_role
classification_role.name = 'hvac joint tightness classification'}
classification_assignment
classification_assignment.assigned_classification ->
group
group.name

5.1.4.21.11 hvac_connector to hvac_cross_section

AIM element: PATH

Reference path: hvac_connector <=
shape_aspect <-
shape_aspect_relationship.relating_shape_aspect
shape_aspect_relationship
shape_aspect_relationship.related_shape_aspect ->
shape_aspect =>
hvac_cross_section

5.1.4.21.12 hvac_connector to hvac_connector_service_characteristic

AIM element: PATH

Reference path: hvac_connector <=
shape_aspect
shape_definition = shape_aspect
shape_definition
characterized_definition = shape_definition
characterized_definition <-
property_definition.definition
{property_definition
property_definition.name = 'hvac service characteristics'}
property_definition

5.1.4.22 Hvac_connector_service_characteristic

AIM element: property_definition

Source: 41

© ISO 2001 – All rights reserved

Reference path: property_definition
{property_definition.name = 'hvac service characteristic'}

5.1.4.22.1 design_pressure

AIM element: [measure_with_unit.value_component]
[measure_with_unit.unit_component]

Source: 41

Reference path: property_definition
represented_definition = property_definition
represented_definition <-
property_definition_representation.definition
property_definition_representation
property_definition_representation.using_representation ->
representation
{representation.name = 'design service characteristics'}
(representation.items[i] ->
{representation_item
(representation_item.name = 'pressure')
(representation_item.name = 'maximum pressure')
(representation_item.name = 'minimum pressure')})
([representation.items[i] ->
{representation_item
representation_item.name = 'maximum pressure'}]
[representation.items[i] ->
{representation_item
representation_item.name = 'minimum pressure'}])
representation_item =>
measure_representation_item <=
measure_with_unit
[measure_with_unit.value_component]
[measure_with_unit.unit_component]

5.1.4.22.2 design_temperature

AIM element: [measure_with_unit.value_component]
[measure_with_unit.unit_component]

Source: 41

Reference path: property_definition
represented_definition = property_definition
represented_definition <-
property_definition_representation.definition
property_definition_representation
property_definition_representation.using_representation ->
representation
{representation.name = 'design service characteristics'}
(representation.items[i] ->
{representation_item
(representation_item.name = 'temperature')

© ISO 2001 – All rights reserved

(representation_item.name = 'maximum temperature')
(representation_item.name = 'minimum temperature')})
([representation.items[i] ->
{representation_item
representation_item.name = 'maximum temperature'}]
[representation.items[i] ->
{representation_item
representation_item.name = 'minimum temperature'}])
representation_item =>
measure_representation_item <=
measure_with_unit
[measure_with_unit.value_component]
[measure_with_unit.unit_component]

5.1.4.22.3 hvac_connector_service_characteristic to service_operating_-case

AIM element: PATH

Reference path: property_definition <-
property_definition_relationship.related_property_definition
property_definition_relationship

5.1.4.23 Hvac_cross_section

AIM element: hvac_cross_section

Source: 227

Reference path: hvac_cross_section <=
shape_aspect

5.1.4.23.1 equivalent_length

AIM element: [measure_with_unit.value_component]
[measure_with_unit.unit_component]

Source: 41

Rules: subtype_mandatory_shape_representation

Reference path: hvac_cross_section <=
shape_aspect <-
[shape_aspect_relationship.relating_shape_aspect
{shape_aspect_relationship
shape_aspect_relationship.name = 'cross section dimensional aspect'}
shape_aspect_relationship
shape_aspect_relationship.related_shape_aspect ->
shape_aspect <-
shape_aspect_relationship.relating_shape_aspect]
[shape_aspect_relationship.relating_shape_aspect
{shape_aspect_relationship
shape_aspect_relationship.name = 'cross section dimensional aspect'}

© ISO 2001 – All rights reserved

shape_aspect_relationship
shape_aspect_relationship.related_shape_aspect ->
shape_aspect <-
shape_aspect_relationship.related_shape_aspect]
shape_aspect_relationship =>
dimensional_location
dimensional_characteristic = dimensional_location
dimensional_characteristic <-
dimensional_characteristic_representation.dimension
dimensional_characteristic_representation
dimensional_characteristic_representation.representation ->
shape_dimension_representation <=
shape_representation <=
{representation
representation.name = 'hvac connector dimensional shape'}
representation
representation.items[i] ->
{representation_item
representation_item.name = 'equivalent length'}
representation_item =>
measure_representation_item <=
{measure_with_unit =>
length_measure_with_unit}
measure_with_unit
[measure_with_unit.value_component]
[measure_with_unit.unit_component]

5.1.4.24 Hvac_branch_connection

AIM element: hvac_branch_connection

Source: 227

Reference path: hvac_branch_connection <=
shape_aspect_relationship
{shape_aspect_relationship
[shape_aspect_relationship.description = 'branch location']
[shape_aspect_relationship.relating_shape_aspect ->
shape_aspect
shape_aspect.of_shape ->
product_definition_shape <=
property_definition
property_definition.definition ->
characterized_definition
characterized_definition = characterized_product_definition
characterized_product_definition
characterized_product_definition = product_definition
product_definition =>
hvac_section_segment_definition]
[shape_aspect_relationship.related_shape_aspect ->
shape_aspect =>
hvac_section_segment_termination]}

© ISO 2001 – All rights reserved

5.1.4.24.1 branch_sequence_id

AIM element: shape_aspect_relationship.name

Source: 41

Reference path: hvac_branch_connection <=
{shape_aspect_relationship
shape_aspect_relationship.relating_shape_aspect ->
shape_aspect
shape_aspect.of_shape ->
product_definition_shape <-
[shape_aspect.of_shape
shape_aspect
shape_aspect.description = 'termination 1']
[shape_aspect.of_shape
shape_aspect
shape_aspect.description = 'termination 2']}
shape_aspect_relationship
shape_aspect_relationship.name

5.1.4.25 Hvac_plant_item_branch_connector

AIM element: hvac_connector

Source: 227

Reference path: hvac_connector <=
shape_aspect
{shape_aspect
shape_aspect.description = 'hvac plant item branch connector'}

5.1.4.25.1 hvac_plant_item_branch_connector to hvac_plant_item_-branch_connection

AIM element: PATH

Reference path: hvac_connector <=
shape_aspect <-
shape_aspect_relationship.related_shape_aspect
shape_aspect_relationship =>
hvac_plant_item_branch_connection

5.1.4.26 Hvac_plant_item_connector

AIM element: hvac_connector

Source: 227

Reference path: hvac_connector <=
shape_aspect
{shape_aspect

© ISO 2001 – All rights reserved

shape_aspect.description = 'hvac plant item connector'}

5.1.4.26.1 hvac_plant_item_connector to hvac_plant_item_connection

AIM element: PATH

Reference path: hvac_connector <=
shape_aspect <-
shape_aspect_relationship.related_shape_aspect
shape_aspect_relationship =>
hvac_plant_item_connection

5.1.4.27 Male_end

AIM element: plant_item_connector

Source: 227

Reference path: plant_item_connector <=
shape_aspect
{plant_item_connector
classification_item = plant_item_connector
classification_item <-
applied_classification_assignment.items[i]
applied_classification_assignment <=
classification_assignment
classification_assignment.assigned_classification ->
[group =>
connector_end_type_class]
[group
group.name = 'male end']}

5.1.4.27.1 inner_end_preparation

AIM element: descriptive_representation_item.description

Source: 45

Reference path: plant_item_connector <=
shape_aspect
shape_definition = shape_aspect
shape_definition
characterized_definition = shape_definition
characterized_definition <-
property_definition.definition
property_definition
represented_definition = property_definition
represented_definition <-
property_definition_representation.definition
property_definition_representation
property_definition_representation.used_representation ->
representation
representation.items[i] ->

© ISO 2001 – All rights reserved

{representation_item
representation_item.name = 'inner end preparation'}
representation_item =>
descriptive_representation_item
descriptive_representation_item.description

5.1.4.27.2 outer_end_preparation

AIM element: descriptive_representation_item.description

Source: 45

Reference path: plant_item_connector <=
shape_aspect
shape_definition = shape_aspect
shape_definition
characterized_definition = shape_definition
characterized_definition <-
property_definition.definition
property_definition
represented_definition = property_definition
represented_definition <-
property_definition_representation.definition
property_definition_representation
property_definition_representation.used_representation ->
representation
representation.items[i] ->
{representation_item
representation_item.name = 'outer end preparation'}
representation_item =>
descriptive_representation_item
descriptive_representation_item.description

5.1.4.28 Node

AIM element: plant_item_connector

Source: 227

Reference path: plant_item_connector <=
shape_aspect
{shape_aspect
[shape_aspect.description = 'node']
[shape_aspect.of_shape ->
product_definition_shape <=
property_definition
property_definition.definition ->
characterized_definition
characterized_definition = characterized_product_definition
characterized_product_definition
characterized_product_definition = product_definition
product_definition
product_definition.frame_of_reference ->

© ISO 2001 – All rights reserved

product_definition_context <=
application_context_element
application_context_element.name = 'functional occurrence']}

5.1.4.28.1 node to route

AIM element: PATH

Reference path: plant_item_connector <=
shape_aspect
shape_aspect.of_shape ->
product_definition_shape <=
property_definition
property_definition.definition ->
characterized_definition
characterized_definition = characterized_product_definition
characterized_product_definition
characterized_product_definition = product_definition
product_definition <-
product_definition_relationship.related_product_definition
product_definition_relationship
product_definition_relationship.related_product_definition ->
product_definition
characterized_product_definition = product_definition
characterized_product_definition
characterized_definition = characterized_product_definition
characterized_definition <-
property_definition.definition
property_definition =>
product_definition_shape =>
plant_item_route

5.1.4.29 Physical_connector

AIM element: plant_item_connector

Source: 227

Reference path: plant_item_connector <=
shape_aspect
{shape_aspect
shape_aspect.of_shape ->
product_definition_shape <=
property_definition
property_definition.definition ->
characterized_definition
characterized_definition = characterized_product_definition
characterized_product_definition
characterized_product_definition = product_definition
product_definition
product_definition.frame_of_reference ->
product_definition_context <=
application_context_element

© ISO 2001 – All rights reserved

application_context_element.name = 'physical occurrence'}

5.1.4.29.1 physical_connector to functional_connector_occurrence_-satisfaction

AIM element: PATH

Reference path: plant_item_connector <=
shape_aspect <-
shape_aspect_relationship.related_shape_aspect
{shape_aspect_relationship
shape_aspect_relationship.name = 'connector occurrence satisfaction'}

5.1.4.30 Piping_connector

AIM element: plant_item_connector

Source: 227

Reference path: plant_item_connector <=
shape_aspect
{plant_item_connector
classification_item = plant_item_connector
classification_item <-
applied_classification_assignment.items[i]
applied_classification_assignment <=
classification_assignment
classification_assignment.assigned_classification ->
group =>
piping_connector_class}
{(plant_item_connector)
(plant_item_connector
classification_item = plant_item_connector
classification_item <-
applied_classification_assignment.items[i]
applied_classification_assignment <=
classification_assignment
classification_assignment.assigned_classification ->
group =>
connector_end_type_class)}

5.1.4.30.1 connector_flow_direction

AIM element: descriptive_representation_item.description

Source: 45

Reference path: plant_item_connector <=
shape_aspect
shape_definition = shape_aspect
shape_definition
characterized_definition = shape_definition

© ISO 2001 – All rights reserved

characterized_definition <-
property_definition.definition
property_definition
represented_definition = property_definition
represented_definition <-
property_definition_representation.definition
property_definition_representation
property_definition_representation.used_representation ->
representation
representation.items[i] ->
{representation_item
representation_item.name = 'flow direction'}
representation_item =>
descriptive_representation_item
descriptive_representation_item.description

5.1.4.30.2 connector_specifications

AIM element: document_usage_constraint.subject_element_value

Source: 41

Reference path: plant_item_connector
document_item = plant_item_connector
document_item <-
applied_document_reference.items[i]
applied_document_reference <=
document_reference
document_reference.assigned_document ->
{document
document.kind ->
document_type
document_type.product_data_type = 'connector specification'}
document <-
document_usage_constraint.source
document_usage_constraint
document_usage_constraint.subject_element_value

5.1.4.30.3 name

AIM element: shape_aspect.description

Source: 41

Reference path: plant_item_connector <=
shape_aspect
shape_aspect.description

5.1.4.30.4 piping_connector to piping_connector_service_characteristic

AIM element: PATH

© ISO 2001 – All rights reserved

Reference path: plant_item_connector <=
shape_aspect
shape_definition = shape_aspect
shape_definition
characterized_definition = shape_definition
characterized_definition <-
property_definition.definition
{property_definition
property_definition.name = 'service characteristics'}
property_definition

5.1.4.30.5 piping_connector to piping_size_description

AIM element: PATH

Reference path: plant_item_connector <=
shape_aspect <-
dimensional_size.applies_to
dimensional_size
dimensional_characteristic = dimensional_size
dimensional_characteristic <-
dimensional_characteristic_representation.dimension
dimensional_characteristic_representation
dimensional_characteristic_representation.representation ->
shape_dimension_representation

5.1.4.31 Piping_connector_service_characteristic

AIM element: property_definition

Source: 41

Reference path: {property_definition
property_definition.name = 'service characteristics'}

5.1.4.31.1 design_pressure

AIM element: [measure_with_unit.value_component]
[measure_with_unit.unit_component]

Source: 41

Reference path: property_definition
represented_definition = property_definition
represented_definition <-
property_definition_representation.definition
property_definition_representation
property_definition_representation.used_representation ->
{representation
representation.name = 'design service characteristics'}
representation
(representation.items[i] ->
{representation_item

© ISO 2001 – All rights reserved

(representation_item.name = 'pressure')
(representation_item.name = 'maximum pressure')
(representation_item.name = 'minimum pressure')})
([representation.items[i] ->
{representation_item
representation_item.name = 'maximum pressure'}]
[representation.items[i] ->
{representation_item
representation_item.name = 'minimum pressure'}])
representation_item =>
measure_representation_item <=
measure_with_unit
[{measure_with_unit.value_component ->
measure_value
measure_value = ratio_measure}
measure_with_unit.value_component]
[{measure_with_unit.unit_component ->
unit
unit = derived_unit}
measure_with_unit.unit_component]

5.1.4.31.2 design_temperature

AIM element: [measure_with_unit.value_component]
[measure_with_unit.unit_component]

Source: 41

Reference path: property_definition
represented_definition = property_definition
represented_definition <-
property_definition_representation.definition
property_definition_representation
property_definition_representation.used_representation ->
{representation
representation.name = 'design service characteristics'}
representation
(representation.items[i] ->
{representation_item
(representation_item.name = 'temperature')
(representation_item.name = 'maximum temperature')
(representation_item.name = 'minimum temperature')})
([representation.items[i] ->
{representation_item
representation_item.name = 'maximum temperature'}]
[representation.items[i] ->
{representation_item
representation_item.name = 'minimum temperature'}])
representation_item =>
measure_representation_item <=
{measure_with_unit =>
thermodynamic_temperature_measure_with_unit}
measure_with_unit

© ISO 2001 – All rights reserved

[measure_with_unit.value_component]
[measure_with_unit.unit_component]

5.1.4.31.3 piping_connector_service_characteristic to service_operating_-case

AIM element: PATH

Reference path: property_definition <-
property_definition_relationship.related_property_definition
property_definition_relationship

5.1.4.32 Plant_item_connector

AIM element: plant_item_connector

Source: 227

Reference path: plant_item_connector <=
shape_aspect
{shape_aspect
shape_aspect.product_definitional = TRUE}

5.1.4.32.1 connect_point

AIM element: cartesian_point

Source: 42

Reference path: plant_item_connector <=
shape_aspect
shape_definition = shape_aspect
shape_definition
characterized_definition = shape_definition
characterized_definition <-
property_definition.definition
property_definition
represented_definition = property_definition
represented_definition <-
property_definition_representation.definition
property_definition_representation
property_definition_representation.used_representation ->
representation
representation.items[i] ->
{representation_item
representation_item.name = 'connect point'}
representation_item =>
geometric_representation_item =>
point =>
cartesian_point

© ISO 2001 – All rights reserved

5.1.4.32.2 plant_item_connector_id

AIM element: shape_aspect.name

Source: 41

Reference path: plant_item_connector <=
shape_aspect
shape_aspect.name

5.1.4.32.3 plant_item_connector to changed_plant_item_connector

AIM element: IDENTICAL MAPPING

5.1.4.32.4 plant_item_connector to external_classification

AIM element: PATH

Reference path: plant_item_connector
classification_item = plant_item_connector
classification_item <-
applied_classification_assignment.items[i]
applied_classification_assignment <=
classification_assignment
classification_assignment.assigned_classification ->
group =>
externally_defined_class

5.1.4.32.5 plant_item_connector to required_material_description

AIM element: PATH

Reference path: plant_item_connector <=
shape_aspect
shape_definition = shape_aspect
shape_definition
characterized_definition = shape_definition
characterized_definition <-
property_definition.definition
{property_definition =>
material_property =>
required_material_property}
property_definition <-
property_definition_relationship.related_property_definition
{property_definition_relationship
property_definition_relationship.name = 'requirement allocation'}
property_definition_relationship
property_definition_relationship.relating_property_definition ->
{property_definition =>
material_property}
property_definition
property_definition.definition ->

© ISO 2001 – All rights reserved

characterized_definition
characterized_definition = characterized_product_definition
characterized_product_definition
characterized_product_definition = product_definition
product_definition

5.1.4.32.6 plant_item_connector to shape_representation

AIM element: PATH

Rules: subtype_mandatory_shape_representation

Reference path: plant_item_connector <=
shape_aspect
represented_definition = shape_aspect
represented_definition <-
property_definition_representation.definition
property_definition_representation
property_definition_representation.used_representation ->
representation =>
shape_representation =>
(plant_csg_shape_representation)
(hybrid_shape_representation)

5.1.4.32.7 plant_item_connector to shape_inspection_record

AIM element: PATH

Reference path: plant_item_connector <=
shape_aspect
shape_definition = shape_aspect
characterized_definition = shape_definition
characterized_definition <-
property_definition.definition
property_definition =>
{property_definition.description = 'shape inspection record'}
material_property

5.1.4.32.8 plant_item_connector to piping_component_inspection_record

AIM element: PATH

Reference path: plant_item_connector <=
shape_aspect
shape_definition = shape_aspect
characterized_definition = shape_definition
characterized_definition <-
property_definition.definition
property_definition =>
{property_definition.description = 'piping component inspection record'}
material_property

© ISO 2001 – All rights reserved

5.1.4.33 Plant_item_connector_occurrence

AIM element: plant_item_connector

Source: 227

Reference path: plant_item_connector <=
shape_aspect
{shape_aspect
shape_aspect.of_shape ->
product_definition_shape <=
property_definition
property_definition.definition ->
characterized_definition
characterized_definition = characterized_product_definition
characterized_product_definition
characterized_product_definition = product_definition
product_definition
product_definition.frame_of_reference ->
product_definition_context <=
application_context_element
(application_context_element.name = 'functional occurrence')
(application_context_element.name = 'physical occurrence')}

5.1.4.33.1 orientation

AIM element: (axis2_placement_2d)
(axis2_placement_3d)

Source: 42

Reference path: plant_item_connector <=
shape_aspect
represented_definition = shape_aspect
represented_definition <-
property_definition_representation.definition
property_definition_representation
property_definition_representation.used_representation ->
representation
representation.items[i] ->
{representation_item
representation_item.name = 'connector orientation'}
representation_item =>
geometric_representation_item =>
{placement
placement.location ->
cartesian_point <=
point <=
geometric_representation_item <=
representation_item
representation_item.name = 'connect point'}
placement =>
(axis2_placement_2d)

© ISO 2001 – All rights reserved

(axis2_placement_3d)

5.1.4.34 Pressure_fit

AIM element: plant_item_connector

Source: 227

Reference path: plant_item_connector <=
shape_aspect
{plant_item_connector
classification_item = plant_item_connector
classification_item <-
applied_classification_assignment.items[i]
applied_classification_assignment <=
classification_assignment
classification_assignment.assigned_classification ->
[group =>
piping_connector_class]
[group
group.name = 'pressure fit']}

5.1.4.35 Service_operating_case

AIM element: property_definition_relationship

Source: 45

Reference path: {property_definition_relationship
[property_definition_relationship.relating_property_definition ->
property_definition =>
stream_design_case]
[property_definition_relationship.related_property_definition ->
property_definition
property_definition.name = 'service characteristics']}

5.1.4.35.1 duration

AIM element: [measure_with_unit.value_component]
[measure_with_unit.unit_component]

Source: 41

Reference path: property_definition_relationship
property_definition_relationship.related_property_definition ->
property_definition
represented_definition = property_definition
represented_definition <-
property_definition_representation.definition
property_definition_representation
property_definition_representation.used_representation ->
{representation
representation.name = 'service operating characteristics'}

© ISO 2001 – All rights reserved

representation
(representation.items[i] ->
{representation_item
(representation_item.name = 'duration')
(representation_item.name = 'maximum duration')
(representation_item.name = 'minimum duration')})
([representation.items[i] ->
{representation_item
representation_item.name = 'maximum duration'}]
[representation.items[i] ->
{representation_item
representation_item.name = 'minimum duration'}])
representation_item =>
measure_representation_item <=
{measure_with_unit =>
time_measure_with_unit}
measure_with_unit
[measure_with_unit.value_component]
[measure_with_unit.unit_component]

5.1.4.35.2 frequency

AIM element: [measure_with_unit.value_component]
[measure_with_unit.unit_component]

Source: 41

Reference path: property_definition_relationship
property_definition_relationship.related_property_definition ->
property_definition
represented_definition = property_definition
represented_definition <-
property_definition_representation.definition
property_definition_representation
property_definition_representation.used_representation ->
{representation
representation.name = 'service operating characteristics'}
representation
(representation.items[i] ->
{representation_item
(representation_item.name = 'frequency')
(representation_item.name = 'maximum frequency')
(representation_item.name = 'minimum frequency')})
([representation.items[i] ->
{representation_item
representation_item.name = 'maximum frequency'}]
[representation.items[i] ->
{representation_item
representation_item.name = 'minimum frequency'}])
representation_item =>
measure_representation_item <=
measure_with_unit
[measure_with_unit.value_component]

© ISO 2001 – All rights reserved

[measure_with_unit.unit_component]

5.1.4.35.3 name

AIM element: property_definition_relationship.description

Source: 45

5.1.4.35.4 operating_case_id

AIM element: property_definition_relationship.name

Source: 45

5.1.4.35.5 operating_pressure

AIM element: [measure_with_unit.value_component]
[measure_with_unit.unit_component]

Source: 41

Reference path: property_definition_relationship
property_definition_relationship.related_property_definition ->
property_definition
represented_definition = property_definition
represented_definition <-
property_definition_representation.definition
property_definition_representation
property_definition_representation.used_representation ->
{representation
representation.name = 'service operating characteristics'}
representation
(representation.items[i] ->
{representation_item
(representation_item.name = 'pressure')
(representation_item.name = 'maximum pressure')
(representation_item.name = 'minimum pressure')})
([representation.items[i] ->
{representation_item
representation_item.name = 'maximum pressure'}]
[representation.items[i] ->
{representation_item
representation_item.name = 'minimum pressure'}])
representation_item =>
measure_representation_item <=
measure_with_unit
[{measure_with_unit.value_component ->
measure_value
measure_value = ratio_measure}
measure_with_unit.value_component]
[{measure_with_unit.unit_component ->
unit

© ISO 2001 – All rights reserved

unit = derived_unit}
measure_with_unit.unit_component]

5.1.4.35.6 operating_temperature

AIM element: [measure_with_unit.value_component]
[measure_with_unit.unit_component]

Source: 41

Reference path: property_definition_relationship
property_definition_relationship.related_property_definition ->
property_definition
represented_definition = property_definition
represented_definition <-
property_definition_representation.definition
property_definition_representation
property_definition_representation.used_representation ->
{representation
representation.name = 'service operating characteristics'}
representation
(representation.items[i] ->
{representation_item
(representation_item.name = 'temperature')
(representation_item.name = 'maximum temperature')
(representation_item.name = 'minimum temperature')})
([representation.items[i] ->
{representation_item
representation_item.name = 'maximum temperature'}]
[representation.items[i] ->
{representation_item
representation_item.name = 'minimum duration'}])
representation_item =>
measure_representation_item <=
{measure_with_unit =>
thermodynamic_temperature_measure_with_unit}
measure_with_unit
[measure_with_unit.value_component]
[measure_with_unit.unit_component]

5.1.4.36 Socket

AIM element: plant_item_connector

Source: 227

Reference path: plant_item_connector <=
shape_aspect
{plant_item_connector
classification_item = plant_item_connector
classification_item <-
applied_classification_assignment.items[i]
applied_classification_assignment <=

© ISO 2001 – All rights reserved

classification_assignment
classification_assignment.assigned_classification ->
[group =>
piping_connector_class]
[group
group.name = 'socket']}

5.1.4.36.1 set_back

AIM element: [measure_with_unit.value_component]
[measure_with_unit.unit_component]

Source: 41

Rules: subtype_mandatory_shape_representation

Reference path: plant_item_connector <=
shape_aspect <-
[shape_aspect_relationship.relating_shape_aspect
{shape_aspect_relationship
shape_aspect_relationship.name = 'connector dimensional aspect'}
shape_aspect_relationship
shape_aspect_relationship.related_shape_aspect ->
shape_aspect <-
shape_aspect_relationship.relating_shape_aspect]
[shape_aspect_relationship.relating_shape_aspect
{shape_aspect_relationship
shape_aspect_relationship.name = 'connector dimensional aspect'}
shape_aspect_relationship
shape_aspect_relationship.related_shape_aspect ->
shape_aspect <-
shape_aspect_relationship.related_shape_aspect]
shape_aspect_relationship =>
dimensional_location
dimensional_characteristic = dimensional_location
dimensional_characteristic <-
dimensional_characteristic_representation.dimension
dimensional_characteristic_representation
dimensional_characteristic_representation.representation ->
shape_dimension_representation <=
shape_representation <=
{representation
representation.name = 'piping connector dimensional shape'}
representation
representation.items[i] ->
{representation_item
representation_item.name = 'set back'}
representation_item =>
measure_representation_item <=
{measure_with_unit =>
length_measure_with_unit}
measure_with_unit
[measure_with_unit.value_component]

© ISO 2001 – All rights reserved

[measure_with_unit.unit_component]

5.1.4.37 Structural_load_connector

AIM element: plant_item_connector

Source: 227

Reference path: plant_item_connector <=
shape_aspect
{plant_item_connector
classification_item = plant_item_connector
classification_item <-
applied_classification_assignment.items[i]
applied_classification_assignment <=
{classification_assignment
classification_assignment.role ->
classification_role
classification_role.name = 'structural connector type classification'}
classification_assignment
classification_assignment.assigned_classification ->
group =>
structural_load_connector_class}

5.1.4.37.1 type

AIM element: group.name

Source: 41

Reference path: plant_item_connector
classification_item = plant_item_connector
classification_item <-
applied_classification_assignment.items[i]
applied_classification_assignment <=
{classification_assignment
classification_assignment.role ->
classification_role
classification_role.name = 'structural connector type classification'}
classification_assignment
classification_assignment.assigned_classification ->
{group =>
structural_load_connector_class}
group
group.name

5.1.4.38 Stub_in

AIM element: plant_item_connector

Source: 227

© ISO 2001 – All rights reserved

Reference path: plant_item_connector <=
shape_aspect
{plant_item_connector
classification_item = plant_item_connector
classification_item <-
applied_classification_assignment.items[i]
applied_classification_assignment <=
classification_assignment
classification_assignment.assigned_classification ->
[group =>
piping_connector_class]
[group
group.name = 'stub in']}

5.1.4.38.1 stub_in_depth

AIM element: [measure_with_unit.value_component]
[measure_with_unit.unit_component]

Source: 41

Rules: subtype_mandatory_shape_representation

Reference path: plant_item_connector <=
shape_aspect <-
[shape_aspect_relationship.relating_shape_aspect
{shape_aspect_relationship
shape_aspect_relationship.name = 'connector dimensional aspect'}
shape_aspect_relationship
shape_aspect_relationship.related_shape_aspect ->
shape_aspect <-
shape_aspect_relationship.relating_shape_aspect]
[shape_aspect_relationship.relating_shape_aspect
{shape_aspect_relationship
shape_aspect_relationship.name = 'connector dimensional aspect'}
shape_aspect_relationship
shape_aspect_relationship.related_shape_aspect ->
shape_aspect <-
shape_aspect_relationship.related_shape_aspect]
shape_aspect_relationship =>
dimensional_location
dimensional_characteristic = dimensional_location
dimensional_characteristic <-
dimensional_characteristic_representation.dimension
dimensional_characteristic_representation
dimensional_characteristic_representation.representation ->
shape_dimension_representation <=
shape_representation <=
{representation
representation.name = 'piping connector dimensional shape'}
representation
representation.items[i] ->
{representation_item
representation_item.name = 'stub in depth'}

© ISO 2001 – All rights reserved

representation_item =>
measure_representation_item <=
{measure_with_unit =>
length_measure_with_unit}
measure_with_unit
[measure_with_unit.value_component]
[measure_with_unit.unit_component]

5.1.4.39 Threaded

AIM element: plant_item_connector

Source: 227

Reference path: plant_item_connector <=
shape_aspect
{plant_item_connector
classification_item = plant_item_connector
classification_item <-
applied_classification_assignment.items[i]
applied_classification_assignment <=
classification_assignment
classification_assignment.assigned_classification ->
[group =>
piping_connector_class]
[group
group.name = 'threaded']}

5.1.4.39.1 thread_engagement_depth

AIM element: [measure_with_unit.value_component]
[measure_with_unit.unit_component]

Source: 41

Rules: subtype_mandatory_shape_representation

Reference path: plant_item_connector <=
shape_aspect <-
[shape_aspect_relationship.relating_shape_aspect
{shape_aspect_relationship
shape_aspect_relationship.name = 'connector dimensional aspect'}
shape_aspect_relationship
shape_aspect_relationship.related_shape_aspect ->
shape_aspect <-
shape_aspect_relationship.relating_shape_aspect]
[shape_aspect_relationship.relating_shape_aspect
{shape_aspect_relationship
shape_aspect_relationship.name = 'connector dimensional aspect'}
shape_aspect_relationship
shape_aspect_relationship.related_shape_aspect ->
shape_aspect <-
shape_aspect_relationship.related_shape_aspect]

© ISO 2001 – All rights reserved

shape_aspect_relationship =>
dimensional_location
dimensional_characteristic = dimensional_location
dimensional_characteristic <-
dimensional_characteristic_representation.dimension
dimensional_characteristic_representation
dimensional_characteristic_representation.representation ->
shape_dimension_representation <=
shape_representation <=
{representation
representation.name = 'piping connector dimensional shape'}
representation
representation.items[i] ->
{representation_item
representation_item.name = 'thread engagement depth'}
representation_item =>
measure_representation_item <=
{measure_with_unit =>
length_measure_with_unit}
measure_with_unit
[measure_with_unit.value_component]
[measure_with_unit.unit_component]

5.1.5 HVAC_component_characterizationUoF

5.1.5.1 Cross_section_flat_oval

AIM element: hvac_cross_section

Source: 227

Reference path: hvac_cross_section <=
shape_aspect
{shape_aspect.description = 'flat oval'}

5.1.5.1.1 height

AIM element: [measure_with_unit.value_component]
[measure_with_unit.unit_component]

Source: 41

Rules: subtype_mandatory_shape_representation

Reference path: hvac_cross_section <=
shape_aspect <-
[shape_aspect_relationship.relating_shape_aspect
{shape_aspect_relationship
shape_aspect_relationship.name = 'cross section dimensional aspect'}
shape_aspect_relationship
shape_aspect_relationship.related_shape_aspect ->
shape_aspect <-
shape_aspect_relationship.relating_shape_aspect]

© ISO 2001 – All rights reserved

[shape_aspect_relationship.relating_shape_aspect
{shape_aspect_relationship
shape_aspect_relationship.name = 'cross section dimensional aspect'}
shape_aspect_relationship
shape_aspect_relationship.related_shape_aspect ->
shape_aspect <-
shape_aspect_relationship.related_shape_aspect]
shape_aspect_relationship =>
dimensional_location
dimensional_characteristic = dimensional_location
dimensional_characteristic <-
dimensional_characteristic_representation.dimension
dimensional_characteristic_representation
dimensional_characteristic_representation.representation ->
shape_dimension_representation <=
shape_representation <=
{representation
representation.name = 'hvac connector dimensional shape'}
representation
representation.items[i] ->
{representation_item
representation_item.name = 'height'}
representation_item =>
measure_representation_item <=
{measure_with_unit =>
length_measure_with_unit}
measure_with_unit
[measure_with_unit.value_component]
[measure_with_unit.unit_component]

5.1.5.1.2 width

AIM element: [measure_with_unit.value_component]
[measure_with_unit.unit_component]

Source: 41

Reference path: hvac_cross_section <=
shape_aspect <-
[shape_aspect_relationship.relating_shape_aspect
{shape_aspect_relationship
shape_aspect_relationship.name = 'cross section dimensional aspect'}
shape_aspect_relationship
shape_aspect_relationship.related_shape_aspect ->
shape_aspect <-
shape_aspect_relationship.relating_shape_aspect]
[shape_aspect_relationship.relating_shape_aspect
{shape_aspect_relationship
shape_aspect_relationship.name = 'cross section dimensional aspect'}
shape_aspect_relationship
shape_aspect_relationship.related_shape_aspect ->
shape_aspect <-
shape_aspect_relationship.related_shape_aspect]
shape_aspect_relationship =>

© ISO 2001 – All rights reserved

dimensional_location
dimensional_characteristic = dimensional_location
dimensional_characteristic <-
dimensional_characteristic_representation.dimension
dimensional_characteristic_representation
dimensional_characteristic_representation.representation ->
shape_dimension_representation <=
shape_representation <=
{representation
representation.name = 'hvac connector dimensional shape'}
representation
representation.items[i] ->
{representation_item
representation_item.name = 'width'}
representation_item =>
measure_representation_item <=
{measure_with_unit =>
length_measure_with_unit}
measure_with_unit
[measure_with_unit.value_component]
[measure_with_unit.unit_component]

5.1.5.2 Cross_section_non_standard

AIM element: hvac_cross_section

Source: 227

Reference path: hvac_cross_section <=
shape_aspect
{shape_aspect.description = 'non standard'}

5.1.5.2.1 closed_bounded_curve

AIM element: curve

Source: 42

Reference path: hvac_cross_section <=
shape_aspect
shape_definition = shape_aspect
shape_definition
characterized_definition = shape_definition
characterized_definition <-
property_definition.definition
property_definition
represented_definition = property_definition
represented_definition <-
property_definition_representation.definition
property_definition_representation
property_definition_representation.used_representation ->
representation
{representation.name = 'cross section representation'}

© ISO 2001 – All rights reserved

representation.items[i] ->
representation_item
{representation_item.name = 'closed bounded curve'}
representation_item =>
geometric_representation_item =>
curve

5.1.5.3 Cross_section_radiused_corner

AIM element: hvac_cross_section

Source: 227

Reference path: hvac_cross_section <=
shape_aspect
{shape_aspect.description = 'radiused corner'}

5.1.5.3.1 height

AIM element: [measure_with_unit.value_component]
[measure_with_unit.unit_component]

Source: 41

Rules: subtype_mandatory_shape_representation

Reference path: hvac_cross_section <=
shape_aspect <-
[shape_aspect_relationship.relating_shape_aspect
{shape_aspect_relationship
shape_aspect_relationship.name = 'cross section dimensional aspect'}
shape_aspect_relationship
shape_aspect_relationship.related_shape_aspect ->
shape_aspect <-
shape_aspect_relationship.relating_shape_aspect]
[shape_aspect_relationship.relating_shape_aspect
{shape_aspect_relationship
shape_aspect_relationship.name = 'cross section dimensional aspect'}
shape_aspect_relationship
shape_aspect_relationship.related_shape_aspect ->
shape_aspect <-
shape_aspect_relationship.related_shape_aspect]
shape_aspect_relationship =>
dimensional_location
dimensional_characteristic = dimensional_location
dimensional_characteristic <-
dimensional_characteristic_representation.dimension
dimensional_characteristic_representation
dimensional_characteristic_representation.representation ->
shape_dimension_representation <=
shape_representation <=
{representation
representation.name = 'hvac connector dimensional shape'}

© ISO 2001 – All rights reserved

representation
representation.items[i] ->
{representation_item
representation_item.name = 'height'}
representation_item =>
measure_representation_item <=
{measure_with_unit =>
length_measure_with_unit}
measure_with_unit
[measure_with_unit.value_component]
[measure_with_unit.unit_component]

5.1.5.3.2 width

AIM element: [measure_with_unit.value_component]
[measure_with_unit.unit_component]

Source: 41

Rules: subtype_mandatory_shape_representation

Reference path: hvac_cross_section <=
shape_aspect <-
[shape_aspect_relationship.relating_shape_aspect
{shape_aspect_relationship
shape_aspect_relationship.name = 'cross section dimensional aspect'}
shape_aspect_relationship
shape_aspect_relationship.related_shape_aspect ->
shape_aspect <-
shape_aspect_relationship.relating_shape_aspect]
[shape_aspect_relationship.relating_shape_aspect
{shape_aspect_relationship
shape_aspect_relationship.name = 'cross section dimensional aspect'}
shape_aspect_relationship
shape_aspect_relationship.related_shape_aspect ->
shape_aspect <-
shape_aspect_relationship.related_shape_aspect]
shape_aspect_relationship =>
dimensional_location
dimensional_characteristic = dimensional_location
dimensional_characteristic <-
dimensional_characteristic_representation.dimension
dimensional_characteristic_representation
dimensional_characteristic_representation.representation ->
shape_dimension_representation <=
shape_representation <=
{representation
representation.name = 'hvac connector dimensional shape'}
representation
representation.items[i] ->
{representation_item
representation_item.name = 'width'}
representation_item =>
measure_representation_item <=

© ISO 2001 – All rights reserved

{measure_with_unit =>
length_measure_with_unit}
measure_with_unit
[measure_with_unit.value_component]
[measure_with_unit.unit_component]

5.1.5.3.3 corner_radius

AIM element: [measure_with_unit.value_component]
[measure_with_unit.unit_component]

Source: 41

Rules: subtype_mandatory_shape_representation

Reference path: hvac_cross_section <=
shape_aspect <-
[shape_aspect_relationship.relating_shape_aspect
{shape_aspect_relationship
shape_aspect_relationship.name = 'cross section dimensional aspect'}
shape_aspect_relationship
shape_aspect_relationship.related_shape_aspect ->
shape_aspect <-
shape_aspect_relationship.relating_shape_aspect]
[shape_aspect_relationship.relating_shape_aspect
{shape_aspect_relationship
shape_aspect_relationship.name = 'cross section dimensional aspect'}
shape_aspect_relationship
shape_aspect_relationship.related_shape_aspect ->
shape_aspect <-
shape_aspect_relationship.related_shape_aspect]
shape_aspect_relationship =>
dimensional_location
dimensional_characteristic = dimensional_location
dimensional_characteristic <-
dimensional_characteristic_representation.dimension
dimensional_characteristic_representation
dimensional_characteristic_representation.representation ->
shape_dimension_representation <=
shape_representation <=
{representation
representation.name = 'hvac connector dimensional shape'}
representation
representation.items[i] ->
{representation_item
representation_item.name = 'corner radius'}
representation_item =>
measure_representation_item <=
{measure_with_unit =>
length_measure_with_unit}
measure_with_unit
[measure_with_unit.value_component]
[measure_with_unit.unit_component]

© ISO 2001 – All rights reserved

5.1.5.4 Cross_section_rectangular

AIM element: hvac_cross_section

Source: 227

Reference path: hvac_cross_section <=
shape_aspect
{shape_aspect.description = 'rectangular'}

5.1.5.4.1 height

AIM element: [measure_with_unit.value_component]
[measure_with_unit.unit_component]

Source: 41

Rules: subtype_mandatory_shape_representation

Reference path: hvac_cross_section <=
shape_aspect <-
[shape_aspect_relationship.relating_shape_aspect
{shape_aspect_relationship
shape_aspect_relationship.name = 'cross section dimensional aspect'}
shape_aspect_relationship
shape_aspect_relationship.related_shape_aspect ->
shape_aspect <-
shape_aspect_relationship.relating_shape_aspect]
[shape_aspect_relationship.relating_shape_aspect
{shape_aspect_relationship
shape_aspect_relationship.name = 'cross section dimensional aspect'}
shape_aspect_relationship
shape_aspect_relationship.related_shape_aspect ->
shape_aspect <-
shape_aspect_relationship.related_shape_aspect]
shape_aspect_relationship =>
dimensional_location
dimensional_characteristic = dimensional_location
dimensional_characteristic <-
dimensional_characteristic_representation.dimension
dimensional_characteristic_representation
dimensional_characteristic_representation.representation ->
shape_dimension_representation <=
shape_representation <=
{representation
representation.name = 'hvac connector dimensional shape'}
representation
representation.items[i] ->
{representation_item
representation_item.name = 'height'}
representation_item =>
measure_representation_item <=
{measure_with_unit =>
length_measure_with_unit}

© ISO 2001 – All rights reserved

measure_with_unit
[measure_with_unit.value_component]
[measure_with_unit.unit_component]

5.1.5.4.2 width

AIM element: [measure_with_unit.value_component]
[measure_with_unit.unit_component]

Source: 41

Rules: subtype_mandatory_shape_representation

Reference path: hvac_cross_section <=
shape_aspect <-
[shape_aspect_relationship.relating_shape_aspect
{shape_aspect_relationship
shape_aspect_relationship.name = 'cross section dimensional aspect'}
shape_aspect_relationship
shape_aspect_relationship.related_shape_aspect ->
shape_aspect <-
shape_aspect_relationship.relating_shape_aspect]
[shape_aspect_relationship.relating_shape_aspect
{shape_aspect_relationship
shape_aspect_relationship.name = 'cross section dimensional aspect'}
shape_aspect_relationship
shape_aspect_relationship.related_shape_aspect ->
shape_aspect <-
shape_aspect_relationship.related_shape_aspect]
shape_aspect_relationship =>
dimensional_location
dimensional_characteristic = dimensional_location
dimensional_characteristic <-
dimensional_characteristic_representation.dimension
dimensional_characteristic_representation
dimensional_characteristic_representation.representation ->
shape_dimension_representation <=
shape_representation <=
{representation
representation.name = 'hvac connector dimensional shape'}
representation
representation.items[i] ->
{representation_item
representation_item.name = 'width'}
representation_item =>
measure_representation_item <=
{measure_with_unit =>
length_measure_with_unit}
measure_with_unit
[measure_with_unit.value_component]
[measure_with_unit.unit_component]

© ISO 2001 – All rights reserved

5.1.5.5 Cross_section_round

AIM element: hvac_cross_section

Source: 227

Reference path: hvac_cross_section <=
shape_aspect
{shape_aspect.description = 'round'}

5.1.5.5.1 radius

AIM element: [measure_with_unit.value_component]
[measure_with_unit.unit_component]

Source: 41

Rules: subtype_mandatory_shape_representation

Reference path: hvac_cross_section <=
shape_aspect <-
[shape_aspect_relationship.relating_shape_aspect
{shape_aspect_relationship
shape_aspect_relationship.name = 'cross section dimensional aspect'}
shape_aspect_relationship
shape_aspect_relationship.related_shape_aspect ->
shape_aspect <-
shape_aspect_relationship.relating_shape_aspect]
[shape_aspect_relationship.relating_shape_aspect
{shape_aspect_relationship
shape_aspect_relationship.name = 'cross section dimensional aspect'}
shape_aspect_relationship
shape_aspect_relationship.related_shape_aspect ->
shape_aspect <-
shape_aspect_relationship.related_shape_aspect]
shape_aspect_relationship =>
dimensional_location
dimensional_characteristic = dimensional_location
dimensional_characteristic <-
dimensional_characteristic_representation.dimension
dimensional_characteristic_representation
dimensional_characteristic_representation.representation ->
shape_dimension_representation <=
shape_representation <=
{representation
representation.name = 'hvac connector dimensional shape'}
representation
representation.items[i] ->
{representation_item
representation_item.name = 'radius'}
representation_item =>
measure_representation_item <=
{measure_with_unit =>
length_measure_with_unit}

© ISO 2001 – All rights reserved

measure_with_unit
[measure_with_unit.value_component]
[measure_with_unit.unit_component]

5.1.5.6 Cross_section_triangular

AIM element: hvac_cross_section

Source: 227

Reference path: hvac_cross_section <=
shape_aspect
{shape_aspect.description = 'triangular'}

5.1.5.6.1 vertex_1

AIM element: cartesian_point

Source: 42

Reference path: hvac_cross_section <=
shape_aspect
shape_definition = shape_aspect
shape_definition
characterized_definition = shape_definition
characterized_definition <-
property_definition.definition
property_definition
represented_definition = property_definition
represented_definition <-
property_definition_representation.definition
property_definition_representation
property_definition_representation.used_representation ->
representation
{representation.name = 'cross section representation'}
representation.items[i] ->
representation_item
{representation_item.name = 'vertex 1'}
representation_item =>
geometric_representation_item =>
point =>
cartesian_point

5.1.5.6.2 vertex_2

AIM element: cartesian_point

Source: 42

Reference path: hvac_cross_section <=
shape_aspect
shape_definition = shape_aspect
shape_definition

© ISO 2001 – All rights reserved

characterized_definition = shape_definition
characterized_definition <-
property_definition.definition
property_definition
represented_definition = property_definition
represented_definition <-
property_definition_representation.definition
property_definition_representation
property_definition_representation.used_representation ->
representation
{representation.name = 'cross section representation'}
representation.items[i] ->
representation_item
{representation_item.name = 'vertex 2'}
representation_item =>
geometric_representation_item =>
point =>
cartesian_point

5.1.5.6.3 vertex_3

AIM element: cartesian_point

Source: 42

Reference path: hvac_cross_section <=
shape_aspect
shape_definition = shape_aspect
shape_definition
characterized_definition = shape_definition
characterized_definition <-
property_definition.definition
property_definition
represented_definition = property_definition
represented_definition <-
property_definition_representation.definition
property_definition_representation
property_definition_representation.used_representation ->
representation
{representation.name = 'cross section representation'}
representation.items[i] ->
representation_item
{representation_item.name = 'vertex 1'}
representation_item =>
geometric_representation_item =>
point =>
cartesian_point

5.1.5.7 Hvac_connector

AIM element: hvac_connector

© ISO 2001 – All rights reserved

Source: 227

Reference path: hvac_connector <=
shape_aspect
{shape_aspect
shape_aspect.product_definitional = TRUE}

5.1.5.7.1 name

AIM element: shape_aspect.name

Source: 41

Reference path: hvac_connector <=
shape_aspect
shape_aspect.name

5.1.5.7.2 hvac_connector_specification

AIM element: document

Source: 41

Reference path: hvac_connector
document_item = hvac_connector
document_item <-
applied_document_reference.items[i]
applied_document_reference <=
document_reference
document_reference.assigned_document ->
{document
document.kind ->
document_type
document_type.product_data_type = 'hvac connector specification'}
document

5.1.5.7.3 hvac_joint_inspection_specification

AIM element: document

Source: 41

Reference path: hvac_connector
document_item = hvac_connector
document_item <-
applied_document_reference.items[i]
applied_document_reference <=
document_reference
document_reference.assigned_document ->
{document
document.kind ->
document_type

© ISO 2001 – All rights reserved

document_type.product_data_type = 'hvac connector inspection specification'}
document

5.1.5.7.4 connector_flow_direction

AIM element: descriptive_representation_item.description

Source: 45

Reference path: hvac_connector <=
shape_aspect
shape_definition = shape_aspect
shape_definition
characterized_definition = shape_definition
characterized_definition <-
property_definition.definition
property_definition
represented_definition = property_definition
represented_definition <-
property_definition_representation.definition
property_definition_representation
property_definition_representation.used_representation ->
representation
{representation.name = 'hvac connector characteristics'}
representation.items[i] ->
{representation_item
representation_item.name = 'flow direction'}
representation_item =>
descriptive_representation_item
descriptive_representation_item.description

5.1.5.7.5 hvac_joint_test_specification

AIM element: document

Source: 41

Reference path: hvac_connector
document_item = hvac_connector
document_item <-
applied_document_reference.items[i]
applied_document_reference <=
document_reference
document_reference.assigned_document ->
{document
document.kind ->
document_type
document_type.product_data_type = 'hvac connector test specification'}
document

© ISO 2001 – All rights reserved

5.1.5.7.6 hvac_joint_engagement_length

AIM element: [measure_with_unit.value_component]
[measure_with_unit.unit_component]

Source: 41

Reference path: hvac_connector <=
shape_aspect
shape_definition = shape_aspect
shape_definition
characterized_definition = shape_definition
characterized_definition <-
property_definition.definition
property_definition
represented_definition = property_definition
represented_definition <-
property_definition_representation.definition
property_definition_representation
property_definition_representation.used_representation ->
representation
representation.items[i] ->
representation_item =>
{representation_item.name = 'engagement length'}
measure_representation_item <=
{measure_with_unit =>
length_measure_with_unit}
measure_with_unit
[measure_with_unit.value_component]
[measure_with_unit.unit_component]

5.1.5.7.7 hvac_joint_joining_type

AIM element: group.name

Source: 41

Reference path: hvac_connector
classification_item = hvac_connector
classification_item <-
applied_classification_assignment.items[i]
applied_classification_assignment <=
{classification_assignment
classification_assignment.role ->
classification_role
classification_role.name = 'hvac joint joining type classification'}
classification_assignment
classification_assignment.assigned_classification ->
group
group.name

© ISO 2001 – All rights reserved

5.1.5.7.8 hvac_joint_sealant_type

AIM element: group.name

Source: 41

Reference path: hvac_connector
classification_item = hvac_connector
classification_item <-
applied_classification_assignment.items[i]
applied_classification_assignment <=
{classification_assignment
classification_assignment.role ->
classification_role
classification_role.name = 'hvac joint sealant type classification'}
classification_assignment
classification_assignment.assigned_classification ->
group
group.name

5.1.5.7.9 hvac_joint_joint_type

AIM element: group.name

Source: 41

Reference path: hvac_connector
classification_item = hvac_connector
classification_item <-
applied_classification_assignment.items[i]
applied_classification_assignment <=
{classification_assignment
classification_assignment.role ->
classification_role
classification_role.name = 'hvac joint type classification'}
classification_assignment
classification_assignment.assigned_classification ->
group
group.name

5.1.5.7.10 hvac_joint_tightness

AIM element: group.name

Source: 41

Reference path: hvac_connector
classification_item = hvac_connector
classification_item <-
applied_classification_assignment.items[i]
applied_classification_assignment <=
{classification_assignment
classification_assignment.role ->

© ISO 2001 – All rights reserved

classification_role
classification_role.name = 'hvac joint tightness classification'}
classification_assignment
classification_assignment.assigned_classification ->
group
group.name

5.1.5.7.11 hvac_connector to hvac_cross_section

AIM element: PATH

Reference path: hvac_connector <=
shape_aspect <-
shape_aspect_relationship.relating_shape_aspect
shape_aspect_relationship
shape_aspect_relationship.related_shape_aspect ->
shape_aspect =>
hvac_cross_section

5.1.5.7.12 hvac_connector to hvac_connector_service_characteristic

AIM element: PATH

Reference path: hvac_connector <=
shape_aspect
shape_definition = shape_aspect
shape_definition
characterized_definition = shape_definition
characterized_definition <-
property_definition.definition
{property_definition
property_definition.name = 'hvac service characteristics'}
property_definition

5.1.5.8 Hvac_connector_service_characteristic

AIM element: property_definition

Source: 41

Reference path: property_definition
{property_definition.name = 'hvac service characteristic'}

5.1.5.8.1 design_pressure

AIM element: [measure_with_unit.value_component]
[measure_with_unit.unit_component]

Source: 41

Reference path: property_definition
represented_definition = property_definition

© ISO 2001 – All rights reserved

represented_definition <-
property_definition_representation.definition
property_definition_representation
property_definition_representation.using_representation ->
representation
{representation.name = 'design service characteristics'}
(representation.items[i] ->
{representation_item
(representation_item.name = 'pressure')
(representation_item.name = 'maximum pressure')
(representation_item.name = 'minimum pressure')})
([representation.items[i] ->
{representation_item
representation_item.name = 'maximum pressure'}]
[representation.items[i] ->
{representation_item
representation_item.name = 'minimum pressure'}])
representation_item =>
measure_representation_item <=
measure_with_unit
[measure_with_unit.value_component]
[measure_with_unit.unit_component]

5.1.5.8.2 design_temperature

AIM element: [measure_with_unit.value_component]
[measure_with_unit.unit_component]

Source: 41

Reference path: property_definition
represented_definition = property_definition
represented_definition <-
property_definition_representation.definition
property_definition_representation
property_definition_representation.using_representation ->
representation
{representation.name = 'design service characteristics'}
(representation.items[i] ->
{representation_item
(representation_item.name = 'temperature')
(representation_item.name = 'maximum temperature')
(representation_item.name = 'minimum temperature')})
([representation.items[i] ->
{representation_item
representation_item.name = 'maximum temperature'}]
[representation.items[i] ->
{representation_item
representation_item.name = 'minimum temperature'}])
representation_item =>
measure_representation_item <=
measure_with_unit
[measure_with_unit.value_component]

© ISO 2001 – All rights reserved

[measure_with_unit.unit_component]

5.1.5.8.3 hvac_connector_service_characteristic to service_operating_-case

AIM element: PATH

Reference path: property_definition <-
property_definition_relationship.related_property_definition
property_definition_relationship

5.1.5.9 Hvac_cross_section

AIM element: hvac_cross_section

Source: 227

Reference path: hvac_cross_section <=
shape_aspect

5.1.5.9.1 equivalent_length

AIM element: [measure_with_unit.value_component]
[measure_with_unit.unit_component]

Source: 41

Rules: subtype_mandatory_shape_representation

Reference path: hvac_cross_section <=
shape_aspect <-
[shape_aspect_relationship.relating_shape_aspect
{shape_aspect_relationship
shape_aspect_relationship.name = 'cross section dimensional aspect'}
shape_aspect_relationship
shape_aspect_relationship.related_shape_aspect ->
shape_aspect <-
shape_aspect_relationship.relating_shape_aspect]
[shape_aspect_relationship.relating_shape_aspect
{shape_aspect_relationship
shape_aspect_relationship.name = 'cross section dimensional aspect'}
shape_aspect_relationship
shape_aspect_relationship.related_shape_aspect ->
shape_aspect <-
shape_aspect_relationship.related_shape_aspect]
shape_aspect_relationship =>
dimensional_location
dimensional_characteristic = dimensional_location
dimensional_characteristic <-
dimensional_characteristic_representation.dimension
dimensional_characteristic_representation
dimensional_characteristic_representation.representation ->
shape_dimension_representation <=

© ISO 2001 – All rights reserved

shape_representation <=
{representation
representation.name = 'hvac connector dimensional shape'}
representation
representation.items[i] ->
{representation_item
representation_item.name = 'equivalent length'}
representation_item =>
measure_representation_item <=
{measure_with_unit =>
length_measure_with_unit}
measure_with_unit
[measure_with_unit.value_component]
[measure_with_unit.unit_component]

5.1.5.10 Hvac_branch_connection

AIM element: hvac_branch_connection

Source: 227

Reference path: hvac_branch_connection <=
shape_aspect_relationship
{shape_aspect_relationship
[shape_aspect_relationship.description = 'branch location']
[shape_aspect_relationship.relating_shape_aspect ->
shape_aspect
shape_aspect.of_shape ->
product_definition_shape <=
property_definition
property_definition.definition ->
characterized_definition
characterized_definition = characterized_product_definition
characterized_product_definition
characterized_product_definition = product_definition
product_definition =>
hvac_section_segment_definition]
[shape_aspect_relationship.related_shape_aspect ->
shape_aspect =>
hvac_section_segment_termination]}

5.1.5.10.1 branch_sequence_id

AIM element: shape_aspect_relationship.name

Source: 41

Reference path: hvac_branch_connection <=
{shape_aspect_relationship
shape_aspect_relationship.relating_shape_aspect ->
shape_aspect
shape_aspect.of_shape ->
product_definition_shape <-

© ISO 2001 – All rights reserved

[shape_aspect.of_shape
shape_aspect
shape_aspect.description = 'termination 1']
[shape_aspect.of_shape
shape_aspect
shape_aspect.description = 'termination 2']}
shape_aspect_relationship
shape_aspect_relationship.name

5.1.5.11 Hvac_plant_item_branch_connector

AIM element: hvac_connector

Source: 227

Reference path: hvac_connector <=
shape_aspect
{shape_aspect
shape_aspect.description = 'hvac plant item branch connector'}

5.1.5.11.1 hvac_plant_item_branch_connector to hvac_plant_item_-branch_connection

AIM element: PATH

Reference path: hvac_connector <=
shape_aspect <-
shape_aspect_relationship.related_shape_aspect
shape_aspect_relationship =>
hvac_plant_item_branch_connection

5.1.5.12 Hvac_plant_item_connector

AIM element: hvac_connector

Source: 227

Reference path: hvac_connector <=
shape_aspect
{shape_aspect
shape_aspect.description = 'hvac plant item connector'}

5.1.5.12.1 hvac_plant_item_connector to hvac_plant_item_connection

AIM element: PATH

Reference path: hvac_connector <=
shape_aspect <-
shape_aspect_relationship.related_shape_aspect
shape_aspect_relationship =>
hvac_plant_item_connection

© ISO 2001 – All rights reserved

5.1.6 HVAC_component_characterization UoF

5.1.6.1 Hvac_access_opening

AIM element: shape_aspect

Source: 41

Reference path: shape_aspect
{shape_aspect.description = 'hvac access opening'}

5.1.6.1.1 shape

AIM element: curve

Source: 42

Reference path: shape_aspect
shape_definition = shape_aspect
shape_definition
characterized_definition = shape_definition
characterized_definition <-
property_definition.definition
property_definition
represented_definition = property_definition
represented_definition <-
property_definition_representation.definition
property_definition_representation
property_definition_representation.used_representation ->
representation
{representation.name = 'hvac access opening representation'}
representation.items[i] ->
representation_item
{representation_item.name = 'hvac access opening shape'}
representation_item =>
geometric_representation_item =>
curve

5.1.6.1.2 access_opening_id

AIM element: shape_aspect.name

Source: 41

5.1.6.1.3 access_type

AIM element: group.name

Source: 41

Reference path: shape_aspect
classification_item = shape_aspect

© ISO 2001 – All rights reserved

classification_item <-
applied_classification_assignment.items[i]
applied_classification_assignment <=
{classification_assignment
classification_assignment.role ->
classification_role
classification_role.name = 'hvac access opening type classification'}
classification_assignment
classification_assignment.assigned_classification ->
group
group.name

5.1.6.2 Hvac_bend

AIM element: hvac_component_definition

Source: 227

Rules: dependent_instantiable_product_context
product_context_discipline_type_constraint
value_for_application_context

Reference path: hvac_component_definition <=
product_definition
{hvac_component_definition
classification_item = hvac_component_definition
classification_item <-
applied_classification_assignment.items[i]
applied_classification_assignment <=
classification_assignment
classification_assignment.assigned_classification ->
[group =>
hvac_fitting_class]
[group
group.name = 'hvac bend']}
{product_definition
product_definition.formation ->
product_definition_formation
product_definition_formation.of_product ->
[product
classification_item = product
classification_item <-
applied_classification_assignment.items[i]
applied_classification_assignment <=
classification_assignment
classification_assignment.assigned_classification ->
(group)
(group <-
group_relationship.related_group
group_relationship
group_relationship.relating_group ->
group)
group.name = 'hvac fitting']

© ISO 2001 – All rights reserved

[product
product.frame_of_reference[i] ->
product_context <=
application_context_element
application_context_element.name = 'plant item']})

5.1.6.2.1 length

AIM element: [measure_with_unit.value_component]
[measure_with_unit.unit_component]

Source: 41

Rules: subtype_mandatory_shape_representation

Reference path: hvac_component_definition <=
product_definition
characterized_product_definition = product_definition
characterized_product_definition
characterized_definition = characterized_product_definition
characterized_definition <-
property_definition.definition
property_definition =>
product_definition_shape <-
shape_aspect.of_shape
[shape_aspect <-
shape_aspect_relationship.relating_shape_aspect]
[shape_aspect <-
shape_aspect_relationship.related_shape_aspect]
shape_aspect_relationship =>
dimensional_location
dimensional_characteristic = dimensional_location
dimensional_characteristic <-
dimensional_characteristic_representation.dimension
dimensional_characteristic_representation
dimensional_characteristic_representation.representation ->
shape_dimension_representation <=
shape_representation <=
{representation
representation.name = 'hvac bend dimensional shape'}
representation
representation.items[i] ->
representation_item =>
{representation_item.name = 'length'}
measure_representation_item <=
{measure_with_unit =>
length_measure_with_unit}
measure_with_unit
[measure_with_unit.value_component]
[measure_with_unit.unit_component]

5.1.6.2.2 bend_path

© ISO 2001 – All rights reserved

AIM element: curve

Source: 42

Reference path: hvac_component_definition <=
product_definition
characterized_product_definition = product_definition
characterized_product_definition
characterized_definition = characterized_product_definition
characterized_definition <-
property_definition.definition
property_definition =>
product_definition_shape <-
shape_aspect.of_shape
shape_aspect
{shape_aspect.name = 'bend path'}
shape_definition = shape_aspect
shape_definition
characterized_definition = shape_definition
characterized_definition <-
property_definition.definition
property_definition
represented_definition = property_definition
represented_definition <-
property_definition_representation.definition
property_definition_representation
property_definition_representation.used_representation ->
representation
{representation.name = 'hvac bend representation'}
representation.items[i] ->
representation_item
{representation_item.name = 'bend path'}
representation_item =>
geometric_representation_item =>
curve

5.1.6.2.3 end_1_connector

AIM element: hvac_connector

Source: 227

Reference path: hvac_component_definition <=
product_definition
characterized_product_definition = product_definition
characterized_product_definition
characterized_definition = characterized_product_definition
characterized_definition <-
property_definition.definition
property_definition =>
product_definition_shape <-
shape_aspect.of_shape
{shape_aspect
shape_aspect.description = 'end 1'}

© ISO 2001 – All rights reserved

shape_aspect =>
hvac_connector

5.1.6.2.4 end_2_connector

AIM element: hvac_connector

Source: 227

Reference path: hvac_component_definition <=
product_definition
characterized_product_definition = product_definition
characterized_product_definition
characterized_definition = characterized_product_definition
characterized_definition <-
property_definition.definition
property_definition =>
product_definition_shape <-
shape_aspect.of_shape
{shape_aspect
shape_aspect.description = 'end 2'}
shape_aspect =>
hvac_connector

5.1.6.3 Hvac_component

AIM element: product

Source: 41

Rules: dependent_instantiable_product_context
product_context_discipline_type_constraint
value_for_application_context

Reference path: {[product
classification_item = product
classification_item <-
applied_classification_assignment.items[i]
applied_classification_assignment <=
classification_assignment
classification_assignment.assigned_classification ->
group
group.name = 'hvac component']
[product
product.frame_of_reference[i] ->
product_context<=
application_context_element
application_context_element.name = 'plant item']}

© ISO 2001 – All rights reserved

5.1.6.3.1 design_flow_rate

AIM element: [measure_with_unit.value_component]
[measure_with_unit.unit_component]

Source: 41

Reference path: product <-
product_definition_formation.of_product
product_definition_formation <-
product_definition.formation
product_definition
characterized_product_definition = product_definition
characterized_product_definition
characterized_definition = characterized_product_definition
characterized_definition <-
property_definition.definition
property_definition <-
property_definition_representation.definition
property_definition_representation
property_definition_representation.using_representation ->
representation
{representation.name = 'hvac flow characteristics'}
(representation.items[i] ->
{representation_item
(representation_item.name = 'flow rate')
(representation_item.name = 'maximum flow rate')
(representation_item.name = 'minimum flow rate')})
([representation.items[i] ->
{representation_item
representation_item.name = 'maximum flow rate'}]
[representation.items[i] ->
{representation_item
representation_item.name = 'minimum flow rate'}])
representation_item =>
measure_representation_item <=
measure_with_unit
[measure_with_unit.value_component]
[measure_with_unit.unit_component]

5.1.6.3.2 design_flow_condition

AIM element: descriptive_representation_item.description

Source: 45

Reference path: product <-
product_definition_formation.of_product
product_definition_formation <-
product_definition.formation
product_definition
characterized_product_definition = product_definition
characterized_product_definition
characterized_definition = characterized_product_definition

© ISO 2001 – All rights reserved

characterized_definition <-
property_definition.definition
property_definition <-
property_definition_representation.definition
property_definition_representation
property_definition_representation.using_representation ->
representation
{representation.name = 'hvac flow characteristics'}
representation.items[i] ->
representation_item
{representation_item.name = 'design flow condition')
representation_item =>
descriptive_representation_item
descriptive_representation_item.description

5.1.6.3.3 design_pressure

AIM element: [measure_with_unit.value_component]
[measure_with_unit.unit_component]

Source: 41

Reference path: product <-
product_definition_formation.of_product
product_definition_formation <-
product_definition.formation
product_definition
characterized_product_definition = product_definition
characterized_product_definition
characterized_definition = characterized_product_definition
characterized_definition <-
property_definition.definition
property_definition <-
represented_definition = property_definition
represented_definition <-
property_definition_representation.definition
property_definition_representation
property_definition_representation.using_representation ->
representation
{representation.name = 'hvac flow characteristics'}
(representation.items[i] ->
{representation_item
(representation_item.name = 'pressure')
(representation_item.name = 'maximum pressure')
(representation_item.name = 'minimum pressure')})
([representation.items[i] ->
{representation_item
representation_item.name = 'maximum pressure'}]
[representation.items[i] ->
{representation_item
representation_item.name = 'minimum pressure'}])
representation_item =>
measure_representation_item <=
measure_with_unit

© ISO 2001 – All rights reserved

[measure_with_unit.value_component]
[measure_with_unit.unit_component]

5.1.6.3.4 design_temperature

AIM element: [measure_with_unit.value_component]
[measure_with_unit.unit_component]

Source: 41

Reference path: product <-
product_definition_formation.of_product
product_definition_formation <-
product_definition.formation
product_definition
characterized_product_definition = product_definition
characterized_product_definition
characterized_definition = characterized_product_definition
characterized_definition <-
property_definition.definition
property_definition <-
represented_definition = property_definition
represented_definition <-
property_definition_representation.definition
property_definition_representation
property_definition_representation.using_representation ->
representation
{representation.name = 'hvac flow characteristics'}
(representation.items[i] ->
{representation_item
(representation_item.name = 'temperature')
(representation_item.name = 'maximum temperature')
(representation_item.name = 'minimum temperature')})
([representation.items[i] ->
{representation_item
representation_item.name = 'maximum temperature'}]
[representation.items[i] ->
{representation_item
representation_item.name = 'minimum temperature'}])
representation_item =>
measure_representation_item <=
measure_with_unit
[measure_with_unit.value_component]
[measure_with_unit.unit_component]

5.1.6.3.5 pressure_loss_coefficient

AIM element: [measure_with_unit.value_component]
[measure_with_unit.unit_component]

Source: 41

Reference path: product <-

© ISO 2001 – All rights reserved

product_definition_formation.of_product
product_definition_formation <-
product_definition.formation
product_definition
characterized_product_definition = product_definition
characterized_product_definition
characterized_definition = characterized_product_definition
characterized_definition <-
property_definition.definition
property_definition <-
represented_definition = property_definition
represented_definition <-
property_definition_representation.definition
property_definition_representation
property_definition_representation.using_representation ->
representation
{representation.name = 'hvac flow characteristics'}
(representation.items[i] ->
{representation_item
(representation_item.name = 'pressure loss coefficient')
(representation_item.name = 'maximum pressure loss coefficient')
(representation_item.name = 'minimum pressure loss coefficient')})
([representation.items[i] ->
{representation_item
representation_item.name = 'maximum pressure loss coefficient'}]
[representation.items[i] ->
{representation_item
representation_item.name = 'minimum pressure loss coefficient'}])
representation_item =>
measure_representation_item <=
measure_with_unit
[measure_with_unit.value_component]
[measure_with_unit.unit_component]

5.1.6.3.6 pressure_drop

AIM element: [measure_with_unit.value_component]
[measure_with_unit.unit_component]

Source: 41

Reference path: product <-
product_definition_formation.of_product
product_definition_formation <-
product_definition.formation
product_definition
characterized_product_definition = product_definition
characterized_product_definition
characterized_definition = characterized_product_definition
characterized_definition <-
property_definition.definition
property_definition <-
represented_definition = property_definition
represented_definition <-

© ISO 2001 – All rights reserved

property_definition_representation.definition
property_definition_representation
property_definition_representation.using_representation ->
representation
{representation.name = 'hvac flow characteristics'}
(representation.items[i] ->
{representation_item
(representation_item.name = 'pressure drop')
(representation_item.name = 'maximum pressure drop')
(representation_item.name = 'minimum pressure drop')})
([representation.items[i] ->
{representation_item
representation_item.name = 'maximum pressure drop'}]
[representation.items[i] ->
{representation_item
representation_item.name = 'minimum pressure drop'}])
representation_item =>
measure_representation_item <=
measure_with_unit
[measure_with_unit.value_component]
[measure_with_unit.unit_component]

5.1.6.3.7 velocity

AIM element: [measure_with_unit.value_component]
[measure_with_unit.unit_component]

Source: 41

Reference path: product <-
product_definition_formation.of_product
product_definition_formation <-
product_definition.formation
product_definition
characterized_product_definition = product_definition
characterized_product_definition
characterized_definition = characterized_product_definition
characterized_definition <-
property_definition.definition
property_definition <-
represented_definition = property_definition
represented_definition <-
property_definition_representation.definition
property_definition_representation
property_definition_representation.using_representation ->
representation
{representation.name = 'hvac flow characteristics'}
(representation.items[i] ->
{representation_item
(representation_item.name = 'velocity')
(representation_item.name = 'maximum velocity')
(representation_item.name = 'minimum velocity')})
([representation.items[i] ->
{representation_item

© ISO 2001 – All rights reserved

representation_item.name = 'maximum velocity'}]
[representation.items[i] ->
{representation_item
representation_item.name = 'minimum velocity'}])
representation_item =>
measure_representation_item <=
measure_with_unit
[measure_with_unit.value_component]
[measure_with_unit.unit_component]

5.1.6.3.8 hvac_component to hvac_component_thickness

AIM element: PATH

Reference path: product <-
product_definition_formation.of_product
product_definition_formation <-
product_definition.formation
product_definition
characterized_product_definition = product_definition
characterized_product_definition
characterized_definition = characterized_product_definition
characterized_definition <-
property_definition.definition
property_definition <-
property_definition_representation.definition
property_definition_representation
property_definition_representation.using_representation ->
representation
{representation.name = 'hvac component thickness'}

5.1.6.3.9 hvac_component to hvac_access_opening

AIM element: PATH

Reference path: product <-
product_definition_formation.of_product
product_definition_formation <-
product_definition.formation
product_definition
characterized_product_definition = product_definition
characterized_product_definition
characterized_definition = characterized_product_definition
characterized_definition <-
property_definition.definition
property_definition =>
product_definition_shape <-
shape_aspect.of_shape
shape_aspect

5.1.6.4 Hvac_component_thickness

© ISO 2001 – All rights reserved

AIM element: representation

Source: 43

Reference path: representation
{representation.name = 'hvac component thickness'}

5.1.6.4.1 sheet_metal_thickness

AIM element: [measure_with_unit.value_component]
[measure_with_unit.unit_component]

Source: 41

Reference path: representation
{representation.name = 'hvac component_thickness'}
(representation.items[i] ->
{representation_item
(representation_item.name = 'thickness')
(representation_item.name = 'maximum thickness')
(representation_item.name = 'minimum thickness')})
([representation.items[i] ->
{representation_item
representation_item.name = 'maximum thickness'}]
[representation.items[i] ->
{representation_item
representation_item.name = 'minimum thickness'}])
representation_item =>
measure_representation_item <=
{measure_with_unit =>
length_measure_with_unit}
measure_with_unit
[measure_with_unit.value_component]
[measure_with_unit.unit_component]

5.1.6.4.2 thickness_type

AIM element: descriptive_representation_item

Source: 45

Reference path: representation
{representation.name = 'hvac component_thickness'}
representation.items[i] ->
representation_item
{representation_item.name = 'thickness type')
representation_item =>
descriptive_representation_item
descriptive_representation_item.description

5.1.6.5 Hvac_coupling

© ISO 2001 – All rights reserved

AIM element: hvac_component_definition

Source: 227

Rules: dependent_instantiable_product_context
product_context_discipline_type_constraint
value_for_application_context

Reference path: hvac_component_definition <=
product_definition
{hvac_component_definition
classification_item = hvac_component_definition
classification_item <-
applied_classification_assignment.items[i]
applied_classification_assignment <=
classification_assignment
classification_assignment.assigned_classification ->
[group =>
hvac_fitting_class]
[group
group.name = 'hvac coupling']}
{product_definition
product_definition.formation ->
product_definition_formation
product_definition_formation.of_product ->
[product
classification_item = product
classification_item <-
applied_classification_assignment.items[i]
applied_classification_assignment <=
classification_assignment
classification_assignment.assigned_classification ->
(group)
(group <-
group_relationship.related_group
group_relationship
group_relationship.relating_group ->
group)
group.name = 'hvac fitting']
[product
product.frame_of_reference[i] ->
product_context <=
application_context_element
application_context_element.name = 'plant item']})

5.1.6.5.1 offset_x

AIM element: [measure_with_unit.value_component]
[measure_with_unit.unit_component]

Source: 41

© ISO 2001 – All rights reserved

Rules: subtype_mandatory_shape_representation

Reference path: hvac_component_definition <=
product_definition
characterized_product_definition = product_definition
characterized_product_definition
characterized_definition = characterized_product_definition
characterized_definition <-
property_definition.definition
property_definition =>
product_definition_shape <-
shape_aspect.of_shape
[shape_aspect <-
shape_aspect_relationship.relating_shape_aspect]
[shape_aspect <-
shape_aspect_relationship.related_shape_aspect]
shape_aspect_relationship =>
dimensional_location
dimensional_characteristic = dimensional_location
dimensional_characteristic <-
dimensional_characteristic_representation.dimension
dimensional_characteristic_representation
dimensional_characteristic_representation.representation ->
shape_dimension_representation <=
shape_representation <=
{representation
representation.name = 'hvac coupling dimensional shape'}
representation
representation.items[i] ->
representation_item =>
{representation_item.name = 'offset x'}
measure_representation_item <=
{measure_with_unit =>
length_measure_with_unit}
measure_with_unit
[measure_with_unit.value_component]
[measure_with_unit.unit_component]

5.1.6.5.2 offset_y

AIM element: [measure_with_unit.value_component]
[measure_with_unit.unit_component]

Source: 41

Rules: subtype_mandatory_shape_representation

Reference path: hvac_component_definition <=
product_definition
characterized_product_definition = product_definition
characterized_product_definition
characterized_definition = characterized_product_definition
characterized_definition <-
property_definition.definition

© ISO 2001 – All rights reserved

property_definition =>
product_definition_shape <-
shape_aspect.of_shape
[shape_aspect <-
shape_aspect_relationship.relating_shape_aspect]
[shape_aspect <-
shape_aspect_relationship.related_shape_aspect]
shape_aspect_relationship =>
dimensional_location
dimensional_characteristic = dimensional_location
dimensional_characteristic <-
dimensional_characteristic_representation.dimension
dimensional_characteristic_representation
dimensional_characteristic_representation.representation ->
shape_dimension_representation <=
shape_representation <=
{representation
representation.name = 'hvac coupling dimensional shape'}
representation
representation.items[i] ->
representation_item =>
{representation_item.name = 'offset y'}
measure_representation_item <=
{measure_with_unit =>
length_measure_with_unit}
measure_with_unit
[measure_with_unit.value_component]
[measure_with_unit.unit_component]

5.1.6.5.3 length

AIM element: [measure_with_unit.value_component]
[measure_with_unit.unit_component]

Source: 41

Rules: subtype_mandatory_shape_representation

Reference path: hvac_component_definition <=
product_definition
characterized_product_definition = product_definition
characterized_product_definition
characterized_definition = characterized_product_definition
characterized_definition <-
property_definition.definition
property_definition =>
product_definition_shape <-
shape_aspect.of_shape
[shape_aspect <-
shape_aspect_relationship.relating_shape_aspect]
[shape_aspect <-
shape_aspect_relationship.related_shape_aspect]
shape_aspect_relationship =>
dimensional_location

© ISO 2001 – All rights reserved

dimensional_characteristic = dimensional_location
dimensional_characteristic <-
dimensional_characteristic_representation.dimension
dimensional_characteristic_representation
dimensional_characteristic_representation.representation ->
shape_dimension_representation <=
shape_representation <=
{representation
representation.name = 'hvac coupling dimensional shape'}
representation
representation.items[i] ->
representation_item =>
{representation_item.name = 'length'}
measure_representation_item <=
{measure_with_unit =>
length_measure_with_unit}
measure_with_unit
[measure_with_unit.value_component]
[measure_with_unit.unit_component]

5.1.6.5.4 end_1_connector

AIM element: hvac_connector

Source: 227

Reference path: hvac_component_definition <=
product_definition
characterized_product_definition = product_definition
characterized_product_definition
characterized_definition = characterized_product_definition
characterized_definition <-
property_definition.definition
property_definition =>
product_definition_shape <-
shape_aspect.of_shape
{shape_aspect
shape_aspect.description = 'end 1'}
shape_aspect =>
hvac_connector

5.1.6.5.5 end_2_connector

AIM element: hvac_connector

Source: 227

Reference path: hvac_component_definition <=
product_definition
characterized_product_definition = product_definition
characterized_product_definition
characterized_definition = characterized_product_definition
characterized_definition <-

© ISO 2001 – All rights reserved

property_definition.definition
property_definition =>
product_definition_shape <-
shape_aspect.of_shape
{shape_aspect
shape_aspect.description = 'end 2'}
shape_aspect =>
hvac_connector

5.1.6.6 Hvac_ducting

AIM element: product

Source: 41

Rules: dependent_instantiable_product_context
product_context_discipline_type_constraint
value_for_application_context

Reference path: {[product
classification_item = product
classification_item <-
applied_classification_assignment.items[i]
applied_classification_assignment <=
classification_assignment
classification_assignment.assigned_classification ->
[group
group.name = 'hvac ducting']
[group <-
group_relationship.related_group
{group_relationship
group_relationship.name = 'usage classification'}
group_relationship
group_relationship.relating_group ->
group
group.name = 'ducting component']
[group <-
group_relationship.related_group
{group_relationship
group_relationship.name = 'usage_classification'}
group_relationship
group_relationship.relating_group ->
group
group.name = 'hvac component']]
[product
product.frame_of_reference[i] ->
product_context<=
application_context_element
application_context_element.name = 'plant item']}

5.1.6.6.1 duct_seam

© ISO 2001 – All rights reserved

AIM element: descriptive_representation_item.description

Source: 45

Reference path: product <-
product_definition_formation.of_product
product_definition_formation <-
product_definition.formation
product_definition
characterized_product_definition = product_definition
characterized_product_definition
characterized_definition = characterized_product_definition
characterized_definition <-
property_definition.definition
property_definition
represented_definition = property_definition
represented_definition <-
property_definition_representation.definition
property_definition_representation
property_definition_representation.used_representation ->
representation
{representation.name = 'hvac ducting characteristics'}
representation.items[i] ->
{representation_item
representation_item.name = 'duct seam'}
representation_item =>
descriptive_representation_item
descriptive_representation_item.description

5.1.6.6.2 length

AIM element: [measure_with_unit.value_component]
[measure_with_unit.unit_component]

Source: 41

Reference path: product <-
product_definition_formation.of_product
product_definition_formation <-
product_definition.formation
product_definition
characterized_product_definition = product_definition
characterized_product_definition
characterized_definition = characterized_product_definition
characterized_definition <-
property_definition.definition
property_definition =>
product_definition_shape <-
shape_aspect.of_shape
[shape_aspect <-
shape_aspect_relationship.relating_shape_aspect]
[shape_aspect <-
shape_aspect_relationship.related_shape_aspect]
shape_aspect_relationship =>

© ISO 2001 – All rights reserved

dimensional_location
dimensional_characteristic = dimensional_location
dimensional_characteristic <-
dimensional_characteristic_representation.dimension
dimensional_characteristic_representation
dimensional_characteristic_representation.representation ->
shape_dimension_representation <=
shape_representation <=
{representation
representation.name = 'hvac ducting dimensional shape'}
representation
representation.items[i] ->
representation_item =>
{representation_item.name = 'length'}
measure_representation_item <=
{measure_with_unit =>
length_measure_with_unit}
measure_with_unit
[measure_with_unit.value_component]
[measure_with_unit.unit_component]

5.1.6.6.3 end_1_connector

AIM element: hvac_connector

Source: 227

Reference path: product <-
product_definition_formation.of_product
product_definition_formation <-
product_definition.formation
product_definition
characterized_product_definition = product_definition
characterized_product_definition
characterized_definition = characterized_product_definition
characterized_definition <-
property_definition.definition
property_definition =>
product_definition_shape <-
shape_aspect.of_shape
{shape_aspect
shape_aspect.description = 'end 1'}
shape_aspect =>
hvac_connector

5.1.6.6.4 end_2_connector

AIM element: hvac_connector

Source: 227

Reference path: product <-
product_definition_formation.of_product

© ISO 2001 – All rights reserved

product_definition_formation <-
product_definition.formation
product_definition
characterized_product_definition = product_definition
characterized_product_definition
characterized_definition = characterized_product_definition
characterized_definition <-
property_definition.definition
property_definition =>
product_definition_shape <-
shape_aspect.of_shape
{shape_aspect
shape_aspect.description = 'end 2'}
shape_aspect =>
hvac_connector

5.1.6.6.5 duct_path

AIM element: curve

Source: 42

Reference path: product <-
product_definition_formation.of_product
product_definition_formation <-
product_definition.formation
product_definition
characterized_product_definition = product_definition
characterized_product_definition
characterized_definition = characterized_product_definition
characterized_definition <-
property_definition.definition
property_definition =>
product_definition_shape <-
shape_aspect.of_shape
shape_aspect
{shape_aspect.name = 'duct path'}
shape_definition = shape_aspect
shape_definition
characterized_definition = shape_definition
characterized_definition <-
property_definition.definition
property_definition
represented_definition = property_definition
represented_definition <-
property_definition_representation.definition
property_definition_representation
property_definition_representation.used_representation ->
representation
{representation.name = 'duct path representation'}
representation.items[i] ->
representation_item
{representation_item.name = 'duct path'}
representation_item =>

© ISO 2001 – All rights reserved

geometric_representation_item =>
curve

5.1.6.7 Hvac_elbow_90deg_reducing

AIM element: hvac_component_definition

Source: 227

Rules: dependent_instantiable_product_context
product_context_discipline_type_constraint
value_for_application_context

Reference path: hvac_component_definition <=
product_definition
{hvac_component_definition
classification_item = hvac_component_definition
classification_item <-
applied_classification_assignment.items[i]
applied_classification_assignment <=
classification_assignment
classification_assignment.assigned_classification ->
[group =>
hvac_fitting_class]
[group
group.name = 'hvac elbow 90deg reducing']}
{product_definition
product_definition.formation ->
product_definition_formation
product_definition_formation.of_product ->
[product
classification_item = product
classification_item <-
applied_classification_assignment.items[i]
applied_classification_assignment <=
classification_assignment
classification_assignment.assigned_classification ->
(group)
(group <-
group_relationship.related_group
group_relationship
group_relationship.relating_group ->
group)
group.name = 'hvac fitting']
[product
product.frame_of_reference[i] ->
product_context <=
application_context_element
application_context_element.name = 'plant item']})

5.1.6.7.1 angle

© ISO 2001 – All rights reserved

AIM element: [measure_with_unit.value_component]
[measure_with_unit.unit_component]

Source: 41

Rules: subtype_mandatory_shape_representation

Reference path: hvac_component_definition <=
product_definition
characterized_product_definition = product_definition
characterized_product_definition
characterized_definition = characterized_product_definition
characterized_definition <-
property_definition.definition
property_definition =>
product_definition_shape <-
shape_aspect.of_shape
[shape_aspect <-
shape_aspect_relationship.relating_shape_aspect]
[shape_aspect <-
shape_aspect_relationship.related_shape_aspect]
shape_aspect_relationship =>
dimensional_location
dimensional_characteristic = dimensional_location
dimensional_characteristic <-
dimensional_characteristic_representation.dimension
dimensional_characteristic_representation
dimensional_characteristic_representation.representation ->
shape_dimension_representation <=
shape_representation <=
{representation
representation.name = 'hvac elbow dimensional shape'}
representation
representation.items[i] ->
representation_item =>
{representation_item.name = 'angle'}
measure_representation_item <=
{measure_with_unit =>
plane_angle_measure_with_unit}
measure_with_unit
[measure_with_unit.value_component]
[measure_with_unit.unit_component]

5.1.6.7.2 throat_radius

AIM element: [measure_with_unit.value_component]
[measure_with_unit.unit_component]

Source: 41

Rules: subtype_mandatory_shape_representation

Reference path: hvac_component_definition <=
product_definition

© ISO 2001 – All rights reserved

characterized_product_definition = product_definition
characterized_product_definition
characterized_definition = characterized_product_definition
characterized_definition <-
property_definition.definition
property_definition =>
product_definition_shape <-
shape_aspect.of_shape
[shape_aspect <-
shape_aspect_relationship.relating_shape_aspect]
[shape_aspect <-
shape_aspect_relationship.related_shape_aspect]
shape_aspect_relationship =>
dimensional_location
dimensional_characteristic = dimensional_location
dimensional_characteristic <-
dimensional_characteristic_representation.dimension
dimensional_characteristic_representation
dimensional_characteristic_representation.representation ->
shape_dimension_representation <=
shape_representation <=
{representation
representation.name = 'hvac elbow dimensional shape'}
representation
representation.items[i] ->
representation_item =>
{representation_item.name = 'throat radius'}
measure_representation_item <=
{measure_with_unit =>
length_measure_with_unit}
measure_with_unit
[measure_with_unit.value_component]
[measure_with_unit.unit_component]

5.1.6.7.3 heel_radius

AIM element: [measure_with_unit.value_component]
[measure_with_unit.unit_component]

Source: 41

Rules: subtype_mandatory_shape_representation

Reference path: hvac_component_definition <=
product_definition
characterized_product_definition = product_definition
characterized_product_definition
characterized_definition = characterized_product_definition
characterized_definition <-
property_definition.definition
property_definition =>
product_definition_shape <-
shape_aspect.of_shape
[shape_aspect <-

© ISO 2001 – All rights reserved

shape_aspect_relationship.relating_shape_aspect]
[shape_aspect <-
shape_aspect_relationship.related_shape_aspect]
shape_aspect_relationship =>
dimensional_location
dimensional_characteristic = dimensional_location
dimensional_characteristic <-
dimensional_characteristic_representation.dimension
dimensional_characteristic_representation
dimensional_characteristic_representation.representation ->
shape_dimension_representation <=
shape_representation <=
{representation
representation.name = 'hvac elbow dimensional shape'}
representation
representation.items[i] ->
representation_item =>
{representation_item.name = 'heel radius'}
measure_representation_item <=
{measure_with_unit =>
length_measure_with_unit}
measure_with_unit
[measure_with_unit.value_component]
[measure_with_unit.unit_component]

5.1.6.7.4 heel_radius_centre_offset

AIM element: [measure_with_unit.value_component]
[measure_with_unit.unit_component]

Source: 41

Rules: subtype_mandatory_shape_representation

Reference path: hvac_component_definition <=
product_definition
characterized_product_definition = product_definition
characterized_product_definition
characterized_definition = characterized_product_definition
characterized_definition <-
property_definition.definition
property_definition =>
product_definition_shape <-
shape_aspect.of_shape
[shape_aspect <-
shape_aspect_relationship.relating_shape_aspect]
[shape_aspect <-
shape_aspect_relationship.related_shape_aspect]
shape_aspect_relationship =>
dimensional_location
dimensional_characteristic = dimensional_location
dimensional_characteristic <-
dimensional_characteristic_representation.dimension
dimensional_characteristic_representation

© ISO 2001 – All rights reserved

dimensional_characteristic_representation.representation ->
shape_dimension_representation <=
shape_representation <=
{representation
representation.name = 'hvac elbow dimensional shape'}
representation
representation.items[i] ->
representation_item =>
{representation_item.name = 'radius centre offset'}
measure_representation_item <=
{measure_with_unit =>
length_measure_with_unit}
measure_with_unit
[measure_with_unit.value_component]
[measure_with_unit.unit_component]

5.1.6.7.5 end_1_connector

AIM element: hvac_connector

Source: 227

Reference path: hvac_component_definition <=
product_definition
characterized_product_definition = product_definition
characterized_product_definition
characterized_definition = characterized_product_definition
characterized_definition <-
property_definition.definition
property_definition =>
product_definition_shape <-
shape_aspect.of_shape
{shape_aspect
shape_aspect.description = 'end 1'}
shape_aspect =>
hvac_connector

5.1.6.7.6 end_2_connector

AIM element: hvac_connector

Source: 227

Reference path: hvac_component_definition <=
product_definition
characterized_product_definition = product_definition
characterized_product_definition
characterized_definition = characterized_product_definition
characterized_definition <-
property_definition.definition
property_definition =>
product_definition_shape <-
shape_aspect.of_shape

© ISO 2001 – All rights reserved

{shape_aspect
shape_aspect.description = 'end 2'}
shape_aspect =>
hvac_connector

5.1.6.7.7 hvac_elbow_90deg_reducing to splitter

AIM element: PATH

Reference path: hvac_component_definition <=
product_definition
characterized_product_definition = product_definition
characterized_product_definition
characterized_definition = characterized_product_definition
characterized_definition <-
property_definition.definition
property_definition =>
product_definition_shape <-
shape_aspect.of_shape
shape_aspect
{shape_aspect.description = 'splitter'}

5.1.6.8 Hvac_elbow_centred

AIM element: hvac_component_definition

Source: 227

Rules: dependent_instantiable_product_context
product_context_discipline_type_constraint
value_for_application_context

Reference path: hvac_component_definition <=
product_definition
{hvac_component_definition
classification_item = hvac_component_definition
classification_item <-
applied_classification_assignment.items[i]
applied_classification_assignment <=
classification_assignment
classification_assignment.assigned_classification ->
[group =>
hvac_fitting_class]
[group
group.name = 'hvac elbow centred']}
{product_definition
product_definition.formation ->
product_definition_formation
product_definition_formation.of_product ->
[product
classification_item = product
classification_item <-

© ISO 2001 – All rights reserved

applied_classification_assignment.items[i]
applied_classification_assignment <=
classification_assignment
classification_assignment.assigned_classification ->
(group)
(group <-
group_relationship.related_group
group_relationship
group_relationship.relating_group ->
group)
group.name = 'hvac fitting']
[product
product.frame_of_reference[i] ->
product_context <=
application_context_element
application_context_element.name = 'plant item']})

5.1.6.8.1 angle

AIM element: [measure_with_unit.value_component]
[measure_with_unit.unit_component]

Source: 41

Rules: subtype_mandatory_shape_representation

Reference path: hvac_component_definition <=
product_definition
characterized_product_definition = product_definition
characterized_product_definition
characterized_definition = characterized_product_definition
characterized_definition <-
property_definition.definition
property_definition =>
product_definition_shape <-
shape_aspect.of_shape
[shape_aspect <-
shape_aspect_relationship.relating_shape_aspect]
[shape_aspect <-
shape_aspect_relationship.related_shape_aspect]
shape_aspect_relationship =>
dimensional_location
dimensional_characteristic = dimensional_location
dimensional_characteristic <-
dimensional_characteristic_representation.dimension
dimensional_characteristic_representation
dimensional_characteristic_representation.representation ->
shape_dimension_representation <=
shape_representation <=
{representation
representation.name = 'hvac elbow dimensional shape'}
representation
representation.items[i] ->
representation_item =>

© ISO 2001 – All rights reserved

{representation_item.name = 'angle'}
measure_representation_item <=
{measure_with_unit =>
plane_angle_measure_with_unit}
measure_with_unit
[measure_with_unit.value_component]
[measure_with_unit.unit_component]

5.1.6.8.2 width

AIM element: [measure_with_unit.value_component]
[measure_with_unit.unit_component]

Source: 41

Rules: subtype_mandatory_shape_representation

Reference path: hvac_component_definition <=
product_definition
characterized_product_definition = product_definition
characterized_product_definition
characterized_definition = characterized_product_definition
characterized_definition <-
property_definition.definition
property_definition =>
product_definition_shape <-
shape_aspect.of_shape
[shape_aspect <-
shape_aspect_relationship.relating_shape_aspect]
[shape_aspect <-
shape_aspect_relationship.related_shape_aspect]
shape_aspect_relationship =>
dimensional_location
dimensional_characteristic = dimensional_location
dimensional_characteristic <-
dimensional_characteristic_representation.dimension
dimensional_characteristic_representation
dimensional_characteristic_representation.representation ->
shape_dimension_representation <=
shape_representation <=
{representation
representation.name = 'hvac elbow dimensional shape'}
representation
representation.items[i] ->
representation_item =>
{representation_item.name = 'width'}
measure_representation_item <=
{measure_with_unit =>
length_measure_with_unit}
measure_with_unit
[measure_with_unit.value_component]
[measure_with_unit.unit_component]

© ISO 2001 – All rights reserved

5.1.6.8.3 height

AIM element: [measure_with_unit.value_component]
[measure_with_unit.unit_component]

Source: 41

Rules: subtype_mandatory_shape_representation

Reference path: hvac_component_definition <=
product_definition
characterized_product_definition = product_definition
characterized_product_definition
characterized_definition = characterized_product_definition
characterized_definition <-
property_definition.definition
property_definition =>
product_definition_shape <-
shape_aspect.of_shape
[shape_aspect <-
shape_aspect_relationship.relating_shape_aspect]
[shape_aspect <-
shape_aspect_relationship.related_shape_aspect]
shape_aspect_relationship =>
dimensional_location
dimensional_characteristic = dimensional_location
dimensional_characteristic <-
dimensional_characteristic_representation.dimension
dimensional_characteristic_representation
dimensional_characteristic_representation.representation ->
shape_dimension_representation <=
shape_representation <=
{representation
representation.name = 'hvac elbow dimensional shape'}
representation
representation.items[i] ->
representation_item =>
{representation_item.name = 'height'}
measure_representation_item <=
{measure_with_unit =>
length_measure_with_unit}
measure_with_unit
[measure_with_unit.value_component]
[measure_with_unit.unit_component]

5.1.6.8.4 throat_radius

AIM element: [measure_with_unit.value_component]
[measure_with_unit.unit_component]

Source: 41

Rules: subtype_mandatory_shape_representation

© ISO 2001 – All rights reserved

Reference path: hvac_component_definition <=
product_definition
characterized_product_definition = product_definition
characterized_product_definition
characterized_definition = characterized_product_definition
characterized_definition <-
property_definition.definition
property_definition =>
product_definition_shape <-
shape_aspect.of_shape
[shape_aspect <-
shape_aspect_relationship.relating_shape_aspect]
[shape_aspect <-
shape_aspect_relationship.related_shape_aspect]
shape_aspect_relationship =>
dimensional_location
dimensional_characteristic = dimensional_location
dimensional_characteristic <-
dimensional_characteristic_representation.dimension
dimensional_characteristic_representation
dimensional_characteristic_representation.representation ->
shape_dimension_representation <=
shape_representation <=
{representation
representation.name = 'hvac elbow dimensional shape'}
representation
representation.items[i] ->
representation_item =>
{representation_item.name = 'throat radius'}
measure_representation_item <=
{measure_with_unit =>
length_measure_with_unit}
measure_with_unit
[measure_with_unit.value_component]
[measure_with_unit.unit_component]

5.1.6.8.5 heel_radius

AIM element: [measure_with_unit.value_component]
[measure_with_unit.unit_component]

Source: 41

Rules: subtype_mandatory_shape_representation

Reference path: hvac_component_definition <=
product_definition
characterized_product_definition = product_definition
characterized_product_definition
characterized_definition = characterized_product_definition
characterized_definition <-
property_definition.definition
property_definition =>
product_definition_shape <-

© ISO 2001 – All rights reserved

shape_aspect.of_shape
[shape_aspect <-
shape_aspect_relationship.relating_shape_aspect]
[shape_aspect <-
shape_aspect_relationship.related_shape_aspect]
shape_aspect_relationship =>
dimensional_location
dimensional_characteristic = dimensional_location
dimensional_characteristic <-
dimensional_characteristic_representation.dimension
dimensional_characteristic_representation
dimensional_characteristic_representation.representation ->
shape_dimension_representation <=
shape_representation <=
{representation
representation.name = 'hvac elbow dimensional shape'}
representation
representation.items[i] ->
representation_item =>
{representation_item.name = 'heel radius'}
measure_representation_item <=
{measure_with_unit =>
length_measure_with_unit}
measure_with_unit
[measure_with_unit.value_component]
[measure_with_unit.unit_component]

5.1.6.8.6 end_1_connector

AIM element: hvac_connector

Source: 227

Reference path: hvac_component_definition <=
product_definition
characterized_product_definition = product_definition
characterized_product_definition
characterized_definition = characterized_product_definition
characterized_definition <-
property_definition.definition
property_definition =>
product_definition_shape <-
shape_aspect.of_shape
{shape_aspect
shape_aspect.description = 'end 1'}
shape_aspect =>
hvac_connector

5.1.6.8.7 end_2_connector

AIM element: hvac_connector

© ISO 2001 – All rights reserved

Source: 227

Reference path: hvac_component_definition <=
product_definition
characterized_product_definition = product_definition
characterized_product_definition
characterized_definition = characterized_product_definition
characterized_definition <-
property_definition.definition
property_definition =>
product_definition_shape <-
shape_aspect.of_shape
{shape_aspect
shape_aspect.description = 'end 2'}
shape_aspect =>
hvac_connector

5.1.6.8.8 hvac_elbow_centred to splitter

AIM element: PATH

Reference path: hvac_component_definition <=
product_definition
characterized_product_definition = product_definition
characterized_product_definition
characterized_definition = characterized_product_definition
characterized_definition <-
property_definition.definition
property_definition =>
product_definition_shape <-
shape_aspect.of_shape
shape_aspect
{shape_aspect.description = 'splitter'}

5.1.6.9 Hvac_elbow_mitre

AIM element: hvac_component_definition

Source: 227

Rules: dependent_instantiable_product_context
product_context_discipline_type_constraint
value_for_application_context

Reference path: hvac_component_definition <=
product_definition
{hvac_component_definition
classification_item = hvac_component_definition
classification_item <-
applied_classification_assignment.items[i]
applied_classification_assignment <=
classification_assignment

© ISO 2001 – All rights reserved

classification_assignment.assigned_classification ->
[group =>
hvac_fitting_class]
[group
group.name = 'hvac elbow mitre']}
{product_definition
product_definition.formation ->
product_definition_formation
product_definition_formation.of_product ->
[product
classification_item = product
classification_item <-
applied_classification_assignment.items[i]
applied_classification_assignment <=
classification_assignment
classification_assignment.assigned_classification ->
(group)
(group <-
group_relationship.related_group
group_relationship
group_relationship.relating_group ->
group)
group.name = 'hvac fitting']
[product
product.frame_of_reference[i] ->
product_context <=
application_context_element
application_context_element.name = 'plant item']})

5.1.6.9.1 angle_first_section

AIM element: [measure_with_unit.value_component]
[measure_with_unit.unit_component]

Source: 41

Rules: subtype_mandatory_shape_representation

Reference path: hvac_component_definition <=
product_definition
characterized_product_definition = product_definition
characterized_product_definition
characterized_definition = characterized_product_definition
characterized_definition <-
property_definition.definition
property_definition =>
product_definition_shape <-
shape_aspect.of_shape
[shape_aspect <-
shape_aspect_relationship.relating_shape_aspect]
[shape_aspect <-
shape_aspect_relationship.related_shape_aspect]
shape_aspect_relationship =>
dimensional_location

© ISO 2001 – All rights reserved

dimensional_characteristic = dimensional_location
dimensional_characteristic <-
dimensional_characteristic_representation.dimension
dimensional_characteristic_representation
dimensional_characteristic_representation.representation ->
shape_dimension_representation <=
shape_representation <=
{representation
representation.name = 'hvac elbow dimensional shape'}
representation
representation.items[i] ->
representation_item =>
{representation_item.name = 'angle first section'}
measure_representation_item <=
{measure_with_unit =>
plane_angle_measure_with_unit}
measure_with_unit
[measure_with_unit.value_component]
[measure_with_unit.unit_component]

5.1.6.9.2 angle_last_section

AIM element: [measure_with_unit.value_component]
[measure_with_unit.unit_component]

Source: 41

Rules: subtype_mandatory_shape_representation

Reference path: hvac_component_definition <=
product_definition
characterized_product_definition = product_definition
characterized_product_definition
characterized_definition = characterized_product_definition
characterized_definition <-
property_definition.definition
property_definition =>
product_definition_shape <-
shape_aspect.of_shape
[shape_aspect <-
shape_aspect_relationship.relating_shape_aspect]
[shape_aspect <-
shape_aspect_relationship.related_shape_aspect]
shape_aspect_relationship =>
dimensional_location
dimensional_characteristic = dimensional_location
dimensional_characteristic <-
dimensional_characteristic_representation.dimension
dimensional_characteristic_representation
dimensional_characteristic_representation.representation ->
shape_dimension_representation <=
shape_representation <=
{representation
representation.name = 'hvac elbow dimensional shape'}

© ISO 2001 – All rights reserved

representation
representation.items[i] ->
representation_item =>
{representation_item.name = 'angle last section'}
measure_representation_item <=
{measure_with_unit =>
plane_angle_measure_with_unit}
measure_with_unit
[measure_with_unit.value_component]
[measure_with_unit.unit_component]

5.1.6.9.3 number_of_sections

AIM element: [measure_with_unit.value_component]
[measure_with_unit.unit_component]

Reference path: hvac_component_definition <=
product_definition
characterized_product_definition = product_definition
characterized_product_definition
characterized_definition = characterized_product_definition
characterized_definition <-
property_definition.definition
property_definition
represented_definition = property_definition
represented_definition <-
property_definition_representation.definition
property_definition_representation
property_definition_representation.used_representation ->
{representation
representation.name = 'hvac elbow characteristics'}
representation
{representation_item
representation_item.name = 'number of sections'}
representation_item =>
measure_representation_item <=
measure_with_unit
[measure_with_unit.value_component
{measure_with_unit.value_component ->
measure_value
measure_value = count_measure}]
[measure_with_unit.unit_component]

5.1.6.9.4 offset

AIM element: [measure_with_unit.value_component]
[measure_with_unit.unit_component]

Source: 41

Rules: subtype_mandatory_shape_representation

Reference path: hvac_component_definition <=

© ISO 2001 – All rights reserved

product_definition
characterized_product_definition = product_definition
characterized_product_definition
characterized_definition = characterized_product_definition
characterized_definition <-
property_definition.definition
property_definition =>
product_definition_shape <-
shape_aspect.of_shape
[shape_aspect <-
shape_aspect_relationship.relating_shape_aspect]
[shape_aspect <-
shape_aspect_relationship.related_shape_aspect]
shape_aspect_relationship =>
dimensional_location
dimensional_characteristic = dimensional_location
dimensional_characteristic <-
dimensional_characteristic_representation.dimension
dimensional_characteristic_representation
dimensional_characteristic_representation.representation ->
shape_dimension_representation <=
shape_representation <=
{representation
representation.name = 'hvac elbow dimensional shape'}
representation
representation.items[i] ->
representation_item =>
{representation_item.name = 'offset'}
measure_representation_item <=
{measure_with_unit =>
length_measure_with_unit}
measure_with_unit
[measure_with_unit.value_component]
[measure_with_unit.unit_component]

5.1.6.9.5 length

AIM element: [measure_with_unit.value_component]
[measure_with_unit.unit_component]

Source: 41

Rules: subtype_mandatory_shape_representation

Reference path: hvac_component_definition <=
product_definition
characterized_product_definition = product_definition
characterized_product_definition
characterized_definition = characterized_product_definition
characterized_definition <-
property_definition.definition
property_definition =>
product_definition_shape <-
shape_aspect.of_shape

© ISO 2001 – All rights reserved

[shape_aspect <-
shape_aspect_relationship.relating_shape_aspect]
[shape_aspect <-
shape_aspect_relationship.related_shape_aspect]
shape_aspect_relationship =>
dimensional_location
dimensional_characteristic = dimensional_location
dimensional_characteristic <-
dimensional_characteristic_representation.dimension
dimensional_characteristic_representation
dimensional_characteristic_representation.representation ->
shape_dimension_representation <=
shape_representation <=
{representation
representation.name = 'hvac elbow dimensional shape'}
representation
representation.items[i] ->
representation_item =>
{representation_item.name = 'length'}
measure_representation_item <=
{measure_with_unit =>
length_measure_with_unit}
measure_with_unit
[measure_with_unit.value_component]
[measure_with_unit.unit_component]

5.1.6.9.6 throat_radius

AIM element: [measure_with_unit.value_component]
[measure_with_unit.unit_component]

Source: 41

Rules: subtype_mandatory_shape_representation

Reference path: hvac_component_definition <=
product_definition
characterized_product_definition = product_definition
characterized_product_definition
characterized_definition = characterized_product_definition
characterized_definition <-
property_definition.definition
property_definition =>
product_definition_shape <-
shape_aspect.of_shape
[shape_aspect <-
shape_aspect_relationship.relating_shape_aspect]
[shape_aspect <-
shape_aspect_relationship.related_shape_aspect]
shape_aspect_relationship =>
dimensional_location
dimensional_characteristic = dimensional_location
dimensional_characteristic <-
dimensional_characteristic_representation.dimension

© ISO 2001 – All rights reserved

dimensional_characteristic_representation
dimensional_characteristic_representation.representation ->
shape_dimension_representation <=
shape_representation <=
{representation
representation.name = 'hvac elbow dimensional shape'}
representation
representation.items[i] ->
representation_item =>
{representation_item.name = 'throat radius'}
measure_representation_item <=
{measure_with_unit =>
length_measure_with_unit}
measure_with_unit
[measure_with_unit.value_component]
[measure_with_unit.unit_component]

5.1.6.9.7 heel_radius

AIM element: [measure_with_unit.value_component]
[measure_with_unit.unit_component]

Source: 41

Rules: subtype_mandatory_shape_representation

Reference path: hvac_component_definition <=
product_definition
characterized_product_definition = product_definition
characterized_product_definition
characterized_definition = characterized_product_definition
characterized_definition <-
property_definition.definition
property_definition =>
product_definition_shape <-
shape_aspect.of_shape
[shape_aspect <-
shape_aspect_relationship.relating_shape_aspect]
[shape_aspect <-
shape_aspect_relationship.related_shape_aspect]
shape_aspect_relationship =>
dimensional_location
dimensional_characteristic = dimensional_location
dimensional_characteristic <-
dimensional_characteristic_representation.dimension
dimensional_characteristic_representation
dimensional_characteristic_representation.representation ->
shape_dimension_representation <=
shape_representation <=
{representation
representation.name = 'hvac elbow dimensional shape'}
representation
representation.items[i] ->
representation_item =>

© ISO 2001 – All rights reserved

{representation_item.name = 'heel radius'}
measure_representation_item <=
{measure_with_unit =>
length_measure_with_unit}
measure_with_unit
[measure_with_unit.value_component]
[measure_with_unit.unit_component]

5.1.6.9.8 end_1_connector

AIM element: hvac_connector

Source: 227

Reference path: hvac_component_definition <=
product_definition
characterized_product_definition = product_definition
characterized_product_definition
characterized_definition = characterized_product_definition
characterized_definition <-
property_definition.definition
property_definition =>
product_definition_shape <-
shape_aspect.of_shape
{shape_aspect
shape_aspect.description = 'end 1'}
shape_aspect =>
hvac_connector

5.1.6.9.9 end_2_connector

AIM element: hvac_connector

Source: 227

Reference path: hvac_component_definition <=
product_definition
characterized_product_definition = product_definition
characterized_product_definition
characterized_definition = characterized_product_definition
characterized_definition <-
property_definition.definition
property_definition =>
product_definition_shape <-
shape_aspect.of_shape
{shape_aspect
shape_aspect.description = 'end 2'}
shape_aspect =>
hvac_connector

© ISO 2001 – All rights reserved

5.1.6.9.10 sweep_angle

AIM element: [measure_with_unit.value_component]
[measure_with_unit.unit_component]

Source: 41

Rules: subtype_mandatory_shape_representation

Reference path: hvac_component_definition <=
product_definition
characterized_product_definition = product_definition
characterized_product_definition
characterized_definition = characterized_product_definition
characterized_definition <-
property_definition.definition
property_definition =>
product_definition_shape <-
shape_aspect.of_shape
[shape_aspect <-
shape_aspect_relationship.relating_shape_aspect]
[shape_aspect <-
shape_aspect_relationship.related_shape_aspect]
shape_aspect_relationship =>
dimensional_location
dimensional_characteristic = dimensional_location
dimensional_characteristic <-
dimensional_characteristic_representation.dimension
dimensional_characteristic_representation
dimensional_characteristic_representation.representation ->
shape_dimension_representation <=
shape_representation <=
{representation
representation.name = 'hvac elbow dimensional shape'}
representation
representation.items[i] ->
representation_item =>
{representation_item.name = 'sweep_angle'}
measure_representation_item <=
{measure_with_unit =>
plane_angle_measure_with_unit}
measure_with_unit
[measure_with_unit.value_component]
[measure_with_unit.unit_component]

5.1.6.9.11 hvac_elbow_mitre to splitter

AIM element: PATH

Reference path: hvac_component_definition <=
product_definition
characterized_product_definition = product_definition
characterized_product_definition
characterized_definition = characterized_product_definition

© ISO 2001 – All rights reserved

characterized_definition <-
property_definition.definition
property_definition =>
product_definition_shape <-
shape_aspect.of_shape
shape_aspect
{shape_aspect.description = 'splitter'}

5.1.6.10 Hvac_end_fitting

AIM element: hvac_component_definition

Source: 227

Rules: dependent_instantiable_product_context
product_context_discipline_type_constraint
value_for_application_context

Reference path: hvac_component_definition <=
product_definition
{hvac_component_definition
classification_item = hvac_component_definition
classification_item <-
applied_classification_assignment.items[i]
applied_classification_assignment <=
classification_assignment
classification_assignment.assigned_classification ->
[group =>
hvac_fitting_class]
[group
group.name = 'hvac end fitting']}
{product_definition
product_definition.formation ->
product_definition_formation
product_definition_formation.of_product ->
[product
classification_item = product
classification_item <-
applied_classification_assignment.items[i]
applied_classification_assignment <=
classification_assignment
classification_assignment.assigned_classification ->
(group)
(group <-
group_relationship.related_group
group_relationship
group_relationship.relating_group ->
group)
group.name = 'hvac fitting']
[product
product.frame_of_reference[i] ->
product_context <=

© ISO 2001 – All rights reserved

application_context_element
application_context_element.name = 'plant item']})

5.1.6.10.1 opening_type

AIM element: group.name

Source: 41

Reference path: shape_aspect
classification_item = shape_aspect
classification_item <-
applied_classification_assignment.items[i]
applied_classification_assignment <=
{classification_assignment
classification_assignment.role ->
classification_role
classification_role.name = 'hvac end fitting opening type classification'}
classification_assignment
classification_assignment.assigned_classification ->
group
group.name

5.1.6.10.2 end_1_connector

AIM element: hvac_connector

Source: 227

Reference path: hvac_component_definition <=
product_definition
characterized_product_definition = product_definition
characterized_product_definition
characterized_definition = characterized_product_definition
characterized_definition <-
property_definition.definition
property_definition =>
product_definition_shape <-
shape_aspect.of_shape
{shape_aspect
shape_aspect.description = 'end 1'}
shape_aspect =>
hvac_connector

5.1.6.11 Hvac_equipment

AIM element: product

Source: 41

Rules: dependent_instantiable_product_context
product_context_discipline_type_constraint
value_for_application_context

© ISO 2001 – All rights reserved

Reference path: {[product
classification_item = product
classification_item <-
applied_classification_assignment.items[i]
applied_classification_assignment <=
classification_assignment
classification_assignment.assigned_classification ->
[group
group.name = 'hvac equipment']
[group <-
group_relationship.related_group
{group_relationship
group_relationship.name = 'usage classification'}
group_relationship
group_relationship.relating_group ->
group
group.name = 'hvac component']]
[product
product.frame_of_reference[i] ->
product_context<=
application_context_element
application_context_element.name = 'plant item']}

5.1.6.11.1 hvac_equipment to hvac_flow_control_device

AIM element: PATH

Reference path: product <-
product_definition_formation.of_product
product_definition_formation <-
product_definition.formation
product_definition <-
product_definition_relationship.relating_product_definition
product_definition_relationship
{product_definition_relationship.name = 'flow control'}
product_definition_relationship.related_product_definition ->
product_definition
product_definition.formation ->
product_definition_formation
product_definition_formation.of_product ->
product

5.1.6.12 Hvac_fitting

AIM element: product

Source: 41

Rules: dependent_instantiable_product_context
product_context_discipline_type_constraint
value_for_application_context

© ISO 2001 – All rights reserved

Reference path: {[product
classification_item = product
classification_item <-
applied_classification_assignment.items[i]
applied_classification_assignment <=
classification_assignment
classification_assignment.assigned_classification ->
[group
group.name = 'hvac fitting']
[group <-
group_relationship.related_group
{group_relationship
group_relationship.name = 'usage classification'}
group_relationship
group_relationship.relating_group ->
group
group.name = 'hvac component']]
[product
product.frame_of_reference[i] ->
product_context <=
application_context_element
application_context_element.name = 'plant item']}

5.1.6.13 Hvac_flow_control_device

AIM element: product

Source: 41

Rules: dependent_instantiable_product_context
product_context_discipline_type_constraint
value_for_application_context

Reference path: {[product
classification_item = product
classification_item <-
applied_classification_assignment.items[i]
applied_classification_assignment <=
classification_assignment
classification_assignment.assigned_classification ->
[group
group.name = 'hvac flow control device']
[group <-
group_relationship.related_group
{group_relationship
group_relationship.name = 'usage classification'}
group_relationship
group_relationship.relating_group ->
group
group.name = 'hvac component']]
[product

© ISO 2001 – All rights reserved

product.frame_of_reference[i] ->
product_context <=
application_context_element
application_context_element.name = 'plant item']}

5.1.6.13.1 flow_control_device_id

AIM element: product.id

Source: 41

5.1.6.13.2 control_device_type

AIM element: group.name

Source: 41

Reference path: product
classification_item = product
classification_item <-
applied_classification_assignment.items[i]
applied_classification_assignment <=
{classification_assignment
classification_assignment.role ->
classification_role
classification_role.name = 'hvac access opening type classification'}
classification_assignment
classification_assignment.assigned_classification ->
group
group.name

5.1.6.13.3 end_1_connector

AIM element: hvac_connector

Source: 227

Reference path: product <-
product_definition_formation.of_product
product_definition_formation <-
product_definition.formation
product_definition
characterized_product_definition = product_definition
characterized_product_definition
characterized_definition = characterized_product_definition
characterized_definition <-
property_definition.definition
property_definition =>
product_definition_shape <-
shape_aspect.of_shape
{shape_aspect
shape_aspect.description = 'end 1'}

© ISO 2001 – All rights reserved

shape_aspect =>
hvac_connector

5.1.6.13.4 end_2_connector

AIM element: hvac_connector

Source: 227

Reference path: product <-
product_definition_formation.of_product
product_definition_formation <-
product_definition.formation
product_definition
characterized_product_definition = product_definition
characterized_product_definition
characterized_definition = characterized_product_definition
characterized_definition <-
property_definition.definition
property_definition =>
product_definition_shape <-
shape_aspect.of_shape
{shape_aspect
shape_aspect.description = 'end 2'}
shape_aspect =>
hvac_connector

5.1.6.13.5 control_point_units

AIM element: measure_with_unit.unit_component

Source: 41

Reference path: product <-
product_definition_formation.of_product
product_definition_formation <-
product_definition.formation
product_definition
characterized_product_definition = product_definition
characterized_product_definition
characterized_definition = characterized_product_definition
characterized_definition <-
property_definition.definition
property_definition <-
property_definition_representation.definition
property_definition_representation
property_definition_representation.using_representation ->
representation
{representation.name = 'flow control device characteristics'}
representation.items[i] ->
representation_item =>
{(representation_item.name = 'control point nominal value')
(representation_item.name = 'control point maximum value')

© ISO 2001 – All rights reserved

(representation_item.name = 'control point minimum value')
(representation_item.name = 'control point set point value')}
measure_representation_item <=
measure_with_unit
measure_with_unit.unit_component

5.1.6.13.6 control_point_nominal_value

AIM element: measure_with_unit.value_component

Source: 41

Reference path: product <-
product_definition_formation.of_product
product_definition_formation <-
product_definition.formation
product_definition
characterized_product_definition = product_definition
characterized_product_definition
characterized_definition = characterized_product_definition
characterized_definition <-
property_definition.definition
property_definition <-
property_definition_representation.definition
property_definition_representation
property_definition_representation.using_representation ->
representation
{representation.name = 'flow control device characteristics'}
representation.items[i] ->
representation_item =>
{representation_item.name = 'control point nominal value'}
measure_representation_item <=
measure_with_unit
measure_with_unit.value_component

5.1.6.13.7 control_point_min_value

AIM element: measure_with_unit.value_component

Source: 41

Reference path: product <-
product_definition_formation.of_product
product_definition_formation <-
product_definition.formation
product_definition
characterized_product_definition = product_definition
characterized_product_definition
characterized_definition = characterized_product_definition
characterized_definition <-
property_definition.definition
property_definition <-
property_definition_representation.definition

© ISO 2001 – All rights reserved

property_definition_representation
property_definition_representation.using_representation ->
representation
{representation.name = 'flow control device characteristics'}
representation.items[i] ->
representation_item =>
{representation_item.name = 'control point minimum value'}
measure_representation_item <=
measure_with_unit
measure_with_unit.value_component

5.1.6.13.8 control_point_max_value

AIM element: measure_with_unit.value_component

Source: 41

Reference path: product <-
product_definition_formation.of_product
product_definition_formation <-
product_definition.formation
product_definition
characterized_product_definition = product_definition
characterized_product_definition
characterized_definition = characterized_product_definition
characterized_definition <-
property_definition.definition
property_definition <-
property_definition_representation.definition
property_definition_representation
property_definition_representation.using_representation ->
representation
{representation.name = 'flow control device characteristics'}
representation.items[i] ->
representation_item =>
{representation_item.name = 'control point maximum value'}
measure_representation_item <=
measure_with_unit
measure_with_unit.value_component

5.1.6.13.9 control_point_set_point_value

AIM element: measure_with_unit.value_component

Source: 41

Reference path: product <-
product_definition_formation.of_product
product_definition_formation <-
product_definition.formation
product_definition
characterized_product_definition = product_definition
characterized_product_definition

© ISO 2001 – All rights reserved

characterized_definition = characterized_product_definition
characterized_definition <-
property_definition.definition
property_definition <-
property_definition_representation.definition
property_definition_representation
property_definition_representation.using_representation ->
representation
{representation.name = 'flow control device characteristics'}
representation.items[i] ->
representation_item =>
{representation_item.name = 'control point set point value'}
measure_representation_item <=
measure_with_unit
measure_with_unit.value_component

5.1.6.14 Hvac_gasket

AIM element: hvac_component_definition

Source: 227

Rules: dependent_instantiable_product_context
product_context_discipline_type_constraint
value_for_application_context

Reference path: hvac_component_definition <=
product_definition
{hvac_component_definition
classification_item = hvac_component_definition
classification_item <-
applied_classification_assignment.items[i]
applied_classification_assignment <=
classification_assignment
classification_assignment.assigned_classification ->
[group =>
hvac_fitting_class]
[group
group.name = 'hvac gasket']}
{product_definition
product_definition.formation ->
product_definition_formation
product_definition_formation.of_product ->
[product
classification_item = product
classification_item <-
applied_classification_assignment.items[i]
applied_classification_assignment <=
classification_assignment
classification_assignment.assigned_classification ->
(group)
(group <-
group_relationship.related_group

© ISO 2001 – All rights reserved

group_relationship
group_relationship.relating_group ->
group)
group.name = 'hvac fitting']
[product
product.frame_of_reference[i] ->
product_context <=
application_context_element
application_context_element.name = 'plant item']})

5.1.6.14.1 gasket_thickness

AIM element: [measure_with_unit.value_component]
[measure_with_unit.unit_component]

Source: 41

Rules: subtype_mandatory_shape_representation

Reference path: hvac_component_definition <=
product_definition
characterized_product_definition = product_definition
characterized_product_definition
characterized_definition = characterized_product_definition
characterized_definition <-
property_definition.definition
property_definition =>
product_definition_shape <-
shape_aspect.of_shape
[shape_aspect <-
shape_aspect_relationship.relating_shape_aspect]
[shape_aspect <-
shape_aspect_relationship.related_shape_aspect]
shape_aspect_relationship =>
dimensional_location
dimensional_characteristic = dimensional_location
dimensional_characteristic <-
dimensional_characteristic_representation.dimension
dimensional_characteristic_representation
dimensional_characteristic_representation.representation ->
shape_dimension_representation <=
shape_representation <=
{representation
representation.name = 'hvac gasket dimensional shape'}
representation
representation.items[i] ->
representation_item =>
{representation_item.name = 'thickness'}
measure_representation_item <=
{measure_with_unit =>
length_measure_with_unit}
measure_with_unit
[measure_with_unit.value_component]

© ISO 2001 – All rights reserved

[measure_with_unit.unit_component]

5.1.6.14.2 end_1_connector

AIM element: hvac_connector

Source: 227

Reference path: hvac_component_definition <=
product_definition
characterized_product_definition = product_definition
characterized_product_definition
characterized_definition = characterized_product_definition
characterized_definition <-
property_definition.definition
property_definition =>
product_definition_shape <-
shape_aspect.of_shape
{shape_aspect
shape_aspect.description = 'end 1'}
shape_aspect =>
hvac_connector

5.1.6.14.3 end_2_connector

AIM element: hvac_connector

Source: 227

Reference path: hvac_component_definition <=
product_definition
characterized_product_definition = product_definition
characterized_product_definition
characterized_definition = characterized_product_definition
characterized_definition <-
property_definition.definition
property_definition =>
product_definition_shape <-
shape_aspect.of_shape
{shape_aspect
shape_aspect.description = 'end 2'}
shape_aspect =>
hvac_connector

5.1.6.15 Hvac_instrument

AIM element: product

Source: 41

Rules: dependent_instantiable_product_context
product_context_discipline_type_constraint
value_for_application_context

© ISO 2001 – All rights reserved

Reference path: {[product
classification_item = product
classification_item <-
applied_classification_assignment.items[i]
applied_classification_assignment <=
classification_assignment
classification_assignment.assigned_classification ->
[group
group.name = 'hvac instrument']
[group <-
group_relationship.related_group
{group_relationship
group_relationship.name = 'usage classification'}
group_relationship
group_relationship.relating_group ->
group
group.name = 'hvac component']]
[product
product.frame_of_reference[i] ->
product_context <=
application_context_element
application_context_element.name = 'plant item']}

5.1.6.15.1 instrument_id

AIM element: product.id

Source: 41

5.1.6.15.2 units

AIM element: measure_with_unit.unit_component

Source: 41

Reference path: product <-
product_definition_formation.of_product
product_definition_formation <-
product_definition.formation
product_definition
characterized_product_definition = product_definition
characterized_product_definition
characterized_definition = characterized_product_definition
characterized_definition <-
property_definition.definition
property_definition <-
property_definition_representation.definition
property_definition_representation
property_definition_representation.using_representation ->
representation
{representation.name = 'hvac instrument characteristics'}

© ISO 2001 – All rights reserved

representation.items[i] ->
representation_item =>
{(representation_item.name = 'low range')
(representation_item.name = 'high range')
(representation_item.name = 'low alarm')
(representation_item.name = 'high alarm')}
measure_representation_item <=
measure_with_unit
measure_with_unit.unit_component

5.1.6.15.3 low_range

AIM element: measure_with_unit.value_component

Source: 41

Reference path: product <-
product_definition_formation.of_product
product_definition_formation <-
product_definition.formation
product_definition
characterized_product_definition = product_definition
characterized_product_definition
characterized_definition = characterized_product_definition
characterized_definition <-
property_definition.definition
property_definition <-
property_definition_representation.definition
property_definition_representation
property_definition_representation.using_representation ->
representation
{representation.name = 'hvac instrument characteristics'}
representation.items[i] ->
representation_item =>
{representation_item.name = 'low range'}
measure_representation_item <=
measure_with_unit
measure_with_unit.value_component

5.1.6.15.4 high_range

AIM element: measure_with_unit.value_component

Source: 41

Reference path: product <-
product_definition_formation.of_product
product_definition_formation <-
product_definition.formation
product_definition
characterized_product_definition = product_definition
characterized_product_definition
characterized_definition = characterized_product_definition

© ISO 2001 – All rights reserved

characterized_definition <-
property_definition.definition
property_definition <-
property_definition_representation.definition
property_definition_representation
property_definition_representation.using_representation ->
representation
{representation.name = 'hvac instrument characteristics'}
representation.items[i] ->
representation_item =>
{representation_item.name = 'high range'}
measure_representation_item <=
measure_with_unit
measure_with_unit.value_component

5.1.6.15.5 type

AIM element: descriptive_representation_item.description

Source: 45

Reference path: product <-
product_definition_formation.of_product
product_definition_formation <-
product_definition.formation
product_definition
characterized_product_definition = product_definition
characterized_product_definition
characterized_definition = characterized_product_definition
characterized_definition <-
property_definition.definition
property_definition
represented_definition = property_definition
represented_definition <-
property_definition_representation.definition
property_definition_representation
property_definition_representation.used_representation ->
representation
{representation.name = 'hvac instrument characteristics'}
representation.items[i] ->
{representation_item
representation_item.name = 'type'}
representation_item =>
descriptive_representation_item
descriptive_representation_item.description

5.1.6.15.6 parameter_measured

AIM element: descriptive_representation_item.description

Source: 45

Reference path: product <-

© ISO 2001 – All rights reserved

product_definition_formation.of_product
product_definition_formation <-
product_definition.formation
product_definition
characterized_product_definition = product_definition
characterized_product_definition
characterized_definition = characterized_product_definition
characterized_definition <-
property_definition.definition
property_definition
represented_definition = property_definition
represented_definition <-
property_definition_representation.definition
property_definition_representation
property_definition_representation.used_representation ->
representation
{representation.name = 'hvac instrument characteristics'}
representation.items[i] ->
{representation_item
representation_item.name = 'parameter measured'}
representation_item =>
descriptive_representation_item
descriptive_representation_item.description

5.1.6.15.7 low_alarm

AIM element: measure_with_unit.value_component

Source: 41

Reference path: product <-
product_definition_formation.of_product
product_definition_formation <-
product_definition.formation
product_definition
characterized_product_definition = product_definition
characterized_product_definition
characterized_definition = characterized_product_definition
characterized_definition <-
property_definition.definition
property_definition <-
property_definition_representation.definition
property_definition_representation
property_definition_representation.using_representation ->
representation
{representation.name = 'hvac instrument characteristics'}
representation.items[i] ->
representation_item =>
{representation_item.name = 'low alarm'}
measure_representation_item <=
measure_with_unit
measure_with_unit.value_component

© ISO 2001 – All rights reserved

5.1.6.15.8 high_alarm

AIM element: measure_with_unit.value_component

Source: 41

Reference path: product <-
product_definition_formation.of_product
product_definition_formation <-
product_definition.formation
product_definition
characterized_product_definition = product_definition
characterized_product_definition
characterized_definition = characterized_product_definition
characterized_definition <-
property_definition.definition
property_definition <-
property_definition_representation.definition
property_definition_representation
property_definition_representation.using_representation ->
representation
{representation.name = 'hvac instrument characteristics'}
representation.items[i] ->
representation_item =>
{representation_item.name = 'high alarm'}
measure_representation_item <=
measure_with_unit
measure_with_unit.value_component

5.1.6.15.9 nameplate_inscription

AIM element: descriptive_representation_item.description

Source: 45

Reference path: product <-
product_definition_formation.of_product
product_definition_formation <-
product_definition.formation
product_definition
characterized_product_definition = product_definition
characterized_product_definition
characterized_definition = characterized_product_definition
characterized_definition <-
property_definition.definition
property_definition
represented_definition = property_definition
represented_definition <-
property_definition_representation.definition
property_definition_representation
property_definition_representation.used_representation ->
representation
{representation.name = 'hvac instrument characteristics'}
representation.items[i] ->

© ISO 2001 – All rights reserved

{representation_item
representation_item.name = 'nameplate inscription'}
representation_item =>
descriptive_representation_item
descriptive_representation_item.description

5.1.6.15.10 divisions

AIM element: descriptive_representation_item.description

Source: 45

Reference path: product <-
product_definition_formation.of_product
product_definition_formation <-
product_definition.formation
product_definition
characterized_product_definition = product_definition
characterized_product_definition
characterized_definition = characterized_product_definition
characterized_definition <-
property_definition.definition
property_definition
represented_definition = property_definition
represented_definition <-
property_definition_representation.definition
property_definition_representation
property_definition_representation.used_representation ->
representation
{representation.name = 'hvac instrument characteristics'}
representation.items[i] ->
{representation_item
representation_item.name = 'divisions'}
representation_item =>
descriptive_representation_item
descriptive_representation_item.description

5.1.6.15.11 hvac_instrument to hvac_flow_control_device

AIM element: PATH

Reference path: product <-
product_definition_formation.of_product
product_definition_formation <-
product_definition.formation
product_definition <-
product_definition_relationship.relating_product_definition
product_definition_relationship
{product_definition_relationship.name = 'data provision'}
product_definition_relationship.related_product_definition ->
product_definition
product_definition.formation ->
product_definition_formation

© ISO 2001 – All rights reserved

product_definition_formation.of_product ->
product

5.1.6.16 Hvac_offset_centred

AIM element: hvac_component_definition

Source: 227

Rules: dependent_instantiable_product_context
product_context_discipline_type_constraint
value_for_application_context

Reference path: hvac_component_definition <=
product_definition
{hvac_component_definition
classification_item = hvac_component_definition
classification_item <-
applied_classification_assignment.items[i]
applied_classification_assignment <=
classification_assignment
classification_assignment.assigned_classification ->
[group =>
hvac_fitting_class]
[group
group.name = 'hvac offset centred']}
{product_definition
product_definition.formation ->
product_definition_formation
product_definition_formation.of_product ->
[product
classification_item = product
classification_item <-
applied_classification_assignment.items[i]
applied_classification_assignment <=
classification_assignment
classification_assignment.assigned_classification ->
(group)
(group <-
group_relationship.related_group
group_relationship
group_relationship.relating_group ->
group)
group.name = 'hvac fitting']
[product
product.frame_of_reference[i] ->
product_context <=
application_context_element
application_context_element.name = 'plant item']})

© ISO 2001 – All rights reserved

5.1.6.16.1 angle

AIM element: [measure_with_unit.value_component]
[measure_with_unit.unit_component]

Source: 41

Rules: subtype_mandatory_shape_representation

Reference path: hvac_component_definition <=
product_definition
characterized_product_definition = product_definition
characterized_product_definition
characterized_definition = characterized_product_definition
characterized_definition <-
property_definition.definition
property_definition =>
product_definition_shape <-
shape_aspect.of_shape
[shape_aspect <-
shape_aspect_relationship.relating_shape_aspect]
[shape_aspect <-
shape_aspect_relationship.related_shape_aspect]
shape_aspect_relationship =>
dimensional_location
dimensional_characteristic = dimensional_location
dimensional_characteristic <-
dimensional_characteristic_representation.dimension
dimensional_characteristic_representation
dimensional_characteristic_representation.representation ->
shape_dimension_representation <=
shape_representation <=
{representation
representation.name = 'hvac offset centred dimensional shape'}
representation
representation.items[i] ->
representation_item =>
{representation_item.name = 'angle'}
measure_representation_item <=
{measure_with_unit =>
plane_angle_measure_with_unit}
measure_with_unit
[measure_with_unit.value_component]
[measure_with_unit.unit_component]

5.1.6.16.2 offset

AIM element: [measure_with_unit.value_component]
[measure_with_unit.unit_component]

Source: 41

Rules: subtype_mandatory_shape_representation

© ISO 2001 – All rights reserved

Reference path: hvac_component_definition <=
product_definition
characterized_product_definition = product_definition
characterized_product_definition
characterized_definition = characterized_product_definition
characterized_definition <-
property_definition.definition
property_definition =>
product_definition_shape <-
shape_aspect.of_shape
[shape_aspect <-
shape_aspect_relationship.relating_shape_aspect]
[shape_aspect <-
shape_aspect_relationship.related_shape_aspect]
shape_aspect_relationship =>
dimensional_location
dimensional_characteristic = dimensional_location
dimensional_characteristic <-
dimensional_characteristic_representation.dimension
dimensional_characteristic_representation
dimensional_characteristic_representation.representation ->
shape_dimension_representation <=
shape_representation <=
{representation
representation.name = 'hvac offset centred dimensional shape'}
representation
representation.items[i] ->
representation_item =>
{representation_item.name = 'offset'}
measure_representation_item <=
{measure_with_unit =>
length_measure_with_unit}
measure_with_unit
[measure_with_unit.value_component]
[measure_with_unit.unit_component]

5.1.6.16.3 length

AIM element: [measure_with_unit.value_component]
[measure_with_unit.unit_component]

Source: 41

Rules: subtype_mandatory_shape_representation

Reference path: hvac_component_definition <=
product_definition
characterized_product_definition = product_definition
characterized_product_definition
characterized_definition = characterized_product_definition
characterized_definition <-
property_definition.definition
property_definition =>
product_definition_shape <-

© ISO 2001 – All rights reserved

shape_aspect.of_shape
[shape_aspect <-
shape_aspect_relationship.relating_shape_aspect]
[shape_aspect <-
shape_aspect_relationship.related_shape_aspect]
shape_aspect_relationship =>
dimensional_location
dimensional_characteristic = dimensional_location
dimensional_characteristic <-
dimensional_characteristic_representation.dimension
dimensional_characteristic_representation
dimensional_characteristic_representation.representation ->
shape_dimension_representation <=
shape_representation <=
{representation
representation.name = 'hvac offset centred dimensional shape'}
representation
representation.items[i] ->
representation_item =>
{representation_item.name = 'length'}
measure_representation_item <=
{measure_with_unit =>
length_measure_with_unit}
measure_with_unit
[measure_with_unit.value_component]
[measure_with_unit.unit_component]

5.1.6.16.4 throat_radius

AIM element: [measure_with_unit.value_component]
[measure_with_unit.unit_component]

Source: 41

Rules: subtype_mandatory_shape_representation

Reference path: hvac_component_definition <=
product_definition
characterized_product_definition = product_definition
characterized_product_definition
characterized_definition = characterized_product_definition
characterized_definition <-
property_definition.definition
property_definition =>
product_definition_shape <-
shape_aspect.of_shape
[shape_aspect <-
shape_aspect_relationship.relating_shape_aspect]
[shape_aspect <-
shape_aspect_relationship.related_shape_aspect]
shape_aspect_relationship =>
dimensional_location
dimensional_characteristic = dimensional_location
dimensional_characteristic <-

© ISO 2001 – All rights reserved

dimensional_characteristic_representation.dimension
dimensional_characteristic_representation
dimensional_characteristic_representation.representation ->
shape_dimension_representation <=
shape_representation <=
{representation
representation.name = 'hvac offset centred dimensional shape'}
representation
representation.items[i] ->
representation_item =>
{representation_item.name = 'throat radius'}
measure_representation_item <=
{measure_with_unit =>
length_measure_with_unit}
measure_with_unit
[measure_with_unit.value_component]
[measure_with_unit.unit_component]

5.1.6.16.5 heel_radius

AIM element: [measure_with_unit.value_component]
[measure_with_unit.unit_component]

Source: 41

Rules: subtype_mandatory_shape_representation

Reference path: hvac_component_definition <=
product_definition
characterized_product_definition = product_definition
characterized_product_definition
characterized_definition = characterized_product_definition
characterized_definition <-
property_definition.definition
property_definition =>
product_definition_shape <-
shape_aspect.of_shape
[shape_aspect <-
shape_aspect_relationship.relating_shape_aspect]
[shape_aspect <-
shape_aspect_relationship.related_shape_aspect]
shape_aspect_relationship =>
dimensional_location
dimensional_characteristic = dimensional_location
dimensional_characteristic <-
dimensional_characteristic_representation.dimension
dimensional_characteristic_representation
dimensional_characteristic_representation.representation ->
shape_dimension_representation <=
shape_representation <=
{representation
representation.name = 'hvac offset centred dimensional shape'}
representation
representation.items[i] ->

© ISO 2001 – All rights reserved

representation_item =>
{representation_item.name = 'heel radius'}
measure_representation_item <=
{measure_with_unit =>
length_measure_with_unit}
measure_with_unit
[measure_with_unit.value_component]
[measure_with_unit.unit_component]

5.1.6.16.6 end_1_connector

AIM element: hvac_connector

Source: 227

Reference path: hvac_component_definition <=
product_definition
characterized_product_definition = product_definition
characterized_product_definition
characterized_definition = characterized_product_definition
characterized_definition <-
property_definition.definition
property_definition =>
product_definition_shape <-
shape_aspect.of_shape
{shape_aspect
shape_aspect.description = 'end 1'}
shape_aspect =>
hvac_connector

5.1.6.16.7 end_2_connector

AIM element: hvac_connector

Source: 227

Reference path: hvac_component_definition <=
product_definition
characterized_product_definition = product_definition
characterized_product_definition
characterized_definition = characterized_product_definition
characterized_definition <-
property_definition.definition
property_definition =>
product_definition_shape <-
shape_aspect.of_shape
{shape_aspect
shape_aspect.description = 'end 2'}
shape_aspect =>
hvac_connector

© ISO 2001 – All rights reserved

5.1.6.16.8 hvac_offset_centred to splitter

AIM element: PATH

Reference path: hvac_component_definition <=
product_definition
characterized_product_definition = product_definition
characterized_product_definition
characterized_definition = characterized_product_definition
characterized_definition <-
property_definition.definition
property_definition =>
product_definition_shape <-
shape_aspect.of_shape
shape_aspect
{shape_aspect.description = 'splitter'}

5.1.6.17 Hvac_offset_ogee_centred

AIM element: hvac_component_definition

Source: 227

Rules: dependent_instantiable_product_context
product_context_discipline_type_constraint
value_for_application_context

Reference path: hvac_component_definition <=
product_definition
{hvac_component_definition
classification_item = hvac_component_definition
classification_item <-
applied_classification_assignment.items[i]
applied_classification_assignment <=
classification_assignment
classification_assignment.assigned_classification ->
[group =>
hvac_fitting_class]
[group
group.name = 'hvac offset ogee centred']}
{product_definition
product_definition.formation ->
product_definition_formation
product_definition_formation.of_product ->
[product
classification_item = product
classification_item <-
applied_classification_assignment.items[i]
applied_classification_assignment <=
classification_assignment
classification_assignment.assigned_classification ->
(group)
(group <-

© ISO 2001 – All rights reserved

group_relationship.related_group
group_relationship
group_relationship.relating_group ->
group)
group.name = 'hvac fitting']
[product
product.frame_of_reference[i] ->
product_context <=
application_context_element
application_context_element.name = 'plant item']})

5.1.6.17.1 angle

AIM element: [measure_with_unit.value_component]
[measure_with_unit.unit_component]

Source: 41

Rules: subtype_mandatory_shape_representation

Reference path: hvac_component_definition <=
product_definition
characterized_product_definition = product_definition
characterized_product_definition
characterized_definition = characterized_product_definition
characterized_definition <-
property_definition.definition
property_definition =>
product_definition_shape <-
shape_aspect.of_shape
[shape_aspect <-
shape_aspect_relationship.relating_shape_aspect]
[shape_aspect <-
shape_aspect_relationship.related_shape_aspect]
shape_aspect_relationship =>
dimensional_location
dimensional_characteristic = dimensional_location
dimensional_characteristic <-
dimensional_characteristic_representation.dimension
dimensional_characteristic_representation
dimensional_characteristic_representation.representation ->
shape_dimension_representation <=
shape_representation <=
{representation
representation.name = 'hvac offset ogee centred dimensional shape'}
representation
representation.items[i] ->
representation_item =>
{representation_item.name = 'angle'}
measure_representation_item <=
{measure_with_unit =>
plane_angle_measure_with_unit}
measure_with_unit

© ISO 2001 – All rights reserved

[measure_with_unit.value_component]
[measure_with_unit.unit_component]

5.1.6.17.2 offset

AIM element: [measure_with_unit.value_component]
[measure_with_unit.unit_component]

Source: 41

Rules: subtype_mandatory_shape_representation

Reference path: hvac_component_definition <=
product_definition
characterized_product_definition = product_definition
characterized_product_definition
characterized_definition = characterized_product_definition
characterized_definition <-
property_definition.definition
property_definition =>
product_definition_shape <-
shape_aspect.of_shape
[shape_aspect <-
shape_aspect_relationship.relating_shape_aspect]
[shape_aspect <-
shape_aspect_relationship.related_shape_aspect]
shape_aspect_relationship =>
dimensional_location
dimensional_characteristic = dimensional_location
dimensional_characteristic <-
dimensional_characteristic_representation.dimension
dimensional_characteristic_representation
dimensional_characteristic_representation.representation ->
shape_dimension_representation <=
shape_representation <=
{representation
representation.name = 'hvac offset ogee centred dimensional shape'}
representation
representation.items[i] ->
representation_item =>
{representation_item.name = 'offset'}
measure_representation_item <=
{measure_with_unit =>
length_measure_with_unit}
measure_with_unit
[measure_with_unit.value_component]
[measure_with_unit.unit_component]

5.1.6.17.3 length

AIM element: [measure_with_unit.value_component]
[measure_with_unit.unit_component]

© ISO 2001 – All rights reserved

Source: 41

Rules: subtype_mandatory_shape_representation

Reference path: hvac_component_definition <=
product_definition
characterized_product_definition = product_definition
characterized_product_definition
characterized_definition = characterized_product_definition
characterized_definition <-
property_definition.definition
property_definition =>
product_definition_shape <-
shape_aspect.of_shape
[shape_aspect <-
shape_aspect_relationship.relating_shape_aspect]
[shape_aspect <-
shape_aspect_relationship.related_shape_aspect]
shape_aspect_relationship =>
dimensional_location
dimensional_characteristic = dimensional_location
dimensional_characteristic <-
dimensional_characteristic_representation.dimension
dimensional_characteristic_representation
dimensional_characteristic_representation.representation ->
shape_dimension_representation <=
shape_representation <=
{representation
representation.name = 'hvac offset ogee centred dimensional shape'}
representation
representation.items[i] ->
representation_item =>
{representation_item.name = 'length'}
measure_representation_item <=
{measure_with_unit =>
length_measure_with_unit}
measure_with_unit
[measure_with_unit.value_component]
[measure_with_unit.unit_component]

5.1.6.17.4 throat_radius

AIM element: [measure_with_unit.value_component]
[measure_with_unit.unit_component]

Source: 41

Rules: subtype_mandatory_shape_representation

Reference path: hvac_component_definition <=
product_definition
characterized_product_definition = product_definition
characterized_product_definition
characterized_definition = characterized_product_definition

© ISO 2001 – All rights reserved

characterized_definition <-
property_definition.definition
property_definition =>
product_definition_shape <-
shape_aspect.of_shape
[shape_aspect <-
shape_aspect_relationship.relating_shape_aspect]
[shape_aspect <-
shape_aspect_relationship.related_shape_aspect]
shape_aspect_relationship =>
dimensional_location
dimensional_characteristic = dimensional_location
dimensional_characteristic <-
dimensional_characteristic_representation.dimension
dimensional_characteristic_representation
dimensional_characteristic_representation.representation ->
shape_dimension_representation <=
shape_representation <=
{representation
representation.name = 'hvac offset ogee centred dimensional shape'}
representation
representation.items[i] ->
representation_item =>
{representation_item.name = 'throat radius'}
measure_representation_item <=
{measure_with_unit =>
length_measure_with_unit}
measure_with_unit
[measure_with_unit.value_component]
[measure_with_unit.unit_component]

5.1.6.17.5 heel_radius

AIM element: [measure_with_unit.value_component]
[measure_with_unit.unit_component]

Source: 41

Rules: subtype_mandatory_shape_representation

Reference path: hvac_component_definition <=
product_definition
characterized_product_definition = product_definition
characterized_product_definition
characterized_definition = characterized_product_definition
characterized_definition <-
property_definition.definition
property_definition =>
product_definition_shape <-
shape_aspect.of_shape
[shape_aspect <-
shape_aspect_relationship.relating_shape_aspect]
[shape_aspect <-
shape_aspect_relationship.related_shape_aspect]

© ISO 2001 – All rights reserved

shape_aspect_relationship =>
dimensional_location
dimensional_characteristic = dimensional_location
dimensional_characteristic <-
dimensional_characteristic_representation.dimension
dimensional_characteristic_representation
dimensional_characteristic_representation.representation ->
shape_dimension_representation <=
shape_representation <=
{representation
representation.name = 'hvac offset ogee centred dimensional shape'}
representation
representation.items[i] ->
representation_item =>
{representation_item.name = 'heel radius'}
measure_representation_item <=
{measure_with_unit =>
length_measure_with_unit}
measure_with_unit
[measure_with_unit.value_component]
[measure_with_unit.unit_component]

5.1.6.17.6 end_1_connector

AIM element: hvac_connector

Source: 227

Reference path: hvac_component_definition <=
product_definition
characterized_product_definition = product_definition
characterized_product_definition
characterized_definition = characterized_product_definition
characterized_definition <-
property_definition.definition
property_definition =>
product_definition_shape <-
shape_aspect.of_shape
{shape_aspect
shape_aspect.description = 'end 1'}
shape_aspect =>
hvac_connector

5.1.6.17.7 end_2_connector

AIM element: hvac_connector

Source: 227

Reference path: hvac_component_definition <=
product_definition
characterized_product_definition = product_definition
characterized_product_definition

© ISO 2001 – All rights reserved

characterized_definition = characterized_product_definition
characterized_definition <-
property_definition.definition
property_definition =>
product_definition_shape <-
shape_aspect.of_shape
{shape_aspect
shape_aspect.description = 'end 2'}
shape_aspect =>
hvac_connector

5.1.6.18 Hvac_takeoff

AIM element: hvac_component_definition

Source: 227

Rules: dependent_instantiable_product_context
product_context_discipline_type_constraint
value_for_application_context

Reference path: hvac_component_definition <=
product_definition
{hvac_component_definition
classification_item = hvac_component_definition
classification_item <-
applied_classification_assignment.items[i]
applied_classification_assignment <=
classification_assignment
classification_assignment.assigned_classification ->
[group =>
hvac_fitting_class]
[group
group.name = 'hvac takeoff']}
{product_definition
product_definition.formation ->
product_definition_formation
product_definition_formation.of_product ->
[product
classification_item = product
classification_item <-
applied_classification_assignment.items[i]
applied_classification_assignment <=
classification_assignment
classification_assignment.assigned_classification ->
(group)
(group <-
group_relationship.related_group
group_relationship
group_relationship.relating_group ->
group)
group.name = 'hvac fitting']
[product

© ISO 2001 – All rights reserved

product.frame_of_reference[i] ->
product_context <=
application_context_element
application_context_element.name = 'plant item']})

5.1.6.18.1 end_1_connector

AIM element: hvac_connector

Source: 227

Reference path: hvac_component_definition <=
product_definition
characterized_product_definition = product_definition
characterized_product_definition
characterized_definition = characterized_product_definition
characterized_definition <-
property_definition.definition
property_definition =>
product_definition_shape <-
shape_aspect.of_shape
{shape_aspect
shape_aspect.description = 'end 1'}
shape_aspect =>
hvac_connector

5.1.6.18.2 end_2_connector

AIM element: hvac_connector

Source: 227

Reference path: hvac_component_definition <=
product_definition
characterized_product_definition = product_definition
characterized_product_definition
characterized_definition = characterized_product_definition
characterized_definition <-
property_definition.definition
property_definition =>
product_definition_shape <-
shape_aspect.of_shape
{shape_aspect
shape_aspect.description = 'end 2'}
shape_aspect =>
hvac_connector

5.1.6.18.3 end_3_connector

AIM element: hvac_connector

Source: 227

© ISO 2001 – All rights reserved

Reference path: hvac_component_definition <=
product_definition
characterized_product_definition = product_definition
characterized_product_definition
characterized_definition = characterized_product_definition
characterized_definition <-
property_definition.definition
property_definition =>
product_definition_shape <-
shape_aspect.of_shape
{shape_aspect
shape_aspect.description = 'end '}
shape_aspect =>
hvac_connector

5.1.6.18.4 centre_to_end_1_length

AIM element: [measure_with_unit.value_component]
[measure_with_unit.unit_component]

Source: 41

Rules: subtype_mandatory_shape_representation

Reference path: hvac_component_definition <=
product_definition
characterized_product_definition = product_definition
characterized_product_definition
characterized_definition = characterized_product_definition
characterized_definition <-
property_definition.definition
property_definition =>
product_definition_shape <-
shape_aspect.of_shape
[shape_aspect <-
shape_aspect_relationship.relating_shape_aspect]
[shape_aspect <-
shape_aspect_relationship.related_shape_aspect]
shape_aspect_relationship =>
dimensional_location
dimensional_characteristic = dimensional_location
dimensional_characteristic <-
dimensional_characteristic_representation.dimension
dimensional_characteristic_representation
dimensional_characteristic_representation.representation ->
shape_dimension_representation <=
shape_representation <=
{representation
representation.name = 'hvac takeoff dimensional shape'}
representation
representation.items[i] ->
representation_item =>
{representation_item.name = 'centre to end 1 length'}
measure_representation_item <=

© ISO 2001 – All rights reserved

{measure_with_unit =>
length_measure_with_unit}
measure_with_unit
[measure_with_unit.value_component]
[measure_with_unit.unit_component]

5.1.6.18.5 centre_to_end_2_length

AIM element: [measure_with_unit.value_component]
[measure_with_unit.unit_component]

Source: 41

Rules: subtype_mandatory_shape_representation

Reference path: hvac_component_definition <=
product_definition
characterized_product_definition = product_definition
characterized_product_definition
characterized_definition = characterized_product_definition
characterized_definition <-
property_definition.definition
property_definition =>
product_definition_shape <-
shape_aspect.of_shape
[shape_aspect <-
shape_aspect_relationship.relating_shape_aspect]
[shape_aspect <-
shape_aspect_relationship.related_shape_aspect]
shape_aspect_relationship =>
dimensional_location
dimensional_characteristic = dimensional_location
dimensional_characteristic <-
dimensional_characteristic_representation.dimension
dimensional_characteristic_representation
dimensional_characteristic_representation.representation ->
shape_dimension_representation <=
shape_representation <=
{representation
representation.name = 'hvac takeoff dimensional shape'}
representation
representation.items[i] ->
representation_item =>
{representation_item.name = 'centre to end 2 length'}
measure_representation_item <=
{measure_with_unit =>
length_measure_with_unit}
measure_with_unit
[measure_with_unit.value_component]
[measure_with_unit.unit_component]

5.1.6.18.6 centre_to_end_3_length

© ISO 2001 – All rights reserved

AIM element: [measure_with_unit.value_component]
[measure_with_unit.unit_component]

Source: 41

Rules: subtype_mandatory_shape_representation

Reference path: hvac_component_definition <=
product_definition
characterized_product_definition = product_definition
characterized_product_definition
characterized_definition = characterized_product_definition
characterized_definition <-
property_definition.definition
property_definition =>
product_definition_shape <-
shape_aspect.of_shape
[shape_aspect <-
shape_aspect_relationship.relating_shape_aspect]
[shape_aspect <-
shape_aspect_relationship.related_shape_aspect]
shape_aspect_relationship =>
dimensional_location
dimensional_characteristic = dimensional_location
dimensional_characteristic <-
dimensional_characteristic_representation.dimension
dimensional_characteristic_representation
dimensional_characteristic_representation.representation ->
shape_dimension_representation <=
shape_representation <=
{representation
representation.name = 'hvac takeoff dimensional shape'}
representation
representation.items[i] ->
representation_item =>
{representation_item.name = 'centre to end 3 length'}
measure_representation_item <=
{measure_with_unit =>
length_measure_with_unit}
measure_with_unit
[measure_with_unit.value_component]
[measure_with_unit.unit_component]

5.1.6.18.7 takeoff_angle

AIM element: [measure_with_unit.value_component]
[measure_with_unit.unit_component]

Source: 41

Rules: subtype_mandatory_shape_representation

Reference path: hvac_component_definition <=
product_definition

© ISO 2001 – All rights reserved

characterized_product_definition = product_definition
characterized_product_definition
characterized_definition = characterized_product_definition
characterized_definition <-
property_definition.definition
property_definition =>
product_definition_shape <-
shape_aspect.of_shape
[shape_aspect <-
shape_aspect_relationship.relating_shape_aspect]
[shape_aspect <-
shape_aspect_relationship.related_shape_aspect]
shape_aspect_relationship =>
dimensional_location
dimensional_characteristic = dimensional_location
dimensional_characteristic <-
dimensional_characteristic_representation.dimension
dimensional_characteristic_representation
dimensional_characteristic_representation.representation ->
shape_dimension_representation <=
shape_representation <=
{representation
representation.name = 'hvac takeoff dimensional shape'}
representation
representation.items[i] ->
representation_item =>
{representation_item.name = 'takeoff angle'}
measure_representation_item <=
{measure_with_unit =>
plane_angle_measure_with_unit}
measure_with_unit
[measure_with_unit.value_component]
[measure_with_unit.unit_component]

5.1.6.19 Hvac_transition

AIM element: hvac_component_definition

Source: 227

Rules: dependent_instantiable_product_context
product_context_discipline_type_constraint
value_for_application_context

Reference path: hvac_component_definition <=
product_definition
{hvac_component_definition
classification_item = hvac_component_definition
classification_item <-
applied_classification_assignment.items[i]
applied_classification_assignment <=
classification_assignment
classification_assignment.assigned_classification ->
[group =>

© ISO 2001 – All rights reserved

hvac_fitting_class]
[group
group.name = 'hvac transition']}
{product_definition
product_definition.formation ->
product_definition_formation
product_definition_formation.of_product ->
[product
classification_item = product
classification_item <-
applied_classification_assignment.items[i]
applied_classification_assignment <=
classification_assignment
classification_assignment.assigned_classification ->
(group)
(group <-
group_relationship.related_group
group_relationship
group_relationship.relating_group ->
group)
group.name = 'hvac fitting']
[product
product.frame_of_reference[i] ->
product_context <=
application_context_element
application_context_element.name = 'plant item']})

5.1.6.19.1 offset_x

AIM element: [measure_with_unit.value_component]
[measure_with_unit.unit_component]

Source: 41

Rules: subtype_mandatory_shape_representation

Reference path: hvac_component_definition <=
product_definition
characterized_product_definition = product_definition
characterized_product_definition
characterized_definition = characterized_product_definition
characterized_definition <-
property_definition.definition
property_definition =>
product_definition_shape <-
shape_aspect.of_shape
[shape_aspect <-
shape_aspect_relationship.relating_shape_aspect]
[shape_aspect <-
shape_aspect_relationship.related_shape_aspect]
shape_aspect_relationship =>
dimensional_location
dimensional_characteristic = dimensional_location
dimensional_characteristic <-

© ISO 2001 – All rights reserved

dimensional_characteristic_representation.dimension
dimensional_characteristic_representation
dimensional_characteristic_representation.representation ->
shape_dimension_representation <=
shape_representation <=
{representation
representation.name = 'hvac transition dimensional shape'}
representation
representation.items[i] ->
representation_item =>
{representation_item.name = 'offset x'}
measure_representation_item <=
{measure_with_unit =>
length_measure_with_unit}
measure_with_unit
[measure_with_unit.value_component]
[measure_with_unit.unit_component]

5.1.6.19.2 offset_y

AIM element: [measure_with_unit.value_component]
[measure_with_unit.unit_component]

Source: 41

Rules: subtype_mandatory_shape_representation

Reference path: hvac_component_definition <=
product_definition
characterized_product_definition = product_definition
characterized_product_definition
characterized_definition = characterized_product_definition
characterized_definition <-
property_definition.definition
property_definition =>
product_definition_shape <-
shape_aspect.of_shape
[shape_aspect <-
shape_aspect_relationship.relating_shape_aspect]
[shape_aspect <-
shape_aspect_relationship.related_shape_aspect]
shape_aspect_relationship =>
dimensional_location
dimensional_characteristic = dimensional_location
dimensional_characteristic <-
dimensional_characteristic_representation.dimension
dimensional_characteristic_representation
dimensional_characteristic_representation.representation ->
shape_dimension_representation <=
shape_representation <=
{representation
representation.name = 'hvac transition dimensional shape'}
representation
representation.items[i] ->

© ISO 2001 – All rights reserved

representation_item =>
{representation_item.name = 'offset y'}
measure_representation_item <=
{measure_with_unit =>
length_measure_with_unit}
measure_with_unit
[measure_with_unit.value_component]
[measure_with_unit.unit_component]

5.1.6.19.3 length

AIM element: [measure_with_unit.value_component]
[measure_with_unit.unit_component]

Source: 41

Rules: subtype_mandatory_shape_representation

Reference path: hvac_component_definition <=
product_definition
characterized_product_definition = product_definition
characterized_product_definition
characterized_definition = characterized_product_definition
characterized_definition <-
property_definition.definition
property_definition =>
product_definition_shape <-
shape_aspect.of_shape
[shape_aspect <-
shape_aspect_relationship.relating_shape_aspect]
[shape_aspect <-
shape_aspect_relationship.related_shape_aspect]
shape_aspect_relationship =>
dimensional_location
dimensional_characteristic = dimensional_location
dimensional_characteristic <-
dimensional_characteristic_representation.dimension
dimensional_characteristic_representation
dimensional_characteristic_representation.representation ->
shape_dimension_representation <=
shape_representation <=
{representation
representation.name = 'hvac transition dimensional shape'}
representation
representation.items[i] ->
representation_item =>
{representation_item.name = 'length'}
measure_representation_item <=
{measure_with_unit =>
length_measure_with_unit}
measure_with_unit
[measure_with_unit.value_component]
[measure_with_unit.unit_component]

© ISO 2001 – All rights reserved

5.1.6.19.4 end_1_connector

AIM element: hvac_connector

Source: 227

Reference path: hvac_component_definition <=
product_definition
characterized_product_definition = product_definition
characterized_product_definition
characterized_definition = characterized_product_definition
characterized_definition <-
property_definition.definition
property_definition =>
product_definition_shape <-
shape_aspect.of_shape
{shape_aspect
shape_aspect.description = 'end 1'}
shape_aspect =>
hvac_connector

5.1.6.19.5 end_2_connector

AIM element: hvac_connector

Source: 227

Reference path: hvac_component_definition <=
product_definition
characterized_product_definition = product_definition
characterized_product_definition
characterized_definition = characterized_product_definition
characterized_definition <-
property_definition.definition
property_definition =>
product_definition_shape <-
shape_aspect.of_shape
{shape_aspect
shape_aspect.description = 'end 2'}
shape_aspect =>
hvac_connector

5.1.6.20 Hvac_transition_slanted

AIM element: hvac_component_definition

Source: 227

Rules: dependent_instantiable_product_context
product_context_discipline_type_constraint
value_for_application_context

Reference path: hvac_component_definition <=

© ISO 2001 – All rights reserved

product_definition
{hvac_component_definition
classification_item = hvac_component_definition
classification_item <-
applied_classification_assignment.items[i]
applied_classification_assignment <=
classification_assignment
classification_assignment.assigned_classification ->
[group =>
hvac_fitting_class]
[group
group.name = 'hvac transition slanted']}
{product_definition
product_definition.formation ->
product_definition_formation
product_definition_formation.of_product ->
[product
classification_item = product
classification_item <-
applied_classification_assignment.items[i]
applied_classification_assignment <=
classification_assignment
classification_assignment.assigned_classification ->
(group)
(group <-
group_relationship.related_group
group_relationship
group_relationship.relating_group ->
group)
group.name = 'hvac fitting']
[product
product.frame_of_reference[i] ->
product_context <=
application_context_element
application_context_element.name = 'plant item']})

5.1.6.20.1 slant_angle

AIM element: [measure_with_unit.value_component]
[measure_with_unit.unit_component]

Source: 41

Rules: subtype_mandatory_shape_representation

Reference path: hvac_component_definition <=
product_definition
characterized_product_definition = product_definition
characterized_product_definition
characterized_definition = characterized_product_definition
characterized_definition <-
property_definition.definition
property_definition =>
product_definition_shape <-

© ISO 2001 – All rights reserved

shape_aspect.of_shape
[shape_aspect <-
shape_aspect_relationship.relating_shape_aspect]
[shape_aspect <-
shape_aspect_relationship.related_shape_aspect]
shape_aspect_relationship =>
dimensional_location
dimensional_characteristic = dimensional_location
dimensional_characteristic <-
dimensional_characteristic_representation.dimension
dimensional_characteristic_representation
dimensional_characteristic_representation.representation ->
shape_dimension_representation <=
shape_representation <=
{representation
representation.name = 'hvac transition slanted dimensional shape'}
representation
representation.items[i] ->
representation_item =>
{representation_item.name = 'slant angle'}
measure_representation_item <=
{measure_with_unit =>
plane_angle_measure_with_unit}
measure_with_unit
[measure_with_unit.value_component]
[measure_with_unit.unit_component]

5.1.6.20.2 length

AIM element: [measure_with_unit.value_component]
[measure_with_unit.unit_component]

Source: 41

Rules: subtype_mandatory_shape_representation

Reference path: hvac_component_definition <=
product_definition
characterized_product_definition = product_definition
characterized_product_definition
characterized_definition = characterized_product_definition
characterized_definition <-
property_definition.definition
property_definition =>
product_definition_shape <-
shape_aspect.of_shape
[shape_aspect <-
shape_aspect_relationship.relating_shape_aspect]
[shape_aspect <-
shape_aspect_relationship.related_shape_aspect]
shape_aspect_relationship =>
dimensional_location
dimensional_characteristic = dimensional_location
dimensional_characteristic <-

© ISO 2001 – All rights reserved

dimensional_characteristic_representation.dimension
dimensional_characteristic_representation
dimensional_characteristic_representation.representation ->
shape_dimension_representation <=
shape_representation <=
{representation
representation.name = 'hvac transition slanted dimensional shape'}
representation
representation.items[i] ->
representation_item =>
{representation_item.name = 'length'}
measure_representation_item <=
{measure_with_unit =>
length_measure_with_unit}
measure_with_unit
[measure_with_unit.value_component]
[measure_with_unit.unit_component]

5.1.6.20.3 end_1_connector

AIM element: hvac_connector

Source: 227

Reference path: hvac_component_definition <=
product_definition
characterized_product_definition = product_definition
characterized_product_definition
characterized_definition = characterized_product_definition
characterized_definition <-
property_definition.definition
property_definition =>
product_definition_shape <-
shape_aspect.of_shape
{shape_aspect
shape_aspect.description = 'end 1'}
shape_aspect =>
hvac_connector

5.1.6.20.4 end_2_connector

AIM element: hvac_connector

Source: 227

Reference path: hvac_component_definition <=
product_definition
characterized_product_definition = product_definition
characterized_product_definition
characterized_definition = characterized_product_definition
characterized_definition <-
property_definition.definition
property_definition =>

© ISO 2001 – All rights reserved

product_definition_shape <-
shape_aspect.of_shape
{shape_aspect
shape_aspect.description = 'end 2'}
shape_aspect =>
hvac_connector

5.1.6.21 Splitter

AIM element: shape_aspect

Source: 41

Reference path: shape_aspect
{shape_aspect.description = 'splitter'}

5.1.6.21.1 splitter_id

AIM element: shape_aspect.name

Source: 41

5.1.6.21.2 splitter_radius

AIM element: [measure_with_unit.value_component]
[measure_with_unit.unit_component]

Source: 41

Reference path: shape_aspect
shape_definition = shape_aspect
shape_definition
characterized_definition = shape_definition
characterized_definition <-
property_definition.definition
property_definition
represented_definition = property_definition
represented_definition <-
property_definition_representation.definition
property_definition_representation
property_definition_representation.used_representation ->
representation
{representation.name = 'splitter dimensional representation'}
representation.items[i] ->
representation_item =>
{representation_item.name = 'radius'}
measure_representation_item <=
{measure_with_unit =>
length_measure_with_unit}
measure_with_unit
[measure_with_unit.value_component]
[measure_with_unit.unit_component]

© ISO 2001 – All rights reserved

5.1.6.21.3 splitter_radius_centre_offset

AIM element: [measure_with_unit.value_component]
[measure_with_unit.unit_component]

Source: 41

Reference path: shape_aspect
shape_definition = shape_aspect
shape_definition
characterized_definition = shape_definition
characterized_definition <-
property_definition.definition
property_definition
represented_definition = property_definition
represented_definition <-
property_definition_representation.definition
property_definition_representation
property_definition_representation.used_representation ->
representation
{representation.name = 'splitter dimensional representation'}
representation.items[i] ->
representation_item =>
{representation_item.name = 'radius centre offset'}
measure_representation_item <=
{measure_with_unit =>
length_measure_with_unit}
measure_with_unit
[measure_with_unit.value_component]
[measure_with_unit.unit_component]

5.1.6.21.4 straight_portion_length

AIM element: [measure_with_unit.value_component]
[measure_with_unit.unit_component]

Source: 41

Reference path: shape_aspect
shape_definition = shape_aspect
shape_definition
characterized_definition = shape_definition
characterized_definition <-
property_definition.definition
property_definition
represented_definition = property_definition
represented_definition <-
property_definition_representation.definition
property_definition_representation
property_definition_representation.used_representation ->
representation
{representation.name = 'splitter dimensional representation'}
representation.items[i] ->
representation_item =>

© ISO 2001 – All rights reserved

{representation_item.name = 'straight portion length'}
measure_representation_item <=
{measure_with_unit =>
length_measure_with_unit}
measure_with_unit
[measure_with_unit.value_component]
[measure_with_unit.unit_component]

5.1.7 HVAC_system_functional_characterization UoF

5.1.7.1 Hvac_plant_item_branch_connection

AIM element: hvac_plant_item_branch_connection

Source: 227

Reference path: hvac_plant_item_branch_connection <=
shape_aspect_relationship
{shape_aspect_relationship
[shape_aspect_relationship.relating_shape_aspect ->
shape_aspect
shape_aspect.of_shape ->
product_definition_shape <=
property_definition
property_definition.definition ->
characterized_definition
characterized_definition = characterized_product_definition
characterized_product_definition
characterized_product_definition = product_definition
product_definition =>
hvac_section_segment_definition]
[shape_aspect_relationship.related_shape_aspect ->
shape_aspect =>
plant_item_connector]}

5.1.7.1.1 branch_sequence_id

AIM element: shape_aspect_relationship.name

Source: 41

Reference path: hvac_plant_item_branch_connection <=
{shape_aspect_relationship
shape_aspect_relationship.relating_shape_aspect ->
shape_aspect
shape_aspect.of_shape ->
product_definition_shape <-
[shape_aspect.of_shape
shape_aspect
shape_aspect.description = 'termination 1']
[shape_aspect.of_shape
shape_aspect
shape_aspect.description = 'termination 2']}

© ISO 2001 – All rights reserved

shape_aspect_relationship
shape_aspect_relationship.name

5.1.7.2 Hvac_plant_item_connection

AIM element: hvac_plant_item_connection

Source: 227

Reference path: hvac_plant_item_connection <=
shape_aspect_relationship
{shape_aspect_relationship
[shape_aspect_relationship.relating_shape_aspect ->
shape_aspect =>
hvac_section_segment_termination]
[shape_aspect_relationship.related_shape_aspect ->
shape_aspect =>
plant_item_connector]}

5.1.7.3 Hvac_plant_item_termination

AIM element: hvac_section_segment_termination

Source: 227

Reference path: hvac_section_segment_termination <=
shape_aspect

5.1.7.4 Hvac_section_branch_termination

AIM element: hvac_section_segment_termination

Source: 227

Reference path: hvac_section_segment_termination <=
shape_aspect

5.1.7.4.1 hvac_section_branch_termination to hvac_branch_connection

AIM element: PATH

Reference path: hvac_section_segment_termination <=
shape_aspect <-
shape_aspect_relationship.related_shape_aspect
shape_aspect_relationship =>
hvac_branch_connection

5.1.7.5 Hvac_section_segment

AIM element: hvac_section_segment_definition

© ISO 2001 – All rights reserved

Source: 227

Reference path: hvac_section_segment_definition <=
product_definition
{product_definition
product_definition.frame_of_reference ->
product_definition_context <=
application_context_element
application_context_element.name = 'functional definition'}

5.1.7.5.1 pressure_drop

AIM element: [measure_with_unit.value_component]
[measure_with_unit.unit_component]

Source: 41

Reference path: hvac_section_segment_definition <=
product_definition
characterized_product_definition = product_definition
characterized_product_definition
characterized_definition = characterized_product_definition
characterized_definition <-
property_definition.definition
property_definition <-
represented_definition = property_definition
represented_definition <-
property_definition_representation.definition
property_definition_representation
property_definition_representation.using_representation ->
representation
{representation.name = 'hvac section segment characteristics'}
(representation.items[i] ->
{representation_item
(representation_item.name = 'pressure drop')
(representation_item.name = 'maximum pressure drop')
(representation_item.name = 'minimum pressure drop')})
([representation.items[i] ->
{representation_item
representation_item.name = 'maximum pressure drop'}]
[representation.items[i] ->
{representation_item
representation_item.name = 'minimum pressure drop'}])
representation_item =>
measure_representation_item <=
measure_with_unit
[measure_with_unit.value_component]
[measure_with_unit.unit_component]

5.1.7.5.2 hvac_section_segment to hvac_plant_item_branch_connection

AIM element: PATH

© ISO 2001 – All rights reserved

Reference path: hvac_section_segment_definition <=
product_definition
characterized_product_definition = product_definition
characterized_product_definition
characterized_definition = characterized_product_definition
characterized_definition <-
property_definition.definition
property_definition =>
product_definition_shape <-
shape_aspect.of_shape
shape_aspect <-
shape_aspect_relationship.relating_shape_aspect
shape_aspect_relationship =>
hvac_plant_item_branch_connection

5.1.7.5.3 hvac_section_segment to hvac_section_segment_insulation

AIM element: PATH

Reference path: hvac_section_segment_definition <=
product_definition <-
product_definition_relationship.relating_product_definition
product_definition_relationship
{product_definition_relationship
product_definition_relationship.name = 'hvac segment insulation'}

5.1.7.5.4 hvac_section_segment to stream_design_case

AIM element: PATH

Reference path: hvac_section_segment_definition <=
product_definition
characterized_product_definition = product_definition
characterized_product_definition
characterized_definition = characterized_product_definition
characterized_definition <-
property_definition.definition
property_definition =>
stream_design_case

5.1.7.6 Hvac_section_segment_insulation

AIM element: product_definition_relationship

Source: 41

Reference path: {product_definition_relationship
[product_definition_relationship.name = 'hvac segment insulation']
[product_definition_relationship.relating_product_definition ->
product_definition =>
hvac_section_segment_definition]}

© ISO 2001 – All rights reserved

5.1.7.6.1 insulation_thickness

AIM element: [measure_with_unit.value_component]
[measure_with_unit.unit_component]

Source: 41

Reference path: product_definition_relationship
characterized_product_definition = product_definition_relationship
characterized_product_definition
characterized_definition = characterized_product_definition
characterized_definition <-
property_definition.definition
{property_definition =>
product_definition_shape}
property_definition
represented_definition = property_definition
represented_definition <-
property_definition_representation.definition
{property_definition_representation =>
shape_definition_representation}
property_definition_representation
property_definition_representation.used_representation ->
{representation
representation.name = 'hvac segment insulation characteristics'}
representation
(representation.items[i] ->
{representation_item
(representation_item.name = 'thickness')
(representation_item.name = 'maximum thickness')
(representation_item.name = 'minimum thickness')})
([representation.items[i] ->
{representation_item
representation_item.name = 'maximum thickness'}]
[representation.items[i] ->
{representation_item
representation_item.name = 'minimum thickness'}])
representation_item =>
measure_representation_item <=
{measure_with_unit =>
length_measure_with_unit}
measure_with_unit
[measure_with_unit.value_component]
[measure_with_unit.unit_component]

5.1.7.6.2 insulation_type

AIM element: product.name

Source: 41

Reference path: product_definition_relationship
product_definition_relationship.related_product_definition ->
product_definition

© ISO 2001 – All rights reserved

product_definition.formation ->
product_definition_formation
product_definition_formation.of_product ->
product
product.name

5.1.7.6.3 insulation_description

AIM element: product_definition_relationship.description

Source: 41

5.1.7.6.4 insulation_specification

AIM element: document

Source: 41

Reference path: product_definition_relationship
document_item = product_definition_relationship
document_item <-
applied_document_reference.items[i]
applied_document_reference <=
document_reference
document_reference.assigned_document ->
{document
document.kind ->
document_type
document_type.product_data_type = 'hvac insulation specification'}
document

5.1.7.7 Hvac_section_segment_termination

AIM element: hvac_section_segment_termination

Source: 227

Reference path: hvac_section_segment_termination <=
shape_aspect

5.1.7.7.1 flow_direction

AIM element: descriptive_representation_item.description

Source: 45

Reference path: hvac_section_segment_definition <=
shape_aspect
shape_definition = shape_aspect
shape_definition
characterized_definition = shape_definition
characterized_definition <-

© ISO 2001 – All rights reserved

property_definition.definition
property_definition
represented_definition = property_definition
represented_definition <-
property_definition_representation.definition
property_definition_representation
property_definition_representation.used_representation ->
representation
representation.items[i] ->
{representation_item
representation_item.name = 'flow direction'}
representation_item =>
descriptive_representation_item
descriptive_representation_item.description
{(descriptive_representation_item.description = 'both')
(descriptive_representation_item.description = 'in')
(descriptive_representation_item.description = 'out')
(descriptive_representation_item.description = 'not specified')}

5.1.7.7.2 start_location

AIM element: (point)
(shape_aspect)

Source: 41, 42

Reference path: hvac_section_segment_termination <=
(shape_aspect
shape_definition = shape_aspect
shape_definition
characterized_definition = shape_definition
characterized_definition <-
property_definition.definition
property_definition
represented_definition = property_definition
represented_definition <-
property_definition_representation.definition
property_definition_representation
property_definition_representation.used_representation ->
representation
representation.items[i] ->
{representation_item
representation_item.name = 'section start point'}
representation_item =>
geometric_representation_item =>
point)
(shape_aspect <-
shape_aspect_relationship.relating_shape_aspect
shape_aspect_relationship
shape_aspect_relationship.related_shape_aspect ->
{shape_aspect
shape_aspect.name = 'section start location'}
shape_aspect)

© ISO 2001 – All rights reserved

5.1.7.7.3 end_location

AIM element: (point)
(shape_aspect)

Source: 41, 42

Reference path: hvac_section_segment_termination <=
(shape_aspect
shape_definition = shape_aspect
shape_definition
characterized_definition = shape_definition
characterized_definition <-
property_definition.definition
property_definition
represented_definition = property_definition
represented_definition <-
property_definition_representation.definition
property_definition_representation
property_definition_representation.used_representation ->
representation
representation.items[i] ->
{representation_item
representation_item.name = 'section end point'}
representation_item =>
geometric_representation_item =>
point)
(shape_aspect <-
shape_aspect_relationship.relating_shape_aspect
shape_aspect_relationship
shape_aspect_relationship.related_shape_aspect ->
{shape_aspect
shape_aspect.name = 'section end location'}
shape_aspect)

5.1.7.8 Hvac_section_termination

AIM element: hvac_section_segment_termination

Source: 227

Reference path: hvac_section_segment_termination <=
shape_aspect
{[shape_aspect
shape_aspect.name = 'hvac section termination']
[shape_aspect
shape_aspect.of_shape ->
product_definition_shape <=
property_definition
property_definition.definition ->
characterized_definition
characterized_definition = characterized_product_definition
characterized_product_definition
characterized_product_definition = product_definition_relationship

© ISO 2001 – All rights reserved

product_definition_relationship
[product_definition_relationship.related_product_defintion ->
{product_definition =>
hvac_section_segment_definition}
product_definition
product_definition.frame_of_reference ->
product_definition_context <=
application_context_element
application_context_element.name = 'functional definition']
[product_definition_relationship.relating_product_defintion ->
{product_definition =>
hvac_system_section_definition}
product_definition
product_definition.frame_of_reference ->
product_definition_context <=
application_context_element
application_context_element.name = 'functional definition']]}

5.1.7.8.1 location

AIM element: cartesian_point

Source: 42

Reference path: hvac_section_segment_termination <=
shape_aspect
represented_definition = shape_aspect
represented_definition <-
property_definition_representation.definition
property_definition_representation
property_definition_representation.used_representation ->
{representation
representation.name = 'hvac section segment termination position'}
representation
representation.items[i] ->
representation_item =>
geometric_representation_item =>
point =>
cartesian_point

5.1.7.8.2 start_or_end

AIM element: descriptive_representation_item.description

Source: 45

Reference path: hvac_section_segment_termination <=
shape_aspect
represented_definition = shape_aspect
represented_definition <-
property_definition_representation.definition
property_definition_representation
property_definition_representation.used_representation ->

© ISO 2001 – All rights reserved

{representation
representation.name = 'hvac section segment termination position'}
representation
representation.items[i] ->
{representation_item
representation_item.name = 'start or end'}
representation_item =>
descriptive_representation_item
descriptive_representation_item.description
{(descriptive_representation_item.description = 'start')
(descriptive_representation_item.description = 'end')}

5.1.7.8.3 hvac_section_segement_termination to hvac_system_section

AIM element: PATH

Reference path: hvac_section_segment_termination <=
shape_aspect
shape_aspect.of_shape ->
product_definition_shape <=
property_definition
property_definition.definition ->
characterized_definition
characterized_definition = characterized_product_definition
characterized_product_definition
characterized_product_definition = product_definition_relationship
product_definition_relationship
product_definition_relationship.relating_product_defintion ->
{product_definition
product_definition.frame_of_reference ->
product_definition_context <=
application_context_element
application_context_element.name = 'functional definition'}
product_definition =>
hvac_system_section_definition

5.1.7.9 Hvac_section_to_section_connection

AIM element: hvac_termination_connection

Source: 227

Reference path: hvac_termination_connection <=
shape_aspect_relationship

5.1.7.9.1 section_to_section_connection_id

AIM element: shape_aspect_relationship.name

Source: 41

Reference path: hvac_termination_connection <=

© ISO 2001 – All rights reserved

shape_aspect_relationship
shape_aspect_relationship.name

5.1.7.9.2 hvac_section_to_section_connection to hvac_section_to_-section_termination

AIM element: PATH

Reference path: hvac_termination_connection <=
shape_aspect_relationship
[shape_aspect_relationship.relating_shape_aspect ->
shape_aspect =>
hvac_termination_connection]
[shape_aspect_relationship.related_shape_aspect ->
shape_aspect =>
hvac_termination_connection]

5.1.7.10 Hvac_section_to_section_termination

AIM element: hvac_section_segment_termination

Source: 227

Reference path: hvac_section_segment_termination <=
shape_aspect

5.1.7.11 Hvac_specification

AIM element: document

Source: 41

Reference path: {document
document.kind ->
document_type
document_type.product_data_type = 'hvac specification'}

5.1.7.11.1 hvac_specification_id

AIM element: document.id

Source: 41

5.1.7.11.2 name

AIM element: document.name

Source: 41

© ISO 2001 – All rights reserved

5.1.7.11.3 owner

AIM element: (organization.name)
([person.first_name]
[person.last_name])

Source: 41

Reference path: document
(plant_spatial_configuration_organization_item = document
plant_spatial_configuration_organization_item <-
plant_spatial_configuration_organization_assignment.items[i]
plant_spatial_configuration_organization_assignment <=
{organization_assignment
organization_assignment.role ->
organization_role
organization_role.name = 'owner'}
organization_assignment
organization_assignment.assigned_organization ->
organization
organization.name)
(plant_spatial_configuration_person_item = document
plant_spatial_configuration_person_item <-
plant_spatial_configuration_person_assignment.items[i]
plant_spatial_configuration_person_assignment <=
{person_assignment
person_assignment.role ->
person_role
person_role.name = 'owner'}
person_assignment
person_assignment.assigned_person ->
person
[person.first_name]
[person.last_name])

5.1.7.11.4 service_description

AIM element: document_usage_constraint

Source: 41

Reference path: document <-
document_usage_constraint.source
document_usage_constraint
{document_usage_constraint
document_usage_constraint.subject_element = 'service description'}

5.1.7.11.5 hvac_specification to hvac_section_segment

AIM element: PATH

Reference path: document <-
document_reference.assigned_document

© ISO 2001 – All rights reserved

document_reference =>
applied_document_reference
applied_document_reference.items[i] ->
document_item
document_item = plant_line_segment_definition
hvac_section_segment_definition

5.1.7.12 Hvac_system_section

AIM element: hvac_system_section_definition

Source: 227

Reference path: hvac_system_section_definition <=
product_definition
{product_definition
product_definition.frame_of_reference ->
product_definition_context <=
application_context_element
application_context_element.name = 'functional definition'}

5.1.7.12.1 hvac_section_id

AIM element: product_definition.id

Source: 41

Reference path: hvac_system_section_definition <=
product_definition
product_definition.id

5.1.7.12.2 hvac_system_section to hvac_section_segment

AIM element: PATH

Reference path: hvac_system_section_definition <=
product_definition <-
product_definition_relationship.relating_definition
product_definition_relationship
product_definition_relationship.related_definition ->
product_definition =>
hvac_section_segment_definition

5.1.8 Hybrid_shape_representation UoF

5.1.8.1 B_rep_element

AIM element: manifold_solid_brep

Source: 42

© ISO 2001 – All rights reserved

5.1.8.2 Conic

AIM element: conic

Source: 42

5.1.8.3 Curve

AIM element: curve

Source: 42

5.1.8.4 Free_form_curve

AIM element: b_spline_curve

Source: 42

5.1.8.5 Line

AIM element: line

Source: 42

5.1.8.6 Point

AIM element: point

Source: 42

5.1.8.7 Polygon

AIM element: polyline

Source: 42

5.1.8.8 Surface

AIM element: surface

Source: 42

5.1.8.9 Vector

AIM element: vector

Source: 42

© ISO 2001 – All rights reserved

5.1.8.10 Wire_and_surface_element

AIM element: geometric_representation_item

Source: 42

5.1.9 Piping_component_characterization UoF

5.1.9.1 Base_elbow_support

AIM element: piping_support_definition

Source: 227

Rules: dependent_instantiable_product_context
product_context_discipline_type_constraint
value_for_application_context

Reference path: piping_support_definition <=
product_definition
{piping_support_definition
classification_item = piping_support_definition
classification_item <-
applied_classification_assignment.items[i]
applied_classification_assignment <=
classification_assignment
classification_assignment.assigned_classification ->
[group =>
piping_support_fitting_-class]
[group
(group.name = 'base elbow support')
(group.name = 'eccentric base elbow support')]}
{product_definition
product_definition.formation ->
product_definition_formation
product_definition_formation.of_product ->
[product
classification_item = product
classification_item <-
applied_classification_assignment.items[i]
applied_classification_assignment <=
classification_assignment
classification_assignment.assigned_classification ->
(group)
(group <-
group_relationship.related_group
group_relationship
group_relationship.relating_group ->
group)
group.name = 'piping support']
[product
product.frame_of_reference[i] ->
product_context <=

© ISO 2001 – All rights reserved

application_context_element
application_context_element.name = 'plant item']})

5.1.9.1.1 length

AIM element: [measure_with_unit.value_component]
[measure_with_unit.unit_component]

Source: 41

Rules: subtype_mandatory_shape_representation

Reference path: piping_support_definition <=
product_definition
characterized_product_definition = product_definition
characterized_product_definition
characterized_definition = characterized_product_definition
characterized_definition <-
property_definition.definition
property_definition =>
product_definition_shape <-
shape_aspect.of_shape
[shape_aspect <-
shape_aspect_relationship.relating_shape_aspect]
[shape_aspect <-
shape_aspect_relationship.related_shape_aspect]
shape_aspect_relationship =>
dimensional_location
dimensional_characteristic = dimensional_location
dimensional_characteristic <-
dimensional_characteristic_representation.dimension
dimensional_characteristic_representation
dimensional_characteristic_representation.representation ->
shape_dimension_representation <=
shape_representation <=
{representation
representation.name = 'base elbow support dimensional shape'}
representation
representation.items[i] ->
representation_item =>
{representation_item.name = 'length'}
measure_representation_item <=
{measure_with_unit =>
length_measure_with_unit}
measure_with_unit
[measure_with_unit.value_component]
[measure_with_unit.unit_component]

5.1.9.1.2 adjustability

AIM element: group.description

© ISO 2001 – All rights reserved

Source: 41

Reference path: piping_support_definition
classification_item = piping_support_definition
classification_item <-
applied_classification_assignment.items[i]
applied_classification_assignment <=
classification_assignment
classification_assignment.assigned_classification ->
group
{group =>
piping_support_fitting_class}
group.description
{(group.description = 'adjustable')
(group.description = 'non-adjustable')}

5.1.9.2 Base_line_support

AIM element: piping_support_definition

Source: 227

Rules: dependent_instantiable_product_context
product_context_discipline_type_constraint
value_for_application_context

Reference path: piping_support_definition <=
product_definition
{piping_support_definition
classification_item = piping_support_definition
classification_item <-
applied_classification_assignment.items[i]
applied_classification_assignment <=
classification_assignment
classification_assignment.assigned_classification ->
[group =>
piping_support_fitting_class]
[group
group.name = 'base line support']
{product_definition
product_definition.formation ->
product_definition_formation
product_definition_formation.of_product ->
[product
classification_item = product
classification_item <-
applied_classification_assignment.items[i]
applied_classification_assignment <=
classification_assignment
classification_assignment.assigned_classification ->
(group)
(group <-
group_relationship.related_group
group_relationship

© ISO 2001 – All rights reserved

group_relationship.relating_group ->
group)
group.name = 'piping support']
[product
product.frame_of_reference[i] ->
product_context <=
application_context_element
application_context_element.name = 'plant item']})

5.1.9.2.1 length

AIM element: [measure_with_unit.value_component]
[measure_with_unit.unit_component]

Source: 41

Rules: subtype_mandatory_shape_representation

Reference path: piping_support_definition <=
product_definition
characterized_product_definition = product_definition
characterized_product_definition
characterized_definition = characterized_product_definition
characterized_definition <-
property_definition.definition
property_definition =>
product_definition_shape <-
shape_aspect.of_shape
[shape_aspect <-
shape_aspect_relationship.relating_shape_aspect]
[shape_aspect <-
shape_aspect_relationship.related_shape_aspect]
shape_aspect_relationship =>
dimensional_location
dimensional_characteristic = dimensional_location
dimensional_characteristic <-
dimensional_characteristic_representation.dimension
dimensional_characteristic_representation
dimensional_characteristic_representation.representation ->
shape_dimension_representation <=
shape_representation <=
{representation
representation.name = 'base line support dimensional shape'}
representation
representation.items[i] ->
representation_item =>
{representation_item.name = 'length'}
measure_representation_item <=
{measure_with_unit =>
length_measure_with_unit}
measure_with_unit
[measure_with_unit.value_component]
[measure_with_unit.unit_component]

© ISO 2001 – All rights reserved

5.1.9.2.2 spring

AIM element: group.description

Source: 41

Reference path: piping_support_definition
classification_item = piping_support_definition
classification_item <-
applied_classification_assignment.items[i]
applied_classification_assignment <=
classification_assignment
classification_assignment.assigned_classification ->
group
{[group =>
piping_support_fitting_class]
[group
group.name = ‘base line support’]}
group.description
{(group.description = 'with spring')
(group.description = 'without spring')}

5.1.9.3 Blank

#1: The attributes are for the individual piping component.

#2: The attributes are for the definition of a family of piping components.

AIM element: #1: (piping_component_definition)
#2: (piping_component_class)

Source: 227

Rules: dependent_instantiable_product_context
product_context_discipline_type_constraint
value_for_application_context

Reference path: #1: (piping_component_definition <=
product_definition
{product_definition
product_definition.formation ->
product_definition_formation
product_definition_formation.of_product ->
[product
classification_item = product
classification_item <-
applied_classification_assignment.items[i]
applied_classification_assignment <=
classification_assignment
classification_assignment.assigned_classification ->
(group)
(group <-
group_relationship.related_group
group_relationship

© ISO 2001 – All rights reserved

group_relationship.relating_group ->
group)
group.name= 'blank']
[product
product.frame_of_reference[i] ->
product_context<=
application_context_element
application_context_element.name = 'plant item']})

#2: (piping_component_class <=
[characterized_object]
[group])
227

5.1.9.3.1 outside_diameter

#1: The attributes are for the individual piping component.

#2: The attributes are for the definition of a family of piping components.

AIM element: [measure_with_unit.value_component]
[measure_with_unit.unit_component]

Source: 41

Rules: subtype_exclusive_characterized_object
subtype_mandatory_shape_representation

Reference path: #1: (piping_component_definition <=
product_definition
characterized_product_definition = product_definition
characterized_product_definition
characterized_definition = characterized_product_definition
characterized_definition <-
property_definition.definition
property_definition =>
product_definition_shape <-
shape_aspect.of_shape
shape_aspect <-
dimensional_size.applies_to
dimensional_size
dimensional_characteristic = dimensional_size
dimensional_characteristic <-
dimensional_characteristic_representation.dimension
dimensional_characteristic_representation
dimensional_characteristic_representation.representation ->
shape_dimension_representation <=
shape_representation <=
{representation
representation.name = 'blank fitting dimensional shape'}
representation
representation.items[i] ->
{representation_item

© ISO 2001 – All rights reserved

representation_item.name = 'outside diameter'})
#2: (piping_component_class <=
characterized_object
characterized_definition = characterized_object
characterized_definition <-
property_definition.definition
property_definition
represented_definition = property_definition
represented_definition <-
property_definition_representation.definition
property_definition_representation
property_definition_representation.used_representation ->
{representation
representation.name = 'blank fitting class dimensions'}
representation
(representation.items[i] ->
{representation_item
(representation_item.name = 'maximum outside diameter')
(representation_item.name = 'minimum outside diameter')})
([representation.items[i] ->
{representation_item
representation_item.name = 'maximum outside diameter'}]
[representation.items[i] ->
{representation_item
representation_item.name = 'minimum outside diameter'}]))
representation_item =>
measure_representation_item <=
{measure_with_unit =>
length_measure_with_unit}
measure_with_unit
[measure_with_unit.value_component]
[measure_with_unit.unit_component]

5.1.9.3.2 thickness

#1: The attributes are for the individual piping component.

#2: The attributes are for the definition of a family of piping components.

AIM element: [measure_with_unit.value_component]
[measure_with_unit.unit_component]

Source: 41

Rules: subtype_exclusive_characterized_object
subtype_mandatory_shape_representation

Reference path: #1: (piping_component_definition <=
product_definition
characterized_product_definition = product_definition
characterized_product_definition
characterized_definition = characterized_product_definition
characterized_definition <-
property_definition.definition

© ISO 2001 – All rights reserved

```
property_definition =>
product_definition_shape <-
shape_aspect.of_shape
[shape_aspect <-
shape_aspect_relationship.relating_shape_aspect]
[shape_aspect <-
shape_aspect_relationship.related_shape_aspect]
shape_aspect_relationship =>
dimensional_location
dimensional_characteristic = dimensional_location
dimensional_characteristic <-
dimensional_characteristic_representation.dimension
dimensional_characteristic_representation
dimensional_characteristic_representation.representation ->
shape_dimension_representation <=
shape_representation <=
{representation
representation.name = 'blank fitting dimensional shape'}
representation
representation.items[i] ->
{representation_item
representation_item.name = 'thickness'})
#2: (piping_component_class <=
characterized_object
characterized_definition = characterized_object
characterized_definition <-
property_definition.definition
property_definition
represented_definition = property_definition
represented_definition <-
property_definition_representation.definition
property_definition_representation
property_definition_representation.used_representation ->
{representation
representation.name = 'blank fitting class dimensions'}
representation
(representation.items[i] ->
{representation_item
(representation_item.name = 'maximum thickness')
(representation_item.name = 'minimum thickness')})
([representation.items[i] ->
{representation_item
representation_item.name = 'maximum thickness'}]
[representation.items[i] ->
{representation_item
representation_item.name = 'minimum thickness'}]))
representation_item =>
measure_representation_item <=
{measure_with_unit =>
length_measure_with_unit}
measure_with_unit
[measure_with_unit.value_component]
[measure_with_unit.unit_component]
```


© ISO 2001 – All rights reserved

5.1.9.4 Blind_flange

AIM element: piping_component_definition

Source: 227

Rules: dependent_instantiable_product_context
product_context_discipline_type_constraint
value_for_application_context

Reference path: piping_component_definition <=
product_definition
{piping_component_definition
classification_item = piping_component_definition
classification_item <-
applied_classification_assignment.items[i]
applied_classification_assignment <=
classification_assignment
classification_assignment.assigned_classification ->
[group =>
flange_fitting_class]
[group
group.name = 'blind flange']}
{product_definition
product_definition.formation ->
product_definition_formation
product_definition_formation.of_product ->
[product
classification_item = product
classification_item <-
applied_classification_assignment.items[i]
applied_classification_assignment <=
classification_assignment
classification_assignment.assigned_classification ->
(group)
(group <-
group_relationship.related_group
group_relationship
group_relationship.relating_group ->
group)
group.name= 'flange']
[product
product.frame_of_reference[i] ->
product_context<=
application_context_element
application_context_element.name = 'plant item']})

5.1.9.5 Boss

#1: The attributes are for the individual piping component.

#2: The attributes are for the definition of a family of piping components.

© ISO 2001 – All rights reserved

AIM element: #1: (piping_component_definition)
#2: (piping_component_class)

Source: 227

Rules: dependent_instantiable_product_context
product_context_discipline_type_constraint
value_for_application_context

Reference path: #1: (piping_component_definition <=
{product_definition
product_definition.formation ->
product_definition_formation
product_definition_formation.of_product ->
[product
classification_item = product
classification_item <-
applied_classification_assignment.items[i]
applied_classification_assignment <=
{classification_assignment
classification_assignment.role ->
group_role
group_role.name = 'plant item type'}
classification_assignment
classification_assignment.assigned_classification ->
{group
group.name = 'boss'}
group <-
group_relationship.related_group
group_relationship
group_relationship.relating_group ->
group
group.name = 'olet'}]
[product
product.frame_of_reference[i] ->
product_context<=
application_context_element
application_context_element.name = 'plant item']}
product_definition)
#2: (piping_component_class <=
[characterized_object]
[group])
{[group
group.name = 'boss']
[group <-
group_relationship.related_group
group_relationship
group_relationship.relating_group ->
group
group.name = 'olet']}

© ISO 2001 – All rights reserved

5.1.9.5.1 outside_diameter

AIM element: [measure_with_unit.value_component]
[measure_with_unit.unit_component]

Source: 41

Rules

Reference path: piping_component_definition <=
product_definition
characterized_product_definition = product_definition
characterized_product_definition
characterized_definition = characterized_product_definition
characterized_definition <-
property_definition.definition
property_definition =>
product_definition_shape <-
shape_aspect.of_shape
shape_aspect <-
dimensional_size.applies_to
dimensional_size
dimensional_characteristic = dimensional_size
dimensional_characteristic <-
dimensional_characteristic_representation.dimension
dimensional_characteristic_representation
dimensional_characteristic_representation.representation ->
shape_dimension_representation <=
shape_representation <=
{representation
representation.name = 'olet fitting dimensional shape'}
representation
representation.items[i] ->
{representation_item
representation_item.name = 'boss outside diameter'}

5.1.9.6 Bushing

#1: The attributes are for the individual piping component.

#2: The attributes are for the definition of a family of piping components.

AIM element: #1: (piping_component_definition)
#2: (piping_component_class)

Source: 227

Rules: dependent_instantiable_product_context
product_context_discipline_type_constraint
value_for_application_context

Reference path: #1: (piping_component_definition <=
product_definition
{product_definition

© ISO 2001 – All rights reserved

product_definition.formation ->
product_definition_formation
product_definition_formation.of_product ->
[product
classification_item = product
classification_item <-
applied_classification_assignment.items[i]
applied_classification_assignment <=
classification_assignment
classification_assignment.assigned_classification ->
(group)
(group <-
group_relationship.related_group
group_relationship
group_relationship.relating_group ->
group)
group.name = 'bushing']
[product
product.frame_of_reference[i] ->
product_context<=
application_context_element
application_context_element.name = 'plant item']})#2: (piping_component_class <=
[characterized_object]
[group])
227

5.1.9.6.1 end_1_connector

AIM element: plant_item_connector

Source: 227

Reference path: piping_component_definition <=
product_definition
characterized_product_definition = product_definition
characterized_product_definition
characterized_definition = characterized_product_definition
characterized_definition <-
property_definition.definition
property_definition =>
product_definition_shape <-
shape_aspect.of_shape
{shape_aspect
shape_aspect.description = 'end 1'}
shape_aspect =>
plant_item_connector

5.1.9.6.2 end_2_connector

AIM element: plant_item_connector

Source: 227

© ISO 2001 – All rights reserved

Reference path: piping_component_definition <=
product_definition
characterized_product_definition = product_definition
characterized_product_definition
characterized_definition = characterized_product_definition
characterized_definition <-
property_definition.definition
property_definition =>
product_definition_shape <-
shape_aspect.of_shape
{shape_aspect
shape_aspect.description = 'end 2'}
shape_aspect =>
plant_item_connector

5.1.9.6.3 end_to_end_length

#1: The attributes are for the individual piping component.

#2: The attributes are for the definition of a family of piping components.

AIM element: [measure_with_unit.value_component]
[measure_with_unit.unit_component]

Source: 41

Rules: subtype_exclusive_characterized_object
subtype_mandatory_shape_representation

Reference path: #1: (piping_component_definition <=
product_definition
characterized_product_definition = product_definition
characterized_product_definition
characterized_definition = characterized_product_definition
characterized_definition <-
property_definition.definition
property_definition =>
product_definition_shape <-
shape_aspect.of_shape
[{[shape_aspect =>
plant_item_connector]
[shape_aspect
shape_aspect.description = 'end 1']}
shape_aspect <-
shape_aspect_relationship.relating_shape_aspect]
[{[shape_aspect =>
plant_item_connector]
[shape_aspect
shape_aspect.description = 'end 2']}
shape_aspect <-
shape_aspect_relationship.related_shape_aspect]
shape_aspect_relationship =>
dimensional_location
dimensional_characteristic = dimensional_location

© ISO 2001 – All rights reserved

dimensional_characteristic <-
dimensional_characteristic_representation.dimension
dimensional_characteristic_representation
dimensional_characteristic_representation.representation ->
shape_dimension_representation <=
shape_representation <=
{representation
representation.name = 'bushing fitting dimensional shape'}
representation
representation.items[i] ->
{representation_item
representation_item.name = 'end to end length'})
#2: (piping_component_class <=
characterized_object
characterized_definition = characterized_object
characterized_definition <-
property_definition.definition
property_definition
represented_definition = property_definition
represented_definition <-
property_definition_representation.definition
property_definition_representation
property_definition_representation.used_representation ->
{representation
representation.name = 'bushing fitting class dimensions'}
representation
(representation.items[i] ->
{representation_item
(representation_item.name = 'maximum end to end length')
(representation_item.name = 'minimum end to end length')})
([representation.items[i] ->
{representation_item
representation_item.name = 'maximum end to end length'}]
[representation.items[i] ->
{representation_item
representation_item.name = 'minimum end to end length'}]))
representation_item =>
measure_representation_item <=
{measure_with_unit =>
length_measure_with_unit}
measure_with_unit
[measure_with_unit.value_component]
[measure_with_unit.unit_component]

5.1.9.7 Cap

#1: The attributes are for the individual piping component.

#2: The attributes are for the definition of a family of piping components.

AIM element: #1: (piping_component_definition)
#2: (piping_component_class)

© ISO 2001 – All rights reserved

Source: 227

Rules: dependent_instantiable_product_context
product_context_discipline_type_constraint
value_for_application_context

Reference path: #1: (piping_component_definition <=
product_definition
{piping_component_definition
classification_item = piping_component_definition
classification_item <-
applied_classification_assignment.items[i]
applied_classification_assignment <=
classification_assignment
classification_assignment.assigned_classification ->
[group =>
pipe_closure_fitting_class]
[group
group.name = 'cap']}
{product_definition
product_definition.formation ->
product_definition_formation
product_definition_formation.of_product ->
[product
classification_item = product
classification_item <-
applied_classification_assignment.items[i]
applied_classification_assignment <=
{classification_assignment
classification_assignment.role ->
group_role
group_role.name = 'plant item type'}
classification_assignment
classification_assignment.assigned_classification ->
(group)
(group <-
group_relationship.related_group
group_relationship
group_relationship.relating_group ->
group)
group.name = 'cap'}
[product
product.frame_of_reference[i] ->
product_context<=
application_context_element
application_context_element.name = 'plant item']})
#2: (piping_component_class <=
[characterized_object]
[group])
{[group =>
pipe_closure_fitting_class]
[(group)
(group <-
group_relationship.related_group

© ISO 2001 – All rights reserved

group_relationship
group_relationship.relating_group ->
group)
group.name = 'cap']}

5.1.9.7.1 height

#1: The attributes are for the individual piping component.

#2: The attributes are for the definition of a family of piping components.

AIM element: [measure_with_unit.value_component]
[measure_with_unit.unit_component]

Source: 41

Rules: subtype_exclusive_characterized_object
subtype_mandatory_shape_representation

Reference path: #1: (piping_component_definition <=
product_definition
characterized_product_definition = product_definition
characterized_product_definition
characterized_definition = characterized_product_definition
characterized_definition <-
property_definition.definition
property_definition =>
product_definition_shape <-
shape_aspect.of_shape
[shape_aspect <-
shape_aspect_relationship.relating_shape_aspect]
[shape_aspect <-
shape_aspect_relationship.related_shape_aspect]
shape_aspect_relationship =>
dimensional_location
dimensional_characteristic = dimensional_location
dimensional_characteristic <-
dimensional_characteristic_representation.dimension
dimensional_characteristic_representation
dimensional_characteristic_representation.representation ->
shape_dimension_representation <=
shape_representation <=
{representation
representation.name = 'pipe closure fitting dimensional shape'}
representation
representation.items[i] ->
{representation_item
representation_item.name = 'height'})
#2: (piping_component_class <=
characterized_object
characterized_definition = characterized_object
characterized_definition <-
property_definition.definition
property_definition

© ISO 2001 – All rights reserved

represented_definition = property_definition
represented_definition <-
property_definition_representation.definition
property_definition_representation
property_definition_representation.used_representation ->
{representation
representation.name = 'pipe closure fitting class dimensions'}
representation
(representation.items[i] ->
{representation_item
(representation_item.name = 'maximum height')
(representation_item.name = 'minimum height')})
([representation.items[i] ->
{representation_item
representation_item.name = 'maximum height'}]
[representation.items[i] ->
{representation_item
representation_item.name = 'minimum height'}]))
representation_item =>
measure_representation_item <=
{measure_with_unit =>
length_measure_with_unit}
measure_with_unit
[measure_with_unit.value_component]
[measure_with_unit.unit_component]

5.1.9.8 Compound_bend_pipe

AIM element: piping_component_definition

Source: 227

Rules: dependent_instantiable_product_context
product_context_discipline_type_constraint
value_for_application_context

Reference path: piping_component_definition <=
product_definition
{piping_component_definition
classification_item = piping_component_definition
classification_item <-
applied_classification_assignment.items[i]
applied_classification_assignment <=
classification_assignment
classification_assignment.assigned_classification ->
[group =>
pipe_class]
[group
group.name = 'compound bend pipe']}
{product_definition <-
product_definition_relationship.relating_product_definition
{[product_definition_relationship
product_definition_relationship.name = 'compound bend pipe composition']
[product_definition_relationship

© ISO 2001 – All rights reserved

product_definition_relationship.related_product_definition ->
product_definition =>
piping_component definition
classification_item = piping_component_definition
classification_item <-
applied_classification_assignment.items[i]
applied_classification_assignment <=
classification_assignment
classification_assignment.assigned_classification ->
[group =>
pipe_class]
[group
(group.name = 'mitre bend pipe')
(group.name = 'swept bend pipe')
(group.name = 'straight pipe')]]}
{product_definition
product_definition.formation ->
product_definition_formation
product_definition_formation.of_product ->
[product
classification_item = product
classification_item <-
applied_classification_assignment.items[i]
applied_classification_assignment <=
{classification_assignment
classification_assignment.role ->
group_role
group_role.name = 'plant item type'}
classification_assignment
classification_assignment.assigned_classification ->
(group)
(group <-
group_relationship.related_group
group_relationship
group_relationship.relating_group ->
group)
group.name = 'pipe']
[product
product.frame_of_reference[i] ->
product_context<=
application_context_element
application_context_element.name = 'plant item']}

5.1.9.9 Coupling

#1: The attributes are for the individual piping component.

#2: The attributes are for the definition of a family of piping components.

AIM element: #1: (piping_component_definition)
#2: (piping_component_class)

Source: 227

Rules: dependent_instantiable_product_context

© ISO 2001 – All rights reserved

product_context_discipline_type_constraint
value_for_application_context

Reference path: #1: (piping_component_definition <=
product_definition
{product_definition
product_definition.formation ->
product_definition_formation
product_definition_formation.of_product ->
[product
classification_item = product
classification_item <-
applied_classification_assignment.items[i]
applied_classification_assignment <=
classification_assignment
classification_assignment.assigned_classification ->
(group)
(group <-
group_relationship.related_group
group_relationship
group_relationship.relating_group ->
group)
group.name = 'coupling']
[product
product.frame_of_reference[i] ->
product_context<=
application_context_element
application_context_element.name = 'plant item']})
#2: (piping_component_class <=
[characterized_object]
[group])
227

5.1.9.9.1 end_1_connector

AIM element: plant_item_connector

Source: 227

Reference path: piping_component_definition <=
product_definition
characterized_product_definition = product_definition
characterized_product_definition
characterized_definition = characterized_product_definition
characterized_definition <-
property_definition.definition
property_definition =>
product_definition_shape <-
shape_aspect.of_shape
{shape_aspect
shape_aspect.description = 'end 1'}
shape_aspect =>
plant_item_connector

© ISO 2001 – All rights reserved

5.1.9.9.2 end_2_connector

AIM element: plant_item_connector

Source: 227

Reference path: piping_component_definition <=
product_definition
characterized_product_definition = product_definition
characterized_product_definition
characterized_definition = characterized_product_definition
characterized_definition <-
property_definition.definition
property_definition =>
product_definition_shape <-
shape_aspect.of_shape
{shape_aspect
shape_aspect.description = 'end 2'}
shape_aspect =>
plant_item_connector

5.1.9.9.3 end_to_end_length

#1: The attributes are for the individual piping component.

#2: The attributes are for the definition of a family of piping components.

AIM element: [measure_with_unit.value_component]
[measure_with_unit.unit_component]

Source: 41

Rules: subtype_exclusive_characterized_object
subtype_mandatory_shape_representation

Reference path: #1: (piping_component_definition <=
product_definition
characterized_product_definition = product_definition
characterized_product_definition
characterized_definition = characterized_product_definition
characterized_definition <-
property_definition.definition
property_definition =>
product_definition_shape <-
shape_aspect.of_shape
[{[shape_aspect =>
plant_item_connector]
[shape_aspect
shape_aspect.description = 'end 1']}
shape_aspect <-
shape_aspect_relationship.relating_shape_aspect]
[{[shape_aspect =>
plant_item_connector]
[shape_aspect

© ISO 2001 – All rights reserved

```
shape_aspect.description = 'end 2']}
shape_aspect <-
shape_aspect_relationship.related_shape_aspect]
shape_aspect_relationship =>
dimensional_location
dimensional_characteristic = dimensional_location
dimensional_characteristic <-
dimensional_characteristic_representation.dimension
dimensional_characteristic_representation
dimensional_characteristic_representation.representation ->
shape_dimension_representation <=
shape_representation <=
{representation
representation.name = 'coupling fitting dimensional shape'}
representation
representation.items[i] ->
{representation_item
representation_item.name = 'end to end length'})
#2: (piping_component_class <=
characterized_object
characterized_definition = characterized_object
characterized_definition <-
property_definition.definition
property_definition
represented_definition = property_definition
represented_definition <-
property_definition_representation.definition
property_definition_representation
property_definition_representation.used_representation ->
{representation
representation.name = 'coupling fitting class dimensions'}
representation
(representation.items[i] ->
{representation_item
(representation_item.name = 'maximum end to end length')
(representation_item.name = 'minimum end to end length')})
([representation.items[i] ->
{representation_item
representation_item.name = 'maximum end to end length'}]
[representation.items[i] ->
{representation_item
representation_item.name = 'minimum end to end length'}]))
representation_item =>
measure_representation_item <=
{measure_with_unit =>
length_measure_with_unit}
measure_with_unit
[measure_with_unit.value_component]
[measure_with_unit.unit_component]
```

5.1.9.10 Cross

© ISO 2001 – All rights reserved

#1: The attributes are for the individual piping component.

#2: The attributes are for the definition of a family of piping components.

AIM element: #1: (piping_component_definition)
#2: (piping_component_class)

Source: 227

Rules: dependent_instantiable_product_context
product_context_discipline_type_constraint
value_for_application_context

Reference path: #1: (piping_component_definition <=
product_definition
{product_definition
product_definition.formation ->
product_definition_formation
product_definition_formation.of_product ->
[product
classification_item = product
classification_item <-
applied_classification_assignment.items[i]
applied_classification_assignment <=
classification_assignment
classification_assignment.assigned_classification ->
(group)
(group <-
group_relationship.related_group
group_relationship
group_relationship.relating_group ->
group)
group.name = 'cross']
[product
product.frame_of_reference[i] ->
product_context<=
application_context_element
application_context_element.name = 'plant item']})
#2: (piping_component_class <=
[characterized_object]
[group])
227

5.1.9.10.1 centre_to_end_1_length

#1: The attributes are for the individual piping component.

#2: The attributes are for the definition of a family of piping components.

AIM element: [measure_with_unit.value_component]
[measure_with_unit.unit_component]

Source: 41

© ISO 2001 – All rights reserved

Rules: subtype_exclusive_characterized_object
subtype_mandatory_shape_representation

Reference path: #1: (piping_component_definition <=
product_definition
characterized_product_definition = product_definition
characterized_product_definition
characterized_definition = characterized_product_definition
characterized_definition <-
property_definition.definition
property_definition =>
product_definition_shape <-
[shape_aspect.of_shape
{shape_aspect
shape_aspect.description = 'centre'}
shape_aspect <-
shape_aspect_relationship.relating_shape_aspect]
[shape_aspect.of_shape
{[shape_aspect =>
plant_item_connector]
[shape_aspect
shape_aspect.description = 'end 1']}
shape_aspect <-
shape_aspect_relationship.related_shape_aspect]
shape_aspect_relationship =>
dimensional_location
dimensional_characteristic = dimensional_location
dimensional_characteristic <-
dimensional_characteristic_representation.dimension
dimensional_characteristic_representation
dimensional_characteristic_representation.representation ->
shape_dimension_representation <=
shape_representation <=
{representation
representation.name = 'cross fitting dimensional shape'}
representation
representation.items[i] ->
{representation_item
representation_item.name = 'centre to end 1 length'})
#2: (piping_component_class <=
characterized_object
characterized_definition = characterized_object
characterized_definition <-
property_definition.definition
property_definition
represented_definition = property_definition
represented_definition <-
property_definition_representation.definition
property_definition_representation
property_definition_representation.used_representation ->
{representation
representation.name = 'cross fitting class dimensions'}
representation
(representation.items[i] ->

© ISO 2001 – All rights reserved

{representation_item
(representation_item.name = 'maximum centre to end 1 length')
(representation_item.name = 'minimum centre to end 1 length')})
([representation.items[i] ->
{representation_item
representation_item.name = 'maximum centre to end 1 length'}]
[representation.items[i] ->
{representation_item
representation_item.name = 'minimum centre to end 1 length'}]))
representation_item =>
measure_representation_item <=
{measure_with_unit =>
length_measure_with_unit}
measure_with_unit
[measure_with_unit.value_component]
[measure_with_unit.unit_component]

5.1.9.10.2 centre_to_end_2_length

#1: The attributes are for the individual piping component.

#2: The attributes are for the definition of a family of piping components.

AIM element: [measure_with_unit.value_component]
[measure_with_unit.unit_component]

Source: 41

Rules: subtype_exclusive_characterized_object
subtype_mandatory_shape_representation

Reference path: #1: (piping_component_definition <=
product_definition
characterized_product_definition = product_definition
characterized_product_definition
characterized_definition = characterized_product_definition
characterized_definition <-
property_definition.definition
property_definition =>
product_definition_shape <-
[shape_aspect.of_shape
{shape_aspect
shape_aspect.description = 'centre'}
shape_aspect <-
shape_aspect_relationship.relating_shape_aspect]
[shape_aspect.of_shape
{[shape_aspect =>
plant_item_connector]
[shape_aspect
shape_aspect.description = 'end 2']}
shape_aspect <-
shape_aspect_relationship.related_shape_aspect]
shape_aspect_relationship =>
dimensional_location

© ISO 2001 – All rights reserved

```
dimensional_characteristic = dimensional_location
dimensional_characteristic <-
dimensional_characteristic_representation.dimension
dimensional_characteristic_representation
dimensional_characteristic_representation.representation ->
shape_dimension_representation <=
shape_representation <=
{representation
representation.name = 'cross fitting dimensional shape'}

representation
representation.items[i] ->
{representation_item
representation_item.name = 'centre to end 2 length'})
#2: (piping_component_class <=
characterized_object
characterized_definition = characterized_object
characterized_definition <-
property_definition.definition
property_definition
represented_definition = property_definition
represented_definition <-
property_definition_representation.definition
property_definition_representation
property_definition_representation.used_representation ->
{representation
representation.name = 'cross fitting class dimensions'}
representation
(representation.items[i] ->
{representation_item
(representation_item.name = 'maximum centre to end 2 length')
(representation_item.name = 'minimum centre to end 2 length')})
([representation.items[i] ->
{representation_item
representation_item.name = 'maximum centre to end 2 length'}]
[representation.items[i] ->
{representation_item
representation_item.name = 'minimum centre to end 2 length'}]))
representation_item =>
measure_representation_item <=
{measure_with_unit =>
length_measure_with_unit}
measure_with_unit
[measure_with_unit.value_component]
[measure_with_unit.unit_component]
```

5.1.9.10.3 centre_to_end_3_length

#1: The attributes are for the individual piping component.

#2: The attributes are for the definition of a family of piping components.

AIM element: [measure_with_unit.value_component]

© ISO 2001 – All rights reserved

[measure_with_unit.unit_component]

Source: 41

Rules: subtype_exclusive_characterized_object
subtype_mandatory_shape_representation

Reference path: #1: (piping_component_definition <=
product_definition
characterized_product_definition = product_definition
characterized_product_definition
characterized_definition = characterized_product_definition
characterized_definition <-
property_definition.definition
property_definition =>
product_definition_shape <-
[shape_aspect.of_shape
{shape_aspect
shape_aspect.description = 'centre'}
shape_aspect <-
shape_aspect_relationship.relating_shape_aspect]
[shape_aspect.of_shape
{[shape_aspect =>
plant_item_connector]
[shape_aspect
shape_aspect.description = 'end 3']}
shape_aspect <-
shape_aspect_relationship.related_shape_aspect]
shape_aspect_relationship =>
dimensional_location
dimensional_characteristic = dimensional_location
dimensional_characteristic <-
dimensional_characteristic_representation.dimension
dimensional_characteristic_representation
dimensional_characteristic_representation.representation ->
shape_dimension_representation <=
shape_representation <=
{representation
representation.name = 'cross fitting dimensional shape'}
representation
representation.items[i] ->
{representation_item
representation_item.name = 'centre to end 3 length'})
#2: (piping_component_class <=
characterized_object
characterized_definition = characterized_object
characterized_definition <-
property_definition.definition
property_definition
represented_definition = property_definition
represented_definition <-
property_definition_representation.definition
property_definition_representation
property_definition_representation.used_representation ->

© ISO 2001 – All rights reserved

{representation
representation.name = 'cross fitting class dimensions'}
representation
(representation.items[i] ->
{representation_item
(representation_item.name = 'maximum centre to end 3 length')
(representation_item.name = 'minimum centre to end 3 length')})
([representation.items[i] ->
{representation_item
representation_item.name = 'maximum centre to end 3 length'}]
[representation.items[i] ->
{representation_item
representation_item.name = 'minimum centre to end 3 length'}]))
representation_item =>
measure_representation_item <=
{measure_with_unit =>
length_measure_with_unit}
measure_with_unit
[measure_with_unit.value_component]
[measure_with_unit.unit_component]
representation

5.1.9.10.4 centre_to_end_4_length

#1: The attributes are for the individual piping component.

#2: The attributes are for the definition of a family of piping components.

AIM element: [measure_with_unit.value_component]
[measure_with_unit.unit_component]

Source: 41

Rules: subtype_exclusive_characterized_object
subtype_mandatory_shape_representation

Reference path: #1: (piping_component_definition <=
product_definition
characterized_product_definition = product_definition
characterized_product_definition
characterized_definition = characterized_product_definition
characterized_definition <-
property_definition.definition
property_definition =>
product_definition_shape <-
[shape_aspect.of_shape
{shape_aspect
shape_aspect.description = 'centre'}
shape_aspect <-
shape_aspect_relationship.relating_shape_aspect]
[shape_aspect.of_shape
{[shape_aspect =>
plant_item_connector]
[shape_aspect

© ISO 2001 – All rights reserved

```
shape_aspect.description = 'end 4']}
shape_aspect <-
shape_aspect_relationship.related_shape_aspect]
shape_aspect_relationship =>
dimensional_location
dimensional_characteristic = dimensional_location
dimensional_characteristic <-
dimensional_characteristic_representation.dimension
dimensional_characteristic_representation
dimensional_characteristic_representation.representation ->
shape_dimension_representation <=
shape_representation <=
{representation
representation.name = 'cross fitting dimensional shape'}

representation
representation.items[i] ->
{representation_item
representation_item.name = 'centre to end 4 length'})
#2: (piping_component_class <=
characterized_object
characterized_definition = characterized_object
characterized_definition <-
property_definition.definition
property_definition
represented_definition = property_definition
represented_definition <-
property_definition_representation.definition
property_definition_representation
property_definition_representation.used_representation ->
{representation
representation.name = 'cross fitting class dimensions'}
representation
(representation.items[i] ->
{representation_item
(representation_item.name = 'maximum centre to end 4 length')
(representation_item.name = 'minimum centre to end 4 length')})
([representation.items[i] ->
{representation_item
representation_item.name = 'maximum centre to end 4 length'}]
[representation.items[i] ->
{representation_item
representation_item.name = 'minimum centre to end 4 length'}]))
representation_item =>
measure_representation_item <=
{measure_with_unit =>
length_measure_with_unit}
measure_with_unit
[measure_with_unit.value_component]
[measure_with_unit.unit_component]
```

5.1.9.10.5 end_1_connector

© ISO 2001 – All rights reserved

AIM element: plant_item_connector

Source: 227

Reference path: piping_component_definition <=
product_definition
characterized_product_definition = product_definition
characterized_product_definition
characterized_definition = characterized_product_definition
characterized_definition <-
property_definition.definition
property_definition =>
product_definition_shape <-
shape_aspect.of_shape
{shape_aspect
shape_aspect.description = 'end 1'}
shape_aspect =>
plant_item_connector

5.1.9.10.6 end_2_connector

AIM element: plant_item_connector

Source: 227

Reference path: piping_component_definition <=
product_definition
characterized_product_definition = product_definition
characterized_product_definition
characterized_definition = characterized_product_definition
characterized_definition <-
property_definition.definition
property_definition =>
product_definition_shape <-
shape_aspect.of_shape
{shape_aspect
shape_aspect.description = 'end 2'}
shape_aspect =>
plant_item_connector

5.1.9.10.7 end_3_connector

AIM element: plant_item_connector

Source: 227

Reference path: piping_component_definition <=
product_definition
characterized_product_definition = product_definition
characterized_product_definition
characterized_definition = characterized_product_definition
characterized_definition <-
property_definition.definition

© ISO 2001 – All rights reserved

property_definition =>
product_definition_shape <-
shape_aspect.of_shape
{shape_aspect
shape_aspect.description = 'end 3'}
shape_aspect =>
plant_item_connector

5.1.9.10.8 end_4_connector

AIM element: plant_item_connector

Source: 227

Reference path: piping_component_definition <=
product_definition
characterized_product_definition = product_definition
characterized_product_definition
characterized_definition = characterized_product_definition
characterized_definition <-
property_definition.definition
property_definition =>
product_definition_shape <-
shape_aspect.of_shape
{shape_aspect
shape_aspect.description = 'end 4'}
shape_aspect =>
plant_item_connector

5.1.9.11 Dummy_leg

AIM element: piping_support_definition

Source: 227

Rules: dependent_instantiable_product_context
product_context_discipline_type_constraint
value_for_application_context

Reference path: piping_support_definition <=
product_definition
{piping_support_definition
classification_item = piping_support_definition
classification_item <-
applied_classification_assignment.items[i]
applied_classification_assignment <=
classification_assignment
classification_assignment.assigned_classification ->
[group =>
piping_support_fitting_-class]
[group
group.name = 'dummy leg']}
{product_definition

© ISO 2001 – All rights reserved

product_definition.formation ->
product_definition_formation
product_definition_formation.of_product ->
[product
classification_item = product
classification_item <-
applied_classification_assignment.items[i]
applied_classification_assignment <=
classification_assignment
classification_assignment.assigned_classification ->
(group)
(group <-
group_relationship.related_group
group_relationship
group_relationship.relating_group ->
group)
group.name = 'piping support']
[product
product.frame_of_reference[i] ->
product_context <=
application_context_element
application_context_element.name = 'plant item']})

5.1.9.11.1 length

AIM element: [measure_with_unit.value_component]
[measure_with_unit.unit_component]

Source: 41

Rules: subtype_mandatory_shape_representation

Reference path: piping_support_definition <=
product_definition
characterized_product_definition = product_definition
characterized_product_definition
characterized_definition = characterized_product_definition
characterized_definition <-
property_definition.definition
property_definition =>
product_definition_shape <-
shape_aspect.of_shape
[shape_aspect <-
shape_aspect_relationship.relating_shape_aspect]
[shape_aspect <-
shape_aspect_relationship.related_shape_aspect]
shape_aspect_relationship =>
dimensional_location
dimensional_characteristic = dimensional_location
dimensional_characteristic <-
dimensional_characteristic_representation.dimension
dimensional_characteristic_representation
dimensional_characteristic_representation.representation ->
shape_dimension_representation <=

© ISO 2001 – All rights reserved

shape_representation <=
{representation
representation.name = 'dummy leg dimensional shape'}
representation
representation.items[i] ->
representation_item =>
{representation_item.name = 'length'}
measure_representation_item <=
{measure_with_unit =>
length_measure_with_unit}
measure_with_unit
[measure_with_unit.value_component]
[measure_with_unit.unit_component]

5.1.9.12 Eccentric_base_elbow_support

AIM element: piping_support_definition

Source: 227

Rules: dependent_instantiable_product_context
product_context_discipline_type_constraint
value_for_application_context

Reference path: piping_support_definition <=
product_definition
{piping_support_definition
classification_item = piping_support_definition
classification_item <-
applied_classification_assignment.items[i]
applied_classification_assignment <=
classification_assignment
classification_assignment.assigned_classification ->
[group =>
piping_support_fitting_-class]
[group
group.name = 'eccentric base elbow support']}
{product_definition
product_definition.formation ->
product_definition_formation
product_definition_formation.of_product ->
[product
classification_item = product
classification_item <-
applied_classification_assignment.items[i]
applied_classification_assignment <=
classification_assignment
classification_assignment.assigned_classification ->
(group)
(group <-
group_relationship.related_group
group_relationship
group_relationship.relating_group ->
group)

© ISO 2001 – All rights reserved

group.name = 'piping support']
[product
product.frame_of_reference[i] ->
product_context <=
application_context_element
application_context_element.name = 'plant item']})

5.1.9.12.1 offset

AIM element: [measure_with_unit.value_component]
[measure_with_unit.unit_component]

Source: 41

Rules: subtype_mandatory_shape_representation

Reference path piping_support_definition <=
product_definition
characterized_product_definition = product_definition
characterized_product_definition
characterized_definition = characterized_product_definition
characterized_definition <-
property_definition.definition
property_definition =>
product_definition_shape <-
shape_aspect.of_shape
[{shape_aspect.description = 'location point'}
shape_aspect <-
shape_aspect_relationship.relating_shape_aspect]
[{shape_aspect.description = 'centreline'}
shape_aspect <-
shape_aspect_relationship.related_shape_aspect]
shape_aspect_relationship =>
dimensional_location
dimensional_characteristic = dimensional_location
dimensional_characteristic <-
dimensional_characteristic_representation.dimension
dimensional_characteristic_representation
dimensional_characteristic_representation.representation ->
shape_dimension_representation <=
shape_representation <=
{representation
representation.name = 'eccentric base elbow support dimensional shape'}
representation
representation.items[i] ->
representation_item =>
{representation_item.name = 'offset'}
measure_representation_item <=
{measure_with_unit =>
length_measure_with_unit}
measure_with_unit
[measure_with_unit.value_component]
[measure_with_unit.unit_component]

© ISO 2001 – All rights reserved

5.1.9.12.2 root_orientation

AIM element: axis2_placement_3d.ref_direction

Source: 42

Reference path: product
product_definition_formation.of_product
product_definition_formation
product_definition.formation
product_definition
characterized_product_definition = product_definition
characterized_product_definition
characterized_definition = characterized_product_definition
characterized_definition <-
property_definition.definition
property_definition =>
product_definition_shape <-
shape_aspect.of_shape
shape_aspect
represented_definition = shape_aspect
represented_definition <-
property_definition_representation.definition
property_definition_representation
property_definition_representation.used_representation ->
representation
representation.items[i] ->
{representation_item
representation_item.name = 'root orientation'}
representation_item =>
geometric_representation_item =>
placement =>
axis2_placement_3d
axis2_placement_3d.ref_direction

5.1.9.13 Eccentric_reducer

AIM element: piping_component_definition

Source: 227

Rules: dependent_instantiable_product_context
product_context_discipline_type_constraint
value_for_application_context

Reference path: piping_component_definition <=
product_definition
{piping_component_definition
classification_item = piping_component_definition
classification_item <-
applied_classification_assignment.items[i]
applied_classification_assignment <=
classification_assignment
classification_assignment.assigned_classification ->

© ISO 2001 – All rights reserved

[group =>
reducer_fitting_class]
[group
group.name = 'eccentric reducer']}
{product_definition
product_definition.formation ->
product_definition_formation
product_definition_formation.of_product ->
[product
classification_item = product
classification_item <-
applied_classification_assignment.items[i]
applied_classification_assignment <=
classification_assignment
classification_assignment.assigned_classification ->
(group)
(group <-
group_relationship.related_group
group_relationship
group_relationship.relating_group ->
group)
group.name = 'reducer']
[product
product.frame_of_reference[i] ->
product_context<=
application_context_element
application_context_element.name = 'plant item']}

5.1.9.13.1 centreline_offset

AIM element: [measure_with_unit.value_component]
[measure_with_unit.unit_component]

Source: 41

Rules: subtype_mandatory_shape_representation

Reference path: piping_component_definition <=
product_definition
characterized_product_definition = product_definition
characterized_product_definition
characterized_definition = characterized_product_definition
characterized_definition <-
property_definition.definition
property_definition =>
product_definition_shape <-
[shape_aspect.of_shape
{shape_aspect shape_aspect.description = 'centre'}
shape_aspect <-
shape_aspect_relationship.relating_shape_aspect]
[shape_aspect.of_shape
{shape_aspect
shape_aspect.description = 'centre'}
shape_aspect <-

© ISO 2001 – All rights reserved

shape_aspect_relationship.related_shape_aspect]
shape_aspect_relationship =>
dimensional_location
dimensional_characteristic = dimensional_location
dimensional_characteristic <-
dimensional_characteristic_representation.dimension
dimensional_characteristic_representation
dimensional_characteristic_representation.representation ->
shape_dimension_representation <=
shape_representation <=
{representation
representation.name = 'reducer fitting dimensional shape'}
representation
representation.items[i] ->
{representation_item
representation_item.name = 'centreline offset'}
representation_item =>
measure_representation_item <=

{measure_with_unit =>
length_measure_with_unit}
measure_with_unit
[measure_with_unit.value_component]
[measure_with_unit.unit_component]

5.1.9.13.2 flat_side_orientation

AIM element: shape_aspect.description

Source: 41

Reference path: piping_component_definition <=
product_definition
characterized_product_definition = product_definition
characterized_product_definition
characterized_definition = characterized_product_definition
characterized_definition <-
property_definition.definition
property_definition =>
product_definition_shape <-
shape_aspect.of_shape
{shape_aspect
shape_aspect.name = 'flat side'}
shape_aspect

5.1.9.14 Elbow

#1: The attributes are for the individual piping component.

#2: The attributes are for the definition of a family of piping components.

AIM element: #1: (piping_component_definition)

© ISO 2001 – All rights reserved

#2: (piping_component_class)

Source: 227

Rules: dependent_instantiable_product_context
product_context_discipline_type_constraint
value_for_application_context

Reference path: #1: (piping_component_definition <=
product_definition
{product_definition
product_definition.formation ->
product_definition_formation
product_definition_formation.of_product ->
[product
classification_item = product
classification_item <-
applied_classification_assignment.items[i]
applied_classification_assignment <=
classification_assignment
classification_assignment.assigned_classification ->
(group)
(group <-
group_relationship.related_group
group_relationship
group_relationship.relating_group ->
group)
group.name = 'elbow']
[product
product.frame_of_reference[i] ->
product_context<=
application_context_element
application_context_element.name = 'plant item']})
#2: (piping_component_class <=
[characterized_object]
[group])
227

5.1.9.14.1 centre_to_end_1_length

#1: The attributes are for the individual piping component.

#2: The attributes are for the definition of a family of piping components.

AIM element: [measure_with_unit.value_component]
[measure_with_unit.unit_component]

Source: 41

Rules: subtype_exclusive_characterized_object
subtype_mandatory_shape_representation

Reference path: #1: (piping_component_definition <=
product_definition

© ISO 2001 – All rights reserved

```
characterized_product_definition = product_definition
characterized_product_definition
characterized_definition = characterized_product_definition
characterized_definition <-
property_definition.definition
property_definition =>
product_definition_shape <-
[shape_aspect.of_shape
{shape_aspect
shape_aspect.description = 'centre'}
shape_aspect <-
shape_aspect_relationship.relating_shape_aspect]
[shape_aspect.of_shape
{[shape_aspect =>
plant_item_connector]
[shape_aspect
shape_aspect.description = 'end 1']}
shape_aspect <-
shape_aspect_relationship.related_shape_aspect]
shape_aspect_relationship =>
dimensional_location
dimensional_characteristic = dimensional_location
dimensional_characteristic <-
dimensional_characteristic_representation.dimension
dimensional_characteristic_representation
dimensional_characteristic_representation.representation ->
shape_dimension_representation <=
shape_representation <=
{representation
representation.name = 'elbow fitting dimensional shape'}
representation
representation.items[i] ->
{representation_item
representation_item.name = 'centre to end 1 length'})
#2: (piping_component_class <=
characterized_object
characterized_definition = characterized_object
characterized_definition <-
property_definition.definition
property_definition
represented_definition = property_definition
represented_definition <-
property_definition_representation.definition
property_definition_representation
property_definition_representation.used_representation ->
{representation
representation.name = 'elbow fitting class dimensions'}
representation
(representation.items[i] ->
{representation_item
(representation_item.name = 'maximum centre to end 1 length')
(representation_item.name = 'minimum centre to end 1 length')})
([representation.items[i] ->
{representation_item
```


© ISO 2001 – All rights reserved

representation_item.name = 'maximum centre to end 1 length'}]
[representation.items[i] ->
{representation_item
representation_item.name = 'minimum centre to end 1 length'}]))
representation_item =>
measure_representation_item <=
{measure_with_unit =>
length_measure_with_unit}
measure_with_unit
[measure_with_unit.value_component]
[measure_with_unit.unit_component]

5.1.9.14.2 centre_to_end_2_length

#1: The attributes are for the individual piping component.

#2: The attributes are for the definition of a family of piping components.

AIM element: [measure_with_unit.value_component]
[measure_with_unit.unit_component]

Source: 41

Rules: subtype_exclusive_characterized_object
subtype_mandatory_shape_representation

Reference path: #1: (piping_component_definition <=
product_definition
characterized_product_definition = product_definition
characterized_product_definition
characterized_definition = characterized_product_definition
characterized_definition <-
property_definition.definition
property_definition =>
product_definition_shape <-
[shape_aspect.of_shape
{shape_aspect
shape_aspect.description = 'centre'}
shape_aspect <-
shape_aspect_relationship.relating_shape_aspect]
[shape_aspect.of_shape
{[shape_aspect =>
plant_item_connector]
[shape_aspect
shape_aspect.description = 'end 2']}
shape_aspect <-
shape_aspect_relationship.related_shape_aspect]
shape_aspect_relationship =>
dimensional_location
dimensional_characteristic = dimensional_location
dimensional_characteristic <-
dimensional_characteristic_representation.dimension
dimensional_characteristic_representation
dimensional_characteristic_representation.representation ->

© ISO 2001 – All rights reserved

shape_dimension_representation <=
shape_representation <=
{representation
representation.name = 'elbow fitting dimensional shape'}
representation
representation.items[i] ->
{representation_item
representation_item.name = 'centre to end 2 length'})
#2: (piping_component_class <=
characterized_object
characterized_definition = characterized_object
characterized_definition <-
property_definition.definition
property_definition
represented_definition = property_definition
represented_definition <-
property_definition_representation.definition
property_definition_representation
property_definition_representation.used_representation ->
{representation
representation.name = 'elbow fitting class dimensions'}
representation
(representation.items[i] ->
{representation_item
(representation_item.name = 'maximum centre to end 2 length')
(representation_item.name = 'minimum centre to end 2 length')})
([representation.items[i] ->
{representation_item
representation_item.name = 'maximum centre to end 2 length'}]
[representation.items[i] ->
{representation_item
representation_item.name = 'minimum centre to end 2 length'}]))
representation_item =>
measure_representation_item <=
{measure_with_unit =>
length_measure_with_unit}
measure_with_unit
[measure_with_unit.value_component]
[measure_with_unit.unit_component]

5.1.9.14.3 centreline_radius

#1: The attributes are for the individual piping component.

#2: The attributes are for the definition of a family of piping components.

AIM element: [measure_with_unit.value_component]
[measure_with_unit.unit_component]

Source: 41

Rules: subtype_exclusive_characterized_object
subtype_mandatory_shape_representation

© ISO 2001 – All rights reserved

Reference path: #1: (piping_component_definition <=
product_definition
characterized_product_definition = product_definition
characterized_product_definition
characterized_definition = characterized_product_definition
characterized_definition <-
property_definition.definition
property_definition =>
product_definition_shape <-
[shape_aspect.of_shape
{shape_aspect shape_aspect.description = 'inner bend centre point'}
shape_aspect <-
shape_aspect_relationship.relating_shape_aspect]
[shape_aspect.of_shape
{shape_aspect shape_aspect.name = 'sweep angle centre point'}
shape_aspect <-
shape_aspect_relationship.related_shape_aspect]
shape_aspect_relationship =>
dimensional_location
dimensional_characteristic = dimensional_location
dimensional_characteristic <-
dimensional_characteristic_representation.dimension
dimensional_characteristic_representation
dimensional_characteristic_representation.representation ->
shape_dimension_representation <=
shape_representation <=
{representation
representation.name = 'elbow fitting dimensional shape'}
representation
representation.items[i] ->
{representation_item
representation_item.name = 'centreline radius'
#2:(piping_component_class <=
characterized_object
characterized_definition = characterized_object
characterized_definition <-
property_definition.definition
property_definition
represented_definition = property_definition
represented_definition <-
property_definition_representation.definition
property_definition_representation
property_definition_representation.used_representation ->
{representation
representation.name = 'elbow fitting class dimensions'}
representation
(representation.items[i] ->
{representation_item
(representation_item.name = 'maximum centreline radius')
(representation_item.name = 'minimum centreline radius')})
([representation.items[i] ->
{representation_item
representation_item.name = 'maximum centreline radius'}]
[representation.items[i] ->

© ISO 2001 – All rights reserved

{representation_item
representation_item.name = 'minimum centreline radius'}]))
representation_item =>
measure_representation_item <=
{measure_with_unit =>
length_measure_with_unit}
measure_with_unit
[measure_with_unit.value_component]
[measure_with_unit.unit_component]

5.1.9.14.4 end_1_connector

AIM element: plant_item_connector

Source: 227

Reference path: piping_component_definition <=
product_definition
characterized_product_definition = product_definition
characterized_product_definition
characterized_definition = characterized_product_definition
characterized_definition <-
property_definition.definition
property_definition =>
product_definition_shape <-
shape_aspect.of_shape
{shape_aspect
shape_aspect.description = 'end 1'}
shape_aspect =>
plant_item_connector

5.1.9.14.5 end_2_connector

AIM element: plant_item_connector

Source: 227

Reference path: piping_component_definition <=
product_definition
characterized_product_definition = product_definition
characterized_product_definition
characterized_definition = characterized_product_definition
characterized_definition <-
property_definition.definition
property_definition =>
product_definition_shape <-
shape_aspect.of_shape
{shape_aspect
shape_aspect.description = 'end 2'}
shape_aspect =>
plant_item_connector

© ISO 2001 – All rights reserved

5.1.9.14.6 sweep_angle

#1: The attributes are for the individual piping component.

#2: The attributes are for the definition of a family of piping components.

AIM element: [measure_with_unit.value_component]
[measure_with_unit.unit_component]

Source: 41

Rules: subtype_exclusive_characterized_object
subtype_mandatory_shape_representation

Reference path: #1: (piping_component_definition <=
product_definition
characterized_product_definition = product_definition
characterized_product_definition
characterized_definition = characterized_product_definition
characterized_definition <-
property_definition.definition
property_definition =>
product_definition_shape <-
shape_aspect.of_shape
[shape_aspect <-
shape_aspect_relationship.relating_shape_aspect]
[shape_aspect <-
shape_aspect_relationship.related_shape_aspect]
shape_aspect_relationship =>
{dimensional_location =>
angular_location}
dimensional_location
dimensional_characteristic = dimensional_location
dimensional_characteristic <-
dimensional_characteristic_representation.dimension
dimensional_characteristic_representation
dimensional_characteristic_representation.representation ->
shape_dimension_representation <=
shape_representation <=
{representation
representation.name = 'elbow fitting dimensional shape'}
representation
representation.items[i] ->
{representation_item
representation_item.name = 'sweep angle'})
#2: (piping_component_class <=
characterized_object
characterized_definition = characterized_object
characterized_definition <-
property_definition.definition
property_definition
represented_definition = property_definition
represented_definition <-
property_definition_representation.definition

© ISO 2001 – All rights reserved

property_definition_representation
property_definition_representation.used_representation ->
{representation
representation.name = 'elbow fitting class dimensions'}
representation
(representation.items[i] ->
{representation_item
(representation_item.name = 'maximum sweep angle')
(representation_item.name = 'minimum sweep angle')})
([representation.items[i] ->
{representation_item
representation_item.name = 'maximum sweep angle'}]
[representation.items[i] ->
{representation_item
representation_item.name = 'minimum sweep angle'}]))
representation_item =>
measure_representation_item <=
{measure_with_unit =>
plane_angle_measure_with_unit}
measure_with_unit
[measure_with_unit.value_component]
[measure_with_unit.unit_component]

5.1.9.14.7 type

AIM element: group.name

Source: 41

Reference path: piping_component_definition
classification_item = piping_component_definition
classification_item <-
applied_classification_assignment.items[i]
applied_classification_assignment <=
{classification_assignment
classification_assignment.role ->
classification_role
classification_role.name = 'elbow fitting type classification'}
classification_assignment
classification_assignment.assigned_classification ->
{group =>
elbow_fitting_class}
group
group.name

5.1.9.15 Expander_flange

AIM element: piping_component_definition

Source: 227

Rules: dependent_instantiable_product_context
product_context_discipline_type_constraint

© ISO 2001 – All rights reserved

value_for_application_context

Reference path: piping_component_definition <=
product_definition
{piping_component_definition
classification_item = piping_component_definition
classification_item <-
applied_classification_assignment.items[i]
applied_classification_assignment <=
classification_assignment
classification_assignment.assigned_classification ->
[group =>
flange_fitting_class]
[group
group.name = 'expander flange']}
{product_definition
product_definition.formation ->
product_definition_formation
product_definition_formation.of_product ->
[product
classification_item = product
classification_item <-
applied_classification_assignment.items[i]
applied_classification_assignment <=
classification_assignment
classification_assignment.assigned_classification ->
(group)
(group <-
group_relationship.related_group
group_relationship
group_relationship.relating_group ->
group)
group.name = 'flange']
[product
product.frame_of_reference[i] ->
product_context<=
application_context_element
application_context_element.name = 'plant item']}

5.1.9.16 Family_definition

AIM element: piping_component_class

Source: 227

Reference path: piping_component_class <=
[group]
[characterized_object]

5.1.9.16.1 family_classification_description

AIM element: group_relationship.related_group

© ISO 2001 – All rights reserved

Source: 41

Reference path: piping_component_class <=
group
group_relationship.related_group

5.1.9.17 Ferrule

#1: The attributes are for an individual piping component.

#2: The attributes are for the definition of a family of piping components.

AIM element: #1: (piping_component_definition)
#2: (piping_component_class)

Source: 227

Rules: dependent_instantiable_product_context
product_context_discipline_type_constraint
value_for_application_context

Reference path: #1: (piping_component_definition <=
product_definition
{product_definition
product_definition.formation ->
product_definition_formation
product_definition_formation.of_product ->
[product
classification_item = product
classification_item <-
applied_classification_assignment.items[i]
applied_classification_assignment <=
classification_assignment
classification_assignment.assigned_classification ->
(group)
(group <-
group_relationship.related_group
group_relationship
group_relationship.relating_group ->
group)
group.name = 'ferrule']
[product
product.frame_of_reference[i] ->
product_context<=
application_context_element
application_context_element.name = 'plant item']})
#2: (piping_component_class <=
[characterized_object]
[group])

5.1.9.17.1 end_1_connector

© ISO 2001 – All rights reserved

AIM element: plant_item_connector

Source: 227

Reference path: piping_component_definition <=
product_definition
characterized_product_definition = product_definition
characterized_product_definition
characterized_definition = characterized_product_definition
characterized_definition <-
property_definition.definition
property_definition =>
product_definition_shape <-
shape_aspect.of_shape
{shape_aspect
shape_aspect.description = 'end 1'}
shape_aspect =>
plant_item_connector

5.1.9.17.2 end_2_connector

AIM element: plant_item_connector

Source: 227

Reference path: piping_component_definition <=
product_definition
characterized_product_definition = product_definition
characterized_product_definition
characterized_definition = characterized_product_definition
characterized_definition <-
property_definition.definition
property_definition =>
product_definition_shape <-
shape_aspect.of_shape
{shape_aspect
shape_aspect.description = 'end 2'}
shape_aspect =>
plant_item_connector

5.1.9.17.3 length

#1: The length is for the individual piping component.

#2: The length is for the definition of a family of piping components.

AIM element: [measure_with_unit.value_component]
[measure_with_unit.unit_component]

Source: 41

Rules: subtype_exclusive_characterized_object
subtype_mandatory_shape_representation

© ISO 2001 – All rights reserved

Reference path: #1: (piping_component_definition <=
product_definition
characterized_product_definition = product_definition
characterized_product_definition
characterized_definition = characterized_product_definition
characterized_definition <-
property_definition.definition
property_definition =>
product_definition_shape <-
shape_aspect.of_shape
[shape_aspect <-
shape_aspect_relationship.relating_shape_aspect]
[shape_aspect <-
shape_aspect_relationship.related_shape_aspect]
shape_aspect_relationship =>
dimensional_location
dimensional_characteristic = dimensional_location
dimensional_characteristic <-
dimensional_characteristic_representation.dimension
dimensional_characteristic_representation
dimensional_characteristic_representation.representation ->
shape_dimension_representation <=
shape_representation <=
{representation
representation.name = 'ferrule fitting dimensional shape'}
representation
representation.items[i] ->
{representation_item
representation_item.name = 'length'})
#2: (piping_component_class <=
characterized_object
characterized_definition = characterized_object
characterized_definition <-
property_definition.definition
property_definition
represented_definition = property_definition
represented_definition <-
property_definition_representation.definition
property_definition_representation
property_definition_representation.used_representation ->
{representation
representation.name = 'ferrule fitting class dimensions'}
representation
(representation.items[i] ->
{representation_item
(representation_item.name = 'maximum length')
(representation_item.name = 'minimum length')})
([representation.items[i] ->
{representation_item
representation_item.name = 'maximum length'}]
[representation.items[i] ->
{representation_item
representation_item.name = 'minimum length'}]))
representation_item =>

© ISO 2001 – All rights reserved

measure_representation_item <=
{measure_with_unit =>
length_measure_with_unit}
measure_with_unit
[measure_with_unit.value_component]
[measure_with_unit.unit_component]

5.1.9.18 Fitting

AIM element: (piping_component_definition)
(piping_component_class)

Source: 227

Rules: dependent_instantiable_product_context
product_context_discipline_type_constraint
value_for_application_context

Reference path: (piping_component_definition <=
product_definition
{product_definition
product_definition.formation ->
product_definition_formation
product_definition_formation.of_product ->
[product
classification_item = product
classification_item <-
applied_classification_assignment.items[i]
applied_classification_assignment <=
classification_assignment
classification_assignment.assigned_classification ->
(group)
(group <-
group_relationship.related_group
group_relationship
group_relationship.relating_group ->
group)
group.name = 'fitting']
[product
product.frame_of_reference[i] ->
product_context<=
application_context_element
application_context_element.name = 'plant item']})
(piping_component_class <=
[characterized_object]
[group])
227

5.1.9.19 Flange

#1: The attributes are for the individual piping component.

© ISO 2001 – All rights reserved

#2: The attributes are for the definition of a family of piping components.

AIM element: #1: (piping_component_definition)
#2: (piping_component_class)

Source: 227

Rules: dependent_instantiable_product_context
product_context_discipline_type_constraint
value_for_application_context

Reference path: #1: (piping_component_definition <=
product_definition
{product_definition
product_definition.formation ->
product_definition_formation
product_definition_formation.of_product ->
[product
classification_item = product
classification_item <-
applied_classification_assignment.items[i]
applied_classification_assignment <=
classification_assignment
classification_assignment.assigned_classification ->
(group)
(group <-
group_relationship.related_group
group_relationship
group_relationship.relating_group ->
group)
group.name = 'flange']
[product
product.frame_of_reference[i] ->
product_context<=
application_context_element
application_context_element.name = 'plant item']})
#2: (piping_component_class <=
[characterized_object]
[group])
227

5.1.9.19.1 end_1_connector

AIM element: plant_item_connector

Source: 227

Reference path: piping_component_definition <=
product_definition
characterized_product_definition = product_definition
characterized_product_definition
characterized_definition = characterized_product_definition
characterized_definition <-
property_definition.definition

© ISO 2001 – All rights reserved

property_definition =>
product_definition_shape <-
shape_aspect.of_shape
{shape_aspect
shape_aspect.description = 'end 1'}
shape_aspect =>
plant_item_connector

5.1.9.19.2 end_2_connector

AIM element: plant_item_connector

Source: 227

Reference path: piping_component_definition <=
product_definition
characterized_product_definition = product_definition
characterized_product_definition
characterized_definition = characterized_product_definition
characterized_definition <-
property_definition.definition
property_definition =>
product_definition_shape <-
shape_aspect.of_shape
{shape_aspect
shape_aspect.description = 'end 2'}
shape_aspect =>
plant_item_connector

5.1.9.19.3 hub_through_length

#1: The attributes are for the individual piping component.

#2: The attributes are for the definition of a family of piping components.

AIM element: [measure_with_unit.value_component]
[measure_with_unit.unit_component]

Source: 41

Rules: subtype_exclusive_characterized_object
subtype_mandatory_shape_representation

Reference path: #1: (piping_component_definition <=
product_definition
characterized_product_definition = product_definition
characterized_product_definition
characterized_definition = characterized_product_definition
characterized_definition <-
property_definition.definition
property_definition =>
product_definition_shape <-
shape_aspect.of_shape

© ISO 2001 – All rights reserved

```
[shape_aspect <-
shape_aspect_relationship.relating_shape_aspect]
[shape_aspect <-
shape_aspect_relationship.related_shape_aspect]
shape_aspect_relationship =>
dimensional_location
dimensional_characteristic = dimensional_location
dimensional_characteristic <-
dimensional_characteristic_representation.dimension
dimensional_characteristic_representation
dimensional_characteristic_representation.representation ->
shape_dimension_representation <=
shape_representation <=
{representation
representation.name = 'flange fitting dimensional shape'}
representation
representation.items[i] ->
{representation_item
representation_item.name = 'hub through length'})
#2: (piping_component_class <=
characterized_object
characterized_definition = characterized_object
characterized_definition <-
property_definition.definition
property_definition
represented_definition = property_definition
represented_definition <-
property_definition_representation.definition
property_definition_representation
property_definition_representation.used_representation ->
{representation
representation.name = 'flange fitting class dimensions'}
representation
(representation.items[i] ->
{representation_item
(representation_item.name = 'maximum hub through length')
(representation_item.name = 'minimum hub through length')})
([representation.items[i] ->
{representation_item
representation_item.name = 'maximum hub through length'}]
[representation.items[i] ->
{representation_item
representation_item.name = 'minimum hub through length'}]))
representation_item =>
measure_representation_item <=
{measure_with_unit =>
length_measure_with_unit}
measure_with_unit
[measure_with_unit.value_component]
[measure_with_unit.unit_component]
```

5.1.9.19.4 hub_weld_point_diameter

© ISO 2001 – All rights reserved

#1: The attributes are for the individual piping component.

#2: The attributes are for the definition of a family of piping components.

AIM element: [measure_with_unit.value_component]
[measure_with_unit.unit_component]

Source: 41

Rules: subtype_exclusive_characterized_object
subtype_mandatory_shape_representation

Reference path: #1: (piping_component_definition <=
product_definition
characterized_product_definition = product_definition
characterized_product_definition
characterized_definition = characterized_product_definition
characterized_definition <-
property_definition.definition
property_definition =>
product_definition_shape <-
shape_aspect.of_shape
shape_aspect <-
dimensional_size.applies_to
dimensional_size
dimensional_characteristic = dimensional_size
dimensional_characteristic <-
dimensional_characteristic_representation.dimension
dimensional_characteristic_representation
dimensional_characteristic_representation.representation ->
shape_dimension_representation <=
shape_representation <=
{representation
representation.name = 'flange fitting dimensional shape'}
representation
representation.items[i] ->
{representation_item
representation_item.name = 'hub weld point diameter'})
#2: (piping_component_class <=
characterized_object
characterized_definition = characterized_object
characterized_definition <-
property_definition.definition
property_definition
represented_definition = property_definition
represented_definition <-
property_definition_representation.definition
property_definition_representation
property_definition_representation.used_representation ->
{representation
representation.name = 'flange fitting class dimensions'}
representation
(representation.items[i] ->
{representation_item

© ISO 2001 – All rights reserved

(representation_item.name = 'maximum hub weld point diameter')
(representation_item.name = 'minimum hub weld point diameter')})
([representation.items[i] ->
{representation_item
representation_item.name = 'maximum hub weld point diameter'}]
[representation.items[i] ->
{representation_item
representation_item.name = 'minimum hub weld point diameter'}]))
representation_item =>
measure_representation_item <=
{measure_with_unit =>
length_measure_with_unit}
measure_with_unit
[measure_with_unit.value_component]
[measure_with_unit.unit_component]

5.1.9.19.5 hole_straddle_centreline_orientation

#1: The attributes are for the individual piping component.

#2: The attributes are for the definition of a family of piping components.

AIM element: axis2_placement_3d

Source: 42

Reference path: #1: (piping_component_definition <=
product_definition
characterized_product_definition = product_definition
characterized_product_definition
characterized_definition = characterized_product_definition
characterized_definition <-
property_definition.definition
property_definition =>
product_definition_shape <-
shape_aspect.of_shape
[shape_aspect <-
shape_aspect_relationship.relating_shape_aspect]
[shape_aspect <-
shape_aspect_relationship.related_shape_aspect]
shape_aspect_relationship =>
dimensional_location
dimensional_characteristic = dimensional_location
dimensional_characteristic <-
dimensional_characteristic_representation.dimension
dimensional_characteristic_representation
dimensional_characteristic_representation.representation ->
shape_dimension_representation <=
shape_representation <=)
#2: (piping_component_class <=
characterized_object
characterized_definition = characterized_object
characterized_definition <-
property_definition.definition

© ISO 2001 – All rights reserved

property_definition
represented_definition = property_definition
represented_definition <-
property_definition_representation.definition
property_definition_representation
property_definition_representation.used_representation ->)
representation
representation.name = 'flange fitting dimensional shape'}
representation
representation.items[i] ->
representation_item
representation_item.name = 'hole straddle centreline orientation'}
representation_item =>
geometric_representation_item =>
placement =>
axis2_placement_3d

5.1.9.20 Gasket

#1: The attributes are for the individual piping component.

#2: The attributes are for the definition of a family of piping components.

AIM element: #1: (piping_component_definition)
#2: (piping_component_class)

Source: 227

Rules: dependent_instantiable_product_context
product_context_discipline_type_constraint
value_for_application_context

Reference path: #1: (piping_component_definition <=
product_definition
{product_definition
product_definition.formation ->
product_definition_formation
product_definition_formation.of_product ->
[product
classification_item = product
classification_item <-
applied_classification_assignment.items[i]
applied_classification_assignment <=
classification_assignment
classification_assignment.assigned_classification ->
(group)
(group <-
group_relationship.related_group
group_relationship
group_relationship.relating_group ->
group)
group.name = 'gasket']
[product
product.frame_of_reference[i] ->

© ISO 2001 – All rights reserved

product_context<=
application_context_element
application_context_element.name = 'plant item']})
#2: (piping_component_class <=
[characterized_object]
[group])
227

5.1.9.20.1 compressed_thickness

#1: The attributes are for the individual piping component.

#2: The attributes are for the definition of a family of piping components.

AIM element: [measure_with_unit.value_component]
[measure_with_unit.unit_component]

Source: 41

Rules: subtype_exclusive_characterized_object
subtype_mandatory_shape_representation

Reference path: #1: (piping_component_definition <=
product_definition
characterized_product_definition = product_definition
characterized_product_definition
characterized_definition = characterized_product_definition
characterized_definition <-
property_definition.definition
property_definition =>
product_definition_shape <-
shape_aspect.of_shape
[shape_aspect <-
shape_aspect_relationship.relating_shape_aspect]
[shape_aspect <-
shape_aspect_relationship.related_shape_aspect]
shape_aspect_relationship =>
dimensional_location
dimensional_characteristic = dimensional_location
dimensional_characteristic <-
dimensional_characteristic_representation.dimension
dimensional_characteristic_representation
dimensional_characteristic_representation.representation ->
shape_dimension_representation <=
shape_representation <=
{representation
representation.name = 'gasket fitting dimensional shape'}
representation
representation.items[i] ->
{representation_item
representation_item.name = 'thickness'})
#2: (piping_component_class <=
characterized_object
characterized_definition = characterized_object

© ISO 2001 – All rights reserved

characterized_definition <-
property_definition.definition
property_definition
represented_definition = property_definition
represented_definition <-
property_definition_representation.definition
property_definition_representation
property_definition_representation.used_representation ->
{representation
representation.name = 'gasket fitting class dimensions'}
representation
(representation.items[i] ->
{representation_item
(representation_item.name = 'maximum thickness')
(representation_item.name = 'minimum thickness')})
([representation.items[i] ->
{representation_item
representation_item.name = 'maximum thickness'}]
[representation.items[i] ->
{representation_item
representation_item.name = 'minimum thickness'}]))
representation_item =>
{qualified_representation_item
qualified_representation_item.qualifiers[i] ->
value_qualifier
value_qualifier = type_qualifier
type_qualifier
type_qualifier.name = 'compressed'}
measure_representation_item <=
{measure_with_unit =>
length_measure_with_unit}
measure_with_unit
[measure_with_unit.value_component]
[measure_with_unit.unit_component]

5.1.9.20.2 uncompressed_thickness

#1: The attributes are for the individual piping component.

#2: The attributes are for the definition of a family of piping components.

AIM element: [measure_with_unit.value_component]
[measure_with_unit.unit_component]

Source: 41

Rules: subtype_exclusive_characterized_object
subtype_mandatory_shape_representation

Reference path: #1: (piping_component_definition <=
product_definition
characterized_product_definition = product_definition
characterized_product_definition
characterized_definition = characterized_product_definition

© ISO 2001 – All rights reserved

```
characterized_definition <-
property_definition.definition
property_definition =>
product_definition_shape <-
shape_aspect.of_shape
[shape_aspect <-
shape_aspect_relationship.relating_shape_aspect]
[shape_aspect <-
shape_aspect_relationship.related_shape_aspect]
shape_aspect_relationship =>
dimensional_location
dimensional_characteristic = dimensional_location
dimensional_characteristic <-
dimensional_characteristic_representation.dimension
dimensional_characteristic_representation
dimensional_characteristic_representation.representation ->
shape_dimension_representation <=
shape_representation <=
{representation
representation.name = 'gasket fitting dimensional shape'}
representation
representation.items[i] ->
{representation_item
representation_item.name = 'thickness'})
#2: (piping_component_class <=
characterized_object
characterized_definition = characterized_object
characterized_definition <-
property_definition.definition
property_definition
represented_definition = property_definition
represented_definition <-
property_definition_representation.definition
property_definition_representation
property_definition_representation.used_representation ->
{representation
representation.name = 'gasket fitting class dimensions'}
representation
(representation.items[i] ->
{representation_item
(representation_item.name = 'maximum thickness')
(representation_item.name = 'minimum thickness')})
([representation.items[i] ->
{representation_item
representation_item.name = 'maximum thickness'}]
[representation.items[i] ->
{representation_item
representation_item.name = 'minimum thickness'}]))
representation_item =>
{qualified_representation_item
qualified_representation_item.qualifiers[i] ->
value_qualifier
value_qualifier = type_qualifier
type_qualifier
```


© ISO 2001 – All rights reserved

type_qualifier.name = 'uncompressed'}
measure_representation_item <=
{measure_with_unit =>
length_measure_with_unit}
measure_with_unit
[measure_with_unit.value_component]
[measure_with_unit.unit_component]

5.1.9.21 Gusset

AIM element: reinforcing_component_definition

Source: 227

Rules: dependent_instantiable_product_context
product_context_discipline_type_constraint
value_for_application_context

Reference path: reinforcing_component_definition <=
product_definition
{reinforcing_component_definition
classification_item = reinforcing_component_definition
classification_item <-
applied_classification_assignment.items[i]
applied_classification_assignment <=
classification_assignment
classification_assignment.assigned_classification ->
[group =>
piping_support_fitting_-class]
[group
group.name = 'gusset']}
{product_definition
product_definition.formation ->
product_definition_formation
product_definition_formation.of_product ->
[product
classification_item = product
classification_item <-
applied_classification_assignment.items[i]
applied_classification_assignment <=
classification_assignment
classification_assignment.assigned_classification ->
(group)
(group <-
group_relationship.related_group
group_relationship
group_relationship.relating_group ->
group)
group.name = 'reinforcing component']
[product
product.frame_of_reference[i] ->
product_context <=
application_context_element

© ISO 2001 – All rights reserved

application_context_element.name = 'plant item']})

5.1.9.21.1 height

AIM element: [measure_with_unit.value_component]
[measure_with_unit.unit_component]

Source: 41

Rules: subtype_mandatory_shape_representation

Reference path: reinforcing_component_definition <=
product_definition
characterized_product_definition = product_definition
characterized_product_definition
characterized_definition = characterized_product_definition
characterized_definition <-
property_definition.definition
property_definition =>
product_definition_shape <-
shape_aspect.of_shape
[shape_aspect <-
shape_aspect_relationship.relating_shape_aspect]
[shape_aspect <-
shape_aspect_relationship.related_shape_aspect]
shape_aspect_relationship =>
dimensional_location
dimensional_characteristic = dimensional_location
dimensional_characteristic <-
dimensional_characteristic_representation.dimension
dimensional_characteristic_representation
dimensional_characteristic_representation.representation ->
shape_dimension_representation <=
shape_representation <=
{representation
representation.name = 'gusset dimensional shape'}
representation
representation.items[i] ->
representation_item =>
{representation_item.name = 'height'}
measure_representation_item <=
{measure_with_unit =>
length_measure_with_unit}
measure_with_unit
[measure_with_unit.value_component]
[measure_with_unit.unit_component]

5.1.9.22 Inline_equipment

AIM element: inline_equipment

Source: 227

© ISO 2001 – All rights reserved

Rules: dependent_instantiable_product_context
product_context_discipline_type_constraint
value_for_application_context

Reference path: inline_equipment <=
{piping_component_definition
classification_item = piping_component_definition
classification_item <-
applied_classification_assignment.items[i]
applied_classification_assignment <=
classification_assignment
classification_assignment.assigned_classification ->
group
group.name = 'equipment'}
piping_component_definition <=
product_definition
{product_definition
product_definition.formation ->
product_definition_formation
product_definition_formation.of_product ->
product
product.frame_of_reference[i] ->
product_context<=
application_context_element
application_context_element.name = 'plant item'}

5.1.9.23 Inline_instrument

AIM element: piping_component_definition

Source: 227

Rules: dependent_instantiable_product_context
product_context_discipline_type_constraint
value_for_application_context

Reference path: piping_component_definition <=
product_definition
{[piping_component_definition
classification_item = piping_component_definition
classification_item <-
applied_classification_assignment.items[i]
applied_classification_assignment <=
classification_assignment
classification_assignment.assigned_classification ->
group
group.name = 'instrument']
[piping_component_definition <=
product_definition
product_definition.formation ->
product_definition_formation
product_definition_formation.of_product ->
product
product.frame_of_reference[i] ->

© ISO 2001 – All rights reserved

product_context<=
application_context_element
application_context_element.name = 'plant item']}

5.1.9.24 Insert

#1: The attributes are for the individual piping component.

#2: The attributes are for the definition of a family of piping components.

AIM element: #1: (piping_component_definition)
#2: (piping_component_class)

Source: 227

Rules: dependent_instantiable_product_context
product_context_discipline_type_constraint
value_for_application_context

Reference path: #1: (piping_component_definition <=
product_definition
{product_definition
product_definition.formation ->
product_definition_formation
product_definition_formation.of_product ->
[product
classification_item = product
classification_item <-
applied_classification_assignment.items[i]
applied_classification_assignment <=
classification_assignment
classification_assignment.assigned_classification ->
(group)
(group <-
group_relationship.related_group
group_relationship
group_relationship.relating_group ->
group)
group.name = 'insert']
[product
product.frame_of_reference[i] ->
product_context<=
application_context_element
application_context_element.name = 'plant item']})
#2: (piping_component_class <=
[characterized_object]
[group])
227

5.1.9.24.1 end_1_connector

AIM element: plant_item_connector

© ISO 2001 – All rights reserved

Source: 227

Reference path: piping_component_definition <=
product_definition
characterized_product_definition = product_definition
characterized_product_definition
characterized_definition = characterized_product_definition
characterized_definition <-
property_definition.definition
property_definition =>
product_definition_shape <-
shape_aspect.of_shape
{shape_aspect
shape_aspect.description = 'end 1'}
shape_aspect =>
plant_item_connector

5.1.9.24.2 end_2_connector

AIM element: plant_item_connector

Source: 227

Reference path: piping_component_definition <=
product_definition
characterized_product_definition = product_definition
characterized_product_definition
characterized_definition = characterized_product_definition
characterized_definition <-
property_definition.definition
property_definition =>
product_definition_shape <-
shape_aspect.of_shape
{shape_aspect
shape_aspect.description = 'end 2'}
shape_aspect =>
plant_item_connector

5.1.9.24.3 end_to_end_length

#1: The attributes are for the individual piping component.

#2: The attributes are for the definition of a family of piping components.

AIM element: [measure_with_unit.value_component]
[measure_with_unit.unit_component]

Source: 41

Rules: subtype_exclusive_characterized_object
subtype_mandatory_shape_representation

Reference path: #1: (piping_component_definition <=

© ISO 2001 – All rights reserved

```
product_definition
characterized_product_definition = product_definition
characterized_product_definition
characterized_definition = characterized_product_definition
characterized_definition <-
property_definition.definition
property_definition =>
product_definition_shape <-
shape_aspect.of_shape
[{[shape_aspect =>
plant_item_connector]
[shape_aspect
shape_aspect.description = 'end 1']}
shape_aspect <-
shape_aspect_relationship.relating_shape_aspect]
[{[shape_aspect =>
plant_item_connector]
[shape_aspect
shape_aspect.description = 'end 2']}
shape_aspect <-
shape_aspect_relationship.related_shape_aspect]
shape_aspect_relationship =>
dimensional_location
dimensional_characteristic = dimensional_location
dimensional_characteristic <-
dimensional_characteristic_representation.dimension
dimensional_characteristic_representation
dimensional_characteristic_representation.representation ->
shape_dimension_representation <=
shape_representation <=
{representation
representation.name = 'insert fitting dimensional shape'}
representation
representation.items[i] ->
{representation_item
representation_item.name = 'end to end length'})
#2: (piping_component_class <=
characterized_object
characterized_definition = characterized_object
characterized_definition <-
property_definition.definition
property_definition
represented_definition = property_definition
represented_definition <-
property_definition_representation.definition
property_definition_representation
property_definition_representation.used_representation ->
{representation
representation.name = 'insert fitting class dimensions'}
representation
(representation.items[i] ->
{representation_item
(representation_item.name = 'maximum end to end length')
(representation_item.name = 'minimum end to end length')})
```


© ISO 2001 – All rights reserved

([representation.items[i] ->
{representation_item
representation_item.name = 'maximum end to end length'}]
[representation.items[i] ->
{representation_item
representation_item.name = 'minimum end to end length'}]))
representation_item =>
measure_representation_item <=
{measure_with_unit =>
length_measure_with_unit}
measure_with_unit
[measure_with_unit.value_component]
[measure_with_unit.unit_component]

5.1.9.25 Inside_and_thickness

#1: The attributes are for the individual piping component.

#2: The attributes are for the definition of a family of piping components.

AIM element: #1: (shape_dimension_representation)
#2: (representation)

Source: 43, 47

Reference path: #1: ({shape_dimension_representation <=
shape_representation <=
[representation
representation.name = 'piping component dimensions']
[representation <-
property_definition_representation.used_representation
property_definition_representation
property_definition_representation.definition ->
(represented_definition
represented_definition = property_definition
{property_definition =>
product_definition_shape}
property_definition
property_definition.definition ->
characterized_definition
characterized_definition = characterized_product_definition
characterized_product_definition
characterized_product_definition = product_definition
product_definition =>
piping_component_definition)
(represented_definition
represented_definition = shape_aspect
shape_aspect =>
plant_item_connector)]})#2: ({[representation
representation.name = 'piping component class size']
[representation <-
property_definition_representation.used_representation
property_definition_representation
property_definition_representation.definition ->

© ISO 2001 – All rights reserved

represented_definition
represented_definition = property_definition
property_definition
property_definition.definition ->
characterized_definition
characterized_definition = characterized_object
characterized_object =>
piping_component_class]})

5.1.9.25.1 inside_diameter

#1: The attributes are for the individual piping component.

#2: The attributes are for the definition of a family of piping components.

AIM element: [measure_with_unit.value_component]
[measure_with_unit.unit_component]

Source: 41

Rules: subtype_mandatory_shape_representation

Reference path: #1: (shape_dimension_representation <=
shape_representation <=
representation
representation.items[i] ->
{representation_item
representation_item.name = 'inside diameter'})
#2: (representation
(representation.items[i] ->
{representation_item
(representation_item.name = 'maximum inside diameter')
(representation_item.name = 'minimum inside diameter')})
([representation.items[i] ->
{representation_item
representation_item.name = 'maximum inside diameter'}]
[representation.items[i] ->
{representation_item
representation_item.name = 'minimum inside diameter'}]))
representation_item =>
measure_representation_item <=
{measure_with_unit =>
length_measure_with_unit}
measure_with_unit
[measure_with_unit.value_component]
[measure_with_unit.unit_component]

5.1.9.25.2 thickness

#1: The attributes are for the individual piping component.

#2: The attributes are for the definition of a family of piping components.

© ISO 2001 – All rights reserved

AIM element: [measure_with_unit.value_component]
[measure_with_unit.unit_component]

Source: 41

Rules: subtype_mandatory_shape_representation

Reference path: #1: (shape_dimension_representation <=
shape_representation <=
representation
representation.items[i] ->
{representation_item
representation_item.name = 'thickness'})
#2: (representation
(representation.items[i] ->
{representation_item
(representation_item.name = 'maximum thickness')
(representation_item.name = 'minimum thickness')})
([representation.items[i] ->
{representation_item
representation_item.name = 'maximum thickness'}]
[representation.items[i] ->
{representation_item
representation_item.name = 'minimum thickness'}]))
representation_item =>
measure_representation_item <=
{measure_with_unit =>
length_measure_with_unit}
measure_with_unit
[measure_with_unit.value_component]
[measure_with_unit.unit_component]

5.1.9.26 Lap_joint_flange

AIM element: piping_component_definition

Source: 227

Rules: dependent_instantiable_product_context
product_context_discipline_type_constraint
value_for_application_context

Reference path: piping_component_definition <=
product_definition
{piping_component_definition
classification_item = piping_component_definition
classification_item <-
applied_classification_assignment.items[i]
applied_classification_assignment <=
classification_assignment
classification_assignment.assigned_classification ->
[group =>
flange_fitting_neck_type_class]
[group

© ISO 2001 – All rights reserved

group.name = 'lap joint flange']}
{product_definition
product_definition.formation ->
product_definition_formation
product_definition_formation.of_product ->
[product
classification_item = product
classification_item <-
applied_classification_assignment.items[i]
applied_classification_assignment <=
classification_assignment
classification_assignment.assigned_classification ->
(group)
(group <-
group_relationship.related_group
group_relationship
group_relationship.relating_group ->
group)
group.name = 'flange']
[product
product.frame_of_reference[i] ->
product_context<=
application_context_element
application_context_element.name = 'plant item']}

5.1.9.27 Lap_joint_stub_end

#1: The attributes are for the individual piping component.

#2: The attributes are for the definition of a family of piping components.

AIM element: #1: (piping_component_definition)
#2: (piping_component_class)

Source: 227

Rules: dependent_instantiable_product_context
product_context_discipline_type_constraint
value_for_application_context

Reference path: #1: (piping_component_definition <=
product_definition
{product_definition
product_definition.formation ->
product_definition_formation
product_definition_formation.of_product ->
[product
classification_item = product
classification_item <-
applied_classification_assignment.items[i]
applied_classification_assignment <=
classification_assignment
classification_assignment.assigned_classification ->
(group)

© ISO 2001 – All rights reserved

(group <-
group_relationship.related_group
group_relationship
group_relationship.relating_group ->
group)
group.name = 'lap joint stub end']
[product
product.frame_of_reference[i] ->
product_context<=
application_context_element
application_context_element.name = 'plant item']})
#2: (piping_component_class <=
[characterized_object]
[group])
227

5.1.9.27.1 end_1_connector

AIM element: plant_item_connector

Source: 227

Reference path: piping_component_definition <=
product_definition
characterized_product_definition = product_definition
characterized_product_definition
characterized_definition = characterized_product_definition
characterized_definition <-
property_definition.definition
property_definition =>
product_definition_shape <-
shape_aspect.of_shape
{shape_aspect
shape_aspect.description = 'end 1'}
shape_aspect =>
plant_item_connector

5.1.9.27.2 end_2_connector

AIM element: plant_item_connector

Source: 227

Reference path: piping_component_definition <=
product_definition
characterized_product_definition = product_definition
characterized_product_definition
characterized_definition = characterized_product_definition
characterized_definition <-
property_definition.definition
property_definition =>
product_definition_shape <-
shape_aspect.of_shape

© ISO 2001 – All rights reserved

{shape_aspect
shape_aspect.description = 'end 2'}
shape_aspect =>
plant_item_connector

5.1.9.27.3 length

#1: The attributes are for the individual piping component.

#2: The attributes are for the definition of a family of piping components.

AIM element: [measure_with_unit.value_component]
[measure_with_unit.unit_component]

Source: 41

Rules: subtype_exclusive_characterized_object
subtype_mandatory_shape_representation

Reference path: #1: (piping_component_definition <=
product_definition
characterized_product_definition = product_definition
characterized_product_definition
characterized_definition = characterized_product_definition
characterized_definition <-
property_definition.definition
property_definition =>
product_definition_shape <-
shape_aspect.of_shape
[shape_aspect <-
shape_aspect_relationship.relating_shape_aspect]
[shape_aspect <-
shape_aspect_relationship.related_shape_aspect]
shape_aspect_relationship =>
dimensional_location
dimensional_characteristic = dimensional_location
dimensional_characteristic <-
dimensional_characteristic_representation.dimension
dimensional_characteristic_representation
dimensional_characteristic_representation.representation ->
shape_dimension_representation <=
shape_representation <=
{representation
representation.name = 'lap joint stub end fitting dimensional shape'}
representation
representation.items[i] ->
{representation_item
representation_item.name = 'length'})
#2: (piping_component_class <=
characterized_object
characterized_definition = characterized_object
characterized_definition <-
property_definition.definition
property_definition

© ISO 2001 – All rights reserved

represented_definition = property_definition
represented_definition <-
property_definition_representation.definition
property_definition_representation
property_definition_representation.used_representation ->
{representation
representation.name = 'lap joint stub end fitting class dimensions'}
representation
(representation.items[i] ->
{representation_item
(representation_item.name = 'maximum length')
(representation_item.name = 'minimum length')})
([representation.items[i] ->
{representation_item
representation_item.name = 'maximum length'}]
[representation.items[i] ->
{representation_item
representation_item.name = 'minimum length'}]))
representation_item =>
measure_representation_item <=
{measure_with_unit =>
length_measure_with_unit}
measure_with_unit
[measure_with_unit.value_component]
[measure_with_unit.unit_component]

5.1.9.27.4 stub_diameter

#1: The attributes are for the individual piping component.

#2: The attributes are for the definition of a family of piping components.

AIM element: [measure_with_unit.value_component]
[measure_with_unit.unit_component]

Source: 41

Rules: subtype_exclusive_characterized_object
subtype_mandatory_shape_representation

Reference path: #1: (piping_component_definition <=
product_definition
characterized_product_definition = product_definition
characterized_product_definition
characterized_definition = characterized_product_definition
characterized_definition <-
property_definition.definition
property_definition =>
product_definition_shape <-
shape_aspect.of_shape
shape_aspect <-
dimensional_size.applies_to
dimensional_size
dimensional_characteristic = dimensional_size

© ISO 2001 – All rights reserved

dimensional_characteristic <-
dimensional_characteristic_representation.dimension
dimensional_characteristic_representation
dimensional_characteristic_representation.representation ->
shape_dimension_representation <=
shape_representation <=
{representation
representation.name = 'lap joint stub end fitting dimensional shape'}
representation
representation.items[i] ->
{representation_item
representation_item.name = 'stub diameter'})
#2: (piping_component_class <=
characterized_object
characterized_definition = characterized_object
characterized_definition <-
property_definition.definition
property_definition
represented_definition = property_definition
represented_definition <-
property_definition_representation.definition
property_definition_representation
property_definition_representation.used_representation ->
{representation
representation.name = 'lap joint stub end fitting class dimensions'}
representation
(representation.items[i] ->
{representation_item
(representation_item.name = 'maximum stub diameter')
(representation_item.name = 'minimum stub diameter')})
([representation.items[i] ->
{representation_item
representation_item.name = 'maximum stub diameter'}]
[representation.items[i] ->
{representation_item
representation_item.name = 'minimum stub diameter'}]))
representation_item =>
measure_representation_item <=
{measure_with_unit =>
length_measure_with_unit}
measure_with_unit
[measure_with_unit.value_component]
[measure_with_unit.unit_component]

5.1.9.27.5 stub_thickness

#1: The attributes are for the individual piping component.

#2: The attributes are for the definition of a family of piping components.

AIM element: [measure_with_unit.value_component]
[measure_with_unit.unit_component]

© ISO 2001 – All rights reserved

Source: 41

Rules: subtype_exclusive_characterized_object
subtype_mandatory_shape_representation

Reference path: #1: (piping_component_definition <=
product_definition
characterized_product_definition = product_definition
characterized_product_definition
characterized_definition = characterized_product_definition
characterized_definition <-
property_definition.definition
property_definition =>
product_definition_shape <-
shape_aspect.of_shape
[shape_aspect <-
shape_aspect_relationship.relating_shape_aspect]
[shape_aspect <-
shape_aspect_relationship.related_shape_aspect]
shape_aspect_relationship =>
dimensional_location
dimensional_characteristic = dimensional_location
dimensional_characteristic <-
dimensional_characteristic_representation.dimension
dimensional_characteristic_representation
dimensional_characteristic_representation.representation ->
shape_dimension_representation <=
shape_representation <=
{representation
representation.name = 'lap joint stub end fitting dimensional shape'}
representation
representation.items[i] ->
{representation_item
representation_item.name = 'stub thickness'})
#2: (piping_component_class <=
characterized_object
characterized_definition = characterized_object
characterized_definition <-
property_definition.definition
property_definition
represented_definition = property_definition
represented_definition <-
property_definition_representation.definition
property_definition_representation
property_definition_representation.used_representation ->
{representation
representation.name = 'lap joint stub end fitting class dimensions'}
representation
(representation.items[i] ->
{representation_item
(representation_item.name = 'maximum stub thickness')
(representation_item.name = 'minimum stub thickness')})
([representation.items[i] ->
{representation_item

© ISO 2001 – All rights reserved

representation_item.name = 'maximum stub thickness'}]
[representation.items[i] ->
{representation_item
representation_item.name = 'minimum stub thickness'}]))
representation_item =>
measure_representation_item <=
{measure_with_unit =>
length_measure_with_unit}
measure_with_unit
[measure_with_unit.value_component]
[measure_with_unit.unit_component]

5.1.9.28 Lateral

#1: The attributes are for the individual piping component.

#2: The attributes are for the definition of a family of piping components.

AIM element: #1: (piping_component_definition)
#2: (piping_component_class)

Source: 227

Rules: dependent_instantiable_product_context
product_context_discipline_type_constraint
value_for_application_context

Reference path: #1: (piping_component_definition <=
product_definition
{product_definition
product_definition.formation ->
product_definition_formation
product_definition_formation.of_product ->
[product
classification_item = product
classification_item <-
applied_classification_assignment.items[i]
applied_classification_assignment <=
classification_assignment
classification_assignment.assigned_classification ->
(group)
(group <-
group_relationship.related_group
group_relationship
group_relationship.relating_group ->
group)
group.name = 'lateral']
[product
product.frame_of_reference[i] ->
product_context<=
application_context_element
application_context_element.name = 'plant item']})
#2: (piping_component_class <=
[characterized_object]

© ISO 2001 – All rights reserved

[group])
227

5.1.9.28.1 branch_angle

#1: The attributes are for the individual piping component.

#2: The attributes are for the definition of a family of piping components.

AIM element: [measure_with_unit.value_component]
[measure_with_unit.unit_component]

Source: 41

Rules: subtype_exclusive_characterized_object
subtype_mandatory_shape_representation

Reference path: #1: (piping_component_definition <=
product_definition
characterized_product_definition = product_definition
characterized_product_definition
characterized_definition = characterized_product_definition
characterized_definition <-
property_definition.definition
property_definition =>
product_definition_shape <-
shape_aspect.of_shape
[shape_aspect <-
shape_aspect_relationship.relating_shape_aspect]
[shape_aspect <-
shape_aspect_relationship.related_shape_aspect]
shape_aspect_relationship =>
{dimensional_location =>
angular_location}
dimensional_location
dimensional_characteristic = dimensional_location
dimensional_characteristic <-
dimensional_characteristic_representation.dimension
dimensional_characteristic_representation
dimensional_characteristic_representation.representation ->
shape_dimension_representation <=
shape_representation <=
{representation
representation.name = 'lateral fitting dimensional shape'}
representation
representation.items[i] ->
{representation_item
representation_item.name = 'branch angle'})
#2: (piping_component_class <=
characterized_object
characterized_definition = characterized_object
characterized_definition <-
property_definition.definition
property_definition

© ISO 2001 – All rights reserved

represented_definition = property_definition
represented_definition <-
property_definition_representation.definition
property_definition_representation
property_definition_representation.used_representation ->
{representation
representation.name = 'lateral fitting class dimensions'}
representation
(representation.items[i] ->
{representation_item
(representation_item.name = 'maximum branch angle')
(representation_item.name = 'minimum branch angle')})
([representation.items[i] ->
{representation_item
representation_item.name = 'maximum branch angle'}]
[representation.items[i] ->
{representation_item
representation_item.name = 'minimum branch angle'}]))
representation_item =>
measure_representation_item <=
{measure_with_unit =>
plane_angle_measure_with_unit}
measure_with_unit
[measure_with_unit.value_component]
[measure_with_unit.unit_component]

5.1.9.28.2 centre_to_end_1_length

#1: The attributes are for the individual piping component.

#2: The attributes are for the definition of a family of piping components.

AIM element: [measure_with_unit.value_component]
[measure_with_unit.unit_component]

Source: 41

Rules: subtype_exclusive_characterized_object
subtype_mandatory_shape_representation

Reference path: #1: (piping_component_definition <=
product_definition
characterized_product_definition = product_definition
characterized_product_definition
characterized_definition = characterized_product_definition
characterized_definition <-
property_definition.definition
property_definition =>
product_definition_shape <-
[shape_aspect.of_shape
{[shape_aspect shape_aspect
shape_aspect.description = 'centre'}
shape_aspect <-
shape_aspect_relationship.relating_shape_aspect]

© ISO 2001 – All rights reserved

```
[shape_aspect.of_shape
{[shape_aspect =>
plant_item_connector]
[shape_aspect
shape_aspect.description = 'end 1']}
shape_aspect <-
shape_aspect_relationship.related_shape_aspect]
shape_aspect_relationship =>
dimensional_location
dimensional_characteristic = dimensional_location
dimensional_characteristic <-
dimensional_characteristic_representation.dimension
dimensional_characteristic_representation
dimensional_characteristic_representation.representation ->
shape_dimension_representation <=
shape_representation <=
{representation
representation.name = 'lateral fitting dimensional shape'}
representation
representation
representation.items[i] ->
{representation_item
representation_item.name = 'centre to end 1 length'})
#2: (piping_component_class <=
characterized_object
characterized_definition = characterized_object
characterized_definition <-
property_definition.definition
property_definition
represented_definition = property_definition
represented_definition <-
property_definition_representation.definition
property_definition_representation
property_definition_representation.used_representation ->
{representation
representation.name = 'lateral fitting class dimensions'}
representation
(representation.items[i] ->
{representation_item
(representation_item.name = 'maximum centre to end 1 length')
(representation_item.name = 'minimum centre to end 1 length')})
([representation.items[i] ->
{representation_item
representation_item.name = 'maximum centre to end 1 length'}]
[representation.items[i] ->
{representation_item
representation_item.name = 'minimum centre to end 1 length'}]))
representation_item =>
measure_representation_item <=
{measure_with_unit =>
length_measure_with_unit}
measure_with_unit
[measure_with_unit.value_component]
```


© ISO 2001 – All rights reserved

[measure_with_unit.unit_component]

5.1.9.28.3 centre_to_end_2_length

#1: The attributes are for the individual piping component.

#2: The attributes are for the definition of a family of piping components.

AIM element: [measure_with_unit.value_component]
[measure_with_unit.unit_component]

Source: 41

Rules: subtype_exclusive_characterized_object
subtype_mandatory_shape_representation

Reference path: #1: (piping_component_definition <=
product_definition
characterized_product_definition = product_definition
characterized_product_definition
characterized_definition = characterized_product_definition
characterized_definition <-
property_definition.definition
property_definition =>
product_definition_shape <-
[shape_aspect.of_shape
{shape_aspect
shape_aspect.description = 'centre'}
shape_aspect <-
shape_aspect_relationship.relating_shape_aspect]
[shape_aspect.of_shape
{[shape_aspect =>
plant_item_connector]
[shape_aspect
shape_aspect.description = 'end 2']}
shape_aspect <-
shape_aspect_relationship.related_shape_aspect]
shape_aspect_relationship =>
dimensional_location
dimensional_characteristic = dimensional_location
dimensional_characteristic <-
dimensional_characteristic_representation.dimension
dimensional_characteristic_representation
dimensional_characteristic_representation.representation ->
shape_dimension_representation <=
shape_representation <=
{representation
representation.name = 'lateral fitting dimensional shape'}
representation
representation.items[i] ->
{representation_item
representation_item.name = 'centre to end 2 length'})
#2: (piping_component_class <=
characterized_object

© ISO 2001 – All rights reserved

characterized_definition = characterized_object
characterized_definition <-
property_definition.definition
property_definition
represented_definition = property_definition
represented_definition <-
property_definition_representation.definition
property_definition_representation
property_definition_representation.used_representation ->
{representation
representation.name = 'lateral fitting class dimensions'}
representation
(representation.items[i] ->
{representation_item
(representation_item.name = 'maximum centre to end 2 length')
(representation_item.name = 'minimum centre to end 2 length')})
([representation.items[i] ->
{representation_item
representation_item.name = 'maximum centre to end 2 length'}]
[representation.items[i] ->
{representation_item
representation_item.name = 'minimum centre to end 2 length'}]))
representation_item =>
measure_representation_item <=
{measure_with_unit =>
length_measure_with_unit}
measure_with_unit
[measure_with_unit.value_component]
[measure_with_unit.unit_component]

5.1.9.28.4 centre_to_end_3_length

#1: The attributes are for the individual piping component.

#2: The attributes are for the definition of a family of piping components.

AIM element: [measure_with_unit.value_component]
[measure_with_unit.unit_component]

Source: 41

Rules: subtype_exclusive_characterized_object
subtype_mandatory_shape_representation

Reference path: #1: (piping_component_definition <=
product_definition
characterized_product_definition = product_definition
characterized_product_definition
characterized_definition = characterized_product_definition
characterized_definition <-
property_definition.definition
property_definition =>
product_definition_shape <-
[shape_aspect.of_shape

© ISO 2001 – All rights reserved

```
{shape_aspect
shape_aspect.description = 'centre'}
shape_aspect <-
shape_aspect_relationship.relating_shape_aspect]
[shape_aspect.of_shape
{[shape_aspect =>
plant_item_connector]
[shape_aspect
shape_aspect.description = 'end 3']}
shape_aspect <-
shape_aspect_relationship.related_shape_aspect]
shape_aspect_relationship =>
dimensional_location
dimensional_characteristic = dimensional_location
dimensional_characteristic <-
dimensional_characteristic_representation.dimension
dimensional_characteristic_representation
dimensional_characteristic_representation.representation ->
shape_dimension_representation <=
shape_representation <=
{representation
representation.name = 'lateral fitting dimensional shape'}
representation
representation.items[i] ->
{representation_item
representation_item.name = 'centre to end 3 length'})
#2: (piping_component_class <=
characterized_object
characterized_definition = characterized_object
characterized_definition <-
property_definition.definition
property_definition
represented_definition = property_definition
represented_definition <-
property_definition_representation.definition
property_definition_representation
property_definition_representation.used_representation ->
{representation
representation.name = 'lateral fitting class dimensions'}
representation
(representation.items[i] ->
{representation_item
(representation_item.name = 'maximum centre to end 3 length')
(representation_item.name = 'minimum centre to end 3 length')})
([representation.items[i] ->
{representation_item
representation_item.name = 'maximum centre to end 3 length'}]
[representation.items[i] ->
{representation_item
representation_item.name = 'minimum centre to end 3 length'}]))
representation_item =>
measure_representation_item <=
{measure_with_unit =>
length_measure_with_unit}
```


© ISO 2001 – All rights reserved

measure_with_unit
[measure_with_unit.value_component]
[measure_with_unit.unit_component]

5.1.9.28.5 end_1_connector

AIM element: plant_item_connector

Source: 227

Reference path: piping_component_definition <=
product_definition
characterized_product_definition = product_definition
characterized_product_definition
characterized_definition = characterized_product_definition
characterized_definition <-
property_definition.definition
property_definition =>
product_definition_shape <-
shape_aspect.of_shape
{shape_aspect
shape_aspect.description = 'end 1'}
shape_aspect =>
plant_item_connector

5.1.9.28.6 end_2_connector

AIM element: plant_item_connector

Source: 227

Reference path: piping_component_definition <=
product_definition
characterized_product_definition = product_definition
characterized_product_definition
characterized_definition = characterized_product_definition
characterized_definition <-
property_definition.definition
property_definition =>
product_definition_shape <-
shape_aspect.of_shape
{shape_aspect
shape_aspect.description = 'end 2'}
shape_aspect =>
plant_item_connector

5.1.9.28.7 end_3_connector

AIM element: plant_item_connector

Source: 227

© ISO 2001 – All rights reserved

Reference path: piping_component_definition <=
product_definition
characterized_product_definition = product_definition
characterized_product_definition
characterized_definition = characterized_product_definition
characterized_definition <-
property_definition.definition
property_definition =>
product_definition_shape <-
shape_aspect.of_shape
{shape_aspect
shape_aspect.description = 'end 3'}
shape_aspect =>
plant_item_connector

5.1.9.29 Lined_piping

AIM element: piping_spool_definition

Source: 227

Reference path: piping_spool_definition <=
product_definition
classification_item = product_definition
classification_item <-
applied_classification_assignment.items[i]
applied_classification_assignment <=
{classification_assignment
classification_assignment.role ->
group_role

' group_role.name = 'lining type'}
classification_assignment
classification_assignment.assigned_classification ->
group
group.name
{group.name = 'lined'}

5.1.9.29.1 lining_thickness_inside_pipe

AIM element: [measure_with_unit.value_component]
[measure_with_unit.unit_component]

Source: 41

Reference path: piping_spool_definition <=
product_definition <-
characterized_product_definition = product_definition
characterized_definition = characterized_product_definition
characterized_definition <-
property_definition.definition
property_definition =>
product_definition_shape <-

© ISO 2001 – All rights reserved

shape_aspect.of_shape
{shape_aspect
shape_aspect.name = 'pipe lining'}
shape_aspect
represented_definition = shape_aspect
represented_definition <-
property_definition_representation.definition
{property_definition_representation =>
shape_definition_representation}
property_definition_representation
property_definition_representation.used_representation ->
representation
representation.items [i] ->
{representation_item
representation_item.name = 'thickness'}
representation_item =>
measure_representation_item <=
{measure_with_unit =>
length_measure_with_unit}
measure_with_unit
[measure_with_unit.value_component]
[measure_with_unit.unit_component]

5.1.9.29.2 lining_thickness_at_flange_face

AIM element: [measure_with_unit.value_component]
[measure_with_unit.unit_component]

Source: 41

Reference path: piping_spool_definition <=
product_definition <-
characterized_product_definition = product_definition
characterized_definition = characterized_product_definition
characterized_definition <-
property_definition.definition
property_definition =>
product_definition_shape <-
shape_aspect.of_shape
{shape_aspect
shape_aspect.name = 'flange face lining'}
shape_aspect
represented_definition = shape_aspect
represented_definition <-
property_definition_representation.definition
{property_definition_representation =>
shape_definition_representation}
property_definition_representation
property_definition_representation.used_representation ->
representation
representation.items [i] ->
{representation_item
representation_item.name = 'thickness'}
representation_item =>

© ISO 2001 – All rights reserved

measure_representation_item <=
{measure_with_unit =>
length_measure_with_unit}
measure_with_unit
[measure_with_unit.value_component]
[measure_with_unit.unit_component]

5.1.9.30 Lug

AIM element: piping_support_definition

Source: 227

Rules: dependent_instantiable_product_context
product_context_discipline_type_constraint
value_for_application_context

Reference path: piping_support_definition <=
product_definition
{piping_support_definition
classification_item = piping_support_definition
classification_item <-
applied_classification_assignment.items[i]
applied_classification_assignment <=
classification_assignment
classification_assignment.assigned_classification ->
[group =>
piping_support_fitting_-class]
[group
group.name = 'lug']}
{product_definition
product_definition.formation ->
product_definition_formation
product_definition_formation.of_product ->
[product
classification_item = product
classification_item <-
applied_classification_assignment.items[i]
applied_classification_assignment <=
classification_assignment
classification_assignment.assigned_classification ->
(group)
(group <-
group_relationship.related_group
group_relationship
group_relationship.relating_group ->
group)
group.name = 'piping support']
[product
product.frame_of_reference[i] ->
product_context <=
application_context_element
application_context_element.name = 'plant item']})

© ISO 2001 – All rights reserved

5.1.9.30.1 length

AIM element: [measure_with_unit.value_component]
[measure_with_unit.unit_component]

Source: 41

Rules: subtype_mandatory_shape_representation

Reference path: piping_support_definition <=
product_definition
characterized_product_definition = product_definition
characterized_product_definition
characterized_definition = characterized_product_definition
characterized_definition <-
property_definition.definition
property_definition =>
product_definition_shape <-
shape_aspect.of_shape
[shape_aspect <-
shape_aspect_relationship.relating_shape_aspect]
[shape_aspect <-
shape_aspect_relationship.related_shape_aspect]
shape_aspect_relationship =>
dimensional_location
dimensional_characteristic = dimensional_location
dimensional_characteristic <-
dimensional_characteristic_representation.dimension
dimensional_characteristic_representation
dimensional_characteristic_representation.representation ->
shape_dimension_representation <=
shape_representation <=
{representation
representation.name = 'lug dimensional shape'}
representation
representation.items[i] ->
representation_item =>
{representation_item.name = 'length'}
measure_representation_item <=
{measure_with_unit =>
length_measure_with_unit}
measure_with_unit
[measure_with_unit.value_component]
[measure_with_unit.unit_component]

5.1.9.31 Mitre_bend_pipe

#1: The attributes are for the individual piping component.

#2: The attributes are for the definition of a family of piping components.

AIM element: #1: (piping_component_definition)
#2: (piping_component_class)

© ISO 2001 – All rights reserved

Source: 227

Rules: dependent_instantiable_product_context
product_context_discipline_type_constraint
value_for_application_context

Reference path: #1: (piping_component_definition <=
product_definition
{piping_component_definition
classification_item = piping_component_definition
classification_item <-
applied_classification_assignment.items[i]
applied_classification_assignment <=
classification_assignment
classification_assignment.assigned_classification ->
[group =>
pipe_class]
[group
group.name = 'mitre bend pipe']}
{product_definition
product_definition.formation ->
product_definition_formation
product_definition_formation.of_product ->
[product
classification_item = product
classification_item <-
applied_classification_assignment.items[i]
applied_classification_assignment <=
classification_assignment
classification_assignment.assigned_classification ->
(group)
(group <-
group_relationship.related_group
group_relationship
group_relationship.relating_group ->
group)
group.name = 'pipe']
227
[product
product.frame_of_reference[i] ->
product_context<=
application_context_element
application_context_element.name = 'plant item']})
#2: (piping_component_class <=
[characterized_object]
[group])

5.1.9.31.1 number_of_segments

#1: The attributes are for the individual piping component.

#2: The attributes are for the definition of a family of piping components.

© ISO 2001 – All rights reserved

AIM element: [measure_with_unit.value_component]
[measure_with_unit.unit_component]

Source: 41

Rules: subtype_exclusive_characterized_object

Reference path: #1: (piping_component_definition <=
product_definition
characterized_product_definition = product_definition
characterized_product_definition
characterized_definition = characterized_product_definition
characterized_definition <-
property_definition.definition
property_definition
represented_definition = property_definition
represented_definition <-
property_definition_representation.definition
property_definition_representation
property_definition_representation.used_representation ->
{representation
representation.name = 'pipe characteristics'}
representation
{representation_item
representation_item.name = 'number of segments'})
#2: (piping_component_class <=
characterized_object
characterized_definition = characterized_object
characterized_definition <-
property_definition.definition
property_definition
represented_definition = property_definition
represented_definition <-
property_definition_representation.definition
property_definition_representation
property_definition_representation.used_representation ->
{representation
representation.name = 'pipe class characteristics'}
representation
(representation.items[i] ->
{representation_item
(representation_item.name = 'maximum number of segments')
(representation_item.name = 'minimum number of segments')})
([representation.items[i] ->
{representation_item
representation_item.name = 'maximum number of segments'}]
[representation.items[i] ->
{representation_item
representation_item.name = 'minimum number of segments'}]))
representation_item =>
measure_representation_item <=
measure_with_unit
[measure_with_unit.value_component
{measure_with_unit.value_component ->

© ISO 2001 – All rights reserved

measure_value
measure_value = count_measure}]
[measure_with_unit.unit_component]

5.1.9.31.2 radius

#1: The attributes are for the individual piping component.

#2: The attributes are for the definition of a family of piping components.

AIM element: [measure_with_unit.value_component]
[measure_with_unit.unit_component]

Source: 41

Rules: subtype_exclusive_characterized_object
subtype_mandatory_shape_representation

Reference path: #1: (piping_component_definition <=
product_definition
characterized_product_definition = product_definition
characterized_product_definition
characterized_definition = characterized_product_definition
characterized_definition <-
property_definition.definition
property_definition =>
product_definition_shape <-
shape_aspect.of_shape
shape_aspect <-
dimensional_size.applies_to
dimensional_size
dimensional_characteristic = dimensional_size
dimensional_characteristic <-
dimensional_characteristic_representation.dimension
dimensional_characteristic_representation
dimensional_characteristic_representation.representation ->
shape_dimension_representation <=
shape_representation <=
{representation
representation.name = 'pipe dimensional shape'}
representation
representation.items[i] ->
{representation_item
representation_item.name = 'radius'})
#2: (piping_component_class <=
characterized_object
characterized_definition = characterized_object
characterized_definition <-
property_definition.definition
property_definition
represented_definition = property_definition
represented_definition <-
property_definition_representation.definition
property_definition_representation

© ISO 2001 – All rights reserved

property_definition_representation.used_representation ->
{representation
representation.name = 'pipe class dimensions'}
representation
(representation.items[i] ->
{representation_item
(representation_item.name = 'maximum radius')
(representation_item.name = 'minimum radius')})
([representation.items[i] ->
{representation_item
representation_item.name = 'maximum radius'}]
[representation.items[i] ->
{representation_item
representation_item.name = 'minimum radius'}]))
representation_item =>
measure_representation_item <=
{measure_with_unit =>
length_measure_with_unit}
measure_with_unit
[measure_with_unit.value_component]
[measure_with_unit.unit_component]

5.1.9.31.3 sweep_angle

#1: The attributes are for the individual piping component.

#2: The attributes are for the definition of a family of piping components.

AIM element: [measure_with_unit.value_component]
[measure_with_unit.unit_component]

Source: 41

Rules: subtype_exclusive_characterized_object
subtype_mandatory_shape_representation

Reference path: #1: (piping_component_definition <=
product_definition
characterized_product_definition = product_definition
characterized_product_definition
characterized_definition = characterized_product_definition
characterized_definition <-
property_definition.definition
property_definition =>
product_definition_shape <-
shape_aspect.of_shape
[shape_aspect <-
shape_aspect_relationship.relating_shape_aspect]
[shape_aspect <-
shape_aspect_relationship.related_shape_aspect]
shape_aspect_relationship =>
{dimensional_location =>
angular_location}
dimensional_location

© ISO 2001 – All rights reserved

dimensional_characteristic = dimensional_location
dimensional_characteristic <-
dimensional_characteristic_representation.dimension
dimensional_characteristic_representation
dimensional_characteristic_representation.representation ->
shape_dimension_representation <=
shape_representation <=
{representation
representation.name = 'pipe dimensional shape'}
representation
representation.items[i] ->
{representation_item
representation_item.name = 'sweep angle'})
#2: (piping_component_class <=
characterized_object
characterized_definition = characterized_object
characterized_definition <-
property_definition.definition
property_definition
represented_definition = property_definition
represented_definition <-
property_definition_representation.definition
property_definition_representation
property_definition_representation.used_representation ->
{representation
representation.name = 'pipe class dimensions'}
representation
(representation.items[i] ->
{representation_item
(representation_item.name = 'maximum sweep angle')
(representation_item.name = 'minimum sweep angle')})
([representation.items[i] ->
{representation_item
representation_item.name = 'maximum sweep angle'}]
[representation.items[i] ->
{representation_item
representation_item.name = 'minimum sweep angle'}]))
representation_item =>
measure_representation_item <=
{measure_with_unit =>
plane_angle_measure_with_unit}
measure_with_unit
[measure_with_unit.value_component]
[measure_with_unit.unit_component]

5.1.9.32 Nipple

AIM element: piping_component_definition

Source: 227

Rules: dependent_instantiable_product_context
product_context_discipline_type_constraint
value_for_application_context

© ISO 2001 – All rights reserved

Reference path: piping_component_definition <=
product_definition
{piping_component_definition
classification_item = piping_component_definition
classification_item <-
applied_classification_assignment.items[i]
applied_classification_assignment <=
classification_assignment
classification_assignment.assigned_classification ->
[group =>
pipe_class]
[group
group.name = 'nipple']}
{product_definition
product_definition.formation ->
product_definition_formation
product_definition_formation.of_product ->
[product
classification_item = product
classification_item <-
applied_classification_assignment.items[i]
applied_classification_assignment <=
classification_assignment
classification_assignment.assigned_classification ->
(group)
(group <-
group_relationship.related_group
group_relationship
group_relationship.relating_group ->
group)
group.name = 'pipe']
[product
product.frame_of_reference[i] ->
product_context<=
application_context_element
application_context_element.name = 'plant item']}

5.1.9.32.1 end_to_end_length

AIM element: [measure_with_unit.value_component]
[measure_with_unit.unit_component]

Source: 41

Reference path: piping_component_definition <=
product_definition
characterized_product_definition = product_definition
characterized_product_definition
characterized_definition = characterized_product_definition
characterized_definition <-
property_definition.definition
property_definition =>
product_definition_shape <-

© ISO 2001 – All rights reserved

shape_aspect.of_shape
[{[shape_aspect =>
plant_item_connector]
[shape_aspect
shape_aspect.description = 'end 1']}
shape_aspect <-
shape_aspect_relationship.relating_shape_aspect]
[{[shape_aspect =>
plant_item_connector]
[shape_aspect
shape_aspect.description = 'end 2']}
shape_aspect <-
shape_aspect_relationship.related_shape_aspect]
shape_aspect_relationship =>
dimensional_location
dimensional_characteristic = dimensional_location
dimensional_characteristic <-
dimensional_characteristic_representation.dimension
dimensional_characteristic_representation
dimensional_characteristic_representation.representation ->
shape_dimension_representation <=
shape_representation <=
{representation
representation.name = 'nipple dimensional shape'}
representation
representation.items[i] ->
{representation_item
representation_item.name = 'end to end length'}
representation_item =>
measure_representation_item <=
{measure_with_unit =>
length_measure_with_unit}
measure_with_unit
[measure_with_unit.value_component]
[measure_with_unit.unit_component]

5.1.9.33 Olet

#1: The attributes are for the individual piping component.

#2: The attributes are for the definition of a family of piping components.

AIM element: #1: (piping_component_definition)
#2: (piping_component_class)

Source: 227

Rules: dependent_instantiable_product_context
product_context_discipline_type_constraint
value_for_application_context

Reference path: #1: (piping_component_definition <=
product_definition
{product_definition

© ISO 2001 – All rights reserved

product_definition.formation ->
product_definition_formation
product_definition_formation.of_product ->
[product
classification_item = product
classification_item <-
applied_classification_assignment.items[i]
applied_classification_assignment <=
classification_assignment
classification_assignment.assigned_classification ->
(group)
(group <-
group_relationship.related_group
group_relationship
group_relationship.relating_group ->
group)
group.name = 'olet']
[product
product.frame_of_reference[i] ->
product_context<=
application_context_element
application_context_element.name = 'plant item']})
#2: (piping_component_class <=
[characterized_object]
[group])

5.1.9.33.1 base_outside_diameter

#1: The attributes are for the individual piping component.

#2: The attributes are for the definition of a family of piping components.

AIM element: [measure_with_unit.value_component]
[measure_with_unit.unit_component]

Source: 41

Rules: subtype_exclusive_characterized_object
subtype_mandatory_shape_representation

Reference path: #1: (piping_component_definition <=
product_definition
characterized_product_definition = product_definition
characterized_product_definition
characterized_definition = characterized_product_definition
characterized_definition <-
property_definition.definition
property_definition =>
product_definition_shape <-
shape_aspect.of_shape
shape_aspect <-
dimensional_size.applies_to
dimensional_size
dimensional_characteristic = dimensional_size

© ISO 2001 – All rights reserved

dimensional_characteristic <-
dimensional_characteristic_representation.dimension
dimensional_characteristic_representation
dimensional_characteristic_representation.representation ->
shape_dimension_representation <=
shape_representation <=
{representation
representation.name = 'olet fitting dimensional shape'}
representation
representation.items[i] ->
{representation_item
representation_item.name = 'base outside diameter'})
#2: (piping_component_class <=
characterized_object
characterized_definition = characterized_object
characterized_definition <-
property_definition.definition
property_definition
represented_definition = property_definition
represented_definition <-
property_definition_representation.definition
property_definition_representation
property_definition_representation.used_representation ->
{representation
representation.name = 'olet fitting class dimensions'}
representation
(representation.items[i] ->
{representation_item
(representation_item.name = 'maximum base outside diameter')
(representation_item.name = 'minimum base outside diameter')})
([representation.items[i] ->
{representation_item
representation_item.name = 'maximum base outside diameter'}]
[representation.items[i] ->
{representation_item
representation_item.name = 'minimum base outside diameter'}]))
representation_item =>
measure_representation_item <=
{measure_with_unit =>
length_measure_with_unit}
measure_with_unit
[measure_with_unit.value_component]
[measure_with_unit.unit_component]

5.1.9.33.2 branch_angle

#1: The attributes are for the individual piping component.

#2: The attributes are for the definition of a family of piping components.

AIM element: [measure_with_unit.value_component]
[measure_with_unit.unit_component]

© ISO 2001 – All rights reserved

Source: 41

Rules: subtype_exclusive_characterized_object
subtype_mandatory_shape_representation

Reference path: #1: (piping_component_definition <=
product_definition
characterized_product_definition = product_definition
characterized_product_definition
characterized_definition = characterized_product_definition
characterized_definition <-
property_definition.definition
property_definition =>
product_definition_shape <-
shape_aspect.of_shape
[shape_aspect <-
shape_aspect_relationship.relating_shape_aspect]
[shape_aspect <-
shape_aspect_relationship.related_shape_aspect]
shape_aspect_relationship =>
{dimensional_location =>
angular_location}
dimensional_location
dimensional_characteristic = dimensional_location
dimensional_characteristic <-
dimensional_characteristic_representation.dimension
dimensional_characteristic_representation
dimensional_characteristic_representation.representation ->
shape_dimension_representation <=
shape_representation <=
{representation
representation.name = 'olet fitting dimensional shape'}
representation
representation.items[i] ->
{representation_item
representation_item.name = 'branch angle'})
#2: (piping_component_class <=
characterized_object
characterized_definition = characterized_object
characterized_definition <-
property_definition.definition
property_definition
represented_definition = property_definition
represented_definition <-
property_definition_representation.definition
property_definition_representation
property_definition_representation.used_representation ->
{representation
representation.name = 'lateral fitting class dimensions'}
representation
(representation.items[i] ->
{representation_item
(representation_item.name = 'maximum branch angle')
(representation_item.name = 'minimum branch angle')})

© ISO 2001 – All rights reserved

([representation.items[i] ->
{representation_item
representation_item.name = 'maximum branch angle'}]
[representation.items[i] ->
{representation_item
representation_item.name = 'minimum branch angle'}]))
representation_item =>
measure_representation_item <=
{measure_with_unit =>
plane_angle_measure_with_unit}
measure_with_unit
[measure_with_unit.value_component]
[measure_with_unit.unit_component]

5.1.9.33.3 end_1_connector

AIM element: plant_item_connector

Source: 227

Reference path: piping_component_definition <=
product_definition
characterized_product_definition = product_definition
characterized_product_definition
characterized_definition = characterized_product_definition
characterized_definition <-
property_definition.definition
property_definition =>
product_definition_shape <-
shape_aspect.of_shape
{shape_aspect
shape_aspect.description = 'end 1'}
shape_aspect =>
plant_item_connector

5.1.9.33.4 end_2_connector

AIM element: plant_item_connector

Source: 227

Reference path: piping_component_definition <=
product_definition
characterized_product_definition = product_definition
characterized_product_definition
characterized_definition = characterized_product_definition
characterized_definition <-
property_definition.definition
property_definition =>
product_definition_shape <-
shape_aspect.of_shape
{shape_aspect
shape_aspect.description = 'end 2'}

© ISO 2001 – All rights reserved

shape_aspect =>
plant_item_connector

5.1.9.33.5 length

#1: The attributes are for the individual piping component.

#2: The attributes are for the definition of a family of piping components.

AIM element: [measure_with_unit.value_component]
[measure_with_unit.unit_component]

Source: 41

Rules: subtype_exclusive_characterized_object
subtype_mandatory_shape_representation

Reference path: #1: (piping_component_definition <=
product_definition
characterized_product_definition = product_definition
characterized_product_definition
characterized_definition = characterized_product_definition
characterized_definition <-
property_definition.definition
property_definition =>
product_definition_shape <-
shape_aspect.of_shape
[shape_aspect <-
shape_aspect_relationship.relating_shape_aspect]
[shape_aspect <-
shape_aspect_relationship.related_shape_aspect]
shape_aspect_relationship =>
dimensional_location
dimensional_characteristic = dimensional_location
dimensional_characteristic <-
dimensional_characteristic_representation.dimension
dimensional_characteristic_representation
dimensional_characteristic_representation.representation ->
shape_dimension_representation <=
shape_representation <=
{representation
representation.name = 'olet fitting dimensional shape'}
representation
representation.items[i] ->
{representation_item
representation_item.name = 'length'})
#2: (piping_component_class <=
characterized_object
characterized_definition = characterized_object
characterized_definition <-
property_definition.definition
property_definition
represented_definition = property_definition
represented_definition <-

© ISO 2001 – All rights reserved

property_definition_representation.definition
property_definition_representation
property_definition_representation.used_representation ->
{representation
representation.name = 'olet fitting class dimensions'}
representation
(representation.items[i] ->
{representation_item
(representation_item.name = 'maximum length')
(representation_item.name = 'minimum length')})
([representation.items[i] ->
{representation_item
representation_item.name = 'maximum length'}]
[representation.items[i] ->
{representation_item
representation_item.name = 'minimum length'}]))
representation_item =>
measure_representation_item <=
{measure_with_unit =>
length_measure_with_unit}
measure_with_unit
[measure_with_unit.value_component]
[measure_with_unit.unit_component]

5.1.9.33.6 skirt_outside_diameter

#1: The attributes are for the individual piping component.

#2: The attributes are for the definition of a family of piping components.

AIM element: [measure_with_unit.value_component]
[measure_with_unit.unit_component]

Source: 41

Rules: subtype_exclusive_characterized_object
subtype_mandatory_shape_representation

Reference path: #1: (piping_component_definition <=
product_definition
characterized_product_definition = product_definition
characterized_product_definition
characterized_definition = characterized_product_definition
characterized_definition <-
property_definition.definition
property_definition =>
product_definition_shape <-
shape_aspect.of_shape
shape_aspect <-
dimensional_size.applies_to
dimensional_size
dimensional_characteristic = dimensional_size
dimensional_characteristic <-
dimensional_characteristic_representation.dimension

© ISO 2001 – All rights reserved

dimensional_characteristic_representation
dimensional_characteristic_representation.representation ->
shape_dimension_representation <=
shape_representation <=
{representation
representation.name = 'olet fitting dimensional shape'}
representation
representation.items[i] ->
{representation_item
representation_item.name = 'skirt outside diameter'})
#2: (piping_component_class <=
characterized_object
characterized_definition = characterized_object
characterized_definition <-
property_definition.definition
property_definition
represented_definition = property_definition
represented_definition <-
property_definition_representation.definition
property_definition_representation
property_definition_representation.used_representation ->
{representation
representation.name = 'olet fitting class dimensions'}
representation
(representation.items[i] ->
{representation_item
(representation_item.name = 'maximum skirt outside diameter')
(representation_item.name = 'minimum skirt outside diameter')})
([representation.items[i] ->
{representation_item
representation_item.name = 'maximum skirt outside diameter'}]
[representation.items[i] ->
{representation_item
representation_item.name = 'minimum skirt outside diameter'}]))
representation_item =>
measure_representation_item <=
{measure_with_unit =>
length_measure_with_unit}
measure_with_unit
[measure_with_unit.value_component]
[measure_with_unit.unit_component]

5.1.9.34 Orifice_flange

AIM element: piping_component_definition

Source: 227

Rules: dependent_instantiable_product_context
product_context_discipline_type_constraint
value_for_application_context

Reference path: piping_component_definition <=
product_definition

© ISO 2001 – All rights reserved

{piping_component_definition
classification_item = piping_component_definition
classification_item <-
applied_classification_assignment.items[i]
applied_classification_assignment <=
classification_assignment
classification_assignment.assigned_classification ->
[group =>
flange_fitting_class]
[group
group.name = 'orifice flange']}
{product_definition
product_definition.formation ->
product_definition_formation
product_definition_formation.of_product ->
[product
classification_item = product
classification_item <-
applied_classification_assignment.items[i]
applied_classification_assignment <=
classification_assignment
classification_assignment.assigned_classification ->
(group)
(group <-
group_relationship.related_group
group_relationship
group_relationship.relating_group ->
group)
group.name = 'flange']
[product
product.frame_of_reference[i] ->
product_context<=
application_context_element
application_context_element.name = 'plant item']}

5.1.9.34.1 jacking_screw_orientation

AIM element: shape_aspect.description

Source: 41

Reference path: piping_component_definition <=
product_definition
characterized_product_definition = product_definition
characterized_product_definition
characterized_definition = characterized_product_definition
characterized_definition <-
property_definition.definition
property_definition =>
product_definition_shape <-
shape_aspect.of_shape
{shape_aspect
shape_aspect.name = 'jacking screw'}

© ISO 2001 – All rights reserved

shape_aspect
shape_aspect.description

5.1.9.34.2 tap

AIM element: plant_item_connector

Source: 227

Reference path: piping_component_definition <=
product_definition
characterized_product_definition = product_definition
characterized_product_definition
characterized_definition = characterized_product_definition
characterized_definition <-
property_definition.definition
property_definition =>
product_definition_shape <-
shape_aspect.of_shape
{shape_aspect
shape_aspect.description = 'tap'}
shape_aspect =>
plant_item_connector

5.1.9.34.3 tap_centreline_orientation

AIM element: axis2_placement_3d

Source: 42

Reference path: piping_component_definition <=
product_definition
characterized_product_definition = product_definition
characterized_product_definition
characterized_definition = characterized_product_definition
characterized_definition <-
property_definition.definition
property_definition =>
product_definition_shape <-
shape_aspect.of_shape
{[shape_aspect
shape_aspect.description = 'tap']
[shape_aspect =>
plant_item_connector]
shape_aspect
represented_definition = shape_aspect
represented_definition <-
property_definition_representation.definition
{property_definition_representation =>
shape_definition_representation}
property_definition_representation
property_definition_representation.used_representation ->
{representation =>

© ISO 2001 – All rights reserved

shape_representation}
representation
representation.items [i] ->
{representation_item
representation_item.name = 'centreline orientation'}
representation_item =>
geometric_representation_item
placement =>
axis2_placement_3d

5.1.9.35 Perforated_cap

#1: The attributes are for the individual piping component.
#2: The attributes are for the definition of a family of piping components.

AIM element: #1: (piping_component_definition)
#2: (piping_component_class)

Source: 227

Rules: dependent_instantiable_product_context
product_context_discipline_type_constraint
value_for_application_context

Reference path: #1: (piping_component_definition <=
product_definition
{piping_component_definition
classification_item = piping_component_definition
classification_item <-
applied_classification_assignment.items[i]
applied_classification_assignment <=
classification_assignment
classification_assignment.assigned_classification ->
[group =>
pipe_closure_fitting_class]
[group
group.name = 'perforated cap']
[group <-
group_relationship.related_group
{group_relationship
group_relationship.name = 'class hierarchy'}
group_relationship
group_relationship.relating_group ->
group
group.name = 'cap']}}
{product_definition
product_definition.formation ->
product_definition_formation
product_definition_formation.of_product ->
[product
classification_item = product
classification_item <-
applied_classification_assignment.items[i]
applied_classification_assignment <=

© ISO 2001 – All rights reserved

{classification_assignment
classification_assignment.role ->
group_role
group_role.name = 'plant item type'}
classification_assignment
classification_assignment.assigned_classification ->
(group)
(group <-
group_relationship.related_group
group_relationship
group_relationship.relating_group ->
group)
group.name = 'perforated cap']
[product
product.frame_of_reference[i] ->
product_context<=
application_context_element
application_context_element.name = 'plant item']})
#2: (piping_component_class <=
[characterized_object]
[group])
{[group =>
pipe_closure_fitting_class]
[(group)
(group <-
group_relationship.related_group
group_relationship
group_relationship.relating_group ->
group)
group.name = 'perforated cap']
[group <-
group_relationship.related_group
{group_relationship
group_relationship.name = 'class hierarchy'}
group_relationship
group_relationship.relating_group ->
group
group.name = 'cap']}

5.1.9.35.1 end_2_connector

AIM element: plant_item_connector

Source: 227

Reference path: piping_component_definition <=
product_definition
characterized_product_definition = product_definition
characterized_product_definition
characterized_definition = characterized_product_definition
characterized_definition <-
property_definition.definition
property_definition =>
product_definition_shape <-

© ISO 2001 – All rights reserved

shape_aspect.of_shape
{shape_aspect
shape_aspect.description = 'end 2'}
shape_aspect =>
plant_item_connector

5.1.9.35.2 hole_diameter

#1: The attributes are for the individual piping component.
#2: The attributes are for the definition of a family of piping components.

AIM element: [measure_with_unit.value_component]
[measure_with_unit.unit_component]

Source: 41

Rules: subtype_exclusive_characterized_object
subtype_mandatory_shape_representation

Reference path: #1: (piping_component_definition <=
product_definition
characterized_product_definition = product_definition
characterized_product_definition
characterized_definition = characterized_product_definition
characterized_definition <-
property_definition.definition
property_definition =>
product_definition_shape <-
shape_aspect.of_shape
[shape_aspect <-
dimensional_size.applies_to
dimensional_size
dimensional_characteristic = dimensional_size
dimensional_characteristic <-
dimensional_characteristic_representation.dimension
dimensional_characteristic_representation
dimensional_characteristic_representation.representation ->
shape_dimension_representation <=
shape_representation <=
{representation
representation.name = 'pipe closure fitting dimensional shape'}
representation
representation.items[i] ->
{representation_item
representation_item.name = 'hole diameter'})
#2: (piping_component_class <=
characterized_object
characterized_definition = characterized_object
characterized_definition <-
property_definition.definition
property_definition
represented_definition = property_definition

© ISO 2001 – All rights reserved

represented_definition <-
property_definition_representation.definition
property_definition_representation
property_definition_representation.used_representation ->
{representation
representation.name = 'pipe closure fitting class dimensions'}
representation
(representation.items[i] ->
{representation_item
(representation_item.name = 'maximum hole diameter')
(representation_item.name = 'minimum hole diameter')})
([representation.items[i] ->
{representation_item
representation_item.name = 'maximum hole diameter'}]
[representation.items[i] ->
{representation_item
representation_item.name = 'minimum hole diameter'}]))
representation_item =>
measure_representation_item <=
{measure_with_unit =>
length_measure_with_unit}
measure_with_unit
[measure_with_unit.value_component]
[measure_with_unit.unit_component]

5.1.9.36 Orifice_plate

#1: The attributes are for the individual piping component.

#2: The attributes are for the definition of a family of piping components.

AIM element: #1: (piping_component_definition)
#2: (piping_component_class)

Source: 227

Rules: dependent_instantiable_product_context
product_context_discipline_type_constraint
value_for_application_context

Reference path: #1: (piping_component_definition <=
product_definition
{product_definition
product_definition.formation ->
product_definition_formation
product_definition_formation.of_product ->
[product
classification_item = product
classification_item <-
applied_classification_assignment.items[i]
applied_classification_assignment <=
classification_assignment
classification_assignment.assigned_classification ->
(group)

© ISO 2001 – All rights reserved

(group <-
group_relationship.related_group
group_relationship
group_relationship.relating_group ->
group)
group.name = 'orifice plate']
[product
product.frame_of_reference[i] ->
product_context<=
application_context_element
application_context_element.name = 'plant item']})
#2: (piping_component_class <=
[characterized_object]
[group])
227

5.1.9.36.1 beta_ratio

AIM element: [measure_with_unit.value_component]
[measure_with_unit.unit_component]

Source: 41

Reference path: piping_component_definition <=
product_definition
characterized_product_definition = product_definition
characterized_product_definition
characterized_definition = characterized_product_definition
characterized_definition <-
property_definition.definition
property_definition
represented_definition = property_definition
represented_definition <-
property_definition_representation.definition
property_definition_representation
property_definition_representation.used_representation ->
representation
representation.items[i] ->
{representation_item
representation_item.name = 'beta ratio'}
representation_item =>
measure_representation_item <=
{measure_with_unit =>
ratio_measure_with_unit}
measure_with_unit
[measure_with_unit.value_component]
[measure_with_unit.unit_component]

5.1.9.36.2 bore_diameter

#1: The attributes are for the individual piping component.

© ISO 2001 – All rights reserved

#2: The attributes are for the definition of a family of piping components.

AIM element: [measure_with_unit.value_component]
[measure_with_unit.unit_component]

Source: 41

Rules: subtype_exclusive_characterized_object
subtype_mandatory_shape_representation

Reference path: #1: (piping_component_definition <=
product_definition
characterized_product_definition = product_definition
characterized_product_definition
characterized_definition = characterized_product_definition
characterized_definition <-
property_definition.definition
property_definition =>
product_definition_shape <-
shape_aspect.of_shape
shape_aspect <-
dimensional_size.applies_to
dimensional_size
dimensional_characteristic = dimensional_size
dimensional_characteristic <-
dimensional_characteristic_representation.dimension
dimensional_characteristic_representation
dimensional_characteristic_representation.representation ->
shape_dimension_representation <=
shape_representation <=
{representation
representation.name = 'orifice plate fitting dimensional shape'}
representation
representation.items[i] ->
{representation_item
representation_item.name = 'bore diameter'})
#2: (piping_component_class <=
characterized_object
characterized_definition = characterized_object
characterized_definition <-
property_definition.definition
property_definition
represented_definition = property_definition
represented_definition <-
property_definition_representation.definition
property_definition_representation
property_definition_representation.used_representation ->
{representation
representation.name = 'orifice plate fitting class dimensions'}
representation
(representation.items[i] ->
{representation_item
(representation_item.name = 'maximum bore diameter')
(representation_item.name = 'minimum bore diameter')})

© ISO 2001 – All rights reserved

([representation.items[i] ->
{representation_item
representation_item.name = 'maximum bore diameter'}]
[representation.items[i] ->
{representation_item
representation_item.name = 'minimum bore diameter'}]))
representation_item =>
measure_representation_item <=
{measure_with_unit =>
length_measure_with_unit}
measure_with_unit
[measure_with_unit.value_component]
[measure_with_unit.unit_component]

5.1.9.36.3 outside_diameter

#1: The attributes are for the individual piping component.

#2: The attributes are for the definition of a family of piping components.

AIM element: [measure_with_unit.value_component]
[measure_with_unit.unit_component]

Source: 41

Rules: subtype_exclusive_characterized_object
subtype_mandatory_shape_representation

Reference path: #1: (piping_component_definition <=
product_definition
characterized_product_definition = product_definition
characterized_product_definition
characterized_definition = characterized_product_definition
characterized_definition <-
property_definition.definition
property_definition =>
product_definition_shape <-
shape_aspect.of_shape
shape_aspect <-
dimensional_size.applies_to
dimensional_size
dimensional_characteristic = dimensional_size
dimensional_characteristic <-
dimensional_characteristic_representation.dimension
dimensional_characteristic_representation
dimensional_characteristic_representation.representation ->
shape_dimension_representation <=
shape_representation <=
{representation
representation.name = 'orifice plate fitting dimensional shape'}
representation
representation.items[i] ->
{representation_item
representation_item.name = 'outside diameter'})

© ISO 2001 – All rights reserved

#2: (piping_component_class <=
characterized_object
characterized_definition = characterized_object
characterized_definition <-
property_definition.definition
property_definition
represented_definition = property_definition
represented_definition <-
property_definition_representation.definition
property_definition_representation
property_definition_representation.used_representation ->
{representation
representation.name = 'orifice plate fitting class dimensions'}
representation
(representation.items[i] ->
{representation_item
(representation_item.name = 'maximum outside diameter')
(representation_item.name = 'minimum outside diameter')})
([representation.items[i] ->
{representation_item
representation_item.name = 'maximum outside diameter'}]
[representation.items[i] ->
{representation_item
representation_item.name = 'minimum outside diameter'}]))
representation_item =>
measure_representation_item <=
{measure_with_unit =>
length_measure_with_unit}
measure_with_unit
[measure_with_unit.value_component]
[measure_with_unit.unit_component]

5.1.9.36.4 thickness

#1: The attributes are for the individual piping component.

#2: The attributes are for the definition of a family of piping components.

AIM element: [measure_with_unit.value_component]
[measure_with_unit.unit_component]

Source: 41

Rules: subtype_exclusive_characterized_object
subtype_mandatory_shape_representation

Reference path: #1: (piping_component_definition <=
product_definition
characterized_product_definition = product_definition
characterized_product_definition
characterized_definition = characterized_product_definition
characterized_definition <-
property_definition.definition
property_definition =>

© ISO 2001 – All rights reserved

```
product_definition_shape <-
shape_aspect.of_shape
[shape_aspect <-
shape_aspect_relationship.relating_shape_aspect]
[shape_aspect <-
shape_aspect_relationship.related_shape_aspect]
shape_aspect_relationship =>
dimensional_location
dimensional_characteristic = dimensional_location
dimensional_characteristic <-
dimensional_characteristic_representation.dimension
dimensional_characteristic_representation
dimensional_characteristic_representation.representation ->
shape_dimension_representation <=
shape_representation <=
{representation
representation.name = 'orifice plate fitting dimensional shape'}
representation
representation.items[i] ->
{representation_item
representation_item.name = 'thickness'})
#2: (piping_component_class <=
characterized_object
characterized_definition = characterized_object
characterized_definition <-
property_definition.definition
property_definition
represented_definition = property_definition
represented_definition <-
property_definition_representation.definition
property_definition_representation
property_definition_representation.used_representation ->
{representation
representation.name = 'orifice plate fitting class dimensions'}
representation
(representation.items[i] ->
{representation_item
(representation_item.name = 'maximum thickness')
(representation_item.name = 'minimum thickness')})
([representation.items[i] ->
{representation_item
representation_item.name = 'maximum thickness'}]
[representation.items[i] ->
{representation_item
representation_item.name = 'minimum thickness'}]))
representation_item =>
measure_representation_item <=
{measure_with_unit =>
length_measure_with_unit}
measure_with_unit
[measure_with_unit.value_component]
[measure_with_unit.unit_component]
```


© ISO 2001 – All rights reserved

5.1.9.37 Outside_and_thickness

#1: The attributes are for the individual piping component.

#2: The attributes are for the definition of a family of piping components.

AIM element: #1: (shape_dimension_representation)
#2: (representation)

Source: 43, 47

Reference path: #1: ({shape_dimension_representation <=
shape_representation <=
[representation
representation.name = 'piping component dimensions']
[representation <-
property_definition_representation.used_representation
property_definition_representation
property_definition_representation.definition ->
(represented_definition
represented_definition = property_definition
{property_definition =>
product_definition_shape}
property_definition
property_definition.definition ->
characterized_definition
characterized_definition = characterized_product_definition
characterized_product_definition
characterized_product_definition = product_definition
product_definition =>
piping_component_definition)
(represented_definition
represented_definition = shape_aspect
shape_aspect =>
plant_item_connector)]})
#2: ({[representation
representation.name = 'piping component class size']
[representation <-
property_definition_representation.used_representation
property_definition_representation
property_definition_representation.definition ->
represented_definition
represented_definition = property_definition
property_definition
property_definition.definition ->
characterized_definition
characterized_definition = characterized_object
characterized_object =>
piping_component_class]})

5.1.9.37.1 outside_diameter

#1: The attributes are for the individual piping component.

© ISO 2001 – All rights reserved

#2: The attributes are for the definition of a family of piping components.

AIM element: [measure_with_unit.value_component]
[measure_with_unit.unit_component]

Source: 41

Rules: subtype_mandatory_shape_representation

Reference path: #1: (shape_dimension_representation <=
shape_representation <=
representation
representation.items[i] ->
{representation_item
representation_item.name = 'outside diameter'})
#2: (representation
(representation.items[i] ->
{representation_item
(representation_item.name = 'maximum outside diameter')
(representation_item.name = 'minimum outside diameter')})
([representation.items[i] ->
{representation_item
representation_item.name = 'maximum outside diameter'}]
[representation.items[i] ->
{representation_item
representation_item.name = 'minimum outside diameter'}]))
representation_item =>
measure_representation_item <=
{measure_with_unit =>
length_measure_with_unit}
measure_with_unit
[measure_with_unit.value_component]
[measure_with_unit.unit_component]

5.1.9.37.2 thickness

#1: The attributes are for the individual piping component.

#2: The attributes are for the definition of a family of piping components.

AIM element: [measure_with_unit.value_component]
[measure_with_unit.unit_component]

Source: 41

Rules: subtype_mandatory_shape_representation

Reference path: #1: (shape_dimension_representation <=
shape_representation <=
representation
representation.items[i] ->
{representation_item
representation_item.name = 'thickness'})
#2: (representation

© ISO 2001 – All rights reserved

(representation.items[i] ->
{representation_item
(representation_item.name = 'maximum thickness')
(representation_item.name = 'minimum thickness')})
([representation.items[i] ->
{representation_item
representation_item.name = 'maximum thickness'}]
[representation.items[i] ->
{representation_item
representation_item.name = 'minimum thickness'}]))
representation_item =>
measure_representation_item <=
{measure_with_unit =>
length_measure_with_unit}
measure_with_unit
[measure_with_unit.value_component]
[measure_with_unit.unit_component]

5.1.9.38 Paddle_blank

#1: The attributes are for the individual piping component.

#2: The attributes are for the definition of a family of piping components.

AIM element: #1: (piping_component_definition)
#2: (piping_component_class)

Source: 227

Rules: dependent_instantiable_product_context
product_context_discipline_type_constraint
value_for_application_context

Reference path: #1: (piping_component_definition <=
product_definition
{piping_component_definition
classification_item = piping_component_definition
classification_item <-
applied_classification_assignment.items[i]
applied_classification_assignment <=
classification_assignment
classification_assignment.assigned_classification ->
[group =>
blank_fitting_class]
[group
group.name = 'paddle blank']}
{product_definition
product_definition.formation ->
product_definition_formation
product_definition_formation.of_product ->
[product
classification_item = product
classification_item <-
applied_classification_assignment.items[i]

© ISO 2001 – All rights reserved

applied_classification_assignment <=
classification_assignment
classification_assignment.assigned_classification ->
(group)
(group <-
group_relationship.related_group
group_relationship
group_relationship.relating_group ->
group)
group.name = 'blank']
[product
product.frame_of_reference[i] ->
product_context<=
application_context_element
application_context_element.name = 'plant item']})
227
#2: (piping_component_class <=
[characterized_object]
[group])

5.1.9.38.1 paddle_length

#1: The attributes are for the individual piping component.

#2: The attributes are for the definition of a family of piping components.

AIM element: [measure_with_unit.value_component]
[measure_with_unit.unit_component]

Source: 41

Rules: subtype_exclusive_characterized_object
subtype_mandatory_shape_representation

Reference path: #1: (piping_component_definition <=
product_definition
characterized_product_definition = product_definition
characterized_product_definition
characterized_definition = characterized_product_definition
characterized_definition <-
property_definition.definition
property_definition =>
product_definition_shape <-
shape_aspect.of_shape
[shape_aspect <-
shape_aspect_relationship.relating_shape_aspect]
[shape_aspect <-
shape_aspect_relationship.related_shape_aspect]
shape_aspect_relationship =>
dimensional_location
dimensional_characteristic = dimensional_location
dimensional_characteristic <-
dimensional_characteristic_representation.dimension
dimensional_characteristic_representation

© ISO 2001 – All rights reserved

dimensional_characteristic_representation.representation ->
shape_dimension_representation <=
shape_representation <=
{representation
representation.name = 'blank fitting dimensional shape'}
representation
representation.items[i] ->
{representation_item
representation_item.name = 'paddle length'})
#2: (piping_component_class <=
characterized_object
characterized_definition = characterized_object
characterized_definition <-
property_definition.definition
property_definition
represented_definition = property_definition
represented_definition <-
property_definition_representation.definition
property_definition_representation
property_definition_representation.used_representation ->
{representation
representation.name = 'blank fitting class dimensions'}
representation
(representation.items[i] ->
{representation_item
(representation_item.name = 'maximum paddle length')
(representation_item.name = 'minimum paddle length')})
([representation.items[i] ->
{representation_item
representation_item.name = 'maximum paddle length'}]
[representation.items[i] ->
{representation_item
representation_item.name = 'minimum paddle length'}]))
representation_item =>
measure_representation_item <=
{measure_with_unit =>
length_measure_with_unit}
measure_with_unit
[measure_with_unit.value_component]
[measure_with_unit.unit_component]

5.1.9.38.2 paddle_width

#1: The attributes are for the individual piping component.

#2: The attributes are for the definition of a family of piping components.

AIM element: [measure_with_unit.value_component]
[measure_with_unit.unit_component]

Source: 41

Rules: subtype_exclusive_characterized_object

© ISO 2001 – All rights reserved

subtype_mandatory_shape_representation

Reference path: #1: (piping_component_definition <=
product_definition
characterized_product_definition = product_definition
characterized_product_definition
characterized_definition = characterized_product_definition
characterized_definition <-
property_definition.definition
property_definition =>
product_definition_shape <-
shape_aspect.of_shape
[shape_aspect <-
shape_aspect_relationship.relating_shape_aspect]
[shape_aspect <-
shape_aspect_relationship.related_shape_aspect]
shape_aspect_relationship =>
dimensional_location
dimensional_characteristic = dimensional_location
dimensional_characteristic <-
dimensional_characteristic_representation.dimension
dimensional_characteristic_representation
dimensional_characteristic_representation.representation ->
shape_dimension_representation <=
shape_representation <=
{representation
representation.name = 'blank fitting dimensional shape'}
representation
representation.items[i] ->
{representation_item
representation_item.name = 'paddle width'})
#2: (piping_component_class <=
characterized_object
characterized_definition = characterized_object
characterized_definition <-
property_definition.definition
property_definition
represented_definition = property_definition
represented_definition <-
property_definition_representation.definition
property_definition_representation
property_definition_representation.used_representation ->
{representation
representation.name = 'blank fitting class dimensions'}
representation
(representation.items[i] ->
{representation_item
(representation_item.name = 'maximum paddle width')
(representation_item.name = 'minimum paddle width')})
([representation.items[i] ->
{representation_item
representation_item.name = 'maximum paddle width'}]
[representation.items[i] ->
{representation_item

© ISO 2001 – All rights reserved

representation_item.name = 'minimum paddle width'}]))
representation_item =>
measure_representation_item <=
{measure_with_unit =>
length_measure_with_unit}
measure_with_unit
[measure_with_unit.value_component]
[measure_with_unit.unit_component]

5.1.9.39 Paddle_spacer

#1: The attributes are for the individual piping component.

#2: The attributes are for the definition of a family of piping components.

AIM element: #1: (piping_component_definition)
#2: (piping_component_class)

Source: 227

Rules: dependent_instantiable_product_context
product_context_discipline_type_constraint
value_for_application_context

Reference path: #1: (piping_component_definition <=
product_definition
{piping_component_definition
classification_item = piping_component_definition
classification_item <-
applied_classification_assignment.items[i]
applied_classification_assignment <=
classification_assignment
classification_assignment.assigned_classification ->
[group =>
spacer_fitting_class]
[group
group.name = 'paddle spacer']}
{product_definition
product_definition.formation ->
product_definition_formation
product_definition_formation.of_product ->
[product
classification_item = product
classification_item <-
applied_classification_assignment.items[i]
applied_classification_assignment <=
classification_assignment
classification_assignment.assigned_classification ->
(group)
(group <-
group_relationship.related_group
group_relationship
group_relationship.relating_group ->
group)

© ISO 2001 – All rights reserved

group.name = 'spacer']
[product
product.frame_of_reference[i] ->
product_context<=
application_context_element
application_context_element.name = 'plant item']})
#2: (piping_component_class <=
[characterized_object]
[group])

5.1.9.39.1 inside_diameter

#1: The attributes are for the individual piping component.

#2: The attributes are for the definition of a family of piping components.

AIM element: [measure_with_unit.value_component]
[measure_with_unit.unit_component]

Source: 41

Rules: subtype_exclusive_characterized_object
subtype_mandatory_shape_representation

Reference path: #1: (piping_component_definition <=
product_definition
characterized_product_definition = product_definition
characterized_product_definition
characterized_definition = characterized_product_definition
characterized_definition <-
property_definition.definition
property_definition =>
product_definition_shape <-
shape_aspect.of_shape
shape_aspect <-
dimensional_size.applies_to
dimensional_size
dimensional_characteristic = dimensional_size
dimensional_characteristic <-
dimensional_characteristic_representation.dimension
dimensional_characteristic_representation
dimensional_characteristic_representation.representation ->
shape_dimension_representation <=
shape_representation <=
{representation
representation.name = 'spacer fitting dimensional shape'}
representation
representation.items[i] ->
{representation_item
representation_item.name = 'inside diameter'})
#2: (piping_component_class <=
characterized_object
characterized_definition = characterized_object
characterized_definition <-

© ISO 2001 – All rights reserved

property_definition.definition
property_definition
represented_definition = property_definition
represented_definition <-
property_definition_representation.definition
property_definition_representation
property_definition_representation.used_representation ->
{representation
representation.name = 'spacer fitting class dimensions'}
representation
(representation.items[i] ->
{representation_item
(representation_item.name = 'maximum inside diameter')
(representation_item.name = 'minimum inside diameter')})
([representation.items[i] ->
{representation_item
representation_item.name = 'maximum inside diameter'}]
[representation.items[i] ->
{representation_item
representation_item.name = 'minimum inside diameter'}]))
representation_item =>
measure_representation_item <=
{measure_with_unit =>
length_measure_with_unit}
measure_with_unit
[measure_with_unit.value_component]
[measure_with_unit.unit_component]

5.1.9.39.2 paddle_length

#1: The attributes are for the individual piping component.

#2: The attributes are for the definition of a family of piping components.

AIM element: [measure_with_unit.value_component]
[measure_with_unit.unit_component]

Source: 41

Rules: subtype_exclusive_characterized_object
subtype_mandatory_shape_representation

Reference path: #1: (piping_component_definition <=
product_definition
characterized_product_definition = product_definition
characterized_product_definition
characterized_definition = characterized_product_definition
characterized_definition <-
property_definition.definition
property_definition =>
product_definition_shape <-
shape_aspect.of_shape
[shape_aspect <-
shape_aspect_relationship.relating_shape_aspect]

© ISO 2001 – All rights reserved

```
[shape_aspect <-
shape_aspect_relationship.related_shape_aspect]
shape_aspect_relationship =>
dimensional_location
dimensional_characteristic = dimensional_location
dimensional_characteristic <-
dimensional_characteristic_representation.dimension
dimensional_characteristic_representation
dimensional_characteristic_representation.representation ->
shape_dimension_representation <=
shape_representation <=
{representation
representation.name = 'spacer fitting dimensional shape'}
representation
representation.items[i] ->
{representation_item
representation_item.name = 'paddle length'})
#2: (piping_component_class <=
characterized_object
characterized_definition = characterized_object
characterized_definition <-
property_definition.definition
property_definition
represented_definition = property_definition
represented_definition <-
property_definition_representation.definition
property_definition_representation
property_definition_representation.used_representation ->
{representation
representation.name = 'spacer fitting class dimensions'}
representation
(representation.items[i] ->
{representation_item
(representation_item.name = 'maximum paddle length')
(representation_item.name = 'minimum paddle length')})
([representation.items[i] ->
{representation_item
representation_item.name = 'maximum paddle length'}]
[representation.items[i] ->
{representation_item
representation_item.name = 'minimum paddle length'}]))
representation_item =>
measure_representation_item <=
{measure_with_unit =>
length_measure_with_unit}
measure_with_unit
[measure_with_unit.value_component]
[measure_with_unit.unit_component]
```

5.1.9.39.3 paddle_width

#1: The attributes are for the individual piping component.

© ISO 2001 – All rights reserved

#2: The attributes are for the definition of a family of piping components.

AIM element: [measure_with_unit.value_component]
[measure_with_unit.unit_component]

Source: 41

Rules: subtype_exclusive_characterized_object
subtype_mandatory_shape_representation

Reference path: #1: (piping_component_definition <=
product_definition
characterized_product_definition = product_definition
characterized_product_definition
characterized_definition = characterized_product_definition
characterized_definition <-
property_definition.definition
property_definition =>
product_definition_shape <-
shape_aspect.of_shape
[shape_aspect <-
shape_aspect_relationship.relating_shape_aspect]
[shape_aspect <-
shape_aspect_relationship.related_shape_aspect]
shape_aspect_relationship =>
dimensional_location
dimensional_characteristic = dimensional_location
dimensional_characteristic <-
dimensional_characteristic_representation.dimension
dimensional_characteristic_representation
dimensional_characteristic_representation.representation ->
shape_dimension_representation <=
shape_representation <=
{representation
representation.name = 'spacer fitting dimensional shape'}
representation
representation.items[i] ->
{representation_item
representation_item.name = 'paddle width'})
#2: (piping_component_class <=
characterized_object
characterized_definition = characterized_object
characterized_definition <-
property_definition.definition
property_definition
represented_definition = property_definition
represented_definition <-
property_definition_representation.definition
property_definition_representation
property_definition_representation.used_representation ->
{representation
representation.name = 'spacer fitting class dimensions'}
representation
(representation.items[i] ->

© ISO 2001 – All rights reserved

{representation_item
(representation_item.name = 'maximum paddle width')
(representation_item.name = 'minimum paddle width')})
([representation.items[i] ->
{representation_item
representation_item.name = 'maximum paddle width'}]
[representation.items[i] ->
{representation_item
representation_item.name = 'minimum paddle width'}]))
representation_item =>
measure_representation_item <=
{measure_with_unit =>
length_measure_with_unit}
measure_with_unit
[measure_with_unit.value_component]
[measure_with_unit.unit_component]

5.1.9.40 Perforated_plate

#1: The attributes are for the individual piping component.

#2: The attributes are for the definition of a family of piping components.

AIM element: #1: (piping_component_definition)
#2: (piping_component_class)

Source: 227

Rules: dependent_instantiable_product_context
product_context_discipline_type_constraint
value_for_application_context

Reference path: #1: (piping_component_definition <=
product_definition
{piping_component_definition
classification_item = piping_component_definition
classification_item <-
applied_classification_assignment.items[i]
applied_classification_assignment <=
classification_assignment
classification_assignment.assigned_classification ->
[group =>
pipe_closure_fitting_class]
[group
group.name = 'perforated plate']
[group <-
group_relationship.related_group
{group_relationship
group_relationship.name = 'class hierarchy'}
group_relationship
group_relationship.relating_group ->
group
group.name = ' plate']}}
{product_definition

© ISO 2001 – All rights reserved

product_definition.formation ->
product_definition_formation
product_definition_formation.of_product ->
[product
classification_item = product
classification_item <-
applied_classification_assignment.items[i]
applied_classification_assignment <=
{classification_assignment
classification_assignment.role ->
group_role
group_role.name = 'plant item type'}
classification_assignment
classification_assignment.assigned_classification ->
(group)
(group <-
group_relationship.related_group
group_relationship
group_relationship.relating_group ->
group)
group.name = 'perforated plate']
[product
product.frame_of_reference[i] ->
product_context<=
application_context_element
application_context_element.name = 'plant item']})
#2: (piping_component_class <=
[characterized_object]
[group])
{[group =>
pipe_closure_fitting_class]
[(group)
(group <-
group_relationship.related_group
group_relationship
group_relationship.relating_group ->
group)
group.name = 'perforated plate']
[group <-
group_relationship.related_group
{group_relationship
group_relationship.name = 'class hierarchy'}
group_relationship
group_relationship.relating_group ->
group
group.name = ' plate']}

5.1.9.40.1 end_2_connector

AIM element: plant_item_connector

Source: 227

© ISO 2001 – All rights reserved

Reference path: piping_component_definition <=
product_definition
characterized_product_definition = product_definition
characterized_product_definition
characterized_definition = characterized_product_definition
characterized_definition <-
property_definition.definition
property_definition =>
product_definition_shape <-
shape_aspect.of_shape
{shape_aspect
shape_aspect.description = 'end 2'}
shape_aspect =>
plant_item_connector

5.1.9.40.2 hole_diameter

#1: The attributes are for the individual piping component.

#2: The attributes are for the definition of a family of piping components.

AIM element: [measure_with_unit.value_component]
[measure_with_unit.unit_component]

Source: 41

Rules: subtype_exclusive_characterized_object
subtype_mandatory_shape_representation

Reference path: #1: (piping_component_definition <=
product_definition
characterized_product_definition = product_definition
characterized_product_definition
characterized_definition = characterized_product_definition
characterized_definition <-
property_definition.definition
property_definition =>
product_definition_shape <-
shape_aspect.of_shape
[shape_aspect <-
dimensional_size.applies_to
dimensional_size
dimensional_characteristic = dimensional_size
dimensional_characteristic <-
dimensional_characteristic_representation.dimension
dimensional_characteristic_representation
dimensional_characteristic_representation.representation ->
shape_dimension_representation <=
shape_representation <=
{representation
representation.name = 'pipe closure fitting dimensional shape'}
representation
representation.items[i] ->
{representation_item

© ISO 2001 – All rights reserved

representation_item.name = 'hole diameter'})
#2: (piping_component_class <=
characterized_object
characterized_definition = characterized_object
characterized_definition <-
property_definition.definition
property_definition
represented_definition = property_definition
represented_definition <-
property_definition_representation.definition
property_definition_representation
property_definition_representation.used_representation ->
{representation
representation.name = 'pipe closure fitting class dimensions'}
representation
(representation.items[i] ->
{representation_item
(representation_item.name = 'maximum hole diameter')
(representation_item.name = 'minimum hole diameter')})
([representation.items[i] ->
{representation_item
representation_item.name = 'maximum hole diameter'}]
[representation.items[i] ->
{representation_item
representation_item.name = 'minimum hole diameter'}]))
representation_item =>
measure_representation_item <=
{measure_with_unit =>
length_measure_with_unit}
measure_with_unit
[measure_with_unit.value_component]
[measure_with_unit.unit_component]

5.1.9.41 Pipe

#1: The attributes are for the individual piping component.

#2: The attributes are for the definition of a family of piping components.

AIM element: #1: (piping_component_definition)
#2: (piping_component_class)

Source: 227

Rules: dependent_instantiable_product_context
product_context_discipline_type_constraint
value_for_application_context

Reference path: (piping_component_definition <=
product_definition
{product_definition
product_definition.formation ->
product_definition_formation
product_definition_formation.of_product ->

© ISO 2001 – All rights reserved

[product
classification_item = product
classification_item <-
applied_classification_assignment.items[i]
applied_classification_assignment <=
classification_assignment
classification_assignment.assigned_classification ->
(group)
(group <-
group_relationship.related_group
group_relationship
group_relationship.relating_group ->
group)
group.name = 'pipe'}]
[product
product.frame_of_reference[i] ->
product_context<=
application_context_element
application_context_element.name = 'plant item']})
(piping_component_class <=
[characterized_object]
[group])

5.1.9.41.1 end_1_connector

AIM element: plant_item_connector

Source: 227

Reference path: #1: (piping_component_definition <=
product_definition
characterized_product_definition
characterized_definition = characterized_product_definition)
#2: (piping_component_class <=
[characterized_object]
[group]
characterized_definition = characterized_object)
characterized_definition <-
property_definition.definition
product_definition
characterized_product_definition = product_definition
characterized_product_definition
characterized_definition = characterized_product_definition
characterized_definition <-
property_definition.definition
property_definition =>
product_definition_shape <-
shape_aspect.of_shape
{shape_aspect
shape_aspect.description = 'end 1'}
shape_aspect =>
plant_item_connector

© ISO 2001 – All rights reserved

5.1.9.41.2 end_2_connector

AIM element: plant_item_connector

Source: 227

Reference path: #1: (piping_component_definition <=
product_definition
characterized_product_definition
characterized_definition = characterized_product_definition)
#2: (piping_component_class <=
[characterized_object]
[group]
characterized_definition = characterized_object)
characterized_definition <-
property_definition.definition
product_definition
characterized_product_definition = product_definition
characterized_product_definition
characterized_definition = characterized_product_definition
characterized_definition <-
property_definition.definition
property_definition =>
product_definition_shape <-
shape_aspect.of_shape
{shape_aspect
shape_aspect.description = 'end 2'}
shape_aspect =>
plant_item_connector

5.1.9.41.3 additional_length

#1: The attributes are for the individual piping component.

#2: The attributes are for the definition of a family of piping components.

AIM element: [measure_with_unit.value_component]
[measure_with_unit.unit_component]

Source: 41

Rules: subtype_exclusive_characterized_object
subtype_mandatory_shape_representation

Reference path: #1: (piping_component_definition <=
product_definition
characterized_product_definition = product_definition
characterized_product_definition
characterized_definition = characterized_product_definition
characterized_definition <-
property_definition.definition
property_definition =>
product_definition_shape <-
shape_aspect.of_shape

© ISO 2001 – All rights reserved

```
[shape_aspect <-
shape_aspect_relationship.relating_shape_aspect]
[shape_aspect <-
shape_aspect_relationship.related_shape_aspect]
shape_aspect_relationship =>
dimensional_location
dimensional_characteristic = dimensional_location
dimensional_characteristic <-
dimensional_characteristic_representation.dimension
dimensional_characteristic_representation
dimensional_characteristic_representation.representation ->
shape_dimension_representation <=
shape_representation <=
{representation
representation.name = 'pipe dimensional shape'}
representation
representation.items[i] ->
{representation_item
representation_item.name = 'additional length'})
#2: (piping_component_class <=
characterized_object
characterized_definition = characterized_object
characterized_definition <-
property_definition.definition
property_definition
represented_definition = property_definition
represented_definition <-
property_definition_representation.definition
property_definition_representation
property_definition_representation.used_representation ->
{representation
representation.name = 'spacer fitting class dimensions'}
representation
(representation.items[i] ->
{representation_item
(representation_item.name = 'maximum additional length')
(representation_item.name = 'minimum additional length')})
([representation.items[i] ->
{representation_item
representation_item.name = 'maximum additional length'}]
[representation.items[i] ->
{representation_item
representation_item.name = 'minimum additional length'}]))
representation_item =>
measure_representation_item <=
{measure_with_unit =>
length_measure_with_unit}
measure_with_unit
[measure_with_unit.value_component]
[measure_with_unit.unit_component]
```

5.1.9.42 Pipe_closure

© ISO 2001 – All rights reserved

#1: The attributes are for the individual piping component.

#2: The attributes are for the definition of a family of piping components.

AIM element: #1: (piping_component_definition)
#2: (piping_component_class)

Source: 227

Rules: dependent_instantiable_product_context
product_context_discipline_type_constraint
value_for_application_context

Reference path: #1: (piping_component_definition <=
product_definition
{product_definition
product_definition.formation ->
product_definition_formation
product_definition_formation.of_product ->
[product
classification_item = product
classification_item <-
applied_classification_assignment.items[i]
applied_classification_assignment <=
classification_assignment
classification_assignment.assigned_classification ->]
[product
product.frame_of_reference[i] ->
(group)
(group <-
group_relationship.related_group
group_relationship
group_relationship.relating_group ->
group)
group.name = 'pipe closure']
product_context<=
application_context_element
application_context_element.name = 'plant item']}

#2: (piping_component_class <=
[characterized_object]
[group])
{(group)
(group <-
group_relationship.related_group
group_relationship
group_relationship.relating_group ->
group)
group.name = 'pipe closure'}

5.1.9.42.1 cap_or_plug

AIM element: group.name

© ISO 2001 – All rights reserved

Source: 41

Reference path: piping_component_definition
classification_item = piping_component_definition
classification_item <-
applied_classification_assignment.items[i]
applied_classification_assignment <=
classification_assignment
classification_assignment.assigned_classification ->
{group =>
pipe_closure_fitting_class}
group
group.name
{(group.name = 'cap')
(group.name = 'plug')}

5.1.9.42.2 end_1_connector

AIM element: plant_item_connector

Source: 227

Reference path: piping_component_definition <=
product_definition
characterized_product_definition = product_definition
characterized_product_definition
characterized_definition = characterized_product_definition
characterized_definition <-
property_definition.definition
property_definition =>
product_definition_shape <-
shape_aspect.of_shape
{shape_aspect
shape_aspect.description = 'end 1'}
shape_aspect =>
plant_item_connector

5.1.9.42.3 height

#1: The attributes are for the individual piping component.

#2: The attributes are for the definition of a family of piping components.

AIM element: [measure_with_unit.value_component]
[measure_with_unit.unit_component]

Source: 41

Rules: subtype_exclusive_characterized_object
subtype_mandatory_shape_representation

Reference path: #1: (piping_component_definition <=
product_definition

© ISO 2001 – All rights reserved

```
characterized_product_definition = product_definition
characterized_product_definition
characterized_definition = characterized_product_definition
characterized_definition <-
property_definition.definition
property_definition =>
product_definition_shape <-
shape_aspect.of_shape
[shape_aspect <-
shape_aspect_relationship.relating_shape_aspect]
[shape_aspect <-
shape_aspect_relationship.related_shape_aspect]
shape_aspect_relationship =>
dimensional_location
dimensional_characteristic = dimensional_location
dimensional_characteristic <-
dimensional_characteristic_representation.dimension
dimensional_characteristic_representation
dimensional_characteristic_representation.representation ->
shape_dimension_representation <=
shape_representation <=
{representation
representation.name = 'pipe closure fitting dimensional shape'}
representation
representation.items[i] ->
{representation_item
representation_item.name = 'height'})
#2: (piping_component_class <=
characterized_object
characterized_definition = characterized_object
characterized_definition <-
property_definition.definition
property_definition
represented_definition = property_definition
represented_definition <-
property_definition_representation.definition
property_definition_representation
property_definition_representation.used_representation ->
{representation
representation.name = 'pipe closure fitting class dimensions'}
representation
(representation.items[i] ->
{representation_item
(representation_item.name = 'maximum height')
(representation_item.name = 'minimum height')})
([representation.items[i] ->
{representation_item
representation_item.name = 'maximum height'}]
[representation.items[i] ->
{representation_item
representation_item.name = 'minimum height'}]))
representation_item =>
measure_representation_item <=
{measure_with_unit =>
```


© ISO 2001 – All rights reserved

length_measure_with_unit}
measure_with_unit
[measure_with_unit.value_component]
[measure_with_unit.unit_component]

5.1.9.42.4 shape_type

AIM element: group.description

Source: 41

Reference path: piping_component_definition
classification_item = piping_component_definition
classification_item <-
applied_classification_assignment.items[i]
applied_classification_assignment <=
{classification_assignment
classification_assignment.role ->
classification_role
classification_role.name = 'pipe closure fitting type classification'}
classification_assignment
classification_assignment.assigned_classification ->
{group =>
pipe_closure_fitting_class}
group
group.description
{(group.description = 'square')
(group.description = 'round')}

5.1.9.42.5 end_1_connector

AIM element: plant_item_connector

Source: 227

Reference path: piping_component_definition <=
product_definition
characterized_product_definition = product_definition
characterized_product_definition
characterized_definition = characterized_product_definition
characterized_definition <-
property_definition.definition
property_definition =>
product_definition_shape <-
shape_aspect.of_shape
{shape_aspect
shape_aspect.description = 'end 1'}
shape_aspect =>
plant_item_connector

5.1.9.43 Piping_component

© ISO 2001 – All rights reserved

#1: The attributes are for the individual piping component.

#2: The attributes are for the definition of a family of piping components.

AIM element: #1 (piping_component_definition)
#2 (piping_component_class)

Source: 227

Rules: dependent_instantiable_product_context
product_context_discipline_type_constraint
value_for_application_context

Reference path: (piping_component_definition <=
product_definition
{product_definition
product_definition.formation ->
product_definition_formation
product_definition_formation.of_product ->
product
product.frame_of_reference[i] ->
product_context <=
application_context_element
application_context_element.name = 'plant item'})
(piping_component_class <=
[characterized_object]
[group])

5.1.9.43.1 side_connector

AIM element: plant_item_connector

Source: 227

Reference path: piping_component_definition <=
product_definition
characterized_product_definition = product_definition
characterized_product_definition
characterized_definition = characterized_product_definition
characterized_definition <-
property_definition.definition
property_definition =>
product_definition_shape <-
shape_aspect.of_shape
{shape_aspect
shape_aspect.description = 'side'}
shape_aspect =>
plant_item_connector

5.1.9.43.2 standard_point

AIM element: cartesian_point

© ISO 2001 – All rights reserved

Source: 42

Reference path: piping_component_definition <=
product_definition
characterized_product_definition = product_definition
characterized_product_definition
characterized_definition = characterized_product_definition
characterized_definition <-
property_definition.definition
property_definition
represented_definition = property_definition
represented_definition <-
property_definition_representation.definition
property_definition_representation
property_definition_representation.used_representation ->
{representation
representation.name = 'internal position'}
representation
representation.items [i] ->
{representation_item
representation_item.name = 'standard point'}
representation_item =>
geometric_representation_item =>
point =>
cartesian_point

5.1.9.43.3 pmi_record

AIM element: document.id

Source: 41

Reference path: piping_component_definition <=
product_definition
document_item = product_definition
document_item <-
applied_document_reference.items[i]
applied_document_reference <=
document_reference
document_reference.assigned_document ->
{document
document.kind ->
document_type
document_type.product_data_type = 'pmi record'}
document
document.id

5.1.9.43.4 mill_sheet_number

AIM element: document.id

Source: 41

© ISO 2001 – All rights reserved

Reference path: piping_component_definition <=
product_definition
document_item = product_definition
document_item <-
applied_document_reference.items[i]
applied_document_reference <=
document_reference
document_reference.assigned_document ->
{document
document.kind ->
document_type
document_type.product_data_type = 'mill sheet'}
document
document.id

5.1.9.43.5 piping_component to family_definition

AIM element: IDENTICAL MAPPING

5.1.9.44 Piping_size_description

#1: The attributes are for the definition of a family of piping components.

#2: The attributes are for the individual piping component.

AIM element: #1: (shape_dimension_representation)
#2: (representation)

Source: 43, 47

Reference path: {(shape_dimension_representation <=
shape_representation <=
representation)
(representation)
document_item = representation
document_item <-
applied_document_reference.items[i]
applied_document_reference <=
document_reference
document_reference.assigned_document ->
document
document.kind ->
document_type
document_type.product_data_type = 'dimensional standard'}
#1: ({(shape_dimension_representation <=
shape_representation <=
{representation
representation.name = 'piping component dimensions'})
({representation
representation.name = 'piping component size'})
representation <-
property_definition_representation.used_representation
property_definition_representation

© ISO 2001 – All rights reserved

property_definition_representation.definition ->
(represented_definition
represented_definition = property_definition
{property_definition =>
product_definition_shape}
property_definition
property_definition.definition ->
characterized_definition
characterized_definition = characterized_product_definition
characterized_product_definition
characterized_product_definition = product_definition
product_definition =>
piping_component_definition)(represented_definition
represented_definition = shape_aspect
shape_aspect =>
plant_item_connector)})
#2: ({[representation
representation.name = 'piping component class size']
[representation <-
property_definition_representation.used_representation
property_definition_representation
property_definition_representation.definition ->
represented_definition
represented_definition = property_definition
property_definition
property_definition.definition ->
characterized_definition
characterized_definition = characterized_object
characterized_object =>
piping_component_class]})

5.1.9.44.1 dimensional_standard

#1: The attributes are for the definition of a family of piping components.

#2: The attributes are for the individual piping component.

AIM element: document

Source: 41

Rules: subtype_mandatory_shape_representation

Reference path: #1: (shape_dimension_representation <=
shape_representation <=
representation)
#2: (representation)
document_item = representation
document_item <-
applied_document_reference.items[i]
applied_document_reference <=
document_reference
document_reference.assigned_document ->
document

© ISO 2001 – All rights reserved

{document.kind ->
document_type
document_type.product_data_type = 'dimensional standard'}

5.1.9.44.2 ovality_allowance

#1: The attributes are for the definition of a family of piping components.

#2: The attributes are for the individual piping component.

AIM element: [measure_with_unit.value_component]
[measure_with_unit.unit_component]

Source: 41

Rules: subtype_mandatory_shape_representation

Reference path: #1: (shape_dimension_representation <=
shape_representation <=
representation)
#2: (representation)
representation.items[i] ->
{representation_item
(representation_item.name = 'ovality upper limit')
(representation_item.name = 'ovality lower limit')}
representation_item =>
measure_representation_item <=
{measure_with_unit =>
length_measure_with_unit}
measure_with_unit
[measure_with_unit.value_component]
[measure_with_unit.unit_component]

5.1.9.45 Piping_spool

AIM element: piping_spool_definition

Source: 227

Rules: dependent_instantiable_product_context
product_context_discipline_type_constraint
value_for_application_context

Reference path: piping_spool_definition <=
product_definition
{product_definition
product_definition.formation ->
product_definition_formation
product_definition_formation.of_product ->
product
product.frame_of_reference[i] ->
product_context<=
application_context_element

© ISO 2001 – All rights reserved

application_context_element.name = 'plant item'}

5.1.9.45.1 tag_number

AIM element: product.id

Source: 41

Reference path: piping_spool_definition <=
product_definition
product_definition.formation ->
product_definition_formation
product_definition_formation.of_product ->
product
product.id

5.1.9.45.2 piping_type

AIM element: group.name

Source: 41

Reference path: piping_spool_definition <=
product_definition
classification_item = product_definition
classification_item <-
applied_classification_assignment.items[i]
applied_classification_assignment <=
{classification_assignment
classification_assignment.role ->
group_role
group_role.name = 'piping type'}
classification_assignment
classification_assignment.assigned_classification ->
group
group.name

5.1.9.45.3 temporary_flag

AIM element: application_context.application

Source: 41

Rules: dependent_instantiable_product_context
product_context_discipline_type_constraint
value_for_application_context

Reference path: piping_spool_definition <=
product_definition
product_definition.formation ->
product_definition_formation
product_definition_formation.of_product ->
product.frame_of_reference[i] ->

© ISO 2001 – All rights reserved

product_context <=
application_context_element
application_context_element.frame_of_reference ->
application_context
application_context.application
{(application_context.application = 'temporary piece')
(application_context.application = 'permanent piece')}

5.1.9.46 Piping_support

AIM element: product

Source: 41

Rules: dependent_instantiable_product_context
product_context_discipline_type_constraint
value_for_application_context

Reference path: {[product
classification_item = product
classification_item <-
applied_classification_assignment.items[i]
applied_classification_assignment <=
classification_assignment
classification_assignment.assigned_classification ->
[group
group.name = 'piping support']
[group
group_relationship.related_group
group_relationship
{group_relationship.name = 'usage classification'}
group_relationship.relating_group ->
group
group.name = 'support component']]
[product
product.frame_of_reference[i] ->
product_context <=
application_context_element
application_context_element.name = 'plant item']}

5.1.9.46.1 orientation

AIM element: axis2_placement_3d.ref_direction

Source: 42

Reference path: product
product_definition_formation.of_product
product_definition_formation
product_definition.formation
product_definition
characterized_product_definition = product_definition
characterized_product_definition

© ISO 2001 – All rights reserved

characterized_definition = characterized_product_definition
characterized_definition <-
property_definition.definition
property_definition =>
product_definition_shape <-
shape_aspect.of_shape
{shape_aspect.description = 'location point'}
shape_aspect
represented_definition = shape_aspect
represented_definition <-
property_definition_representation.definition
property_definition_representation
property_definition_representation.used_representation ->
representation
representation.items[i] ->
{representation_item
representation_item.name = 'support orientation'}
representation_item =>
geometric_representation_item =>
placement =>
axis2_placement_3d
axis2_placement_3d.ref_direction

5.1.9.46.2 location_point

AIM element: placement.location

Source: 42

Reference path: product
product_definition_formation.of_product
product_definition_formation
product_definition.formation
product_definition
characterized_product_definition = product_definition
characterized_product_definition
characterized_definition = characterized_product_definition
characterized_definition <-
property_definition.definition
property_definition =>
product_definition_shape <-
shape_aspect.of_shape
{shape_aspect.description = 'location point'}
shape_aspect
represented_definition = shape_aspect
represented_definition <-
property_definition_representation.definition
property_definition_representation
property_definition_representation.used_representation ->
representation
representation.items[i] ->
{representation_item
representation_item.name = 'support location'}
representation_item =>

© ISO 2001 – All rights reserved

geometric_representation_item =>
placement
placement.location

5.1.9.46.3 end_1_connector

AIM element: plant_item_connector

Source: 227

Reference path: product
product_definition_formation.of_product
product_definition_formation
product_definition.formation
product_definition
characterized_product_definition = product_definition
characterized_product_definition
characterized_definition = characterized_product_definition
characterized_definition <-
property_definition.definition
property_definition =>
product_definition_shape <-
shape_aspect.of_shape
{shape_aspect
shape_aspect.description = 'end 1'}
shape_aspect =>
plant_item_connector

5.1.9.47 Plate

#1: The attributes are for the individual piping component.

#2: The attributes are for the definition of a family of piping components.

AIM element: #1: (piping_component_definition)
#2: (piping_component_class)

Source: 227

Rules: dependent_instantiable_product_context
product_context_discipline_type_constraint
value_for_application_context

Reference path: #1: (piping_component_definition <=
product_definition
{piping_component_definition
classification_item = piping_component_definition
classification_item <-
applied_classification_assignment.items[i]
applied_classification_assignment <=
classification_assignment
classification_assignment.assigned_classification ->
[group =>

© ISO 2001 – All rights reserved

pipe_closure_fitting_class]
[group
group.name = 'plate']}
{product_definition
product_definition.formation ->
product_definition_formation
product_definition_formation.of_product ->
[product
classification_item = product
classification_item <-
applied_classification_assignment.items[i]
applied_classification_assignment <=
{classification_assignment
classification_assignment.role ->
group_role
group_role.name = 'plant item type'}
classification_assignment
classification_assignment.assigned_classification ->
(group)
(group <-
group_relationship.related_group
group_relationship
group_relationship.relating_group ->
group)
group.name = ' plate'}
[product
product.frame_of_reference[i] ->
product_context<=
application_context_element
application_context_element.name = 'plant item']})
#2: (piping_component_class <=
[characterized_object]
[group])
{[group =>
pipe_closure_fitting_class]
[(group)
(group <-
group_relationship.related_group
group_relationship
group_relationship.relating_group ->
group)
group.name = ' plate']}

5.1.9.47.1 thickness

#1: The attributes are for the individual piping component.

#2: The attributes are for the definition of a family of piping components.

AIM element: [measure_with_unit.value_component]
[measure_with_unit.unit_component]

Source: 41

© ISO 2001 – All rights reserved

Rules: subtype_exclusive_characterized_object
subtype_mandatory_shape_representation

Reference path: #1: (piping_component_definition <=
product_definition
characterized_product_definition = product_definition
characterized_product_definition
characterized_definition = characterized_product_definition
characterized_definition <-
property_definition.definition
property_definition =>
product_definition_shape <-
shape_aspect.of_shape
[shape_aspect <-
shape_aspect_relationship.relating_shape_aspect]
[shape_aspect <-
shape_aspect_relationship.related_shape_aspect]
shape_aspect_relationship =>
dimensional_location
dimensional_characteristic = dimensional_location
dimensional_characteristic <-
dimensional_characteristic_representation.dimension
dimensional_characteristic_representation
dimensional_characteristic_representation.representation ->
shape_dimension_representation <=
shape_representation <=
{representation
representation.name = 'pipe closure fitting dimensional shape'}
representation
representation.items[i] ->
{representation_item
representation_item.name = 'thickness'})
#2: (piping_component_class <=
characterized_object
characterized_definition = characterized_object
characterized_definition <-
property_definition.definition
property_definition
represented_definition = property_definition
represented_definition <-
property_definition_representation.definition
property_definition_representation
property_definition_representation.used_representation ->
{representation
representation.name = 'pipe closure fitting class dimensions'}
representation
(representation.items[i] ->
{representation_item
(representation_item.name = 'maximum thickness')
(representation_item.name = 'minimum thickness')})
([representation.items[i] ->
{representation_item
representation_item.name = 'maximum thickness'}]
[representation.items[i] ->

© ISO 2001 – All rights reserved

{representation_item
representation_item.name = 'minimum thickness'}]))
representation_item =>
measure_representation_item <=
{measure_with_unit =>
length_measure_with_unit}
measure_with_unit
[measure_with_unit.value_component]
[measure_with_unit.unit_component]

5.1.9.48 Plug

#1: The attributes are for the individual piping component.

#2: The attributes are for the definition of a family of piping components.

AIM element: #1: (piping_component_definition)
#2: (piping_component_class)

Source: 227

Rules: dependent_instantiable_product_context
product_context_discipline_type_constraint
value_for_application_context

Reference path: #1: (piping_component_definition <=
product_definition
{piping_component_definition
classification_item = piping_component_definition
classification_item <-
applied_classification_assignment.items[i]
applied_classification_assignment <=
classification_assignment
classification_assignment.assigned_classification ->
[group =>
pipe_closure_fitting_class]
[group
group.name = 'plug']}
{product_definition
product_definition.formation ->
product_definition_formation
product_definition_formation.of_product ->
[product
classification_item = product
classification_item <-
applied_classification_assignment.items[i]
applied_classification_assignment <=
{classification_assignment
classification_assignment.role ->
group_role
group_role.name = 'plant item type'}
classification_assignment
classification_assignment.assigned_classification ->
(group)

© ISO 2001 – All rights reserved

(group <-
group_relationship.related_group
group_relationship
group_relationship.relating_group ->
group)
group.name = ' plug'}
[product
product.frame_of_reference[i] ->
product_context<=
application_context_element
application_context_element.name = 'plant item']})
#2: (piping_component_class <=
[characterized_object]
[group])
{[group =>
pipe_closure_fitting_class]
[(group)
(group <-
group_relationship.related_group
group_relationship
group_relationship.relating_group ->
group)
group.name = ' plug']}

5.1.9.48.1 height

#1: The attributes are for the individual piping component.

#2: The attributes are for the definition of a family of piping components.

AIM element: [measure_with_unit.value_component]
[measure_with_unit.unit_component]

Source: 41

Rules: subtype_exclusive_characterized_object
subtype_mandatory_shape_representation

Reference path: #1: (piping_component_definition <=
product_definition
characterized_product_definition = product_definition
characterized_product_definition
characterized_definition = characterized_product_definition
characterized_definition <-
property_definition.definition
property_definition =>
product_definition_shape <-
shape_aspect.of_shape
[shape_aspect <-
shape_aspect_relationship.relating_shape_aspect]
[shape_aspect <-
shape_aspect_relationship.related_shape_aspect]
shape_aspect_relationship =>
dimensional_location

© ISO 2001 – All rights reserved

dimensional_characteristic = dimensional_location
dimensional_characteristic <-
dimensional_characteristic_representation.dimension
dimensional_characteristic_representation
dimensional_characteristic_representation.representation ->
shape_dimension_representation <=
shape_representation <=
{representation
representation.name = 'pipe closure fitting dimensional shape'}
representation
representation.items[i] ->
{representation_item
representation_item.name = 'height'})
#2: (piping_component_class <=
characterized_object
characterized_definition = characterized_object
characterized_definition <-
property_definition.definition
property_definition
represented_definition = property_definition
represented_definition <-
property_definition_representation.definition
property_definition_representation
property_definition_representation.used_representation ->
{representation
representation.name = 'pipe closure fitting class dimensions'}
representation
(representation.items[i] ->
{representation_item
(representation_item.name = 'maximum height')
(representation_item.name = 'minimum height')})
([representation.items[i] ->
{representation_item
representation_item.name = 'maximum height'}]
[representation.items[i] ->
{representation_item
representation_item.name = 'minimum height'}]))
representation_item =>
measure_representation_item <=
{measure_with_unit =>
length_measure_with_unit}
measure_with_unit
[measure_with_unit.value_component]
[measure_with_unit.unit_component]

5.1.9.49 Pressure_class

#1: The attributes are for an individual piping component.

#2: The attributes are for the definition of a family of piping components.

AIM element: representation

© ISO 2001 – All rights reserved

Source: 43

Reference path: #1: ({[representation
representation.name = 'piping component size']
[representation <-
property_definition_representation.used_representation
property_definition_representation
property_definition_representation.definition ->
(represented_definition
represented_definition = property_definition
property_definition
property_definition.definition ->
characterized_definition
characterized_definition = characterized_product_definition
characterized_product_definition
characterized_product_definition = product_definition
product_definition =>
piping_component_definition)
(represented_definition
represented_definition = shape_aspect
shape_aspect =>
plant_item_connector)]})
#2: ({[representation
representation.name = 'piping component class size']
[representation <-
property_definition_representation.used_representation
property_definition_representation
property_definition_representation.definition ->
represented_definition
represented_definition = property_definition
property_definition
property_definition.definition ->
characterized_definition
characterized_definition = characterized_object
characterized_object =>
piping_component_class]})

5.1.9.49.1 nominal_size

#1: The attributes are for an individual piping component.

#2: The attributes are for the definition of a family of piping components.

AIM element: [measure_with_unit.value_component]
[measure_with_unit.unit_component]

Source: 41

Reference path: representation
#1: ({representation
representation.name = 'piping component size'}
representation.items[i] ->
{representation_item
representation_item.name = 'nominal size'})

© ISO 2001 – All rights reserved

#2: ({representation
representation.name = 'piping component class size'}
(representation.items[i] ->
{representation_item
(representation_item.name = 'maximum nominal size')
(representation_item.name = 'minimum nominal size')})
([representation.items[i] ->
{representation_item
representation_item.name = 'maximum nominal size'}]
[representation.items[i] ->
{representation_item
representation_item.name = 'minimum nominal size'}])
representation_item =>
measure_representation_item <=
measure_with_unit
[measure_with_unit.value_component]
[measure_with_unit.unit_component]

5.1.9.49.2 pressure_rating

#1: The attributes are for an individual piping component.

#2: The attributes are for the definition of a family of piping components.

AIM element: [measure_with_unit.value_component]
[measure_with_unit.unit_component]

Source: 41

Reference path: representation
#1: ({representation
representation.name = 'piping component size'}
representation.items[i] ->
{representation_item
representation_item.name = 'pressure rating'})
#2: ({representation
representation.name = 'piping component class size'}
(representation.items[i] ->
{representation_item
(representation_item.name = 'maximum pressure rating')
(representation_item.name = 'minimum pressure rating')})
([representation.items[i] ->
{representation_item
representation_item.name = 'maximum pressure rating'}]
[representation.items[i] ->
{representation_item
representation_item.name = 'minimum pressure rating'}])
representation_item =>
measure_representation_item <=
measure_with_unit
[{measure_with_unit.value_component ->
measure_value
measure_value = ratio_measure}
measure_with_unit.value_component]

© ISO 2001 – All rights reserved

[{measure_with_unit.unit_component ->
unit
unit = derived_unit}
measure_with_unit.unit_component]

5.1.9.50 Reducer

#1: The attributes are for an individual piping component.

#2: The attributes are for the definition of a family of piping components.

AIM element: #1: (piping_component_definition)
#2: (piping_component_class)

Source: 227

Rules: dependent_instantiable_product_context
product_context_discipline_type_constraint
value_for_application_context

Reference path: #1: (piping_component_definition <=
product_definition
{product_definition
product_definition.formation ->
product_definition_formation
product_definition_formation.of_product ->
[product
classification_item = product
classification_item <-
applied_classification_assignment.items[i]
applied_classification_assignment <=
classification_assignment
classification_assignment.assigned_classification ->
(group)
(group <-
group_relationship.related_group
group_relationship
group_relationship.relating_group ->
group)
group.name = 'reducer']
[product
product.frame_of_reference[i] ->
product_context<=
application_context_element
application_context_element.name = 'plant item']})
#2: (piping_component_class <=
[characterized_object]
[group])

5.1.9.50.1 end_1_connector

AIM element: plant_item_connector

© ISO 2001 – All rights reserved

Source: 227

Reference path: piping_component_definition <=
product_definition
characterized_product_definition = product_definition
characterized_product_definition
characterized_definition = characterized_product_definition
characterized_definition <-
property_definition.definition
property_definition =>
product_definition_shape <-
shape_aspect.of_shape
{shape_aspect
shape_aspect.description = 'end 1'}
shape_aspect =>
plant_item_connector

5.1.9.50.2 end_2_connector

AIM element: plant_item_connector

Source: 227

Reference path: piping_component_definition <=
product_definition
characterized_product_definition = product_definition
characterized_product_definition
characterized_definition = characterized_product_definition
characterized_definition <-
property_definition.definition
property_definition =>
product_definition_shape <-
shape_aspect.of_shape
{shape_aspect
shape_aspect.description = 'end 2'}
shape_aspect =>
plant_item_connector

5.1.9.50.3 end_to_end_length

#1: The attributes are for an individual piping component.

#2: The attributes are for the definition of a family of piping components.

AIM element: [measure_with_unit.value_component]
[measure_with_unit.unit_component]

Source: 41

Rules: subtype_exclusive_characterized_object
subtype_mandatory_shape_representation

Reference path: #1: (piping_component_definition <=

© ISO 2001 – All rights reserved

```
product_definition
characterized_product_definition = product_definition
characterized_product_definition
characterized_definition = characterized_product_definition
characterized_definition <-
property_definition.definition
property_definition =>
product_definition_shape <-
shape_aspect.of_shape
[{[shape_aspect =>
plant_item_connector]
[shape_aspect
shape_aspect.description = 'end 1']}
shape_aspect <-
shape_aspect_relationship.relating_shape_aspect]
[{[shape_aspect =>
plant_item_connector]
[shape_aspect
shape_aspect.description = 'end 2']}
shape_aspect <-
shape_aspect_relationship.related_shape_aspect]
shape_aspect_relationship =>
dimensional_location
dimensional_characteristic = dimensional_location
dimensional_characteristic <-
dimensional_characteristic_representation.dimension
dimensional_characteristic_representation
dimensional_characteristic_representation.representation ->
shape_dimension_representation <=
shape_representation <=
{representation
representation.name = 'reducer fitting dimensional shape'}
representation
representation.items[i] ->
{representation_item
representation_item.name = 'end to end length'})
#2: (piping_component_class <=
characterized_object
characterized_definition = characterized_object
characterized_definition <-
property_definition.definition
property_definition
represented_definition = property_definition
represented_definition <-
property_definition_representation.definition
property_definition_representation
property_definition_representation.used_representation ->
{representation
representation.name = 'reducer fitting class dimensions'}
representation
(representation.items[i] ->
{representation_item
(representation_item.name = 'maximum end to end length')
(representation_item.name = 'minimum end to end length')})
```


© ISO 2001 – All rights reserved

([representation.items[i] ->
{representation_item
representation_item.name = 'maximum end to end length'}]
[representation.items[i] ->
{representation_item
representation_item.name = 'minimum end to end length'}]))
representation_item =>
measure_representation_item <=
{measure_with_unit =>
length_measure_with_unit}
measure_with_unit
[measure_with_unit.value_component]
[measure_with_unit.unit_component]

5.1.9.51 Reducing_flange

AIM element: piping_component_definition

Source: 227

Rules: dependent_instantiable_product_context
product_context_discipline_type_constraint
value_for_application_context

Reference path: piping_component_definition <=
product_definition
{piping_component_definition
classification_item = piping_component_definition
classification_item <-
applied_classification_assignment.items[i]
applied_classification_assignment <=
classification_assignment
classification_assignment.assigned_classification ->
[group =>
flange_fitting_class]
[group
group.name = 'reducing flange']}
{product_definition
product_definition.formation ->
product_definition_formation
product_definition_formation.of_product ->
[product
classification_item = product
classification_item <-
applied_classification_assignment.items[i]
applied_classification_assignment <=
classification_assignment
classification_assignment.assigned_classification ->
(group)
(group <-
group_relationship.related_group
group_relationship
group_relationship.relating_group ->
group)

© ISO 2001 – All rights reserved

group.name = 'flange']
[product
product.frame_of_reference[i] ->
product_context<=
application_context_element
application_context_element.name = 'plant item']}

5.1.9.52 Reinforcing_component

AIM element: product

Source: 41

Rules: dependent_instantiable_product_context
product_context_discipline_type_constraint
value_for_application_context

Reference path: {[product
classification_item = product
classification_item <-
applied_classification_assignment.items[i]
applied_classification_assignment <=
classification_assignment
classification_assignment.assigned_classification ->
[group
group.name = 'reinforcing component']
[group
group_relationship.related_group
group_relationship
{group_relationship.name = 'usage classification'}
group_relationship.relating_group ->
group
group.name = 'support component']]
[product
product.frame_of_reference[i] ->
product_context <=
application_context_element
application_context_element.name = 'plant item']}

5.1.9.52.1 orientation

AIM element: axis2_placement_3d.ref_direction

Source: 42

Reference path: product
product_definition_formation.of_product
product_definition_formation
product_definition.formation
product_definition
characterized_product_definition = product_definition
characterized_product_definition
characterized_definition = characterized_product_definition

© ISO 2001 – All rights reserved

characterized_definition <-
property_definition.definition
property_definition =>
product_definition_shape <-
shape_aspect.of_shape
shape_aspect
represented_definition = shape_aspect
represented_definition <-
property_definition_representation.definition
property_definition_representation
property_definition_representation.used_representation ->
representation
representation.items[i] ->
{representation_item
representation_item.name = 'reinforcing orientation'}
representation_item =>
geometric_representation_item =>
placement =>
axis2_placement_3d
axis2_placement_3d.ref_direction

5.1.9.52.2 location_point

AIM element: placement.location

Source: 42

Reference path:
product
product_definition_formation.of_product
product_definition_formation
product_definition.formation
product_definition
characterized_product_definition = product_definition
characterized_product_definition
characterized_definition = characterized_product_definition
characterized_definition <-
property_definition.definition
property_definition =>
product_definition_shape <-
shape_aspect.of_shape
shape_aspect
represented_definition = shape_aspect
represented_definition <-
property_definition_representation.definition
property_definition_representation
property_definition_representation.used_representation ->
representation
representation.items[i] ->
{representation_item
representation_item.name = 'reinforcing location'}
representation_item =>
geometric_representation_item =>
placement

© ISO 2001 – All rights reserved

placement.location

5.1.9.52.3 end_1_connector

AIM element: plant_item_connector

Source: 227

Reference path: product
product_definition_formation.of_product
product_definition_formation
product_definition.formation
product_definition
characterized_product_definition = product_definition
characterized_product_definition
characterized_definition = characterized_product_definition
characterized_definition <-
property_definition.definition
property_definition =>
product_definition_shape <-
shape_aspect.of_shape
{shape_aspect
shape_aspect.description = 'end 1'}
shape_aspect =>
plant_item_connector

5.1.9.53 Reinforcing_plate

AIM element: reinforcing_component_definition

Source: 227

Rules: dependent_instantiable_product_context
product_context_discipline_type_constraint
value_for_application_context

Reference path: reinforcing_component_definition <=
product_definition
{reinforcing_component_definition
classification_item = reinforcing_component_definition
classification_item <-
applied_classification_assignment.items[i]
applied_classification_assignment <=
classification_assignment
classification_assignment.assigned_classification ->
[group =>
piping_support_fitting_-class]
[group
group.name = 'reinforcing plate']}
{product_definition
product_definition.formation ->
product_definition_formation
product_definition_formation.of_product ->

© ISO 2001 – All rights reserved

[product
classification_item = product
classification_item <-
applied_classification_assignment.items[i]
applied_classification_assignment <=
classification_assignment
classification_assignment.assigned_classification ->
(group)
(group <-
group_relationship.related_group
group_relationship
group_relationship.relating_group ->
group)
group.name = 'reinforcing component']
[product
product.frame_of_reference[i] ->
product_context <=
application_context_element
application_context_element.name = 'plant item']})

5.1.9.53.1 thickness

AIM element: [measure_with_unit.value_component]
[measure_with_unit.unit_component]

Source: 41

Rules: subtype_mandatory_shape_representation

Reference path: reinforcing_component_definition <=
product_definition
characterized_product_definition = product_definition
characterized_product_definition
characterized_definition = characterized_product_definition
characterized_definition <-
property_definition.definition
property_definition =>
product_definition_shape <-
shape_aspect.of_shape
[shape_aspect <-
shape_aspect_relationship.relating_shape_aspect]
[shape_aspect <-
shape_aspect_relationship.related_shape_aspect]
shape_aspect_relationship =>
dimensional_location
dimensional_characteristic = dimensional_location
dimensional_characteristic <-
dimensional_characteristic_representation.dimension
dimensional_characteristic_representation
dimensional_characteristic_representation.representation ->
shape_dimension_representation <=
shape_representation <=
{representation
representation.name = 'reinforcing plate dimensional shape'}

© ISO 2001 – All rights reserved

representation
representation.items[i] ->
representation_item =>
{representation_item.name = 'thickness'}
measure_representation_item <=
{measure_with_unit =>
length_measure_with_unit}
measure_with_unit
[measure_with_unit.value_component]
[measure_with_unit.unit_component]

5.1.9.54 Ring_spacer

#1: The attributes are for an individual piping component.

#2: The attributes are for the definition of a family of piping components.

AIM element: #1: (piping_component_definition)
#2: (piping_component_class)

Source: 227

Rules: dependent_instantiable_product_context
product_context_discipline_type_constraint
value_for_application_context

Reference path: #1: (piping_component_definition <=
product_definition
{piping_component_definition
classification_item = piping_component_definition
classification_item <-
applied_classification_assignment.items[i]
applied_classification_assignment <=
classification_assignment
classification_assignment.assigned_classification ->
[group =>
spacer_fitting_class]
[group
group.name = 'ring spacer']}
{product_definition
product_definition.formation ->
product_definition_formation
product_definition_formation.of_product ->
[product
classification_item = product
classification_item <-
applied_classification_assignment.items[i]
applied_classification_assignment <=
classification_assignment
classification_assignment.assigned_classification ->
(group)
(group <-
group_relationship.related_group

© ISO 2001 – All rights reserved

group_relationship
group_relationship.relating_group ->
group)
group.name = 'spacer']
[product
product.frame_of_reference[i] ->
product_context<=
application_context_element
application_context_element.name = 'plant item']})
#2: (piping_component_class <=
[characterized_object]
[group])

5.1.9.54.1 inside_diameter

#1: The attributes are for an individual piping component.

#2: The attributes are for the definition of a family of piping components.

AIM element: [measure_with_unit.value_component]
[measure_with_unit.unit_component]

Source: 41

Rules: subtype_exclusive_characterized_object
subtype_mandatory_shape_representation

Reference path: #1: (piping_component_definition <=
product_definition
characterized_product_definition = product_definition
characterized_product_definition
characterized_definition = characterized_product_definition
characterized_definition <-
property_definition.definition
property_definition =>
product_definition_shape <-
shape_aspect.of_shape
shape_aspect <-
dimensional_size.applies_to
dimensional_size
dimensional_characteristic = dimensional_size
dimensional_characteristic <-
dimensional_characteristic_representation.dimension
dimensional_characteristic_representation
dimensional_characteristic_representation.representation ->
shape_dimension_representation <=
shape_representation <=
{representation
representation.name = 'spacer fitting dimensional shape'}
representation
representation.items[i] ->
{representation_item
representation_item.name = 'inside diameter'})
#2: (piping_component_class <=

© ISO 2001 – All rights reserved

characterized_object
characterized_definition = characterized_object
characterized_definition <-
property_definition.definition
property_definition
represented_definition = property_definition
represented_definition <-
property_definition_representation.definition
property_definition_representation
property_definition_representation.used_representation ->
{representation
representation.name = 'spacer fitting class dimensions'}
representation
(representation.items[i] ->
{representation_item
(representation_item.name = 'maximum inside diameter')
(representation_item.name = 'minimum inside diameter')})
([representation.items[i] ->
{representation_item
representation_item.name = 'maximum inside diameter'}]
[representation.items[i] ->
{representation_item
representation_item.name = 'minimum inside diameter'}]))
representation_item =>
measure_representation_item <=
{measure_with_unit =>
length_measure_with_unit}
measure_with_unit
[measure_with_unit.value_component]
[measure_with_unit.unit_component]

5.1.9.55 Schedule

#1: The attributes are for an individual piping component.

#2: The attributes are for the definition of a family of piping components.

AIM element: representation

Source: 43

Reference path: {representation
document_item = representation
document_item <-
applied_document_reference.items[i]
applied_document_reference <=
document_reference
document_reference.assigned_document ->
document <-
document_usage_constraint.source
document_usage_constraint
(document_usage_constraint.subject_element = 'pipe schedule')
(document_usage_constraint.subject_element = 'connector schedule')}
#1: ({[representation

© ISO 2001 – All rights reserved

representation.name = 'piping component size']
[representation <-
property_definition_representation.used_representation
property_definition_representation
property_definition_representation.definition ->
(represented_definition
represented_definition = property_definition
property_definition
property_definition.definition ->
characterized_definition
characterized_definition = characterized_product_definition
characterized_product_definition
characterized_product_definition = product_definition
product_definition =>
piping_component_definition)
(represented_definition
represented_definition = shape_aspect
shape_aspect =>
plant_item_connector)]})
#2: ({[representation
representation.name = 'piping component class size']
[representation <-
property_definition_representation.used_representation
property_definition_representation
property_definition_representation.definition ->
represented_definition
represented_definition = property_definition
property_definition
property_definition.definition ->
characterized_definition
characterized_definition = characterized_object
characterized_object =>
piping_component_class]})

5.1.9.55.1 nominal_size

#1: The attributes are for an individual piping component.

#2: The attributes are for the definition of a family of piping components.

AIM element: [measure_with_unit.value_component]
[measure_with_unit.unit_component]

Source: 41

Reference path: representation
#1: ({representation
representation.name = 'piping component size'}
representation.items[i] ->
{representation_item
representation_item.name = 'nominal size'})
#2: ({representation

© ISO 2001 – All rights reserved

representation.name = 'piping component class size'}
(representation.items[i] ->
{representation_item
(representation_item.name = 'maximum nominal size')
(representation_item.name = 'minimum nominal size')})
([representation.items[i] ->
{representation_item
representation_item.name = 'maximum nominal size'}]
[representation.items[i] ->
{representation_item
representation_item.name = 'minimum nominal size'}])
representation_item =>
measure_representation_item <=
measure_with_unit
[measure_with_unit.value_component]
[measure_with_unit.unit_component]

5.1.9.55.2 pipe_schedule

AIM element: document_usage_constraint.subject_element_value

Source: 41

Reference path: representation
document_item = representation
document_item <-
applied_document_reference.items[i]
applied_document_reference <=
document_reference
document_reference.assigned_document ->
document <-
document_usage_constraint.source
document_usage_constraint
document_usage_constraint.subject_element_value

5.1.9.56 Shoe

AIM element: piping_support_definition

Source: 227

Rules: dependent_instantiable_product_context
product_context_discipline_type_constraint
value_for_application_context

Reference path: piping_support_definition <=
product_definition
{piping_support_definition
classification_item = piping_support_definition
classification_item <-
applied_classification_assignment.items[i]
applied_classification_assignment <=
classification_assignment

© ISO 2001 – All rights reserved

classification_assignment.assigned_classification ->
[group =>
piping_support_fitting_-class]
[group
group.name = 'shoe']}
{product_definition
product_definition.formation ->
product_definition_formation
product_definition_formation.of_product ->
[product
classification_item = product
classification_item <-
applied_classification_assignment.items[i]
applied_classification_assignment <=
classification_assignment
classification_assignment.assigned_classification ->
(group)
(group <-
group_relationship.related_group
group_relationship
group_relationship.relating_group ->
group)
group.name = 'piping support']
[product
product.frame_of_reference[i] ->
product_context <=
application_context_element
application_context_element.name = 'plant item']})

5.1.9.56.1 length

AIM element: [measure_with_unit.value_component]
[measure_with_unit.unit_component]

Source: 41

Rules: subtype_mandatory_shape_representation

Reference path: piping_support_definition <=
product_definition
characterized_product_definition = product_definition
characterized_product_definition
characterized_definition = characterized_product_definition
characterized_definition <-
property_definition.definition
property_definition =>
product_definition_shape <-
shape_aspect.of_shape
[shape_aspect <-
shape_aspect_relationship.relating_shape_aspect]
[shape_aspect <-
shape_aspect_relationship.related_shape_aspect]
shape_aspect_relationship =>
dimensional_location

© ISO 2001 – All rights reserved

dimensional_characteristic = dimensional_location
dimensional_characteristic <-
dimensional_characteristic_representation.dimension
dimensional_characteristic_representation
dimensional_characteristic_representation.representation ->
shape_dimension_representation <=
shape_representation <=
{representation
representation.name = 'shoe dimensional shape'}
representation
representation.items[i] ->
representation_item =>
{representation_item.name = 'length'}
measure_representation_item <=
{measure_with_unit =>
length_measure_with_unit}
measure_with_unit
[measure_with_unit.value_component]
[measure_with_unit.unit_component]

5.1.9.57 Slip_on_flange

#1: The attributes are for an individual piping component.

#2: The attributes are for the definition of a family of piping components.

AIM element: #1: (piping_component_definition)
#2: (piping_component_class)

Source: 227

Rules: dependent_instantiable_product_context
product_context_discipline_type_constraint
value_for_application_context

Reference path: #1: (piping_component_definition <=
product_definition
{piping_component_definition
classification_item = piping_component_definition
classification_item <-
applied_classification_assignment.items[i]
applied_classification_assignment <=
classification_assignment
classification_assignment.assigned_classification ->
[group =>
flange_fitting_neck_type_class]
[group
group.name = 'slip on flange']}
{product_definition
product_definition.formation ->
product_definition_formation
product_definition_formation.of_product ->
[product
classification_item = product

© ISO 2001 – All rights reserved

classification_item <-
applied_classification_assignment.items[i]
applied_classification_assignment <=
classification_assignment
classification_assignment.assigned_classification ->
(group)
(group <-
group_relationship.related_group
group_relationship
group_relationship.relating_group ->
group)
group.name = 'flange']
[product
product.frame_of_reference[i] ->
product_context<=
application_context_element
application_context_element.name = 'plant item']})
#2: (piping_component_class <=
[characterized_object]
[group])

5.1.9.57.1 stand_off

#1: The attributes are for an individual piping component.

#2: The attributes are for the definition of a family of piping components.

AIM element: [measure_with_unit.value_component]
[measure_with_unit.unit_component]

Source: 41

Rules: subtype_exclusive_characterized_object
subtype_mandatory_shape_representation

Reference path: #1: (piping_component_definition <=
product_definition
characterized_product_definition = product_definition
characterized_product_definition
characterized_definition = characterized_product_definition
characterized_definition <-
property_definition.definition
property_definition =>
product_definition_shape <-
shape_aspect.of_shape
[{shape_aspect
shape_aspect.name = 'flange face'}
shape_aspect <-
shape_aspect_relationship.relating_shape_aspect]
[{shape_aspect
shape_aspect.name = 'pipe end'}
shape_aspect <-
shape_aspect_relationship.related_shape_aspect]
shape_aspect_relationship =>

© ISO 2001 – All rights reserved

dimensional_location
dimensional_characteristic = dimensional_location
dimensional_characteristic <-
dimensional_characteristic_representation.dimension
dimensional_characteristic_representation
dimensional_characteristic_representation.representation ->
shape_dimension_representation <=
shape_representation <=
{representation
representation.name = 'slip on flange fitting dimensional shape'}
representation
representation.items[i] ->
{representation_item
representation_item.name = 'stand off'})
#2: (piping_component_class <=
characterized_object
characterized_definition = characterized_object
characterized_definition <-
property_definition.definition
property_definition
represented_definition = property_definition
represented_definition <-
property_definition_representation.definition
property_definition_representation
property_definition_representation.used_representation ->
{representation
representation.name = 'slip on flange fitting class dimensions'}
representation
(representation.items[i] ->
{representation_item
(representation_item.name = 'maximum stand off')
(representation_item.name = 'minimum stand off')})
([representation.items[i] ->
{representation_item
representation_item.name = 'maximum stand off'}]
[representation.items[i] ->
{representation_item
representation_item.name = 'minimum stand off'}]))
representation_item =>
measure_representation_item <=
{measure_with_unit =>
length_measure_with_unit}
measure_with_unit
[measure_with_unit.value_component]
[measure_with_unit.unit_component]

5.1.9.58 Slip_on_jacket_flange

#1: The attributes are for an individual piping component.

#2: The attributes are for the definition of a family of piping components.

AIM element: #1: (piping_component_definition)

© ISO 2001 – All rights reserved

#2: (piping_component_class)

Source: 227

Rules: dependent_instantiable_product_context
product_context_discipline_type_constraint
value_for_application_context

Reference path: #1: (piping_component_definition <=
product_definition
{piping_component_definition
classification_item = piping_component_definition
classification_item <-
applied_classification_assignment.items[i]
applied_classification_assignment <=
classification_assignment
classification_assignment.assigned_classification ->
[group =>
flange_fitting_neck_type_class]
[group
group.name = 'slip on jacket flange']
[group <-
group_relationship.related_group
{group_relationship
group_relationship.name = 'class hierarchy'}
group_relationship
group_relationship.relating_group ->
group
group.name = 'slip on flange']}
{product_definition
product_definition.formation ->
product_definition_formation
product_definition_formation.of_product ->
[product
classification_item = product
classification_item <-
applied_classification_assignment.items[i]
applied_classification_assignment <=
{classification_assignment
classification_assignment.role ->
group_role
group_role.name = 'plant item type'}
classification_assignment
classification_assignment.assigned_classification ->
(group)
(group <-
group_relationship.related_group
group_relationship
group_relationship.relating_group ->
group)
group.name = 'slip on jacket flange']
[product
product.frame_of_reference[i] ->
product_context<=

© ISO 2001 – All rights reserved

application_context_element
application_context_element.name = 'plant item']})
#2: (piping_component_class <=
[characterized_object]
[group])
{[group =>
flange_fitting_neck_type_class]
[group
group.name = 'slip on jacket flange']
(group)
(group <-
group_relationship.related_group
group_relationship
group_relationship.relating_group ->
group)
group.name = 'slip on jacket flange'}

5.1.9.58.1 end_3_connector

AIM element: plant_item_connector

Source: 227

Reference path: piping_component_definition <=
product_definition
characterized_product_definition = product_definition
characterized_product_definition
characterized_definition = characterized_product_definition
characterized_definition <-
property_definition.definition
property_definition =>
product_definition_shape <-
shape_aspect.of_shape
{shape_aspect
shape_aspect.description = 'end 1'}
shape_aspect =>
plant_item_connector

5.1.9.59 Socket_weld_flange

AIM element: piping_component_definition

Source: 227

Rules: dependent_instantiable_product_context
product_context_discipline_type_constraint
value_for_application_context

Reference path: piping_component_definition <=
product_definition
{piping_component_definition
classification_item = piping_component_definition
classification_item <-

© ISO 2001 – All rights reserved

applied_classification_assignment.items[i]
applied_classification_assignment <=
classification_assignment
classification_assignment.assigned_classification ->
[group =>
flange_fitting_neck_type_class]
[group
group.name = 'socket weld flange']}
{product_definition
product_definition.formation ->
product_definition_formation
product_definition_formation.of_product ->
[product
classification_item = product
classification_item <-
applied_classification_assignment.items[i]
applied_classification_assignment <=
classification_assignment
classification_assignment.assigned_classification ->
(group)
(group <-
group_relationship.related_group
group_relationship
group_relationship.relating_group ->
group)
group.name = 'flange']
[product
product.frame_of_reference[i] ->
product_context<=
application_context_element
application_context_element.name = 'plant item']}

5.1.9.60 Spacer

#1: The attributes are for an individual piping component.

#2: The attributes are for the definition of a family of piping components.

AIM element: #1: (piping_component_definition)
#2: (piping_component_class)

Source: 227

Rules: dependent_instantiable_product_context
product_context_discipline_type_constraint
value_for_application_context

Reference path: #1: (piping_component_definition <=
product_definition
{product_definition
product_definition.formation ->
product_definition_formation
product_definition_formation.of_product ->
[product

© ISO 2001 – All rights reserved

classification_item = product
classification_item <-
applied_classification_assignment.items[i]
applied_classification_assignment <=
classification_assignment
classification_assignment.assigned_classification ->
(group)
(group <-
group_relationship.related_group
group_relationship
group_relationship.relating_group ->
group)
group.name = 'spacer']
[product
product.frame_of_reference[i] ->
product_context<=
application_context_element
application_context_element.name = 'plant item']})
#2: (piping_component_class <=
[characterized_object]
[group])

5.1.9.60.1 outside_diameter

#1: The attributes are for an individual piping component.

#2: The attributes are for the definition of a family of piping components.

AIM element: [measure_with_unit.value_component]
[measure_with_unit.unit_component]

Source: 41

Rules: subtype_exclusive_characterized_object
subtype_mandatory_shape_representation

Reference path: #1: (piping_component_definition <=
product_definition
characterized_product_definition = product_definition
characterized_product_definition
characterized_definition = characterized_product_definition
characterized_definition <-
property_definition.definition
property_definition =>
product_definition_shape <-
shape_aspect.of_shape
shape_aspect <-
dimensional_size.applies_to
dimensional_size
dimensional_characteristic = dimensional_size
dimensional_characteristic <-
dimensional_characteristic_representation.dimension
dimensional_characteristic_representation
dimensional_characteristic_representation.representation ->

© ISO 2001 – All rights reserved

shape_dimension_representation <=
shape_representation <=
{representation
representation.name = 'spacer fitting dimensional shape'}
representation
representation.items[i] ->
{representation_item
representation_item.name = 'outside diameter'})
#2: (piping_component_class <=
characterized_object
characterized_definition = characterized_object
characterized_definition <-
property_definition.definition
property_definition
represented_definition = property_definition
represented_definition <-
property_definition_representation.definition
property_definition_representation
property_definition_representation.used_representation ->
{representation
representation.name = 'spacer fitting class dimensions'}
representation
(representation.items[i] ->
{representation_item
(representation_item.name = 'maximum outside diameter')
(representation_item.name = 'minimum outside diameter')})
([representation.items[i] ->
{representation_item
representation_item.name = 'maximum outside diameter'}]
[representation.items[i] ->
{representation_item
representation_item.name = 'minimum outside diameter'}]))
representation_item =>
measure_representation_item <=
{measure_with_unit =>
length_measure_with_unit}
measure_with_unit
[measure_with_unit.value_component]
[measure_with_unit.unit_component]

5.1.9.60.2 thickness

#1: The attributes are for an individual piping component.

#2: The attributes are for the definition of a family of piping components.

AIM element: [measure_with_unit.value_component]
[measure_with_unit.unit_component]

Source: 41

Rules: subtype_exclusive_characterized_object
subtype_mandatory_shape_representation

© ISO 2001 – All rights reserved

Reference path: #1: (piping_component_definition <=
product_definition
characterized_product_definition = product_definition
characterized_product_definition
characterized_definition = characterized_product_definition
characterized_definition <-
property_definition.definition
property_definition =>
product_definition_shape <-
shape_aspect.of_shape
[shape_aspect <-
shape_aspect_relationship.relating_shape_aspect]
[shape_aspect <-
shape_aspect_relationship.related_shape_aspect]
shape_aspect_relationship =>
dimensional_location
dimensional_characteristic = dimensional_location
dimensional_characteristic <-
dimensional_characteristic_representation.dimension
dimensional_characteristic_representation
dimensional_characteristic_representation.representation ->
shape_dimension_representation <=
shape_representation <=
{representation
representation.name = 'spacer fitting dimensional shape'}
representation
representation.items[i] ->
{representation_item
representation_item.name = 'thickness'})
#2: (piping_component_class <=
characterized_object
characterized_definition = characterized_object
characterized_definition <-
property_definition.definition
property_definition
represented_definition = property_definition
represented_definition <-
property_definition_representation.definition
property_definition_representation
property_definition_representation.used_representation ->
{representation
representation.name = 'spacer fitting class dimensions'}
representation
(representation.items[i] ->
{representation_item
(representation_item.name = 'maximum thickness')
(representation_item.name = 'minimum thickness')})
([representation.items[i] ->
{representation_item
representation_item.name = 'maximum thickness'}]
[representation.items[i] ->
{representation_item
representation_item.name = 'minimum thickness'}]))
representation_item =>

© ISO 2001 – All rights reserved

measure_representation_item <=
{measure_with_unit =>
length_measure_with_unit}
measure_with_unit
[measure_with_unit.value_component]
[measure_with_unit.unit_component]

5.1.9.61 Specialty_item

AIM element: piping_component_definition

Source: 227

Rules: dependent_instantiable_product_context
product_context_discipline_type_constraint
value_for_application_context

Reference path: piping_component_definition <=
product_definition
{product_definition
product_definition.formation ->
product_definition_formation
product_definition_formation.of_product ->
product
product.frame_of_reference[i] ->
product_context<=
application_context_element
application_context_element.name = 'plant item'}

5.1.9.61.1 type

AIM element: group.name

Source: 41

Reference path: piping_component_definition
classification_item = piping_component_definition
classification_item <-
applied_classification_assignment.items[i]
applied_classification_assignment <=
{classification_assignment
classification_assignment.role ->
classification_role
classification_role.name = 'specialty item type classification'}
classification_assignment
classification_assignment.assigned_classification ->
{group =>
specialty_item_class}
group
group.name

© ISO 2001 – All rights reserved

5.1.9.62 Spectacle_blind

#1: The attributes are for an individual piping component.

#2: The attributes are for the definition of a family of piping components.

AIM element: #1: (piping_component_definition)
#2: (piping_component_class)

Source: 227

Rules: dependent_instantiable_product_context
product_context_discipline_type_constraint
value_for_application_context

Reference path: #1: (piping_component_definition <=
product_definition
{piping_component_definition
classification_item = piping_component_definition
classification_item <-
applied_classification_assignment.items[i]
applied_classification_assignment <=
classification_assignment
classification_assignment.assigned_classification ->
[group =>
blank_fitting_class]
[group
group.name = 'spectacle blind']}
{product_definition
product_definition.formation ->
product_definition_formation
product_definition_formation.of_product ->
[product
classification_item = product
classification_item <-
applied_classification_assignment.items[i]
applied_classification_assignment <=
classification_assignment
classification_assignment.assigned_classification ->
(group)
(group <-
group_relationship.related_group
group_relationship
group_relationship.relating_group ->
group)
group.name = 'blank']
[product
product.frame_of_reference[i] ->
product_context<=
application_context_element
application_context_element.name = 'plant item']})
#2: (piping_component_class <=
[characterized_object]

© ISO 2001 – All rights reserved

[group])

5.1.9.62.1 arm_width

#1: The attributes are for an individual piping component.

#2: The attributes are for the definition of a family of piping components.

AIM element: [measure_with_unit.value_component]
[measure_with_unit.unit_component]

Source: 41

Rules: subtype_exclusive_characterized_object
subtype_mandatory_shape_representation

Reference path: #1: (piping_component_definition <=
product_definition
characterized_product_definition = product_definition
characterized_product_definition
characterized_definition = characterized_product_definition
characterized_definition <-
property_definition.definition
property_definition =>
product_definition_shape <-
shape_aspect.of_shape
[shape_aspect <-
shape_aspect_relationship.relating_shape_aspect]
[shape_aspect <-
shape_aspect_relationship.related_shape_aspect]
shape_aspect_relationship =>
dimensional_location
dimensional_characteristic = dimensional_location
dimensional_characteristic <-
dimensional_characteristic_representation.dimension
dimensional_characteristic_representation
dimensional_characteristic_representation.representation ->
shape_dimension_representation <=
shape_representation <=
{representation
representation.name = 'blank fitting dimensional shape'}
representation
representation.items[i] ->
{representation_item
representation_item.name = 'arm width'})
#2: (piping_component_class <=
characterized_object
characterized_definition = characterized_object
characterized_definition <-
property_definition.definition
property_definition
represented_definition = property_definition
represented_definition <-
property_definition_representation.definition

© ISO 2001 – All rights reserved

property_definition_representation
property_definition_representation.used_representation ->
{representation
representation.name = 'blank fitting class dimensions'}
representation
(representation.items[i] ->
{representation_item
(representation_item.name = 'maximum arm width')
(representation_item.name = 'minimum arm width')})
([representation.items[i] ->
{representation_item
representation_item.name = 'maximum arm width'}]
[representation.items[i] ->
{representation_item
representation_item.name = 'minimum arm width'}]))
representation_item =>
measure_representation_item <=
{measure_with_unit =>
length_measure_with_unit}
measure_with_unit
[measure_with_unit.value_component]
[measure_with_unit.unit_component]

5.1.9.62.2 centre_to_centre

#1: The attributes are for an individual piping component.

#2: The attributes are for the definition of a family of piping components.

AIM element: [measure_with_unit.value_component]
[measure_with_unit.unit_component]

Source: 41

Rules: subtype_exclusive_characterized_object
subtype_mandatory_shape_representation

Reference path: #1: (piping_component_definition <=
product_definition
characterized_product_definition = product_definition
characterized_product_definition
characterized_definition = characterized_product_definition
characterized_definition <-
property_definition.definition
property_definition =>
product_definition_shape <-
[shape_aspect.of_shape
{shape_aspect
shape_aspect.description = 'centre'}
shape_aspect <-
shape_aspect_relationship.relating_shape_aspect]
[shape_aspect.of_shape
{shape_aspect
shape_aspect.description = 'centre'}

© ISO 2001 – All rights reserved

```
shape_aspect <-
shape_aspect_relationship.related_shape_aspect]
shape_aspect_relationship =>
dimensional_location
dimensional_characteristic = dimensional_location
dimensional_characteristic <-
dimensional_characteristic_representation.dimension
dimensional_characteristic_representation
dimensional_characteristic_representation.representation ->
shape_dimension_representation <=
shape_representation <=
{representation
representation.name = 'blank fitting dimensional shape'}
representation
representation.items[i] ->
{representation_item
representation_item.name = 'centre to centre'})
#2: (piping_component_class <=
characterized_object
characterized_definition = characterized_object
characterized_definition <-
property_definition.definition
property_definition
represented_definition = property_definition
represented_definition <-
property_definition_representation.definition
property_definition_representation
property_definition_representation.used_representation ->
{representation
representation.name = 'blank fitting class dimensions'}
representation
(representation.items[i] ->
{representation_item
(representation_item.name = 'maximum centre to centre')
(representation_item.name = 'minimum centre to centre')})
([representation.items[i] ->
{representation_item
representation_item.name = 'maximum centre to centre'}]
[representation.items[i] ->
{representation_item
representation_item.name = 'minimum centre to centre'}]))
representation_item =>
measure_representation_item <=
{measure_with_unit =>
length_measure_with_unit}
measure_with_unit
[measure_with_unit.value_component]
[measure_with_unit.unit_component]
```

5.1.9.62.3 inside_ring_diameter

#1: The attributes are for an individual piping component.

© ISO 2001 – All rights reserved

#2: The attributes are for the definition of a family of piping components.

AIM element: [measure_with_unit.value_component]
[measure_with_unit.unit_component]

Source: 41

Rules: subtype_exclusive_characterized_object
subtype_mandatory_shape_representation

Reference path: #1: (piping_component_definition <=
product_definition
characterized_product_definition = product_definition
characterized_product_definition
characterized_definition = characterized_product_definition
characterized_definition <-
property_definition.definition
property_definition =>
product_definition_shape <-
shape_aspect.of_shape
shape_aspect <-
dimensional_size.applies_to
dimensional_size
dimensional_characteristic = dimensional_size
dimensional_characteristic <-
dimensional_characteristic_representation.dimension
dimensional_characteristic_representation
dimensional_characteristic_representation.representation ->
shape_dimension_representation <=
shape_representation <=
{representation
representation.name = 'blank fitting dimensional shape'}
representation
representation.items[i] ->
{representation_item
representation_item.name = 'inside ring diameter'})
#2: (piping_component_class <=
characterized_object
characterized_definition = characterized_object
characterized_definition <-
property_definition.definition
property_definition
represented_definition = property_definition
represented_definition <-
property_definition_representation.definition
property_definition_representation
property_definition_representation.used_representation ->
{representation
representation.name = 'blank fitting class dimensions'}
representation
(representation.items[i] ->
{representation_item
(representation_item.name = 'maximum inside ring diameter')
(representation_item.name = 'minimum inside ring diameter')})

© ISO 2001 – All rights reserved

([representation.items[i] ->
{representation_item
representation_item.name = 'maximum inside ring diameter'}]
[representation.items[i] ->
{representation_item
representation_item.name = 'minimum inside ring diameter'}]))
representation_item =>
measure_representation_item <=
{measure_with_unit =>
length_measure_with_unit}
measure_with_unit
[measure_with_unit.value_component]
[measure_with_unit.unit_component]

5.1.9.63 Stay

AIM element: reinforcing_component_definition

Source: 227

Rules: dependent_instantiable_product_context
product_context_discipline_type_constraint
value_for_application_context

Reference path: reinforcing_component_definition <=
product_definition
{reinforcing_component_definition
classification_item = reinforcing_component_definition
classification_item <-
applied_classification_assignment.items[i]
applied_classification_assignment <=
classification_assignment
classification_assignment.assigned_classification ->
[group =>
piping_support_fitting_-class]
[group
group.name = 'stay']}
{product_definition
product_definition.formation ->
product_definition_formation
product_definition_formation.of_product ->
[product
classification_item = product
classification_item <-
applied_classification_assignment.items[i]
applied_classification_assignment <=
classification_assignment
classification_assignment.assigned_classification ->
(group)
(group <-
group_relationship.related_group
group_relationship
group_relationship.relating_group ->
group)

© ISO 2001 – All rights reserved

group.name = 'reinforcing component']
[product
product.frame_of_reference[i] ->
product_context <=
application_context_element
application_context_element.name = 'plant item']})

5.1.9.63.1 height

AIM element: [measure_with_unit.value_component]
[measure_with_unit.unit_component]

Source: 41

Rules: subtype_mandatory_shape_representation

Reference path: reinforcing_component_definition <=
product_definition
characterized_product_definition = product_definition
characterized_product_definition
characterized_definition = characterized_product_definition
characterized_definition <-
property_definition.definition
property_definition =>
product_definition_shape <-
shape_aspect.of_shape
[shape_aspect <-
shape_aspect_relationship.relating_shape_aspect]
[shape_aspect <-
shape_aspect_relationship.related_shape_aspect]
shape_aspect_relationship =>
dimensional_location
dimensional_characteristic = dimensional_location
dimensional_characteristic <-
dimensional_characteristic_representation.dimension
dimensional_characteristic_representation
dimensional_characteristic_representation.representation ->
shape_dimension_representation <=
shape_representation <=
{representation
representation.name = 'stay dimensional shape'}
representation
representation.items[i] ->
representation_item =>
{representation_item.name = 'height'}
measure_representation_item <=
{measure_with_unit =>
length_measure_with_unit}
measure_with_unit
[measure_with_unit.value_component]
[measure_with_unit.unit_component]

© ISO 2001 – All rights reserved

5.1.9.64 Stopper

AIM element: piping_support_definition

Source: 227

Rules: dependent_instantiable_product_context
product_context_discipline_type_constraint
value_for_application_context

Reference path: piping_support_definition <=
product_definition
{piping_support_definition
classification_item = piping_support_definition
classification_item <-
applied_classification_assignment.items[i]
applied_classification_assignment <=
classification_assignment
classification_assignment.assigned_classification ->
[group =>
piping_support_fitting_-class]
[group
group.name = 'trunnion']}
{product_definition
product_definition.formation ->
product_definition_formation
product_definition_formation.of_product ->
[product
classification_item = product
classification_item <-
applied_classification_assignment.items[i]
applied_classification_assignment <=
classification_assignment
classification_assignment.assigned_classification ->
(group)
(group <-
group_relationship.related_group
group_relationship
group_relationship.relating_group ->
group)
group.name = 'piping support']
[product
product.frame_of_reference[i] ->
product_context <=
application_context_element
application_context_element.name = 'plant item']})

5.1.9.64.1 length

AIM element: [measure_with_unit.value_component]
[measure_with_unit.unit_component]

Source: 41

© ISO 2001 – All rights reserved

Rules: subtype_mandatory_shape_representation

Reference path: piping_support_definition <=
product_definition
characterized_product_definition = product_definition
characterized_product_definition
characterized_definition = characterized_product_definition
characterized_definition <-
property_definition.definition
property_definition =>
product_definition_shape <-
shape_aspect.of_shape
[shape_aspect <-
shape_aspect_relationship.relating_shape_aspect]
[shape_aspect <-
shape_aspect_relationship.related_shape_aspect]
shape_aspect_relationship =>
dimensional_location
dimensional_characteristic = dimensional_location
dimensional_characteristic <-
dimensional_characteristic_representation.dimension
dimensional_characteristic_representation
dimensional_characteristic_representation.representation ->
shape_dimension_representation <=
shape_representation <=
{representation
representation.name = 'stopper dimensional shape'}
representation
representation.items[i] ->
representation_item =>
{representation_item.name = 'length'}
measure_representation_item <=
{measure_with_unit =>
length_measure_with_unit}
measure_with_unit
[measure_with_unit.value_component]
[measure_with_unit.unit_component]

5.1.9.65 Straight_pipe

#1: The attributes are for an individual piping component.

#2: The attributes are for the definition of a family of piping components.

AIM element: #1: (piping_component_definition)
#2: (piping_component_class)

Source: 227

Rules: dependent_instantiable_product_context
product_context_discipline_type_constraint
value_for_application_context

© ISO 2001 – All rights reserved

Reference path: #1: (piping_component_definition <=
product_definition
{piping_component_definition
classification_item = piping_component_definition
classification_item <-
applied_classification_assignment.items[i]
applied_classification_assignment <=
classification_assignment
classification_assignment.assigned_classification ->
[group =>
pipe_class]
[group
group.name = 'straight pipe']}
{product_definition
product_definition.formation ->
product_definition_formation
product_definition_formation.of_product ->
[product
classification_item = product
classification_item <-
applied_classification_assignment.items[i]
applied_classification_assignment <=
classification_assignment
classification_assignment.assigned_classification ->
(group)
(group <-
group_relationship.related_group
group_relationship
group_relationship.relating_group ->
group)
group.name = 'pipe']
[product
product.frame_of_reference[i] ->
product_context<=
application_context_element
application_context_element.name = 'plant item']})
#2: (piping_component_class <=
[characterized_object]
[group])

5.1.9.65.1 end_to_end_length

#1: The attributes are for an individual piping component.

#1a: The length is given as a numeric value.

#1b: The length is as required.

#2: The attributes are for the definition of a family of piping components.

AIM element: #1a: ([measure_with_unit.value_component]
[measure_with_unit.unit_component])

© ISO 2001 – All rights reserved

#1b: (descriptive_representation_item.description)

#2: ([measure_with_unit.value_component]
[measure_with_unit.unit_component])

Source: 41, 45

Rules: subtype_exclusive_characterized_object
subtype_mandatory_shape_representation

Reference path: #1: (piping_component_definition <=
product_definition
characterized_product_definition = product_definition
characterized_product_definition
characterized_definition = characterized_product_definition
characterized_definition <-
property_definition.definition
property_definition =>
product_definition_shape <-
shape_aspect.of_shape
[{[shape_aspect =>
plant_item_connector]
[shape_aspect
shape_aspect.description = 'end 1']}
shape_aspect <-
shape_aspect_relationship.relating_shape_aspect]
[{[shape_aspect =>
plant_item_connector]
[shape_aspect
shape_aspect.description = 'end 2']}
shape_aspect <-
shape_aspect_relationship.related_shape_aspect]
#1a: (shape_aspect_relationship =>
dimensional_location
dimensional_characteristic = dimensional_location
dimensional_characteristic <-
dimensional_characteristic_representation.dimension
dimensional_characteristic_representation
dimensional_characteristic_representation.representation ->
shape_dimension_representation <=
shape_representation <=
{representation
representation.name = 'pipe dimensional shape'}
representation
representation.items[i] ->
{representation_item
representation_item.name = 'end to end length'}
representation_item =>
measure_representation_item <=
{measure_with_unit =>
length_measure_with_unit}
measure_with_unit

© ISO 2001 – All rights reserved

```
[measure_with_unit.value_component]
[measure_with_unit.unit_component])
#1b: (shape_aspect_relationship
shape_definition = shape_aspect_relationship
shape_definition
characterized_definition = shape_definition
characterized_definition <-
property_definition.definition
property_definition
represented_definition = property_definition
represented_definition <-
property_definition_representation.definition
property_definition_representation
property_definition_representation.used_representation ->
representation
representation.items[i] ->
{representation_item
representation_item.name = 'end to end length'}
representation_item =>
descriptive_representation_item
descriptive_representation_item.description
{descriptive_representation_item.description = 'as required'}))
#2: (piping_component_class <=
characterized_object
characterized_definition = characterized_object
characterized_definition <-
property_definition.definition
property_definition
represented_definition = property_definition
represented_definition <-
property_definition_representation.definition
property_definition_representation
property_definition_representation.used_representation ->
{representation
representation.name = 'pipe class dimensions'}
representation
(representation.items[i] ->
{representation_item
(representation_item.name = 'maximum end to end length')
(representation_item.name = 'minimum end to end length')})
([representation.items[i] ->
{representation_item
representation_item.name = 'maximum end to end length'}]
[representation.items[i] ->
{representation_item
representation_item.name = 'minimum end to end length'}]))
representation_item =>
measure_representation_item <=
{measure_with_unit =>
length_measure_with_unit}
measure_with_unit
[measure_with_unit.value_component]
[measure_with_unit.unit_component])
```


© ISO 2001 – All rights reserved

5.1.9.65.2 end_to_end_cut_length

#1: The end_to_end_cut_length is a single value.

#2: The end_to_end_cut_length is a range of values.

AIM element: [measure_with_unit.value_component]
[measure_with_unit.unit_component]

Source: 41

Reference path: #1:(piping_component_definition <=
product_definition
characterized_product_definition = product_definition
characterized_product_definition
characterized_definition = characterized_product_definition
characterized_definition <-
property_definition.definition
{property_definition =>
product_definition_shape}
property_definition
represented_definition = property_definition
represented_definition <-
property_definition_representation.definition
{property_definition_representation =>
shape_definition_representation}
property_definition_representation
property_definition_representation.used_representation ->
{representation
representation.name = 'pipe fabrication dimensional shape'}
representation
representation.items[i] ->
{representation_item
representation_item.name = 'end to end cut length'}
representation_item =>
measure_representation_item <=
{measure_with_unit =>
length_measure_with_unit}
measure_with_unit
[measure_with_unit.value_component]
[measure_with_unit.unit_component])
#2: (piping_component_definition <=
product_definition
characterized_product_definition = product_definition
characterized_product_definition
characterized_definition = characterized_product_definition
characterized_definition <-
property_definition.definition
property_definition
represented_definition = property_definition
represented_definition <-
property_definition_representation.definition
property_definition_representation
property_definition_representation.used_representation ->

© ISO 2001 – All rights reserved

{representation
representation.name = 'pipe fabrication dimensions'}
representation
(representation.items[i] ->
{representation_item
(representation_item.name = 'maximum end to end length')
(representation_item.name = 'minimum end to end length')})
([representation.items[i] ->
{representation_item
representation_item.name = 'maximum end to end length'}]
[representation.items[i] ->
{representation_item
representation_item.name = 'minimum end to end length'}]))
representation_item =>
measure_representation_item <=
{measure_with_unit =>
length_measure_with_unit}
measure_with_unit
[measure_with_unit.value_component]
[measure_with_unit.unit_component])

5.1.9.66 Swept_bend_pipe

AIM element: piping_component_definition

Source: 227

Rules: dependent_instantiable_product_context
product_context_discipline_type_constraint
value_for_application_context

Reference path: piping_component_definition <=
product_definition
{piping_component_definition
classification_item = piping_component_definition
classification_item <-
applied_classification_assignment.items[i]
applied_classification_assignment <=
classification_assignment
classification_assignment.assigned_classification ->
[group =>
pipe_class]
[group
group.name = 'swept bend pipe']}
{product_definition
product_definition.formation ->
product_definition_formation
product_definition_formation.of_product ->
[product
classification_item = product
classification_item <-
applied_classification_assignment.items[i]
applied_classification_assignment <=
classification_assignment

© ISO 2001 – All rights reserved

classification_assignment.assigned_classification ->
(group)
(group <-
group_relationship.related_group
group_relationship
group_relationship.relating_group ->
group)
group.name = 'pipe']
[product
product.frame_of_reference[i] ->
product_context<=
application_context_element
application_context_element.name = 'plant item']}

5.1.9.66.1 wall_thinning_allowance

AIM element: [measure_with_unit.value_component]
[measure_with_unit.unit_component]

Source: 41

Rules: subtype_mandatory_shape_representation

Reference path: piping_component_definition <=
product_definition
characterized_product_definition = product_definition
characterized_product_definition
characterized_definition = characterized_product_definition
characterized_definition <-
property_definition.definition
property_definition =>
product_definition_shape <-
shape_aspect.of_shape
[shape_aspect <-
shape_aspect_relationship.relating_shape_aspect]
[shape_aspect <-
shape_aspect_relationship.related_shape_aspect]
shape_aspect_relationship =>
dimensional_location
dimensional_characteristic = dimensional_location
dimensional_characteristic <-
dimensional_characteristic_representation.dimension
dimensional_characteristic_representation
dimensional_characteristic_representation.representation ->
shape_dimension_representation <=
shape_representation <=
{representation
representation.name = 'swept bend pipe dimensional shape'}
representation
representation.items[i] ->
{representation_item
representation_item.name = 'wall thinning allowance'}
representation_item =>
measure_representation_item <=

© ISO 2001 – All rights reserved

{measure_with_unit =>
length_measure_with_unit}
measure_with_unit
[measure_with_unit.value_component]
[measure_with_unit.unit_component]

5.1.9.66.2 centreline_radius

AIM element: [measure_with_unit.value_component]
[measure_with_unit.unit_component]

Source: 41

Reference path: piping_component_definition <=
product_definition
characterized_product_definition = product_definition
characterized_product_definition
characterized_definition = characterized_product_definition
characterized_definition <-
property_definition.definition
property_definition =>
product_definition_shape <-
shape_aspect.of_shape
{shape_aspect
shape_aspect.description = 'pipe bend'}
shape_aspect <-
[shape_aspect_relationship.relating_shape_aspect
{shape_aspect_relationship
shape_aspect_relationship.name = 'pipe bend sweep angle centre point'}
shape_aspect_relationship
shape_aspect_relationship.related_shape_aspect ->
{shape_aspect
shape_aspect.description = 'sweep angle centre point'}
shape_aspect <-
shape_aspect_relationship.relating_shape_aspect]
[shape_aspect_relationship.relating_shape_aspect
shape_aspect_relationship
{shape_aspect_relationship
shape_aspect_relationship.name = 'pipe bend sweep angle centreline'}
shape_aspect_relationship.related_shape_aspect ->
{shape_aspect
shape_aspect.description = 'pipe centreline'}
shape_aspect <-
shape_aspect_relationship.related_shape_aspect]
shape_aspect_relationship =>
dimensional_location
dimensional_characteristic = dimensional_location
dimensional_characteristic <-
dimensional_characteristic_representation.dimension
dimensional_characteristic_representation
dimensional_characteristic_representation.representation ->
shape_dimension_representation <=
shape_representation <=
{representation

© ISO 2001 – All rights reserved

representation.name = 'pipe bend dimensional shape'}
representation
representation.items[i] ->
{representation_item
representation_item.name = 'centreline radius'}
representation_item =>
measure_representation_item <=
{measure_with_unit =>
length_measure_with_unit}
measure_with_unit
[measure_with_unit.value_component]
[measure_with_unit.unit_component]

5.1.9.66.3 sweep_angle

AIM element: [measure_with_unit.value_component]
[measure_with_unit.unit_component]

Source: 41

Reference path: piping_component_definition <=
product_definition
characterized_product_definition = product_definition
characterized_product_definition
characterized_definition = characterized_product_definition
characterized_definition <-
property_definition.definition
property_definition =>
product_definition_shape <-
shape_aspect.of_shape
{shape_aspect
shape_aspect.description = 'pipe bend'}
shape_aspect <-
[shape_aspect_relationship.relating_shape_aspect
{shape_aspect_relationship
shape_aspect_relationship.name = 'pipe bend start'}
shape_aspect_relationship
shape_aspect_relationship.related_shape_aspect ->
{shape_aspect
shape_aspect.description = 'pipe bend start'}
shape_aspect <-
shape_aspect_relationship.relating_shape_aspect]
[shape_aspect_relationship.relating_shape_aspect
shape_aspect_relationship
{shape_aspect_relationship
shape_aspect_relationship.name = 'pipe bend end'}
shape_aspect_relationship.related_shape_aspect ->
{shape_aspect
shape_aspect.description = 'pipe bend end'}
shape_aspect <-
shape_aspect_relationship.related_shape_aspect]
shape_aspect_relationship =>
dimensional_location
dimensional_characteristic = dimensional_location

© ISO 2001 – All rights reserved

dimensional_characteristic <-
dimensional_characteristic_representation.dimension
dimensional_characteristic_representation
dimensional_characteristic_representation.representation ->
shape_dimension_representation <=
shape_representation <=
{representation
representation.name = 'pipe bend dimensional shape'}
representation
representation.items[i] ->
{representation_item
representation_item.name = 'centreline radius'}
representation_item =>
measure_representation_item <=
{measure_with_unit =>
length_measure_with_unit}
measure_with_unit
[measure_with_unit.value_component]
[measure_with_unit.unit_component]

5.1.9.67 Tee

#1: The attributes are for an individual piping component.

#2: The attributes are for the definition of a family of piping components.

AIM element: #1: (piping_component_definition)
#2: (piping_component_class)

Source: 227

Rules: dependent_instantiable_product_context
product_context_discipline_type_constraint
value_for_application_context

Reference path: #1: (piping_component_definition <=
product_definition
{product_definition
product_definition.formation ->
product_definition_formation
product_definition_formation.of_product ->
[product
classification_item = product
classification_item <-
applied_classification_assignment.items[i]
applied_classification_assignment <=
classification_assignment
classification_assignment.assigned_classification ->
(group)
(group <-
group_relationship.related_group
group_relationship
group_relationship.relating_group ->
group)

© ISO 2001 – All rights reserved

group.name = 'tee']
[product
product.frame_of_reference[i] ->
product_context<=
application_context_element
application_context_element.name = 'plant item']})
#2: (piping_component_class <=
[characterized_object]
[group])

5.1.9.67.1 centre_to_end_1_length

#1: The attributes are for an individual piping component.

#2: The attributes are for the definition of a family of piping components.

AIM element: [measure_with_unit.value_component]
[measure_with_unit.unit_component]

Source: 41

Rules: subtype_exclusive_characterized_object
subtype_mandatory_shape_representation

Reference path: #1: (piping_component_definition <=
product_definition
characterized_product_definition = product_definition
characterized_product_definition
characterized_definition = characterized_product_definition
characterized_definition <-
property_definition.definition
property_definition =>
product_definition_shape <-
[shape_aspect.of_shape
{shape_aspect
shape_aspect.description = 'centre'}
shape_aspect <-
shape_aspect_relationship.relating_shape_aspect]
[shape_aspect.of_shape
{[shape_aspect =>
plant_item_connector]
[shape_aspect
shape_aspect.description = 'end 1']}
shape_aspect <-
shape_aspect_relationship.related_shape_aspect]
shape_aspect_relationship =>
dimensional_location
dimensional_characteristic = dimensional_location
dimensional_characteristic <-
dimensional_characteristic_representation.dimension
dimensional_characteristic_representation
dimensional_characteristic_representation.representation ->
shape_dimension_representation <=
shape_representation <=

© ISO 2001 – All rights reserved

{representation
representation.name = 'tee fitting dimensional shape'}
representation
representation.items[i] ->
{representation_item
representation_item.name = 'centre to end 1 length'})
#2: (piping_component_class <=
characterized_object
characterized_definition = characterized_object
characterized_definition <-
property_definition.definition
property_definition
represented_definition = property_definition
represented_definition <-
property_definition_representation.definition
property_definition_representation
property_definition_representation.used_representation ->
{representation
representation.name = 'tee fitting class dimensions'}
representation
(representation.items[i] ->
{representation_item
(representation_item.name = 'maximum centre to end 1 length')
(representation_item.name = 'minimum centre to end 1 length')})
([representation.items[i] ->
{representation_item
representation_item.name = 'maximum centre to end 1 length'}]
[representation.items[i] ->
{representation_item
representation_item.name = 'minimum centre to end 1 length'}]))
representation_item =>
measure_representation_item <=
{measure_with_unit =>
length_measure_with_unit}
measure_with_unit
[measure_with_unit.value_component]
[measure_with_unit.unit_component]

5.1.9.67.2 centre_to_end_2_length

#1: The attributes are for an individual piping component.

#2: The attributes are for the definition of a family of piping components.

AIM element: [measure_with_unit.value_component]
[measure_with_unit.unit_component]

Source: 41

Rules: subtype_exclusive_characterized_object
subtype_mandatory_shape_representation

Reference path: #1: (piping_component_definition <=
product_definition

© ISO 2001 – All rights reserved

```
characterized_product_definition = product_definition
characterized_product_definition
characterized_definition = characterized_product_definition
characterized_definition <-
property_definition.definition
property_definition =>
product_definition_shape <-
[shape_aspect.of_shape
{shape_aspect
shape_aspect.description = 'centre'}
shape_aspect <-
shape_aspect_relationship.relating_shape_aspect]
[shape_aspect.of_shape
{[shape_aspect =>
plant_item_connector]
[shape_aspect
shape_aspect.description = 'end 2']}
shape_aspect <-
shape_aspect_relationship.related_shape_aspect]
shape_aspect_relationship =>
dimensional_location
dimensional_characteristic = dimensional_location
dimensional_characteristic <-
dimensional_characteristic_representation.dimension
dimensional_characteristic_representation
dimensional_characteristic_representation.representation ->
shape_dimension_representation <=
shape_representation <=
{representation
representation.name = 'tee fitting dimensional shape'}
representation
representation.items[i] ->
{representation_item
representation_item.name = 'centre to end 2 length'})
#2: (piping_component_class <=
characterized_object
characterized_definition = characterized_object
characterized_definition <-
property_definition.definition
property_definition
represented_definition = property_definition
represented_definition <-
property_definition_representation.definition
property_definition_representation
property_definition_representation.used_representation ->
{representation
representation.name = 'tee fitting class dimensions'}
representation
(representation.items[i] ->
{representation_item
(representation_item.name = 'maximum centre to end 2 length')
(representation_item.name = 'minimum centre to end 2 length')})
([representation.items[i] ->
{representation_item
```


© ISO 2001 – All rights reserved

representation_item.name = 'maximum centre to end 2 length'}]
[representation.items[i] ->
{representation_item
representation_item.name = 'minimum centre to end 2 length'}]))
representation_item =>
measure_representation_item <=
{measure_with_unit =>
length_measure_with_unit}
measure_with_unit
[measure_with_unit.value_component]
[measure_with_unit.unit_component]

5.1.9.67.3 centre_to_end_3_length

#1: The attributes are for an individual piping component.

#2: The attributes are for the definition of a family of piping components.

AIM element: [measure_with_unit.value_component]
[measure_with_unit.unit_component]

Source: 41

Rules: subtype_exclusive_characterized_object
subtype_mandatory_shape_representation

Reference path: #1: (piping_component_definition <=
product_definition
characterized_product_definition = product_definition
characterized_product_definition
characterized_definition = characterized_product_definition
characterized_definition <-
property_definition.definition
property_definition =>
product_definition_shape <-
[shape_aspect.of_shape
{shape_aspect
shape_aspect.description = 'centre'}
shape_aspect <-
shape_aspect_relationship.relating_shape_aspect]
[shape_aspect.of_shape
{[shape_aspect =>
plant_item_connector]
[shape_aspect
shape_aspect.description = 'end 3']}
shape_aspect <-
shape_aspect_relationship.related_shape_aspect]
shape_aspect_relationship =>
dimensional_location
dimensional_characteristic = dimensional_location
dimensional_characteristic <-
dimensional_characteristic_representation.dimension
dimensional_characteristic_representation
dimensional_characteristic_representation.representation ->

© ISO 2001 – All rights reserved

shape_dimension_representation <=
shape_representation <=
{representation
representation.name = 'tee fitting dimensional shape'}
representation
representation.items[i] ->
{representation_item
representation_item.name = 'centre to end 3 length'})
#2: (piping_component_class <=
characterized_object
characterized_definition = characterized_object
characterized_definition <-
property_definition.definition
property_definition
represented_definition = property_definition
represented_definition <-
property_definition_representation.definition
property_definition_representation
property_definition_representation.used_representation ->
{representation
representation.name = 'tee fitting class dimensions'}
representation
(representation.items[i] ->
{representation_item
(representation_item.name = 'maximum centre to end 3 length')
(representation_item.name = 'minimum centre to end 3 length')})
([representation.items[i] ->
{representation_item
representation_item.name = 'maximum centre to end 3 length'}]
[representation.items[i] ->
{representation_item
representation_item.name = 'minimum centre to end 3 length'}]))
representation_item =>
measure_representation_item <=
{measure_with_unit =>
length_measure_with_unit}
measure_with_unit
[measure_with_unit.value_component]
[measure_with_unit.unit_component]

5.1.9.67.4 end_1_connector

AIM element: plant_item_connector

Source: 227

Reference path: piping_component_definition <=
product_definition
characterized_product_definition = product_definition
characterized_product_definition
characterized_definition = characterized_product_definition
characterized_definition <-
property_definition.definition
property_definition =>

© ISO 2001 – All rights reserved

product_definition_shape <-
shape_aspect.of_shape
{shape_aspect
shape_aspect.description = 'end 1'}
shape_aspect =>
plant_item_connector

5.1.9.67.5 end_2_connector

AIM element: plant_item_connector

Source: 227

Reference path: piping_component_definition <=
product_definition
characterized_product_definition = product_definition
characterized_product_definition
characterized_definition = characterized_product_definition
characterized_definition <-
property_definition.definition
property_definition =>
product_definition_shape <-
shape_aspect.of_shape
{shape_aspect
shape_aspect.description = 'end 2'}
shape_aspect =>
plant_item_connector

5.1.9.67.6 end_3_connector

AIM element: plant_item_connector

Source: 227

Reference path: piping_component_definition <=
product_definition
characterized_product_definition = product_definition
characterized_product_definition
characterized_definition = characterized_product_definition
characterized_definition <-
property_definition.definition
property_definition =>
product_definition_shape <-
shape_aspect.of_shape
{shape_aspect
shape_aspect.description = 'end 3'}
shape_aspect =>
plant_item_connector

5.1.9.68 Threaded_flange

AIM element: piping_component_definition

© ISO 2001 – All rights reserved

Source: 227

Rules: dependent_instantiable_product_context
product_context_discipline_type_constraint
value_for_application_context

Reference path: piping_component_definition <=
product_definition
{piping_component_definition
classification_item = piping_component_definition
classification_item <-
applied_classification_assignment.items[i]
applied_classification_assignment <=
classification_assignment
classification_assignment.assigned_classification ->
[group =>
flange_fitting_neck_type_class]
[group
group.name = 'threaded flange']}
{product_definition
product_definition.formation ->
product_definition_formation
product_definition_formation.of_product ->
[product
classification_item = product
classification_item <-
applied_classification_assignment.items[i]
applied_classification_assignment <=
classification_assignment
classification_assignment.assigned_classification ->
(group)
(group <-
group_relationship.related_group
group_relationship
group_relationship.relating_group ->
group)
group.name = 'flange']
[product
product.frame_of_reference[i] ->
product_context<=
application_context_element
application_context_element.name = 'plant item']}

5.1.9.69 Union

#1: The attributes are for an individual piping component.

#2: The attributes are for the definition of a family of piping components.

AIM element: #1: (piping_component_definition)
#2: (piping_component_class)

Source: 227

© ISO 2001 – All rights reserved

Rules: dependent_instantiable_product_context
product_context_discipline_type_constraint
value_for_application_context

Reference path: #1: (piping_component_definition <=
product_definition
{product_definition
product_definition.formation ->
product_definition_formation
product_definition_formation.of_product ->
[product
classification_item = product
classification_item <-
applied_classification_assignment.items[i]
applied_classification_assignment <=
classification_assignment
classification_assignment.assigned_classification ->
(group)
(group <-
group_relationship.related_group
group_relationship
group_relationship.relating_group ->
group)
group.name = 'union']
[product
product.frame_of_reference[i] ->
product_context<=
application_context_element
application_context_element.name = 'plant item']})
#2: (piping_component_class <=
[characterized_object]
[group])

5.1.9.69.1 end_1_connector

AIM element: plant_item_connector

Source: 227

Reference path: piping_component_definition <=
product_definition
characterized_product_definition = product_definition
characterized_product_definition
characterized_definition = characterized_product_definition
characterized_definition <-
property_definition.definition
property_definition =>
product_definition_shape <-
shape_aspect.of_shape
{shape_aspect
shape_aspect.description = 'end 1'}
shape_aspect =>
plant_item_connector

© ISO 2001 – All rights reserved

5.1.9.69.2 end_2_connector

AIM element: plant_item_connector

Source: 227

Reference path: piping_component_definition <=
product_definition
characterized_product_definition = product_definition
characterized_product_definition
characterized_definition = characterized_product_definition
characterized_definition <-
property_definition.definition
property_definition =>
product_definition_shape <-
shape_aspect.of_shape
{shape_aspect
shape_aspect.description = 'end 2'}
shape_aspect =>
plant_item_connector

5.1.9.69.3 end_to_end_length

#1: The attributes are for an individual piping component.

#2: The attributes are for the definition of a family of piping components.

AIM element: [measure_with_unit.value_component]
[measure_with_unit.unit_component]

Source: 41

Rules: subtype_exclusive_characterized_object
subtype_mandatory_shape_representation

Reference path: #1: (piping_component_definition <=
product_definition
characterized_product_definition = product_definition
characterized_product_definition
characterized_definition = characterized_product_definition
characterized_definition <-
property_definition.definition
property_definition =>
product_definition_shape <-
shape_aspect.of_shape
[{[shape_aspect =>
plant_item_connector]
[shape_aspect
shape_aspect.description = 'end 1']}
shape_aspect <-
shape_aspect_relationship.relating_shape_aspect]
[{[shape_aspect =>
plant_item_connector]
[shape_aspect

© ISO 2001 – All rights reserved

```
shape_aspect.description = 'end 2']}
shape_aspect <-
shape_aspect_relationship.related_shape_aspect]
shape_aspect_relationship =>
dimensional_location
dimensional_characteristic = dimensional_location
dimensional_characteristic <-
dimensional_characteristic_representation.dimension
dimensional_characteristic_representation
dimensional_characteristic_representation.representation ->
shape_dimension_representation <=
shape_representation <=
{representation
representation.name = 'union fitting dimensional shape'}
representation
representation.items[i] ->
{representation_item
representation_item.name = 'end to end length'})
#2: (piping_component_class <=
characterized_object
characterized_definition = characterized_object
characterized_definition <-
property_definition.definition
property_definition
represented_definition = property_definition
represented_definition <-
property_definition_representation.definition
property_definition_representation
property_definition_representation.used_representation ->
{representation
representation.name = 'union fitting class dimensions'}
representation
(representation.items[i] ->
{representation_item
(representation_item.name = 'maximum end to end length')
(representation_item.name = 'minimum end to end length')})
([representation.items[i] ->
{representation_item
representation_item.name = 'maximum end to end length'}]
[representation.items[i] ->
{representation_item
representation_item.name = 'minimum end to end length'}]))
representation_item =>
measure_representation_item <=
{measure_with_unit =>
length_measure_with_unit}
measure_with_unit
[measure_with_unit.value_component]
[measure_with_unit.unit_component]
```

5.1.9.69.4 major_outside_diameter

© ISO 2001 – All rights reserved

#1: The attributes are for an individual piping component.

#2: The attributes are for the definition of a family of piping components.

AIM element: [measure_with_unit.value_component]
[measure_with_unit.unit_component]

Source: 41

Rules: subtype_exclusive_characterized_object
subtype_mandatory_shape_representation

Reference path: #1: (piping_component_definition <=
product_definition
characterized_product_definition = product_definition
characterized_product_definition
characterized_definition = characterized_product_definition
characterized_definition <-
property_definition.definition
property_definition =>
product_definition_shape <-
shape_aspect.of_shape
shape_aspect <-
dimensional_size.applies_to
dimensional_size
dimensional_characteristic = dimensional_size
dimensional_characteristic <-
dimensional_characteristic_representation.dimension
dimensional_characteristic_representation
dimensional_characteristic_representation.representation ->
shape_dimension_representation <=
shape_representation <=
{representation
representation.name = 'union fitting dimensional shape'}
representation
representation.items[i] ->
{representation_item
representation_item.name = 'major outside diameter'})
#2: (piping_component_class <=
characterized_object
characterized_definition = characterized_object
characterized_definition <-
property_definition.definition
property_definition
represented_definition = property_definition
represented_definition <-
property_definition_representation.definition
property_definition_representation
property_definition_representation.used_representation ->
{representation
representation.name = 'union fitting class dimensions'}
representation
(representation.items[i] ->
{representation_item

© ISO 2001 – All rights reserved

(representation_item.name = 'maximum major outside diameter')
(representation_item.name = 'minimum major outside diameter')})
([representation.items[i] ->
{representation_item
representation_item.name = 'maximum major outside diameter'}]
[representation.items[i] ->
{representation_item
representation_item.name = 'minimum major outside diameter'}]))
representation_item =>
measure_representation_item <=
{measure_with_unit =>
length_measure_with_unit}
measure_with_unit
[measure_with_unit.value_component]
[measure_with_unit.unit_component]

5.1.9.69.5 minor_outside_diameter

#1: The attributes are for an individual piping component.

#2: The attributes are for the definition of a family of piping components.

AIM element: [measure_with_unit.value_component]
[measure_with_unit.unit_component]

Source: 41

Rules: subtype_exclusive_characterized_object
subtype_mandatory_shape_representation

Reference path: #1: (piping_component_definition <=
product_definition
characterized_product_definition = product_definition
characterized_product_definition
characterized_definition = characterized_product_definition
characterized_definition <-
property_definition.definition
property_definition =>
product_definition_shape <-
shape_aspect.of_shape
shape_aspect <-
dimensional_size.applies_to
dimensional_size
dimensional_characteristic = dimensional_size
dimensional_characteristic <-
dimensional_characteristic_representation.dimension
dimensional_characteristic_representation
dimensional_characteristic_representation.representation ->
shape_dimension_representation <=
shape_representation <=
{representation
representation.name = 'union fitting dimensional shape'}
representation
representation.items[i] ->

© ISO 2001 – All rights reserved

{representation_item
representation_item.name = 'minor outside diameter'})
#2: (piping_component_class <=
characterized_object
characterized_definition = characterized_object
characterized_definition <-
property_definition.definition
property_definition
represented_definition = property_definition
represented_definition <-
property_definition_representation.definition
property_definition_representation
property_definition_representation.used_representation ->
{representation
representation.name = 'union fitting class dimensions'}
representation
(representation.items[i] ->
{representation_item
(representation_item.name = 'maximum minor outside diameter')
(representation_item.name = 'minimum minor outside diameter')})
([representation.items[i] ->
{representation_item
representation_item.name = 'maximum minor outside diameter'}]
[representation.items[i] ->
{representation_item
representation_item.name = 'minimum minor outside diameter'}]))
representation_item =>
measure_representation_item <=
{measure_with_unit =>
length_measure_with_unit}
measure_with_unit
[measure_with_unit.value_component]
[measure_with_unit.unit_component]

5.1.9.70 Valve

AIM element: piping_component_definition

Source: 227

Rules: dependent_instantiable_product_context
product_context_discipline_type_constraint
value_for_application_context

Reference path: piping_component_definition <=
product_definition
{product_definition
product_definition.formation ->
product_definition_formation
product_definition_formation.of_product ->
[product
classification_item = product
classification_item <-
applied_classification_assignment.items[i]

© ISO 2001 – All rights reserved

applied_classification_assignment <=
classification_assignment
classification_assignment.assigned_classification ->
(group)
(group <-
group_relationship.related_group
group_relationship
group_relationship.relating_group ->
group)
group.name = 'valve']
[product
product.frame_of_reference[i] ->
product_context<=
application_context_element
application_context_element.name = 'plant item']}

5.1.9.70.1 actuator_type

AIM element: descriptive_representation_item.description

Source: 45

Reference path: piping_component_definition <=
product_definition
characterized_product_definition = product_definition
characterized_product_definition
characterized_definition = characterized_product_definition
characterized_definition <-
property_definition.definition
property_definition
represented_definition = property_definition
represented_definition <-
property_definition_representation.definition
property_definition_representation
property_definition_representation.used_representation ->
representation
representation.items[i] ->
{representation_item
representation_item.name = 'actuator type'}
representation_item =>
descriptive_representation_item
descriptive_representation_item.description

5.1.9.70.2 operation_mode

AIM element: descriptive_representation_item.description

Source: 45

Reference path: piping_component_definition <=
product_definition
characterized_product_definition = product_definition
characterized_product_definition

© ISO 2001 – All rights reserved

characterized_definition = characterized_product_definition
characterized_definition <-
property_definition.definition
property_definition
represented_definition = property_definition
represented_definition <-
property_definition_representation.definition
property_definition_representation
property_definition_representation.used_representation ->
representation
representation.items[i] ->
{representation_item
representation_item.name = 'operation mode'}
representation_item =>
descriptive_representation_item
descriptive_representation_item.description

5.1.9.70.3 type

AIM element: group.name

Source: 41

Reference path: piping_component_definition
classification_item = piping_component_definition
classification_item <-
applied_classification_assignment.items[i]
applied_classification_assignment <=
{classification_assignment
classification_assignment.role ->
classification_role
classification_role.name = 'valve type classification'}
classification_assignment
classification_assignment.assigned_classification ->
{group =>
valve_class}
group
group.name

5.1.9.70.4 end_to_end_length

AIM element: [measure_with_unit.value_component]
[measure_with_unit.unit_component]

Source: 41

Reference path: piping_component_definition <=
product_definition
characterized_product_definition = product_definition
characterized_product_definition
characterized_definition = characterized_product_definition
characterized_definition <-
property_definition.definition

© ISO 2001 – All rights reserved

property_definition =>
product_definition_shape <-
shape_aspect.of_shape
[{[shape_aspect =>
plant_item_connector]
[shape_aspect
shape_aspect.description = 'end 1']}
shape_aspect <-
shape_aspect_relationship.relating_shape_aspect]
[{[shape_aspect =>
plant_item_connector]
[shape_aspect
shape_aspect.description = 'end 2']}
shape_aspect <-
shape_aspect_relationship.related_shape_aspect]
shape_aspect_relationship =>
dimensional_location
dimensional_characteristic = dimensional_location
dimensional_characteristic <-
dimensional_characteristic_representation.dimension
dimensional_characteristic_representation
dimensional_characteristic_representation.representation ->
shape_dimension_representation <=
shape_representation <=
{representation
representation.name = 'valve dimensional shape'}
representation
representation.items[i] ->
{representation_item
representation_item.name = 'end to end length'}
representation_item =>
measure_representation_item <=
{measure_with_unit =>
length_measure_with_unit}
measure_with_unit
[measure_with_unit.value_component]
[measure_with_unit.unit_component]

5.1.9.70.5 valve_stem_orientation

AIM element: axis2_placement_3d.ref_direction

Source: 42

Reference path: (piping_component_definition <=
product_definition
characterized_product_definition
characterized_definition = characterized_product_definition
characterized_definition <-
property_definition.definition
{property_definition =>
product_definition_shape}
property_definition
represented_definition = property_definition

© ISO 2001 – All rights reserved

represented_definition <-
property_definition_representation.definition
{property_definition_representation =>
shape_definition_representation}
property_definition_representation
property_definition_representation.used_representation ->
representation
representation.items [i] ->
{representation_item
representation_item.name = 'valve stem orientation'}
representation_item =>
geometric_representation_item =>
placement =>
axis2_placement_3d
axis2_placement_3d.ref_direction

5.1.9.71 Weld_neck_flange

AIM element: piping_component_definition

Source: 227

Rules: dependent_instantiable_product_context
product_context_discipline_type_constraint
value_for_application_context

Reference path: piping_component_definition <=
product_definition
{piping_component_definition
classification_item = piping_component_definition
classification_item <-
applied_classification_assignment.items[i]
applied_classification_assignment <=
classification_assignment
classification_assignment.assigned_classification ->
[group =>
flange_fitting_neck_type_class]
[group
group.name = 'weld neck flange']}
{product_definition
product_definition.formation ->
product_definition_formation
product_definition_formation.of_product ->
[product
classification_item = product
classification_item <-
applied_classification_assignment.items[i]
applied_classification_assignment <=
classification_assignment
classification_assignment.assigned_classification ->
(group)
(group <-
group_relationship.related_group
group_relationship

© ISO 2001 – All rights reserved

group_relationship.relating_group ->
group)
group.name = 'flange']
[product
product.frame_of_reference[i] ->
product_context<=
application_context_element
application_context_element.name = 'plant item']}

5.1.9.72 Weld_neck_jacket_flange

AIM element: piping_component_definition

Source: 227

Rules: dependent_instantiable_product_context
product_context_discipline_type_constraint
value_for_application_context

Reference path: piping_component_definition <=
product_definition
{piping_component_definition
classification_item = piping_component_definition
classification_item <-
applied_classification_assignment.items[i]
applied_classification_assignment <=
classification_assignment
classification_assignment.assigned_classification ->
[group =>
flange_fitting_neck_type_class]
[group
group.name = 'weld neck jacket flange']
[group <-
group_relationship.related_group
{group_relationship
group_relationship.name = 'class hierarchy'}
group_relationship
group_relationship.relating_group ->
group
group.name = 'weld neck flange']}
{product_definition
product_definition.formation ->
product_definition_formation
product_definition_formation.of_product ->
[product
classification_item = product
classification_item <-
applied_classification_assignment.items[i]
applied_classification_assignment <=
{classification_assignment
classification_assignment.role ->
group_role
group_role.name = 'plant item type'}
classification_assignment

© ISO 2001 – All rights reserved

classification_assignment.assigned_classification ->
(group)
(group <-
group_relationship.related_group
group_relationship
group_relationship.relating_group ->
group)
group.name = 'weld neck jacket flange']
[product
product.frame_of_reference[i] ->
product_context<=
application_context_element
application_context_element.name = 'plant item']}

5.1.9.72.1 end_3_connector

AIM element: plant_item_connector

Source: 227

Reference path: piping_component_definition <=
product_definition
characterized_product_definition = product_definition
characterized_product_definition
characterized_definition = characterized_product_definition
characterized_definition <-
property_definition.definition
property_definition =>
product_definition_shape <-
shape_aspect.of_shape
{shape_aspect
shape_aspect.description = 'end 1'}
shape_aspect =>
plant_item_connector

5.1.9.73 Y_type_lateral

#1: The attributes are for an individual piping component.

#2: The attributes are for the definition of a family of piping components.

AIM element: #1: (piping_component_definition)
#2: (piping_component_class)

Source: 227

Rules: dependent_instantiable_product_context
product_context_discipline_type_constraint
value_for_application_context

Reference path: #1: (piping_component_definition <=
product_definition
{product_definition

© ISO 2001 – All rights reserved

product_definition.formation ->
product_definition_formation
product_definition_formation.of_product ->
[product
classification_item = product
classification_item <-
applied_classification_assignment.items[i]
applied_classification_assignment <=
classification_assignment
classification_assignment.assigned_classification ->
(group)
(group <-
group_relationship.related_group
group_relationship
group_relationship.relating_group ->
group)
group.name = 'Y type lateral']
[product
product.frame_of_reference[i] ->
product_context<=
application_context_element
application_context_element.name = 'plant item']})
#2: (piping_component_class <=
[characterized_object]
[group])

5.1.9.73.1 angle

#1: The attributes are for an individual piping component.

#2: The attributes are for the definition of a family of piping components.

AIM element: [measure_with_unit.value_component]
[measure_with_unit.unit_component]

Source: 41

Rules: subtype_exclusive_characterized_object
subtype_mandatory_shape_representation

Reference path: #1: (piping_component_definition <=
product_definition
characterized_product_definition = product_definition
characterized_product_definition
characterized_definition = characterized_product_definition
characterized_definition <-
property_definition.definition
property_definition =>
product_definition_shape <-
shape_aspect.of_shape
[shape_aspect <-
shape_aspect_relationship.relating_shape_aspect]
[shape_aspect <-
shape_aspect_relationship.related_shape_aspect]

© ISO 2001 – All rights reserved

shape_aspect_relationship =>
{dimensional_location =>
angular_location}
dimensional_location
dimensional_characteristic = dimensional_location
dimensional_characteristic <-
dimensional_characteristic_representation.dimension
dimensional_characteristic_representation
dimensional_characteristic_representation.representation ->
shape_dimension_representation <=
shape_representation <=
{representation
representation.name = 'y type lateral fitting dimensional shape'}
representation
representation.items[i] ->
{representation_item
representation_item.name = 'angle'})
#2: (piping_component_class <=
characterized_object
characterized_definition = characterized_object
characterized_definition <-
property_definition.definition
property_definition
represented_definition = property_definition
represented_definition <-
property_definition_representation.definition
property_definition_representation
property_definition_representation.used_representation ->
{representation
representation.name = 'y type lateral fitting class dimensions'}
representation
(representation.items[i] ->
{representation_item
(representation_item.name = 'maximum angle')
(representation_item.name = 'minimum angle')})
([representation.items[i] ->
{representation_item
representation_item.name = 'maximum angle'}]
[representation.items[i] ->
{representation_item
representation_item.name = 'minimum angle'}]))
representation_item =>
measure_representation_item <=
{measure_with_unit =>
plane_angle_measure_with_unit}
measure_with_unit
[measure_with_unit.value_component]
[measure_with_unit.unit_component]

5.1.9.73.2 centre_to_end_1_length

#1: The attributes are for an individual piping component.

© ISO 2001 – All rights reserved

#2: The attributes are for the definition of a family of piping components.

AIM element: [measure_with_unit.value_component]
[measure_with_unit.unit_component]

Source: 41

Rules: subtype_exclusive_characterized_object
subtype_mandatory_shape_representation

Reference path: #1: (piping_component_definition <=
product_definition
characterized_product_definition = product_definition
characterized_product_definition
characterized_definition = characterized_product_definition
characterized_definition <-
property_definition.definition
property_definition =>
product_definition_shape <-
[shape_aspect.of_shape
{shape_aspect
shape_aspect.description = 'centre'}
shape_aspect <-
shape_aspect_relationship.relating_shape_aspect]
[shape_aspect.of_shape
{[shape_aspect =>
plant_item_connector]
[shape_aspect
shape_aspect.description = 'end 1']}
shape_aspect <-
shape_aspect_relationship.related_shape_aspect]
shape_aspect_relationship =>
dimensional_location
dimensional_characteristic = dimensional_location
dimensional_characteristic <-
dimensional_characteristic_representation.dimension
dimensional_characteristic_representation
dimensional_characteristic_representation.representation ->
shape_dimension_representation <=
shape_representation <=
{representation
representation.name = 'y type lateral fitting dimensional shape'}
representation
representation.items[i] ->
{representation_item
representation_item.name = 'centre to end 1 length'})
#2: (piping_component_class <=
characterized_object
characterized_definition = characterized_object
characterized_definition <-
property_definition.definition
property_definition
represented_definition = property_definition
represented_definition <-

© ISO 2001 – All rights reserved

property_definition_representation.definition
property_definition_representation
property_definition_representation.used_representation ->
{representation
representation.name = 'y type lateral fitting class dimensions'}
representation
(representation.items[i] ->
{representation_item
(representation_item.name = 'maximum centre to end 1 length')
(representation_item.name = 'minimum centre to end 1 length')})
([representation.items[i] ->
{representation_item
representation_item.name = 'maximum centre to end 1 length'}]
[representation.items[i] ->
{representation_item
representation_item.name = 'minimum centre to end 1 length'}]))
representation_item =>
measure_representation_item <=
{measure_with_unit =>
length_measure_with_unit}
measure_with_unit
[measure_with_unit.value_component]
[measure_with_unit.unit_component]

5.1.9.73.3 centre_to_end_2_length

#1: The attributes are for an individual piping component.

#2: The attributes are for the definition of a family of piping components.

AIM element: [measure_with_unit.value_component]
[measure_with_unit.unit_component]

Source: 41

Rules: subtype_exclusive_characterized_object
subtype_mandatory_shape_representation

Reference path: #1: (piping_component_definition <=
product_definition
characterized_product_definition = product_definition
characterized_product_definition
characterized_definition = characterized_product_definition
characterized_definition <-
property_definition.definition
property_definition =>
product_definition_shape <-
[shape_aspect.of_shape
{shape_aspect
shape_aspect.description = 'centre'}
shape_aspect <-
shape_aspect_relationship.relating_shape_aspect]
[shape_aspect.of_shape
{[shape_aspect =>

© ISO 2001 – All rights reserved

```
plant_item_connector]
[shape_aspect
shape_aspect.description = 'end 2']}
shape_aspect <-
shape_aspect_relationship.related_shape_aspect]
shape_aspect_relationship =>
dimensional_location
dimensional_characteristic = dimensional_location
dimensional_characteristic <-
dimensional_characteristic_representation.dimension
dimensional_characteristic_representation
dimensional_characteristic_representation.representation ->
shape_dimension_representation <=
shape_representation <=
{representation
representation.name = 'y type lateral fitting dimensional shape'}
representation
representation.items[i] ->
{representation_item
representation_item.name = 'centre to end 2 length'})
#2: (piping_component_class <=
characterized_object
characterized_definition = characterized_object
characterized_definition <-
property_definition.definition
property_definition
represented_definition = property_definition
represented_definition <-
property_definition_representation.definition
property_definition_representation
property_definition_representation.used_representation ->
{representation
representation.name = 'y type lateral fitting class dimensions'}
representation
(representation.items[i] ->
{representation_item
(representation_item.name = 'maximum centre to end 2 length')
(representation_item.name = 'minimum centre to end 2 length')})
([representation.items[i] ->
{representation_item
representation_item.name = 'maximum centre to end 2 length'}]
[representation.items[i] ->
{representation_item
representation_item.name = 'minimum centre to end 2 length'}]))
representation_item =>
measure_representation_item <=
{measure_with_unit =>
length_measure_with_unit}
measure_with_unit
[measure_with_unit.value_component]
[measure_with_unit.unit_component]
```


© ISO 2001 – All rights reserved

5.1.9.73.4 centre_to_end_3_length

#1: The attributes are for an individual piping component.

#2: The attributes are for the definition of a family of piping components.

AIM element: [measure_with_unit.value_component]
[measure_with_unit.unit_component]

Source: 41

Rules: subtype_exclusive_characterized_object
subtype_mandatory_shape_representation

Reference path: #1: (piping_component_definition <=
product_definition
characterized_product_definition = product_definition
characterized_product_definition
characterized_definition = characterized_product_definition
characterized_definition <-
property_definition.definition
property_definition =>
product_definition_shape <-
[shape_aspect.of_shape
{shape_aspect
shape_aspect.description = 'centre'}
shape_aspect <-
shape_aspect_relationship.relating_shape_aspect]
[shape_aspect.of_shape
{[shape_aspect =>
plant_item_connector]
[shape_aspect
shape_aspect.description = 'end 3']}
shape_aspect <-
shape_aspect_relationship.related_shape_aspect]
shape_aspect_relationship =>
dimensional_location
dimensional_characteristic = dimensional_location
dimensional_characteristic <-
dimensional_characteristic_representation.dimension
dimensional_characteristic_representation
dimensional_characteristic_representation.representation ->
shape_dimension_representation <=
shape_representation <=
{representation
representation.name = 'y type lateral fitting dimensional shape'}
representation
representation.items[i] ->
{representation_item
representation_item.name = 'centre to end 3 length'})
#2: (piping_component_class <=
characterized_object
characterized_definition = characterized_object
characterized_definition <-

© ISO 2001 – All rights reserved

property_definition.definition
property_definition
represented_definition = property_definition
represented_definition <-
property_definition_representation.definition
property_definition_representation
property_definition_representation.used_representation ->
{representation
representation.name = 'y type lateral fitting class dimensions'}
representation
(representation.items[i] ->
{representation_item
(representation_item.name = 'maximum centre to end 3 length')
(representation_item.name = 'minimum centre to end 3 length')})
([representation.items[i] ->
{representation_item
representation_item.name = 'maximum centre to end 3 length'}]
[representation.items[i] ->
{representation_item
representation_item.name = 'minimum centre to end 3 length'}]))
representation_item =>
measure_representation_item <=
{measure_with_unit =>
length_measure_with_unit}
measure_with_unit
[measure_with_unit.value_component]
[measure_with_unit.unit_component]

5.1.9.73.5 end_1_connector

AIM element: plant_item_connector

Source: 227

Reference path: piping_component_definition <=
product_definition
characterized_product_definition = product_definition
characterized_product_definition
characterized_definition = characterized_product_definition
characterized_definition <-
property_definition.definition
property_definition =>
product_definition_shape <-
shape_aspect.of_shape
{shape_aspect
shape_aspect.description = 'end 1'}
shape_aspect =>
plant_item_connector

5.1.9.73.6 end_2_connector

AIM element: plant_item_connector

© ISO 2001 – All rights reserved

Source: 227

Reference path: piping_component_definition <=
product_definition
characterized_product_definition = product_definition
characterized_product_definition
characterized_definition = characterized_product_definition
characterized_definition <-
property_definition.definition
property_definition =>
product_definition_shape <-
shape_aspect.of_shape
{shape_aspect
shape_aspect.description = 'end 2'}
shape_aspect =>
plant_item_connector

5.1.9.73.7 end_3_connector

AIM element: plant_item_connector

Source: 227

Reference path: piping_component_definition <=
product_definition
characterized_product_definition = product_definition
characterized_product_definition
characterized_definition = characterized_product_definition
characterized_definition <-
property_definition.definition
property_definition =>
product_definition_shape <-
shape_aspect.of_shape
{shape_aspect
shape_aspect.description = 'end 3'}
shape_aspect =>
plant_item_connector

5.1.10 Piping_inspection UoF

5.1.10.1 Connection_inspection_record

AIM element: material_property

Source: 45

Reference path: {material_property <=
property_definition
property_definition.description = 'connection inspection record'}

5.1.10.1.1 inspected_property_name

© ISO 2001 – All rights reserved

AIM element: property_definition.name

Source: 41

Reference path: {material_property <=
property_definition
property_definition.name}

5.1.10.1.2 connection_type

AIM element: group.name

Source: 41

Reference path: material_property
classification_item = material_property
classification_item <-
applied_classification_assignment.items[i]
applied_classification_assignment <=
classification_assignment
{classification_assignment.role ->
classification_role
classification_role.name = 'connection type'}
classification_assignment.assigned_classification ->
group
group.name

5.1.10.1.3 inspection_type

AIM element: group.name

Source: 41

Reference path: material_property
classification_item = material_property
classification_item <-
applied_classification_assignment.items[i]
applied_classification_assignment <=
classification_assignment
{classification_assignment.role ->
classification_role
classification_role.name = 'inspection type'}
classification_assignment.assigned_classification ->
group
group.name

5.1.10.1.4 weld_id

AIM element: identification_assignment.assigned_id

Source: 41

© ISO 2001 – All rights reserved

Reference path: material_property
identification_item = material_property
identification_item <-
applied_identification_assignment.items[i]
applied_identification_assignment <=
identification_assignment
{identification_assignment.role ->
identification_role
identification_role.name = 'weld id'}
identification_assignment.assigned_id

5.1.10.1.5 connecting_portion_id

AIM element: identification_assignment.assigned_id

Reference path: material_property
identification_item = document
identification_item <-
applied_identification_assignment.items[i]
applied_identification_assignment <=
identification_assignment
{identification_assignment.role ->
identification_role
identification_role.name = 'connecting portion id'}
identification_assignment.assigned_id

5.1.10.1.6 inspected_property_tolerance

AIM element: qualified_representation_item

Source: 45

Reference path: material_property <=
property_definition <-
property_definition_representation.definition
property_definition_representation
{ property_definition_representation =>
material_property_representation}
property_definition_representation.using_representation ->
representation
representation.items[i] ->
representation_item =>
{representation_item.name = 'inspected property tolerance'}
qualified_representation_item

5.1.10.1.7 inspected_property_measured_value

AIM element: [measure_with_unit.value_component]
[measure_with_unit.unit_component]

Source: 41

© ISO 2001 – All rights reserved

Reference path: material_property <=
property_definition <-
property_definition_representation.definition
property_definition_representation
{ property_definition_representation =>
material_property_representation}
property_definition_representation.using_representation ->
representation
representation.items[i] ->
representation_item =>
{representation_item.name = 'inspected property measured value'}
measure_representation_item
[measure_with_unit.value_component]
[measure_with_unit.unit_component]

5.1.10.1.8 connection_inspection_record to document

AIM element: PATH

Reference path: material_property
document_item = material_property
document_item <-
applied_document_reference.items[i]
applied_document_reference <=
document_reference
document_reference.assigned_document ->
document

5.1.10.2 Inspection_condition

AIM element: data_environment

Source: 45

Reference path: {data_environment.description = 'inspection condition'}

5.1.10.2.1 condition_name

AIM element: data_environment.name

Source: 45

Reference path: data_environment
data_environment.name

5.1.10.2.2 value

AIM element: [measure_representation_item.value_component]
[measure_representation_item.unit_component]

Source: 41

© ISO 2001 – All rights reserved

Reference path: data_environment
data_environment.elements ->
property_definition_representation
{property_definition_representation.definition ->
represented_definition
represented_definition = property_definition
property_definition.definition ->
characterized_definition
characterized_definition = characterized_object}
property_definition_representation.using_representation ->
representation
representation.items[i] ->
representation_item =>
{representation_item.name = 'inspection condition value'}
measure_representation_item <=
measure_with_unit
[measure_representation_item.value_component]
[measure_representation_item.unit_component]

5.1.10.3 Piping_component_inspection_record

AIM element: material_property

Source: 45

Reference path: {material_property <=
property_definition
property_definition_description = 'piping component inspection record'}

5.1.10.3.1 inspected_property_name

AIM element: property_definition.name

Source: 41

Reference path: material_property <=
property_definition
property_definition.name

5.1.10.3.2 inspected_property_tolerance

AIM element: qualified_representation_item

Source: 45

Reference path: material_property <=
property_definition <-
property_definition_representation.definition
property_definition_representation
{ property_definition_representation =>
material_property_representation}
property_definition_representation.using_representation ->
representation

© ISO 2001 – All rights reserved

representation.items[i] ->
representation_item =>
{representation_item.name = 'inspected property tolerance'}
qualified_representation_item

5.1.10.3.3 inspected_property_measured_value

AIM element: [measure_with_unit.value_component]
[measure_with_unit.unit_component]

Source: 41

Reference path: material_property <=
property_definition <-
property_definition_representation.definition
property_definition_representation
{ property_definition_representation =>
material_property_representation}
property_definition_representation.using_representation ->
representation
representation.items[i] ->
representation_item =>
{representation_item.name = 'inspected property measured value'}
measure_representation_item
[measure_with_unit.value_component]
[measure_with_unit.unit_component]

5.1.10.3.4 piping_component_inspection_record to piping_component

NOTE For the purpose of this mapping, only the subset of the mapping of the Piping_component specified in the reference path is applicable.

AIM element: PATH

Reference path: material_property <=
property_definition
{property_definition.description = 'piping component inspection record'}
property_definition.definition ->
characterized_definition =
characterized_product_definition ->
product_definition =>
piping_component_definition

5.1.10.3.5 piping_component_inspection_record to plant_item_connector

AIM element: PATH

Reference path: material_property <=
property_definition
{property_definition.description = 'piping component inspection record'}
property_definition.definition ->
characterized_definition =
shape_definition =

© ISO 2001 – All rights reserved

shape_aspect =>
plant_item_connector

5.1.10.3.6 piping_component_inspection_record to document

AIM element: PATH

Reference path: material_property
document_item = material_property
document_item <-
applied_document_reference.items[i]
applied_document_reference <=
document_reference
document_reference.assigned_document ->
document

5.1.10.4 Piping_spool_inspection_record

AIM element: material_property

Source: 45

Reference path: {material_property <=
property_definition
property_definition.description = 'piping spool inspection record'}

5.1.10.4.1 inspected_property_name

AIM element: property_definition.name

Source: 41

Reference path: material_property <=
property_definition
property_definition.name

5.1.10.4.2 inspected_property_tolerance

AIM element: qualified_representation_item

Source: 45

Reference path: material_property <=
property_definition <-
property_definition_representation.definition
property_definition_representation
{ property_definition_representation =>
material_property_representation}
property_definition_representation.using_representation ->
representation
representation.items[i] ->
representation_item =>

© ISO 2001 – All rights reserved

{representation_item.name = 'inspected property tolerance'}
qualified_representation_item

5.1.10.4.3 inspected_property_measured_value

AIM element: [measure_with_unit.value_component]
[measure_with_unit.unit_component]

Source: 41

Reference path: material_property <=
property_definition <-
property_definition_representation.definition
property_definition_representation
{ property_definition_representation =>
material_property_representation}
property_definition_representation.using_representation ->
representation
representation.items[i] ->
representation_item =>
{representation_item.name = 'inspected property measured value'}
measure_representation_item
[measure_with_unit.value_component]
[measure_with_unit.unit_component]

5.1.10.4.4 piping_spool_inspection_record to piping_spool

AIM element: PATH

Reference path: material_property =>
property_definition
{property_definition.description = 'piping spool inspection record'}
property_definition.definition ->
characterized_definition =
characterized_product_definition =
product_definition =>
piping_spool_definition

5.1.10.4.5 piping_spool_inspection_record to document

AIM element: PATH

Reference path: material_property
document_item = material_property
document_item <-
applied_document_reference.items[i]
applied_document_reference <=
document_reference
document_reference.assigned_document ->
document

© ISO 2001 – All rights reserved

5.1.10.4.6 piping_spool_inspection_record to inspection_condition

AIM element: PATH

Reference path: material_property <=
property_definition <-
{property_definition.description = 'piping spool inspection record'}
property_definition_representation.definition
property_definition_representation =>
material_property_representation
material_property_representation.dependent_environment ->
data_environment
{data_environment.description = 'inspection condition'}

5.1.10.5 Shape_inspection_record

AIM element: property_definition

Source: 41

Reference path: {property_definition.description = 'shape inspection record'}

5.1.10.5.1 shape_inspection_property_name

AIM element: property_definition.name

Source: 41

Reference path:

5.1.10.5.2 shape_inspection_property_sequence_number

AIM element: descriptive_representation_item.description

Source: 45

Reference path: material_property <=
property_definition <-
property_definition_representation.definition
property_definition_representation
{ property_definition_representation =>
material_property_representation}
property_definition_representation.using_representation ->
representation
representation.items[i] ->
representation_item =>
{representation_item.name = 'inspected property sequence number'}
descriptive_representation_item
descriptive_representation_item.description

© ISO 2001 – All rights reserved

5.1.10.5.3 inspected_property_tolerance

AIM element: qualified_representation_item

Source: 45

Reference path: material_property <=
property_definition <-
property_definition_representation.definition
property_definition_representation
{ property_definition_representation =>
material_property_representation}
property_definition_representation.using_representation ->
representation
representation.items[i] ->
representation_item =>
{representation_item.name = 'inspected property tolerance'}
qualified_representation_item

5.1.10.5.4 inspected_property_measured_value

AIM element: [measure_with_unit.value_component]
[measure_with_unit.unit_component]

Source: 41

Reference path: material_property <=
property_definition <-
property_definition_representation.definition
property_definition_representation
{ property_definition_representation =>
material_property_representation}
property_definition_representation.using_representation ->
representation
representation.items[i] ->
representation_item =>
{representation_item.name = 'inspected property measured value'}
measure_representation_item
[measure_with_unit.value_component]
[measure_with_unit.unit_component]

5.1.10.5.5 shape_inspection_record to piping_spool

AIM element: PATH

Reference path: property_definition
{property_definition.description = 'shape inspection record'}
property_definition.definition ->
characterized_definition =
characterized_product_definition =
product_definition =>
piping_spool_definition

© ISO 2001 – All rights reserved

5.1.10.5.6 shape_inspection_record to plant_item_connector

AIM element: PATH

Reference path: property_definition
{property_definition.description = 'shape inspection record'}
property_definition.definition ->
characterized_definition =
shape_definition =
shape_aspect =>
plant_item_connector

5.1.11 Piping_system_functional_characterization UoF

5.1.11.1 Line_branch_connection

AIM element: line_branch_connection

Source: 227

Reference path: line_branch_connection <=
shape_aspect_relationship
{shape_aspect_relationship
[shape_aspect_relationship.description = 'branch location']
[shape_aspect_relationship.relating_shape_aspect ->
shape_aspect
shape_aspect.of_shape ->
product_definition_shape <=
property_definition
property_definition.definition ->
characterized_definition
characterized_definition = characterized_product_definition
characterized_product_definition
characterized_product_definition = product_definition
product_definition =>
plant_line_segment_definition]
[shape_aspect_relationship.related_shape_aspect ->
shape_aspect =>
plant_line_segment_termination]}

5.1.11.1.1 branch_sequence_id

AIM element: shape_aspect_relationship.name

Source: 41

Reference path: line_branch_connection <=
{shape_aspect_relationship
shape_aspect_relationship.relating_shape_aspect ->
shape_aspect
shape_aspect.of_shape ->
product_definition_shape <-

© ISO 2001 – All rights reserved

[shape_aspect.of_shape
shape_aspect
shape_aspect.description = 'termination 1']
[shape_aspect.of_shape
shape_aspect
shape_aspect.description = 'termination 2']}
shape_aspect_relationship
shape_aspect_relationship.name

5.1.11.1.2 line_branch_connection to changed_line_branch_connection

AIM element: IDENTICAL MAPPING

5.1.11.2 Line_branch_termination

AIM element: plant_line_segment_termination

Source: 227

Reference path: plant_line_segment_termination <=
shape_aspect

5.1.11.2.1 line_branch_termination to line_branch_connection

AIM element: PATH

Reference path: plant_line_segment_termination <=
shape_aspect <-
shape_aspect_relationship.related_shape_aspect
shape_aspect_relationship

5.1.11.3 Line_piping_system_component_assignment

AIM element: product_definition_relationship

Source: 41

Reference path: {product_definition_relationship
[product_definition_relationship.name = 'realization']
[product_definition_relationship.relating_product_definition ->
{product_definition =>
plant_line_segment_definition}
product_definition
product_definition.frame_of_reference ->
product_definition_context <=
application_context_element
application_context_element.name = 'functional definition']
[product_definition_relationship.related_product_definition ->
{product_definition =>
piping_component_definition}
product_definition
product_definition.frame_of_reference ->

© ISO 2001 – All rights reserved

product_definition_context <=
application_context_element
(application_context_element.name = 'functional occurrence')
(application_context_element.name = 'physical occurrence')]}

5.1.11.3.1 line_piping_system_component_assignment to changed_line_-assignment

AIM element: IDENTICAL MAPPING

5.1.11.4 Line_plant_item_branch_connection

AIM element: line_plant_item_branch_connection

Source: 227

Reference path: line_plant_item_branch_connection <=
shape_aspect_relationship
{shape_aspect_relationship
[shape_aspect_relationship.relating_shape_aspect ->
shape_aspect
shape_aspect.of_shape ->
product_definition_shape <=
property_definition
property_definition.definition ->
characterized_definition
characterized_definition = characterized_product_definition
characterized_product_definition
characterized_product_definition = product_definition
product_definition =>
plant_line_segment_definition]
[shape_aspect_relationship.related_shape_aspect ->
shape_aspect =>
plant_item_connector]}

5.1.11.4.1 branch_sequence_id

AIM element: shape_aspect_relationship.name

Source: 41

Reference path: line_plant_item_branch_connection <=
{shape_aspect_relationship
shape_aspect_relationship.relating_shape_aspect ->
shape_aspect
shape_aspect.of_shape ->
product_definition_shape <-
[shape_aspect.of_shape
shape_aspect
shape_aspect.description = 'termination 1']
[shape_aspect.of_shape
shape_aspect

© ISO 2001 – All rights reserved

shape_aspect.description = 'termination 2']}
shape_aspect_relationship
shape_aspect_relationship.name

5.1.11.4.2 line_plant_item_branch_connection to changed_line_plant_-item_branch_connection

AIM element: IDENTICAL MAPPING

5.1.11.5 Line_plant_item_branch_connector

AIM element: plant_item_connector

Source: 227

Reference path: plant_item_connector <=
shape_aspect
{shape_aspect
[shape_aspect.description = 'line plant item branch connector']
[shape_aspect.of_shape ->
product_definition_shape <=
property_definition
property_definition.definition ->
characterized_definition
characterized_definition = characterized_product_definition
characterized_product_definition
characterized_product_definition = product_definition
product_definition
product_definition.frame_of_reference ->
product_definition_context <=
application_context_element
application_context_element.name = 'functional occurrence']}

5.1.11.5.1 line_plant_item_branch_connector to line_plant_item_branch_-connection

AIM element: PATH

Reference path: plant_item_connector <=
shape_aspect <-
shape_aspect_relationship.related_shape_aspect
shape_aspect_relationship =>
line_plant_item_branch_connection

5.1.11.6 Line_plant_item_connection

AIM element: line_plant_item_connection

Source: 227

Reference path: line_plant_item_connection <=
shape_aspect_relationship

© ISO 2001 – All rights reserved

{shape_aspect_relationship
[shape_aspect_relationship.relating_shape_aspect ->
shape_aspect =>
plant_line_segment_termination]
[shape_aspect_relationship.related_shape_aspect ->
{shape_aspect <=
plant_item_connector}
shape_aspect
shape_aspect.of_shape ->
product_definition_shape <=
property_definition
property_definition.definition ->
characterized_definition
characterized_definition = characterized_product_definition
characterized_product_definition
characterized_product_definition = product_definition
(product_definition)
(product_definition =>
externally_defined_plant_item_definition)]}

5.1.11.6.1 line_plant_item_connection to changed_line_plant_item_-connection

AIM element: IDENTICAL MAPPING

5.1.11.7 Line_plant_item_connector

AIM element: plant_item_connector

Source: 227

Reference path: plant_item_connector <=
shape_aspect
{shape_aspect
[shape_aspect.description = 'line plant item connector']
[shape_aspect.of_shape ->
product_definition_shape <=
property_definition
property_definition.definition ->
characterized_definition
characterized_definition = characterized_product_definition
characterized_product_definition
characterized_product_definition = product_definition
product_definition
product_definition.frame_of_reference ->
product_definition_context <=
application_context_element
application_context_element.name = 'functional occurrence'}

5.1.11.7.1 line_plant_item_connector to line_plant_item_connection

© ISO 2001 – All rights reserved

AIM element: PATH

Reference path: plant_item_connector <=
shape_aspect <-
shape_aspect_relationship.relating_shape_aspect
shape_aspect_relationship =>
line_plant_item_connection

5.1.11.8 Line_plant_item_termination

AIM element: plant_line_segment_termination

Source: 227

Reference path: plant_line_segment_termination <=
shape_aspect

5.1.11.8.1 line_plant_item_termination to line_plant_item_connection

AIM element: PATH

Reference path: plant_line_segment_termination <=
shape_aspect <-
shape_aspect_relationship.related_shape_aspect
shape_aspect_relationship =>
line_plant_item_connection

5.1.11.9 Line_to_line_connection

AIM element: line_termination_connection

Source: 227

Reference path: line_termination_connection <=
shape_aspect_relationship

5.1.11.9.1 line_to_line_connection_id

AIM element: shape_aspect_relationship.name

Source: 41

Reference path: line_termination_connection <=
shape_aspect_relationship
shape_aspect_relationship.name

5.1.11.9.2 line_to_line_connection to changed_line_to_line_connection

AIM element: IDENTICAL MAPPING

© ISO 2001 – All rights reserved

5.1.11.9.3 line_to_line_connection to line_to_line_termination

AIM element: PATH

Reference path: line_termination_connection <=
shape_aspect_relationship
[shape_aspect_relationship.relating_shape_aspect ->
shape_aspect =>
(connection_node)
(plant_line_segment_termination)]
[shape_aspect_relationship.related_shape_aspect ->
shape_aspect =>
plant_line_segment_termination]

5.1.11.10 Line_to_line_termination

AIM element: plant_line_segment_termination

Source: 227

Reference path: plant_line_segment_termination <=
shape_aspect

5.1.11.11 Piping_specification

AIM element: document

Source: 41

Reference path: {document
document.kind ->
document_type
document_type.product_data_type = 'piping specification'}

5.1.11.11.1 name

AIM element: document.name

Source: 41

5.1.11.11.2 owner

AIM element: (organization.name)
([person.first_name]
[person.last_name])

Source: 41

Reference path: document
(plant_spatial_configuration_organization_item = document
plant_spatial_configuration_organization_item <-
plant_spatial_configuration_organization_assignment.items[i]

© ISO 2001 – All rights reserved

plant_spatial_configuration_organization_assignment <=
{organization_assignment
organization_assignment.role ->
organization_role
organization_role.name = 'owner'}
organization_assignment
organization_assignment.assigned_organization ->
organization
organization.name)
(plant_spatial_configuration_person_item = document
plant_spatial_configuration_person_item <-
plant_spatial_configuration_person_assignment.items[i]
plant_spatial_configuration_person_assignment <=
{person_assignment
person_assignment.role ->
person_role
person_role.name = 'owner'}
person_assignment
person_assignment.assigned_person ->
person
[person.first_name]
[person.last_name])

5.1.11.11.3 piping_specification_id

AIM element: document.id

Source: 41

5.1.11.11.4 service_description

AIM element: document_usage_constraint

Source: 41

Reference path: document <-
document_usage_constraint.source
document_usage_constraint
{document_usage_constraint
document_usage_constraint.subject_element = 'service description'}

5.1.11.11.5 piping_specification to changed_piping_specification

AIM element: IDENTICAL MAPPING

5.1.11.11.6 piping_specification to family_definition

AIM element: PATH

Reference path: document <-
document_reference.assigned_document
document_reference =>

© ISO 2001 – All rights reserved

applied_document_reference
applied_document_reference.items[i] ->
document_item
document_item = piping_component_class
piping_component_class

5.1.11.11.7 piping_specification to piping_system_line_segment

AIM element: PATH

Reference path: document <-
document_reference.assigned_document
document_reference =>
applied_document_reference
applied_document_reference.items[i] ->
document_item
document_item = plant_line_segment_definition
plant_line_segment_definition

5.1.11.12 Piping_system_line

AIM element: plant_line_definition

Source: 227

Reference path: plant_line_definition <=
product_definition_with_associated_documents
{product_definition_with_associated_documents <=
product_definition
product_definition.frame_of_reference ->
product_definition_context <=
application_context_element
application_context_element.name = 'functional definition'}

5.1.11.12.1 line_number

AIM element: product_definition.description

Source: 41

Reference path: plant_line_definition <=
product_definition_with_associated_documents <=
product_definition
product_definition.description

5.1.11.12.2 P_and_i_reference

AIM element: document

Source: 41

Reference path: plant_line_definition <=

© ISO 2001 – All rights reserved

product_definition_with_associated_documents
product_definition_with_associated_documents.documentation_ids[i] ->
document

5.1.11.12.3 piping_system_line_id

AIM element: product_definition.id

Source: 41

Reference path: plant_line_definition <=
product_definition_with_associated_documents <=
product_definition
product_definition.id

5.1.11.12.4 piping_system_line to changed_piping_system_line

AIM element: IDENTICAL MAPPING

5.1.11.12.5 piping_system_line to piping_system_line_segment

AIM element: PATH

Reference path: plant_line_definition <=
product_definition_with_associated_documents <=
product_definition <-
product_definition_relationship.relating_product_definition
product_definition_relationship
product_definition_relationship.related_product_definition ->
product_definition =>
plant_line_segment_definition

5.1.11.13 Piping_system_line_segment

AIM element: plant_line_segment_definition

Source: 227

Reference path: plant_line_segment_definition <=
product_definition
{product_definition
product_definition.frame_of_reference ->
product_definition_context <=
application_context_element
application_context_element.name = 'functional definition'}

5.1.11.13.1 coating_reference

AIM element: document_usage_constraint

Source: 41

© ISO 2001 – All rights reserved

Reference path: plant_line_segment_definition
document_item = plant_line_segment_definition
document_item <-
applied_document_reference.items[i]
applied_document_reference <=
document_reference
document_reference.assigned_document ->
document <-
document_usage_constraint.source
document_usage_constraint
{document_usage_constraint
document_usage_constraint.subject_element = 'coating reference'}

5.1.11.13.2 corrosion_allowance

AIM element: ([measure_with_unit.value_component]
[measure_with_unit.unit_component])
([measure_with_unit.value_component]
[measure_with_unit.unit_component]
[document_usage_constraint.subject_element_value])

Source: 41

Reference path: plant_line_segment_definition <=
product_definition
characterized_product_definition = product_definition
characterized_product_definition
characterized_definition = characterized_product_definition
characterized_definition <-
property_definition.definition
property_definition
represented_definition = property_definition
represented_definition <-
property_definition_representation.definition
property_definition_representation
property_definition_representation.used_representation ->
{representation
representation.name = 'line segment characteristics'}
representation
representation.items[i] ->
{representation_item
representation_item.name = 'corrosion allowance'}
(representation_item =>
measure_representation_item <=
measure_with_unit
[measure_with_unit.value_component]
[measure_with_unit.unit_component])
([representation_item =>
measure_representation_item <=
measure_with_unit
[measure_with_unit.value_component]
[measure_with_unit.unit_component]]
[representation_item
document_item = representation_item

© ISO 2001 – All rights reserved

document_item <-
applied_document_reference.items[i]
applied_document_reference <=
document_reference
document_reference.assigned_document ->
document <-
document_usage_constraint
document_usage_constraint.subject_element_value])

5.1.11.13.3 design_pressure

AIM element: ([measure_with_unit.value_component]
[measure_with_unit.unit_component])
([measure_with_unit.value_component]
[measure_with_unit.unit_component]
[document_usage_constraint.subject_element_value])

Source: 41

Reference path: plant_line_segment_definition <=
product_definition
characterized_product_definition = product_definition
characterized_product_definition
characterized_definition = characterized_product_definition
characterized_definition <-
property_definition.definition
property_definition
represented_definition = property_definition
represented_definition <-
property_definition_representation.definition
property_definition_representation
property_definition_representation.used_representation ->
{representation
representation.name = 'line segment characteristics'}
representation
representation.items[i] ->
{representation_item
representation_item.name = 'design pressure'}
(representation_item =>
measure_representation_item <=
measure_with_unit
[{measure_with_unit.value_component ->
measure_value
measure_value = ratio_measure}
measure_with_unit.value_component]
[{measure_with_unit.unit_component ->
unit
unit = derived_unit}
measure_with_unit.unit_component])
([representation_item =>
measure_representation_item <=
measure_with_unit
[{measure_with_unit.value_component ->
measure_value

© ISO 2001 – All rights reserved

measure_value = ratio_measure}
measure_with_unit.value_component]
[{measure_with_unit.unit_component ->
unit
unit = derived_unit}
measure_with_unit.unit_component]]
[representation_item
document_item = representation_item
document_item <-
applied_document_reference.items[i]
applied_document_reference <=
document_reference
document_reference.assigned_document ->
document <-
document_usage_constraint
document_usage_constraint.subject_element_value])

5.1.11.13.4 design_temperature

AIM element: ([measure_with_unit.value_component]
[measure_with_unit.unit_component])
([measure_with_unit.value_component]
[measure_with_unit.unit_component]
[document_usage_constraint.subject_element_value])

Source: 41

Reference path: plant_line_segment_definition <=
product_definition
characterized_product_definition = product_definition
characterized_product_definition
characterized_definition = characterized_product_definition
characterized_definition <-
property_definition.definition
property_definition
represented_definition = property_definition
represented_definition <-
property_definition_representation.definition
property_definition_representation
property_definition_representation.used_representation ->
{representation
representation.name = 'line segment characteristics'}
representation
representation.items[i] ->
{representation_item
representation_item.name = 'design temperature'}
(representation_item =>
measure_representation_item <=
{measure_with_unit =>
thermodynamic_temperature_measure_with_unit}
measure_with_unit
[measure_with_unit.value_component]
[measure_with_unit.unit_component])
([representation_item =>

© ISO 2001 – All rights reserved

measure_representation_item <=
{measure_with_unit =>
thermodynamic_temperature_measure_with_unit}
measure_with_unit
[measure_with_unit.value_component]
[measure_with_unit.unit_component]]
[representation_item
document_item = representation_item
document_item <-
applied_document_reference.items[i]
applied_document_reference <=
document_reference
document_reference.assigned_document ->
document <-
document_usage_constraint
document_usage_constraint.subject_element_value])

5.1.11.13.5 elevation

AIM element: [measure_with_unit.value_component]
[measure_with_unit.unit_component]

Source: 41

Reference path: plant_line_segment_definition <=
product_definition
characterized_product_definition = product_definition
characterized_product_definition
characterized_definition = characterized_product_definition
characterized_definition <-
property_definition.definition
property_definition
represented_definition = property_definition
represented_definition <-
property_definition_representation.definition
property_definition_representation
property_definition_representation.used_representation ->
{representation
representation.name = 'line segment characteristics'}
representation
representation.items[i] ->
{representation_item
representation_item.name = 'elevation'}
representation_item =>
measure_representation_item <=
{measure_with_unit =>
length_measure_with_unit}
measure_with_unit
[measure_with_unit.value_component]
[measure_with_unit.unit_component]

© ISO 2001 – All rights reserved

5.1.11.13.6 heat_tracing_type

AIM element: (heat_tracing_representation)
([heat_tracing_representation]
[document_usage_constraint.subject_element_value])

Source: 227

Reference path: plant_line_segment_definition <=
product_definition
characterized_product_definition = product_definition
characterized_product_definition
characterized_definition = characterized_product_definition
characterized_definition <-
property_definition.definition
property_definition
represented_definition = property_definition
represented_definition <-
property_definition_representation.definition
property_definition_representation
property_definition_representation.used_representation ->
{representation
representation.items[i] ->
representation_item =>
descriptive_representation_item}
representation =>
(heat_tracing_representation)
([heat_tracing_representation]
[heat_tracing_representation
document_item = heat_tracing_representation
document_item <-
applied_document_reference.items[i]
applied_document_reference <=
document_reference
document_reference.assigned_document ->
document <-
document_usage_constraint
document_usage_constraint.subject_element_value])
41

5.1.11.13.7 line_size

AIM element: shape_dimension_representation

Source: 47

Rules: subtype_mandatory_shape_representation

Reference path: plant_line_segment_definition <=
product_definition
characterized_product_definition = product_definition
characterized_product_definition
characterized_definition = characterized_product_definition
characterized_definition <-

© ISO 2001 – All rights reserved

property_definition.definition
{property_definition =>
product_definition_shape}
property_definition
represented_definition = property_definition
represented_definition <-
property_definition_representation.definition
{property_definition_representation =>
shape_definition_representation}
property_definition_representation
property_definition_representation.used_representation ->
{representation
representation.items[i] ->
representation_item
representation_item.name = 'line size'}
representation =>
shape_representation =>
shape_dimension_representation

5.1.11.13.8 segment_id

AIM element: product_definition.id

Source: 41

Reference path: plant_line_segment_definition <=
product_definition
product_definition.id

5.1.11.13.9 piping_system_line_segment to changed_piping_system_line_-segment

AIM element: IDENTICAL MAPPING

5.1.11.13.10 piping_system_line_segment to line_branch_connection

AIM element: PATH

Reference path: plant_line_segment_definition <=
product_definition
characterized_product_definition = product_definition
characterized_product_definition
characterized_definition = characterized_product_definition
characterized_definition <-
property_definition.definition
property_definition =>
product_definition_shape <-
shape_aspect.of_shape
shape_aspect <-
shape_aspect_relationship.relating_shape_aspect
shape_aspect_relationship =>

© ISO 2001 – All rights reserved

line_branch_connection

5.1.11.13.11 piping_system_line_segment to line_plant_item_ranch_-connection

AIM element: PATH

Reference path: plant_line_segment_definition <=
product_definition
characterized_product_definition = product_definition
characterized_product_definition
characterized_definition = characterized_product_definition
characterized_definition <-
property_definition.definition
property_definition =>
product_definition_shape <-
shape_aspect.of_shape
shape_aspect <-
shape_aspect_relationship.relating_shape_aspect
shape_aspect_relationship =>
line_plant_item_branch_connection

5.1.11.13.12 piping_system_line_segment to line_piping_system_-component_assignment

AIM element: PATH

Reference path: plant_line_segment_definition <=
product_definition <-
product_definition_relationship.relating_product_definition
product_definition_relationship

5.1.11.13.13 piping_system_line_segment to piping_system_line_segment_-termination

AIM element: PATH

Reference path: plant_line_segment_definition <=
product_definition
characterized_product_definition = product_definition
characterized_product_definition
characterized_definition = characterized_product_definition
characterized_definition <-
property_definition.definition
property_definition =>
product_definition_shape <-
shape_aspect.of_shape
shape_aspect =>
plant_line_segment_termination

© ISO 2001 – All rights reserved

5.1.11.13.14 piping_system_line_segment to segment_insulation

AIM element: PATH

Reference path: plant_line_segment_definition <=
product_definition <-
product_definition_relationship.relating_product_definition
product_definition_relationship
{product_definition_relationship
product_definition_relationship.name = 'segment insulation'}

5.1.11.13.15 piping_system_line_segment to stream_design_case

AIM element: PATH

Reference path: plant_line_segment_definition <=
product_definition
characterized_product_definition = product_definition
characterized_product_definition
characterized_definition = characterized_product_definition
characterized_definition <-
property_definition.definition
property_definition =>
stream_design_case

5.1.11.14 Piping_system_line_segment_termination

AIM element: plant_line_segment_termination

Source: 227

Reference path: plant_line_segment_termination <=
shape_aspect
{[shape_aspect
shape_aspect.name = 'piping line segment termination']
[shape_aspect <-
(shape_aspect_relationship.relating_shape_aspect)
(shape_aspect_relationship.related_shape_aspect)
shape_aspect_relationship =>
(line_branch_connection)
(line_plant_item_connection)
(line_termination_connection)]
[shape_aspect
shape_aspect.of_shape ->
product_definition_shape <=
property_definition
property_definition.definition ->
characterized_definition
characterized_definition = characterized_product_definition
characterized_product_definition
characterized_product_definition = product_definition
{product_definition =>
plant_line_segment_definition}

© ISO 2001 – All rights reserved

product_definition
product_definition.frame_of_reference ->
product_definition_context <=
application_context_element
application_context_element.name = 'functional definition']}

5.1.11.14.1 flow_direction

AIM element: descriptive_representation_item.description

Source: 45

Reference path: plant_line_segment_termination <=
shape_aspect
shape_definition = shape_aspect
shape_definition
characterized_definition = shape_definition
characterized_definition <-
property_definition.definition
property_definition
represented_definition = property_definition
represented_definition <-
property_definition_representation.definition
property_definition_representation
property_definition_representation.used_representation ->
representation
representation.items[i] ->
{representation_item
representation_item.name = 'flow direction'}
representation_item =>
descriptive_representation_item
descriptive_representation_item.description
{(descriptive_representation_item.description = 'both')
(descriptive_representation_item.description = 'in')
(descriptive_representation_item.description = 'not specified')
(descriptive_representation_item.description = 'out')}

5.1.11.14.2 line_end_location

AIM element: (point)
(shape_aspect)

Source: 41, 42

Reference path: plant_line_segment_termination <=
(shape_aspect
shape_definition = shape_aspect
shape_definition
characterized_definition = shape_definition
characterized_definition <-
property_definition.definition
property_definition
represented_definition = property_definition

© ISO 2001 – All rights reserved

represented_definition <-
property_definition_representation.definition
property_definition_representation
property_definition_representation.used_representation ->
representation
representation.items[i] ->
{representation_item
representation_item.name = 'line end point'}
representation_item =>
geometric_representation_item =>
point)
(shape_aspect <-
shape_aspect_relationship.relating_shape_aspect
shape_aspect_relationship
shape_aspect_relationship.related_shape_aspect ->
{shape_aspect
shape_aspect.name = 'line end location'}
shape_aspect)

5.1.11.14.3 line_start_location

AIM element: (point)
(shape_aspect)

Source: 41, 42

Reference path: plant_line_segment_termination <=
(shape_aspect
shape_definition = shape_aspect
shape_definition
characterized_definition = shape_definition
characterized_definition <-
property_definition.definition
property_definition
represented_definition = property_definition
represented_definition <-
property_definition_representation.definition
property_definition_representation
property_definition_representation.used_representation ->
representation
representation.items[i] ->
{representation_item
representation_item.name = 'line start point'}
representation_item =>
geometric_representation_item =>
point)
(shape_aspect <-
shape_aspect_relationship.relating_shape_aspect
shape_aspect_relationship
shape_aspect_relationship.related_shape_aspect ->
{shape_aspect
shape_aspect.name = 'line start location'}
shape_aspect)

© ISO 2001 – All rights reserved

5.1.11.14.4 termination_id

AIM element: shape_aspect.name

Source: 41

Reference path: plant_line_segment_termination <=
shape_aspect
shape_aspect.name

5.1.11.14.5 piping_system_line_segment_termination to changed_piping_-system_line_segment_

AIM element: IDENTICAL MAPPINGtermination

5.1.11.15 Piping_system_line_termination

AIM element: plant_line_segment_termination

Source: 227

Reference path: plant_line_segment_termination <=
shape_aspect
{[shape_aspect
shape_aspect.name = 'piping line termination']
[shape_aspect
shape_aspect.of_shape ->
product_definition_shape <=
property_definition
property_definition.definition ->
characterized_definition
characterized_definition = characterized_product_definition
characterized_product_definition
characterized_product_definition = product_definition_relationship
product_definition_relationship
[product_definition_relationship.related_product_defintion ->
{product_definition =>
plant_line_segment_definition}
product_definition
product_definition.frame_of_reference ->
product_definition_context <=
application_context_element
application_context_element.name = 'functional definition']
[product_definition_relationship.relating_product_defintion ->
{product_definition =>
product_definition_with_associated_documents =>
plant_line_definition}
product_definition
product_definition.frame_of_reference ->
product_definition_context <=
application_context_element
application_context_element.name = 'functional definition']]}

© ISO 2001 – All rights reserved

5.1.11.15.1 location

AIM element: cartesian_point

Source: 42

Reference path: plant_line_segment_termination <=
shape_aspect
represented_definition = shape_aspect
represented_definition <-
property_definition_representation.definition
property_definition_representation
property_definition_representation.used_representation ->
{representation
representation.name = 'plant line termination position'}
representation
representation.items[i] ->
representation_item =>
geometric_representation_item =>
point =>
cartesian_point

5.1.11.15.2 position_on_pipe

AIM element: descriptive_representation_item.description

Source: 45

Reference path: plant_line_segment_termination <=
shape_aspect
represented_definition = shape_aspect
represented_definition <-
property_definition_representation.definition
property_definition_representation
property_definition_representation.used_representation ->
{representation
representation.name = 'plant line termination position'}
representation
representation.items[i] ->
{representation_item
representation_item.name = 'position on pipe'}
representation_item =>
descriptive_representation_item
descriptive_representation_item.description

5.1.11.15.3 start_or_end

AIM element: descriptive_representation_item.description

Source: 45

Reference path: plant_line_segment_termination <=
shape_aspect

© ISO 2001 – All rights reserved

represented_definition = shape_aspect
represented_definition <-
property_definition_representation.definition
property_definition_representation
property_definition_representation.used_representation ->
{representation
representation.name = 'plant line termination position'}
representation
representation.items[i] ->
{representation_item
representation_item.name = 'start or end'}
representation_item =>
descriptive_representation_item
descriptive_representation_item.description
{(descriptive_representation_item.description = 'start')
(descriptive_representation_item.description = 'end')}

5.1.11.15.4 piping_system_line_termination to piping_system_line

AIM element: PATH

Reference path: plant_line_segment_termination <=
shape_aspect
shape_aspect.of_shape ->
product_definition_shape <=
property_definition
property_definition.definition ->
characterized_definition
characterized_definition = characterized_product_definition
characterized_product_definition
characterized_product_definition = product_definition_relationship
product_definition_relationship
product_definition_relationship.relating_product_defintion ->
{product_definition
product_definition.frame_of_reference ->
product_definition_context <=
application_context_element
application_context_element.name = 'functional definition'}
product_definition =>
product_definition_with_associated_documents =>
plant_line_definition

5.1.11.16 Segment_insulation

AIM element: product_definition_relationship

Source: 41

Reference path: {product_definition_relationship
[product_definition_relationship.name = 'segment insulation']
[product_definition_relationship.relating_product_definition ->
product_definition =>

© ISO 2001 – All rights reserved

plant_line_segment_definition]}

5.1.11.16.1 boundaries

AIM element: descriptive_representation_item.description

Source: 45

Reference path: product_definition_relationship
characterized_product_definition = product_definition_relationship
characterized_product_definition
characterized_definition = characterized_product_definition
characterized_definition <-
property_definition.definition
{property_definition =>
product_definition_shape}
property_definition
represented_definition = property_definition
represented_definition <-
property_definition_representation.definition
{property_definition_representation =>
shape_definition_representation}
property_definition_representation
property_definition_representation.used_representation ->
{representation
representation.name = 'segment insulation characteristics'}
representation
representation.items[i] ->
{representation_item
representation_item.name = 'segment insulation boundary'}
representation_item <=
descriptive_representation_item
descriptive_representation_item.description

5.1.11.16.2 description

AIM element: product_definition_relationship.description

Source: 41

5.1.11.16.3 thickness

AIM element: [measure_with_unit.value_component]
[measure_with_unit.unit_component]

Source: 41

Reference path: product_definition_relationship
characterized_product_definition = product_definition_relationship
characterized_product_definition
characterized_definition = characterized_product_definition
characterized_definition <-
property_definition.definition

© ISO 2001 – All rights reserved

{property_definition =>
product_definition_shape}
property_definition
represented_definition = property_definition
represented_definition <-
property_definition_representation.definition
{property_definition_representation =>
shape_definition_representation}
property_definition_representation
property_definition_representation.used_representation ->
{representation
representation.name = 'segment insulation characteristics'}
representation
(representation.items[i] ->
{representation_item
(representation_item.name = 'thickness')
(representation_item.name = 'maximum thickness')
(representation_item.name = 'minimum thickness')})
([representation.items[i] ->
{representation_item
representation_item.name = 'maximum thickness'}]
[representation.items[i] ->
{representation_item
representation_item.name = 'minimum thickness'}])
representation_item =>
measure_representation_item <=
{measure_with_unit =>
length_measure_with_unit}
measure_with_unit
[measure_with_unit.value_component]
[measure_with_unit.unit_component]

5.1.11.16.4 type

AIM element: product.name

Source: 41

Reference path: product_definition_relationship
product_definition_relationship.related_product_definition ->
product_definition
product_definition.formation ->
product_definition_formation
product_definition_formation.of_product ->
product
product.name

5.1.11.17 Stream_design_case

AIM element: stream_design_case

Source: 227

© ISO 2001 – All rights reserved

Reference path: stream_design_case <=
[characterized_object]
[property_definition]

5.1.11.17.1 description

AIM element: characterized_object.description

Source: 41

Rules: subtype_exclusive_characterized_object

Reference path: stream_design_case <=
characterized_object
characterized_object.description

5.1.11.17.2 flow_rate

AIM element: [measure_with_unit.value_component]
[measure_with_unit.unit_component]

Source: 41

Reference path: stream_design_case <=
property_definition
represented_definition = property_definition
represented_definition <-
property_definition_representation.definition
property_definition_representation
property_definition_representation.used_representation ->
{representation
representation.name = 'stream flow characteristics'}
representation
(representation.items[i] ->
{representation_item
(representation_item.name = 'flow rate')
(representation_item.name = 'maximum flow rate')
(representation_item.name = 'minimum flow rate')})
([representation.items[i] ->
{representation_item
representation_item.name = 'maximum flow rate'}]
[representation.items[i] ->
{representation_item
representation_item.name = 'minimum flow rate'}])
representation_item =>
measure_representation_item <=
measure_with_unit
[measure_with_unit.value_component]
[measure_with_unit.unit_component]

© ISO 2001 – All rights reserved

5.1.11.17.3 pressure

AIM element: [measure_with_unit.value_component]
[measure_with_unit.unit_component]

Source: 41

Reference path: stream_design_case <=
property_definition
represented_definition = property_definition
represented_definition <-
property_definition_representation.definition
property_definition_representation
property_definition_representation.used_representation ->
{representation
representation.name = 'stream flow characteristics'}
representation
(representation.items[i] ->
{representation_item
(representation_item.name = 'pressure')
(representation_item.name = 'maximum pressure')
(representation_item.name = 'minimum pressure')})
([representation.items[i] ->
{representation_item
representation_item.name = 'maximum pressure'}]
[representation.items[i] ->
{representation_item
representation_item.name = 'minimum pressure'}])
representation_item =>
measure_representation_item <=
measure_with_unit
[{measure_with_unit.value_component ->
measure_value
measure_value = ratio_measure}
measure_with_unit.value_component]
[{measure_with_unit.unit_component ->
unit
unit = derived_unit}
measure_with_unit.unit_component]

5.1.11.17.4 stream_case_type

AIM element: property_definition.name

Source: 41

Reference path: stream_design_case <=
property_definition
property_definition.name

© ISO 2001 – All rights reserved

5.1.11.17.5 stream_data_reference

AIM element: (descriptive_representation_item.description)
([descriptive_representation_item.description]
[document_usage_constraint.subject_element_value])

Source: 41, 45

Reference path: stream_design_case <=
property_definition
represented_definition = property_definition
represented_definition <-
property_definition_representation.definition
property_definition_representation
property_definition_representation.used_representation ->
{representation
representation.name = 'stream flow characteristics'}
representation
representation.items[i] ->
{representation_item
representation_item.name = 'stream data reference'}
(representation_item =>
descriptive_representation_item
descriptive_representation_item.description)
([representation_item =>
descriptive_representation_item
descriptive_representation_item.description]
[representation_item
document_item = representation_item
document_item <-
applied_document_reference.items[i]
applied_document_reference <=
document_reference
document_reference.assigned_document ->
document <-
document_usage_constraint
document_usage_constraint.subject_element_value])

5.1.11.17.6 stream_design_id

AIM element: characterized_object.name

Source: 41

Rules: subtype_exclusive_characterized_object

Reference path: stream_design_case <=
characterized_object
characterized_object.name

5.1.11.17.7 stream_design_case to service_operating_case

© ISO 2001 – All rights reserved

AIM element: PATH

Reference path: stream_design_case <=
property_definition <-
property_definition_relationship.relating_property_definition
property_definition_relationship

5.1.11.17.8 stream_design_case to stream_phase

AIM element: PATH

Rules: subtype_exclusive_characterized_object

Reference path: stream_design_case <=
characterized_object
characterized_definition = characterized_object
characterized_definition <-
property_definition.definition
property_definition =>
stream_phase

5.1.11.18 Stream_phase

AIM element: stream_phase

Source: 227

Reference path: stream_phase <=
property_definition

5.1.11.18.1 constituent_mole_fraction

AIM element: [measure_with_unit.value_component]
[measure_with_unit.unit_component]

Source: 41

Reference path: stream_phase <=
property_definition
represented_definition = property_definition
represented_definition <-
property_definition_representation.definition
property_definition_representation
property_definition_representation.used_representation ->
{representation
representation.name = 'stream phase characteristics'}
representation
representation.items[i] ->
{representation_item
representation_item.name = 'constituent mole fraction'}
representation_item =>
measure_representation_item <=
{measure_with_unit =>

© ISO 2001 – All rights reserved

ratio_measure_with_unit}
measure_with_unit
[measure_with_unit.value_component]
[measure_with_unit.unit_component]

5.1.11.18.2 constituents

AIM element: descriptive_representation_item.description

Source: 45

Reference path: stream_phase <=
property_definition
represented_definition = property_definition
represented_definition <-
property_definition_representation.definition
property_definition_representation
property_definition_representation.used_representation ->
{representation
representation.name = 'stream phase characteristics'}
representation
representation.items[i] ->
{representation_item
representation_item.name = 'constituents'}
representation_item =>
descriptive_representation_item
descriptive_representation_item.description

5.1.11.18.3 phase_density

AIM element: [measure_with_unit.value_component]
[measure_with_unit.unit_component]

Source: 41

Reference path: stream_phase <=
property_definition
represented_definition = property_definition
represented_definition <-
property_definition_representation.definition
property_definition_representation
property_definition_representation.used_representation ->
{representation
representation.name = 'stream phase characteristics'}
representation
representation.items[i] ->
{representation_item
representation_item.name = 'phase density'}
representation_item =>
measure_representation_item <=
measure_with_unit
[measure_with_unit.value_component]

© ISO 2001 – All rights reserved

[measure_with_unit.unit_component]

5.1.11.18.4 phase_fraction

AIM element: [measure_with_unit.value_component]
[measure_with_unit.unit_component]

Source: 41

Reference path: stream_phase <=
property_definition
represented_definition = property_definition
represented_definition <-
property_definition_representation.definition
property_definition_representation
property_definition_representation.used_representation ->
{representation
representation.name = 'stream phase characteristics'}
representation
representation.items[i] ->
{representation_item
representation_item.name = 'phase fraction'}
representation_item =>
measure_representation_item <=
{measure_with_unit =>
ratio_measure_with_unit}
measure_with_unit
[measure_with_unit.value_component]
[measure_with_unit.unit_component]

5.1.11.18.5 specific_gravity

AIM element: [measure_with_unit.value_component]
[measure_with_unit.unit_component]

Source: 41

Reference path: stream_phase <=
property_definition
represented_definition = property_definition
represented_definition <-
property_definition_representation.definition
property_definition_representation
property_definition_representation.used_representation ->
{representation
representation.name = 'stream phase characteristics'}
representation
representation.items[i] ->
{representation_item
representation_item.name = 'specific gravity'}
representation_item =>
measure_representation_item <=
measure_with_unit

© ISO 2001 – All rights reserved

[measure_with_unit.value_component]
[measure_with_unit.unit_component]

5.1.11.18.6 surface_tension

AIM element: [measure_with_unit.value_component]
[measure_with_unit.unit_component]

Source: 41

Reference path: stream_phase <=
property_definition
represented_definition = property_definition
represented_definition <-
property_definition_representation.definition
property_definition_representation
property_definition_representation.used_representation ->
{representation
representation.name = 'stream phase characteristics'}
representation
representation.items[i] ->
{representation_item
representation_item.name = 'surface tension'}
representation_item =>
measure_representation_item <=
measure_with_unit
[measure_with_unit.value_component]
[measure_with_unit.unit_component]

5.1.11.18.7 temperature

AIM element: [measure_with_unit.value_component]
[measure_with_unit.unit_component]

Source: 41

Reference path: stream_phase <=
property_definition
represented_definition = property_definition
represented_definition <-
property_definition_representation.definition
property_definition_representation
property_definition_representation.used_representation ->
{representation
representation.name = 'stream phase characteristics'}
representation
(representation.items[i] ->
{representation_item
(representation_item.name = 'temperature')
(representation_item.name = 'maximum temperature')
(representation_item.name = 'minimum temperature')})
([representation.items[i] ->
{representation_item

© ISO 2001 – All rights reserved

representation_item.name = 'maximum temperature'}]
[representation.items[i] ->
{representation_item
representation_item.name = 'minimum temperature'}])
representation_item =>
measure_representation_item <=
{measure_with_unit =>
thermodynamic_temperature_measure_with_unit}
measure_with_unit
[measure_with_unit.value_component]
[measure_with_unit.unit_component]

5.1.11.18.8 viscosity

AIM element: [measure_with_unit.value_component]
[measure_with_unit.unit_component]

Source: 41

Reference path: stream_phase <=
property_definition
represented_definition = property_definition
represented_definition <-
property_definition_representation.definition
property_definition_representation
property_definition_representation.used_representation ->
{representation
representation.name = 'stream phase characteristics'}
representation
representation.items[i] ->
{representation_item
representation_item.name = 'viscosity'}
representation_item =>
measure_representation_item <=
measure_with_unit
[measure_with_unit.value_component]
[measure_with_unit.unit_component]

5.1.12 Plant_characterization UoF

5.1.12.1 Cableway_system

AIM element: cableway_system

Source: 227

Rules: dependent_instantiable_product_context
product_context_discipline_type_constraint
value_for_application_context

Reference path: cableway_system <=
product_definition

© ISO 2001 – All rights reserved

{product_definition
product_definition.formation ->
product_definition_formation
product_definition_formation.of_product ->
product
product.frame_of_reference[i] ->
product_context<=
application_context_element
application_context_element.name = 'plant system'}

5.1.12.2 Ducting_system

AIM element: ducting_system

Source: 227

Rules: dependent_instantiable_product_context
product_context_discipline_type_constraint
value_for_application_context

Reference path: ducting_system <=
product_definition
{product_definition
product_definition.formation ->
product_definition_formation
product_definition_formation.of_product ->
product
product.frame_of_reference[i] ->
product_context<=
application_context_element
application_context_element.name = 'plant system'}

5.1.12.2.1 type

AIM element: group.name

Source: 41

Reference path: ducting_system
classification_item = ducting_system
classification_item <-
applied_classification_assignment.items[i]
applied_classification_assignment <=
{classification_assignment
classification_assignment.role ->
classification_role
classification_role.name = 'ducting system type classification'}
classification_assignment
classification_assignment.assigned_classification ->
{group =>
system_class}
group

© ISO 2001 – All rights reserved

group.name

5.1.12.2.2 ducting_system to stream_design_case

AIM element: PATH

Reference path: ducting_system <=
product_definition
characterized_product_definition = product_definition
characterized_product_definition
characterized_definition = characterized_product_definition
characterized_definition <-
property_definition.definition
property_definition =>
stream_design_case

5.1.12.3 Electrical_system

AIM element: electrical_system

Source: 227

Rules: dependent_instantiable_product_context
product_context_discipline_type_constraint
value_for_application_context

Reference path: electrical_system <=
product_definition
{product_definition
product_definition.formation ->
product_definition_formation
product_definition_formation.of_product ->
product
product.frame_of_reference[i] ->
product_context<=
application_context_element
application_context_element.name = 'plant system'}

5.1.12.3.1 system_voltage_designation

AIM element: representation

Source: 43

Reference path: electrical_system <=
product_definition
characterized_product_definition = product_definition
characterized_product_definition
characterized_definition = characterized_product_definition
characterized_definition <-
property_definition.definition
property_definition
represented_definition = property_definition

© ISO 2001 – All rights reserved

represented_definition <-
property_definition_representation.definition
property_definition_representation
property_definition_representation.used_representation ->
representation
{representation
[representation.name = 'system voltage designation']
[representation.items[i] ->
representation_item =>
measure_representation_item <=
measure_with_unit =>
electric_current_measure_with_unit]}

5.1.12.3.2 type

AIM element: group.name

Source: 41

Reference path: electrical_system
classification_item = electrical_system
classification_item <-
applied_classification_assignment.items[i]
applied_classification_assignment <=
{classification_assignment
classification_assignment.role ->
classification_role
classification_role.name = 'electrical system type classification'}
classification_assignment
classification_assignment.assigned_classification ->
{group =>
system_class}
group
group.name

5.1.12.4 External_classification

AIM element: externally_defined_class

Source: 227

Reference path: externally_defined_class <=
[group]
[externally_defined_item]

5.1.12.4.1 description

AIM element: group.description

Source: 41

Reference path: externally_defined_class <=

© ISO 2001 – All rights reserved

group
group.description

5.1.12.4.2 name

AIM element: group.name

Source: 41

Reference path: externally_defined_class <=
group
group.name

5.1.12.4.3 source

AIM element: external_source.source_id

Source: 41

Reference path: externally_defined_class <=
externally_defined_item
externally_defined_item.source ->
(external_source)
(external_source =>
known_source)
external_source.source_id

5.1.12.5 Functional_plant

AIM element: product_definition

Source: 41

Reference path: {product_definition
[product_definition.formation ->
product_definition_formation
product_definition_formation.of_product ->
product =>
plant]
[product_definition.frame_of_reference ->
[product_definition_context <=
application_context_element
application_context_element.name = 'functional occurrence']
[product_definition_context
product_definition_context.life_cycle_stage = 'functional design']]}

5.1.12.5.1 functional_plant to functional_plant_satisfaction

AIM element: PATH

Reference path: product_definition <-
product_definition_relationship.relating_product_definition

© ISO 2001 – All rights reserved

product_definition_relationship
{product_definition_relationship
product_definition_relationship.name = 'plant satisfaction'}

5.1.12.5.2 functional_plant to plant_system

AIM element: PATH

Reference path: product_definition <-
product_definition_relationship.relating_product_definition
product_definition_relationship
product_definition_relationship.related_product_definition ->
product_definition =>
(electrical_system)
(ducting_system)
(instrumentation_and_control_system)
(piping_system)
(structural_system)
(cableway_system)

5.1.12.6 Functional_plant_satisfaction

AIM element: product_definition_relationship

Source: 41

Reference path: {product_definition_relationship
product_definition_relationship.name = 'plant satisfaction'}

5.1.12.7 Hvac_system

AIM element: hvac_system

Source: 227

Rules: dependent_instantiable_product_context
product_context_discipline_type_constraint
value_for_application_context

Reference path: hvac_system <=
product_definition
{product_definition
product_definition.formation ->
product_definition_formation
product_definition_formation.of_product ->
product
product.frame_of_reference[i] ->
product_context<=
application_context_element
application_context_element.name = 'plant system'}

© ISO 2001 – All rights reserved

5.1.12.8 Instrumentation_and_control_system

AIM element: instrumentation_and_control_system

Source: 227

Rules: dependent_instantiable_product_context
product_context_discipline_type_constraint
value_for_application_context

Reference path: instrumentation_and_control_system <=
product_definition
{product_definition
product_definition.formation ->
product_definition_formation
product_definition_formation.of_product ->
product
product.frame_of_reference[i] ->
product_context<=
application_context_element
application_context_element.name = 'plant system'}

5.1.12.8.1 type

AIM element: group.name

Source: 41

Reference path: instrumentation_and_control_system
classification_item = instrumentation_and_control_system
classification_item <-
applied_classification_assignment.items[i]
applied_classification_assignment <=
{classification_assignment
classification_assignment.role ->
classification_role
classification_role.name = 'instrumentation and control system type \ classification'}
classification_assignment
classification_assignment.assigned_classification ->
{group =>
system_class}
group
group.name

5.1.12.9 Line_less_piping_system

AIM element: line_less_piping_system

Source: 227

Rules: dependent_instantiable_product_context
product_context_discipline_type_constraint
value_for_application_context

© ISO 2001 – All rights reserved

Reference path: line_less_piping_system <=
product_definition
{product_definition
product_definition.formation ->
product_definition_formation
product_definition_formation.of_product ->
product
product.frame_of_reference[i] ->
product_context<=
application_context_element
application_context_element.name = 'plant system'}

5.1.12.9.1 line_less_piping_system to piping_system_component

AIM element: PATH

Reference path: line_less_piping_system <=
product_definition <-
product_definition_relationship.relating_product_definition
{product_definition_relationship =>
product_definition_usage =>
assembly_component_usage}
product_definition_relationship
product_definition_relationship.related_product_definition ->
product_definition =>
piping_component_definition

5.1.12.9.2 line_less_piping_system to stream_design_case

AIM element: PATH

Reference path: line_less_piping_system <=
product_definition
characterized_product_definition = product_definition
characterized_product_definition
characterized_definition = characterized_product_definition
characterized_definition <-
property_definition.definition
property_definition =>
stream_design_case

5.1.12.10 Location_in_plant

AIM element: (axis2_placement_2d)
(axis2_placement_3d)

Source: 42

Reference path: {(axis2_placement_2d <=)
(axis2_placement_3d <=)
placement <=
geometric_representation_item <=

© ISO 2001 – All rights reserved

representation_item <-
representation.items[i]
{representation =>
shape_representation}
representation <-
property_definition_representation.used_representation
{property_definition_representation =>
shape_definition_representation}
property_definition_representation
property_definition_representation.definition ->
represented_definition
represented_definition = property_definition
{property_definition =>
product_definition_shape}
property_definition
property_definition.definition ->
characterized_definition
characterized_definition = characterized_product_definition
characterized_product_definition
characterized_product_definition = product_definition
{product_definition
product_definition.frame_of_reference ->
product_definition_context <=
application_context_element
application_context_element.name = 'physical occurrence'}
product_definition
product_definition.formation ->
product_definition_formation
product_definition_formation.of_product ->
product =>
plant}

5.1.12.11 Manufacturing_line

AIM element: plant

Source: 227

Rules: dependent_instantiable_product_context
product_context_discipline_type_constraint
value_for_application_context

Reference path: plant <=
product
{product
product.frame_of_reference[i] ->
product_context <=
application_context_element
application_context_element.name = 'manufacturing line'}

5.1.12.12 Piping_system

© ISO 2001 – All rights reserved

AIM element: piping_system

Source: 227

Rules: dependent_instantiable_product_context
product_context_discipline_type_constraint
value_for_application_context

Reference path: piping_system <=
product_definition
{product_definition
product_definition.formation ->
product_definition_formation
product_definition_formation.of_product ->
product
product.frame_of_reference[i] ->
product_context<=
application_context_element
application_context_element.name = 'plant system'}

5.1.12.12.1 code

AIM element: document_usage_constraint.subject_element_value

Source: 41

Reference path: piping_system
document_item = piping_system
document_item <-
applied_document_reference.items[i]
applied_document_reference <=
document_reference
document_reference.assigned_document ->
document <-
document_usage_constraint.source
document_usage_constraint
document_usage_constraint.subject_element_value
{document_usage_constraint.subject_element = 'piping system code'}

5.1.12.12.2 description

AIM element: product_definition_formation.description

Source: 41

Reference path: piping_system <=
product_definition
product_definition.formation ->
product_definition_formation
product_definition_formation.description

© ISO 2001 – All rights reserved

5.1.12.12.3 approval_state

AIM element: approval_status.name

Source: 41

Reference path: piping_system
piping_system = approval_item
approval_item <-
applied_approval_assignment.items[i]
applied_approval_assignment <=
approval_assignment
approval_assignment.assigned_approval ->
approval
approval.status ->
approval_status
approval_status.name

5.1.12.12.4 piping_system to piping_system_line

AIM element: PATH

Reference path: piping_system <=
product_definition <-
product_definition_relationship.relating_product_definition
product_definition_relationship
product_definition_relationship.related_product_definition ->
product_definition =>
product_definition_with_associated_documents =>
plant_line_definition

5.1.12.13 Planned_physical_plant

AIM element: product_definition

Source: 41

Reference path: {product_definition
[product_definition.formation ->
product_definition_formation
product_definition_formation.of_product ->
product =>
plant]
[product_definition.frame_of_reference ->
[product_definition_context <=
application_context_element
application_context_element.name = 'physical occurrence']
[product_definition_context
product_definition_context.life_cycle_stage = 'physical design']]}

5.1.12.13.1 planned_physical_plant to changed_planned_physical_plant

© ISO 2001 – All rights reserved

AIM element: IDENTICAL MAPPING

5.1.12.13.2 planned_physical_plant to functional_plant_satisfaction

AIM element: PATH

Reference path: product_definition <-
product_definition_relationship.related_product_definition
product_definition_relationship
{product_definition_relationship
product_definition_relationship.name = 'plant satisfaction'}

5.1.12.13.3 planned_physical_plant to location_in_plant

AIM element: PATH

Rules: subtype_mandatory_shape_representation

Reference path: product_definition
characterized_product_definition = product_definition
characterized_product_definition
characterized_definition = characterized_product_definition
characterized_definition <-
property_definition.definition
{property_definition =>
product_definition_shape}
property_definition
represented_definition = property_definition
represented_definition <-
property_definition_representation.definition
{property_definition_representation =>
shape_definition_representation}
property_definition_representation
property_definition_representation.used_representation ->
{representation =>
shape_representation}
representation
representation.items[i] ->
representation_item =>
geometric_representation_item =>
placement =>
(axis2_placement_2d)
(axis2_placement_3d)

5.1.12.13.4 planned_physical_plant to sited_plant

AIM element: PATH

Reference path: product_definition
characterized_product_definition = product_definition
characterized_product_definition
characterized_definition = characterized_product_definition
characterized_definition <-

© ISO 2001 – All rights reserved

property_definition.definition
property_definition =>
sited_plant

5.1.12.14 Plant

AIM element: plant

Source: 227

Reference path: plant <=
product
{product <-
product_definition_formation.of_product
product_definition_formation <-
product_definition.formation
product_definition
product_definition.frame_of_reference ->
product_definition_context
(product_definition_context.life_cycle_stage = 'physical design')
(product_definition_context.life_cycle_stage = 'functional design')}

5.1.12.14.1 definition_coordinate_system

AIM element: representation_context.context_identifier

Source: 43

Reference path: plant <=
product <-
product_definition_formation.of_product
product_definition_formation <-
product_definition.formation
product_definition
characterized_product_definition = product_definition
characterized_product_definition
characterized_definition = characterized_product_definition
characterized_definition <-
property_definition.definition
property_definition
represented_definition = property_definition
represented_definition <-
property_definition_representation.definition
property_definition_representation
property_definition_representation.used_representation ->
{representation
representation.items[i] ->
[representation_item
representation_item.name = 'plant placement reference']
[representation_item =>
geometric_representation_item =>
placement =>
((axis2_placment_2d

© ISO 2001 – All rights reserved

axis2_placement_2d.ref_direction ->
direction <=
geometric_representation_item <=
representation_item
(representation_item.name = 'plant north')
(representation_item.name = 'forward perpendicular')
(representation_item.name = 'aft perpendicular'))
(axis2_placement_2d))
((axis2_placment_3d
axis2_placement_3d.axis ->
direction <=
geometric_representation_item <=
representation_item
(representation_item.name = 'plant north')
(representation_item.name = 'forward perpendicular')
(representation_item.name = 'aft perpendicular'))
(axis2_placement_3d.ref_direction ->
direction <=
geometric_representation_item <=
representation_item
(representation_item.name = 'plant north')
(representation_item.name = 'forward perpendicular')
(representation_item.name = 'aft perpendicular'))
(axis2_placement_3d))]}
representation
representation.context_of_items ->
{representation_context =>
geometric_representation_context}
representation_context
representation_context.context_identifier

5.1.12.14.2 description

AIM element: product.description

Source: 41

Reference path: plant <=
product
product.description

5.1.12.14.3 name

AIM element: product.name

Source: 41

Reference path: plant <=
product
product.name

© ISO 2001 – All rights reserved

5.1.12.14.4 operator

AIM element: (organization)
(person_and_organization)

Source: 41

Reference path: plant
(plant_spatial_configuration_organization_item = plant
plant_spatial_configuration_organization_item <-
plant_spatial_configuration_organization_assignment.items[i]
plant_spatial_configuration_organization_assignment <=
{organization_assignment
organization_assignment.role ->
organization_role
organization_role.name = 'plant operator'}
organization_assignment
organization_assignment.assigned_organization ->
organization)
(plant_spatial_configuration_person_and_organization_item = plant
plant_spatial_configuration_person_and_organization_item <-
plant_spatial_configuration_person_and_organization_assignment.items[i]
plant_spatial_configuration_person_and_organization_assignment <=
{person_and_organization_assignment
person_and_organization_assignment.role ->
person_and_organization_role
person_and_organization_role.name = 'plant operator'}
person_and_organization_assignment
person_and_organization_assignment.assigned_person_and_organization ->
person_and_organization)

5.1.12.14.5 owners

AIM element: (person)
(organization)
(person_and_organization)

Source: 41

Reference path: plant
(plant_spatial_configuration_person_item = plant
plant_spatial_configuration_person_item <-
plant_spatial_configuration_person_assignment.items[i]
plant_spatial_configuration_person_assignment <=
{person_assignment
person_assignment.role ->
person_role
person_role.name = 'plant owner'}
person_assignment
person_assignment.assigned_person ->
person)
(plant_spatial_configuration_organization_item = plant
plant_spatial_configuration_organization_item <-
plant_spatial_configuration_organization_assignment.items[i]

© ISO 2001 – All rights reserved

plant_spatial_configuration_organization_assignment <=
{organization_assignment
organization_assignment.role ->
organization_role
organization_role.name = 'plant owner'}
organization_assignment
organization_assignment.assigned_organization ->
organization)
(plant_spatial_configuration_person_and_organization_item = plant
plant_spatial_configuration_person_and_organization_item <-
plant_spatial_configuration_person_and_organization_assignment.items[i]
plant_spatial_configuration_person_and_organization_assignment <=
{person_and_organization_assignment
person_and_organization_assignment.role ->
person_and_organization_role
person_and_organization_role.name = 'plant owner'}
person_and_organization_assignment
person_and_organization_assignment.assigned_person_and_organization ->
person_and_organization)

5.1.12.14.6 plant_id

AIM element: product.id

Source: 41

Reference path: plant <=
product
product.id

5.1.12.14.7 length_between_perpendiculars

AIM element: [measure_with_unit.value_component]
[measure_with_unit.unit_component]

Source: 41

Reference path: plant <=
product <-
product_definition_formation.of_product
product_definition_formation <-
product_definition.formation
product_definition
characterized_product_definition = product_definition
characterized_product_definition
characterized_definition = characterized_product_definition
characterized_definition <-
property_definition.definition
property_definition <-
property_definition_representation.definition
property_definition_representation
property_definition_representation.using_representation ->
representation

© ISO 2001 – All rights reserved

representation.items[i] ->
representation_item =>
{representation_item.name = 'length between perpendiculars '}
measure_representation_item <=
{measure_with_unit =>
length_measure_with_unit}
measure_with_unit
[measure_with_unit.value_component]
[measure_with_unit.unit_component]

5.1.12.14.8 plant_type

AIM element: group.name

Source: 41

Reference path: product
classification_item = product
classification_item <-
applied_classification_assignment.items[i]
applied_classification_assignment <=
{classification_assignment
classification_assignment.role ->
classification_role
classification_role.name = 'plant type classification'}
classification_assignment
classification_assignment.assigned_classification ->
group
group.name

5.1.12.14.9 plant to changed_plant

AIM element: IDENTICAL MAPPING

5.1.12.14.10 plant to external_classification

AIM element: PATH

Reference path: plant <=
product
classification_item = product
classification_item <-
applied_classification_assignment.items[i]
applied_classification_assignment <=
classification_assignment
classification_assignment.assigned_classification ->
group =>
externally_defined_class

5.1.12.14.11 plant to functional_plant

© ISO 2001 – All rights reserved

AIM element: PATH

Rules: application_context_requires_ap_definition
dependent_instantiable_application_context
dependent_instantiable_product_definition_context
product_definition_context_name_constraint

Reference path: plant <=
product <-
product_definition_formation.of_product
product_definition_formation <-
product_definition.formation
product_definition
{product_definition
product_definition.frame_of_reference ->
product_definition_context <=
application_context_element
application_context_element.name = 'functional occurrence'}

5.1.12.14.12 plant to planned_physical_plant

AIM element: PATH

Rules: application_context_requires_ap_definition
dependent_instantiable_application_context
dependent_instantiable_product_definition_context
product_definition_context_name_constraint
product_definition_usage_constraint

Reference path: plant <=
product <-
product_definition_formation.of_product
product_definition_formation <-
product_definition.formation
product_definition
{product_definition
product_definition.frame_of_reference ->
product_definition_context <=
application_context_element
application_context_element.name = 'physical occurrence'}

5.1.12.14.13 plant to plant_process_capability

AIM element: PATH

Reference path: plant <=
product <-
product_definition_formation.of_product
product_definition_formation <-
product_definition.formation
product_definition
characterized_product_definition = product_definition
characterized_product_definition

© ISO 2001 – All rights reserved

characterized_definition = characterized_product_definition
characterized_definition <-
property_definition.definition
property_definition =>
process_capability

5.1.12.14.14 plant to sub_plant_relationship (contains)

AIM element: PATH

Reference path: plant <=
product <-
product_definition_formation.of_product
product_definition_formation <-
product_definition.formation
product_definition <-
product_definition_relationship.relating_product_definition
product_definition_relationship
{product_definition_relationship
product_definition_relationship.name = 'sub plant'}

5.1.12.14.15 plant to sub_plant_relationship (used in)

AIM element: PATH

Reference path: plant <=
product <-
product_definition_formation.of_product
product_definition_formation <-
product_definition.formation
product_definition <-
product_definition_relationship.related_product_definition
product_definition_relationship
{product_definition_relationship
product_definition_relationship.name = 'sub plant'}

5.1.12.15 Plant_process_capability

AIM element: process_capability

Source: 227

Reference path: process_capability <=
property_definition

5.1.12.15.1 plant_process_capability_id

AIM element: property_definition.name

Source: 41

Reference path: process_capability <=

© ISO 2001 – All rights reserved

property_definition
property_definition.name

5.1.12.15.2 production_capacity

AIM element: representation

Source: 43

Reference path: process_capability <=
property_definition
represented_definition = property_definition
represented_definition <-
property_definition_representation.definition
property_definition_representation
property_definition_representation.used_representation ->
representation
{representation
representation.name = 'production capacity'}

5.1.12.15.3 production_type

AIM element: descriptive_representation_item.description

Source: 45

Reference path: process_capability <=
property_definition
represented_definition = property_definition
represented_definition <-
property_definition_representation.definition
property_definition_representation
property_definition_representation.used_representation ->
{representation
representation.name = 'production capacity'}
representation
representation.items[i] ->
{representation_item
representation_item.name = 'production type'}
representation_item =>
descriptive_representation_item
descriptive_representation_item.description

5.1.12.15.4 plant_process_capability to changed_plant_process_capability

AIM element: IDENTICAL MAPPING

5.1.12.16 Plant_system

AIM element: (electrical_system)
(ducting_system)
(instrumentation_and_control_system)

© ISO 2001 – All rights reserved

(piping_system)
(structural_system)
(cableway_system)

Source: 227

Rules: dependent_instantiable_product_context
product_context_discipline_type_constraint
value_for_application_context

Reference path: (electrical_system <=)
(ducting_system <=)
(instrumentation_and_control_system <=)
(piping_system <=)
(structural_system <=)
(cableway_system <=)
product_definition
{product_definition
product_definition.formation ->
product_definition_formation
product_definition_formation.of_product ->
product
product.frame_of_reference[i] ->
product_context<=
application_context_element
application_context_element.name = 'plant system'}
227
227

5.1.12.16.1 name

AIM element: product_definition.description

Source: 41

Reference path: (electrical_system <=)
(ducting_system <=)
(instrumentation_and_control_system <=)
(piping_system <=)
(structural_system <=)
(cableway_system <=)
product_definition
product_definition.description

5.1.12.16.2 plant_system_id

AIM element: product_definition.id

Source: 41

Reference path: (electrical_system <=)
(ducting_system <=)
(instrumentation_and_control_system <=)

© ISO 2001 – All rights reserved

(piping_system <=)
(structural_system <=)
(cableway_system <=)
product_definition
product_definition.id

5.1.12.16.3 service_description

AIM element: property_definition.name

Source: 41

Reference path: (electrical_system <=)
(ducting_system <=)
(instrumentation_and_control_system <=)
(piping_system <=)
(structural_system <=)
(cableway_system <=)
product_definition
characterized_product_definition = product_definition
characterized_product_definition
characterized_definition = characterized_product_definition
characterized_definition <-
property_definition.definition
property_definition
property_definition.name

5.1.12.16.4 plant_system to changed_plant_system

AIM element: IDENTICAL MAPPING

5.1.12.16.5 plant_system to external_classification

AIM element: PATH

Reference path: (electrical_system
classification_item = electrical_system)
(ducting_system
classification_item = ducting_system)
(instrumentation_and_control_system
classification_item = instrumentation_and_control_system)
(piping_system
classification_item = piping_system)
(structural_system
classification_item = structural_system)
(cableway_system
classification_item = cableway_system)
classification_item <-
applied_classification_assignment.items[i]
applied_classification_assignment <=
classification_assignment
classification_assignment.assigned_classification ->

© ISO 2001 – All rights reserved

group =>
externally_defined_class

5.1.12.16.6 plant_system to plant_item

AIM element: PATH

Reference path: (electrical_system <=)
(ducting_system <=)
(instrumentation_and_control_system <=)
(piping_system <=)
(structural_system <=)
(cableway_system <=)
product_definition <-
product_definition_relationship.relating_product_definition
product_definition_relationship
product_definition_relationship.related_product_definition ->
(product_definition)
(product_definition =>
externally_defined_plant_item_definition)
(product_definition
product_definition.formation ->
product_definition_formation
product_definition_formation.of_product ->
product)

5.1.12.16.7 plant_system to plant_system_assembly (sub-system)

AIM element: PATH

Reference path: (electrical_system <=)
(ducting_system <=)
(instrumentation_and_control_system <=)
(piping_system <=)
(structural_system <=)
(cableway_system <=)
product_definition <-
product_definition_relationship.related_product_definition
product_definition_relationship
product_definition_relationship.relating_product_definition ->
product_definition
(electrical_system)
(ducting_system)
(instrumentation_and_control_system)
(piping_system)
(structural_system)
(cableway_system)

5.1.12.16.8 plant_system to plant_system_assembly (super-system)

AIM element: PATH

© ISO 2001 – All rights reserved

Reference path: (electrical_system <=)
(ducting_system <=)
(instrumentation_and_control_system <=)
(piping_system <=)
(structural_system <=)
(cableway_system <=)
product_definition <-
product_definition_relationship.relating_product_definition
product_definition_relationship
product_definition_relationship.related_product_definition ->
product_definition
(electrical_system)
(ducting_system)
(instrumentation_and_control_system)
(piping_system)
(structural_system)
(cableway_system)

5.1.12.17 Plant_system_assembly

AIM element: (electrical_system)
(ducting_system)
(instrumentation_and_control_system)
(piping_system)
(structural_system)
(cableway_system)

Source: 227

Reference path: (electrical_system <=)
(ducting_system <=)
(instrumentation_and_control_system <=)
(piping_system <=)
(structural_system <=)
(cableway_system <=)
product_definition
227
227

5.1.12.18 Structural_system

AIM element: structural_system

Source: 227

Rules: dependent_instantiable_product_context
product_context_discipline_type_constraint
value_for_application_context

Reference path: structural_system <=
product_definition
{product_definition
product_definition.formation ->

© ISO 2001 – All rights reserved

product_definition_formation
product_definition_formation.of_product ->
product
product.frame_of_reference[i] ->
product_context<=
application_context_element
application_context_element.name = 'plant system'}

5.1.12.18.1 type

AIM element: group.name

Source: 41

Reference path: structural_system
classification_item = structural_system
classification_item <-
applied_classification_assignment.items[i]
applied_classification_assignment <=
{classification_assignment
classification_assignment.role ->
classification_role
classification_role.name = 'structural system type classification'}
classification_assignment
classification_assignment.assigned_classification ->
{group =>
system_class}
group
group.name

5.1.12.19 Sub_plant_relationship

AIM element: product_definition_relationship

Source: 41

Reference path: {product_definition_relationship
product_definition_relationship.name = 'sub plant'}

5.1.12.19.1 location_and_orientation

AIM element: (axis2_placement_2d)
(axis2_placement_3d)

Source: 42

Rules: subtype_mandatory_shape_representation

Reference path: product_definition_relationship
characterized_product_definition = product_definition_relationship
characterized_product_definition
characterized_definition = characterized_product_definition
characterized_definition <-

© ISO 2001 – All rights reserved

property_definition.definition
{property_definition =>
product_definition_shape}
property_definition
represented_definition = property_definition
represented_definition <-
property_definition_representation.definition
property_definition_representation
property_definition_representation.used_representation ->
{representation =>
shape_representation}
representation
representation.items[i] ->
representation_item =>
geometric_representation_item =>
placement =>
(axis2_placement_2d)
(axis2_placement_3d)

5.1.12.19.2 sub_plant_relationship to changed_sub_plant_relationship

AIM element: IDENTICAL MAPPING

5.1.12.20 Train

AIM element: plant

Source: 227

Rules: dependent_instantiable_product_context
product_context_discipline_type_constraint
value_for_application_context

Reference path: plant <=
product
{product
product.frame_of_reference[i] ->
product_context <=
application_context_element
application_context_element.name = 'train'}

5.1.12.21 Unit

AIM element: plant

Source: 227

Rules: dependent_instantiable_product_context
product_context_discipline_type_constraint
value_for_application_context

Reference path: plant <=
product

© ISO 2001 – All rights reserved

{product
product.frame_of_reference[i] ->
product_context <=
application_context_element
application_context_element.name = 'unit'}

5.1.13 Plant_csg_shape_representation UoF

5.1.13.1 Block

AIM element: block

Source: 42

5.1.13.2 Circular_ellipsoid

AIM element: ellipsoid

Source: 42

5.1.13.3 Cone

AIM element: right_circular_cone

Source: 42

5.1.13.4 Csg_element

AIM element: (csg_primitive)
(boolean_result)
faceted_brep
(plant_design_csg_primative)

Source: 42, 227

5.1.13.5 Cylinder

AIM element: right_circular_cylinder

Source: 42

5.1.13.6 Eccentric_cone

AIM element:
eccentric_cone

Source: 42

© ISO 2001 – All rights reserved

5.1.13.7 Eccentric_cylinder

AIM element:
eccentric_cone

Source: 42

Reference path: {eccentric_cone
eccentric_cone.ratio = 1}

5.1.13.8 Eccentric_pyramid

AIM element: rectangular_pyramid

Source: 42

5.1.13.9 Extrusion

AIM element: extruded_area_solid

Source: 42

Reference path: {extruded_area_solid <=
swept_area_solid
swept_area_solid.swept_area ->
curve_bounded_surface
[curve_bounded_surface.basis_surface ->
surface =>
elementary_surface =>
plane]
[curve_bounded_surface.boundaries[i] ->
surface_boundary
surface_boundary = boundary_curve
boundary_curve <=
composite_curve_on_surface <=
composite_curve
composite_curve.segments[i] ->
composite_curve_segment
composite_curve_segment.parent_curve ->
surface_curve
surface_curve.curve_3d ->
curve =>
bounded_curve =>
trimmed_curve
trimmed_curve.basis_curve ->
curve =>
(line)
(conic)]}

5.1.13.10 Faceted_brep

AIM element: faceted_brep

© ISO 2001 – All rights reserved

Source: 42

5.1.13.11 Hemisphere

AIM element: plant_design_csg_primitive

Source: 227

Reference path: plant_design_csg_primitive <=
[{solid_model <=
geometric_representation_item <=
representation_item
representation_item.name = 'hemisphere'}
solid_model]
[{shape_representation <=
representation
representation.name = 'hemisphere'}
shape_representation]

5.1.13.12 Pyramid

AIM element: rectangular_pyramid

Source: 42

5.1.13.13 Reducing_torus

AIM element:
cyclide_segment_solid

Source: 42

5.1.13.14 Solid_of_revolution

AIM element: revolved_area_solid

Source: 42

Reference path: {revolved_area_solid <=
swept_area_solid
swept_area_solid.swept_area ->
curve_bounded_surface
curve_bounded_surface.boundaries[i] ->
surface_boundary
surface_boundary = boundary_curve
boundary_curve <=
composite_curve_on_surface <=
composite_curve
composite_curve.segments[i] ->
composite_curve_segment
composite_curve_segment.parent_curve ->
surface_curve

© ISO 2001 – All rights reserved

surface_curve.curve_3d ->
curve =>
bounded_curve =>
trimmed_curve
trimmed_curve.basis_curve ->
curve =>
(line)
(conic)}

5.1.13.15 Sphere

AIM element: sphere

Source: 42

5.1.13.16 Square_to_round

AIM element: plant_design_csg_primitive

Source: 42

Reference path: plant_design_csg_primitive <=
[{solid_model <=
geometric_representation_item <=
representation_item
representation_item.name = 'rectangle to ellipse'
solid_model]
[{shape_representation <=
representation
representation.name = 'rectangle to ellipse'}
shape_representation]

5.1.13.17 Torus

AIM element: torus

Source: 42

5.1.13.18 Trimmed_block

AIM element: plant_design_csg_primitive

Source: 227

Reference path: plant_design_csg_primitive <=
[{solid_model <=
geometric_representation_item <=
representation_item
representation_item.name = 'trimmed block'
solid_model]
[{shape_representation <=
representation

© ISO 2001 – All rights reserved

representation.name = 'trimmed block'}
shape_representation]

5.1.13.19 Trimmed_cone

AIM element: eccentric_cone

Source: 42

Reference path: {eccentric_cone
eccentric_cone.semi_axis_1 = eccentric_cone.semi_axis_2}

5.1.13.20 Trimmed_cylinder

AIM element: eccentric_cone

Source: 42

5.1.13.21 Trimmed_pyramid

AIM element: plant_design_csg_primitive

Source: 227

Reference path: plant_design_csg_primitive <=
[{solid_model <=
geometric_representation_item <=
representation_item
representation_item.name = 'trimmed pyramid'}
solid_model]
[{shape_representation <=
representation
representation.name = 'trimmed pyramid'}
shape_representation]

5.1.13.22 Trimmed_sphere

AIM element: plant_design_csg_primitive

Source: 227

Reference path: plant_design_csg_primitive <=
[{solid_model <=
geometric_representation_item <=
representation_item
representation_item.name = 'trimmed sphere'}
solid_model]
[{shape_representation <=
representation
representation.name = 'trimmed sphere'}
shape_representation]

© ISO 2001 – All rights reserved

5.1.13.23 Trimmed_torus

AIM element: cyclide_segment_solid

Source: 42

5.1.14 Plant_item_characterization UoF

5.1.14.1 Analysis_data_point

AIM element: shape_aspect

Source: 41

Reference path: {shape_aspect
shape_aspect.description = 'analysis data point'}

5.1.14.1.1 id

AIM element: identification_assignment.assigned_id

Source: 41

Reference path: identification_item = shape_aspect
identification_item <-
applied_identification_assignment.items[i]
applied_identification_assignment <=
identification_assignment
{identification_assignment.role ->
identification_role
identification_role.name = 'analysis data point id'}
identification_assignment.assigned_id

5.1.14.1.2 name

AIM element: shape_aspect.name

Source: 41

5.1.14.1.3 location

AIM element: (axis2_placement_2d)
(axis2_placement_3d)

Source: 42

Reference path: shape_aspect
shape_definition = shape_aspect
shape_definition
characterized_definition = shape_definition
characterized_definition <-
property_definition.definition

© ISO 2001 – All rights reserved

property_definition
represented_definition = property_definition
represented_definition <-
property_definition_representation.definition
property_definition_representation
property_definition_representation.used_representation ->
representation
representation.items[i] ->
{representation_item
representation_item.name = 'analysis data point location'}
representation_item =>
geometric_representation_item =>
placement =>
(axis2_placement_2d)
(axis2_placement_3d)

5.1.14.2 Bolt

AIM element: bolt_and_nut_component_definition

Source: 227

Rules: dependent_instantiable_product_context
product_context_discipline_type_constraint
value_for_application_context

Reference path: bolt_and_nut_component_definition <=
product_definition
{bolt_and_nut_component_definition
classification_item = piping_support_definition
classification_item <-
applied_classification_assignment.items[i]
applied_classification_assignment <=
classification_assignment
classification_assignment.assigned_classification ->
[group =>
bolt_and_nut_component_class]
[group
group.name = 'bolt']}
{product_definition
product_definition.formation ->
product_definition_formation
product_definition_formation.of_product ->
[product
classification_item = product
classification_item <-
applied_classification_assignment.items[i]
applied_classification_assignment <=
classification_assignment
classification_assignment.assigned_classification ->
(group)
(group <-
group_relationship.related_group
group_relationship

© ISO 2001 – All rights reserved

group_relationship.relating_group ->
group)
group.name = 'bolt and nut component']
[product
product.frame_of_reference[i] ->
product_context <=
application_context_element
application_context_element.name = 'plant item']})

5.1.14.2.1 bolt_type

AIM element: group.name

Source: 41

Reference path: bolt_and_nut_component_definition
classification_item = piping_support_definition
classification_item <-
applied_classification_assignment.items[i]
applied_classification_assignment <=
classification_assignment
classification_assignment.assigned_classification ->
group <-
{[group =>
bolt_and_nut_component_class]
[group
group.name = 'bolt']}
group_relationship.relating_group
group_relationship
{group_relationship.name = 'class hierarchy'}
group_relationship.related_group ->
group
{group =>
bolt_and_nut_component_class}
group.name

5.1.14.3 Clamp

AIM element: product

Source: 41

Rules: dependent_instantiable_product_context
product_context_discipline_type_constraint
value_for_application_context

Reference path: {[product
classification_item = product
classification_item <-
applied_classification_assignment.items[i]
applied_classification_assignment <=
classification_assignment
classification_assignment.assigned_classification ->

© ISO 2001 – All rights reserved

[group
group.name = 'clamp']
[group
group_relationship.related_group
group_relationship
{group_relationship.name = 'usage classification'}
group_relationship.relating_group ->
group
group.name = 'connection component']]
[product
product.frame_of_reference[i] ->
product_context <=
application_context_element
application_context_element.name = 'plant item']}

5.1.14.4 Bolt_and_nut_component

AIM element: product

Source: 41

Rules: dependent_instantiable_product_context
product_context_discipline_type_constraint
value_for_application_context

Reference path: {[product
classification_item = product
classification_item <-
applied_classification_assignment.items[i]
applied_classification_assignment <=
classification_assignment
classification_assignment.assigned_classification ->
[group
group.name = 'bolt and nut component']
[group
group_relationship.related_group
group_relationship
{group_relationship.name = 'usage classification'}
group_relationship.relating_group ->
group
group.name = 'connection component']]
[product
product.frame_of_reference[i] ->
product_context <=
application_context_element
application_context_element.name = 'plant item']}

5.1.14.4.1 nominal_size

AIM element: [measure_with_unit.value_component]
[measure_with_unit.unit_component]

© ISO 2001 – All rights reserved

Source: 41

Reference path: product <-
product_definition_formation.of_product
product_definition_formation <-
product_definition.formation
product_definition
characterized_product_definition = product_definition
characterized_product_definition
characterized_definition = characterized_product_definition
characterized_definition <-
property_definition.definition
property_definition <-
property_definition_representation.definition
property_definition_representation
property_definition_representation.using_representation ->
representation
{ representation.name = 'connection component size'}
representation
representation.items[i] ->
representation_item =>
{representation_item.name = 'nominal size'}
measure_representation_item <=
{measure_with_unit =>
length_measure_with_unit}
measure_with_unit
[measure_with_unit.value_component]
[measure_with_unit.unit_component]

5.1.14.4.2 quantity

AIM element: [measure_with_unit.value_component]
[measure_with_unit.unit_component]

Source: 41

Reference path: product <-
product_definition_formation.of_product
product_definition_formation <-
product_definition.formation
product_definition
{product_definition =>
bolt_and_nut_component_definition}
product_definition <-
product_definition_relationship.related_product_definition
product_definition_relationship =>
{product_definition_relationship.relating_product_definition ->
product_definition =>
bolt_and_nut_set_definition}
product_definition_usage =>
assembly_component_usage =>
quantified_assembly_component_usage
quantified_assembly_component_usage.quantity ->
measure_with_unit

© ISO 2001 – All rights reserved

{measure_with_unit =>
count_measure_with_unit}
[measure_with_unit.value_component]
[measure_with_unit.unit_component]

5.1.14.5 Bolt_and_nut_set

AIM element: bolt_and_nut_set_definition

Source: 227

Reference path: bolt_and_nut_set_definition <=
product_definition

5.1.14.5.1 set_id

AIM element: product_definition.id

Reference path: bolt_and_nut_set_definition <=
product_definition
product_definition.id

5.1.14.5.2 quantity_used

AIM element: [measure_with_unit.value_component]
[measure_with_unit.unit_component]

Source: 41

Reference path: bolt_and_nut_set_definition <=
product_definition <-
product_definition_relationship.related_product_definition
product_definition_relationship =>
{product_definition_relationship.relating_product_definition ->
product_definition =>
connection_material_definition}
product_definition_usage =>
assembly_component_usage =>
quantified_assembly_component_usage
quantified_assembly_component_usage.quantity ->
measure_with_unit
{measure_with_unit =>
count_measure_with_unit}
[measure_with_unit.value_component]
[measure_with_unit.unit_component]

5.1.14.5.3 bolt_and_nut_set to connection_material

AIM element: PATH

Reference path bolt_and_nut_set_definition <=
product_definition <-

© ISO 2001 – All rights reserved

product_definition_relationship.related_product_definition
product_definition_relationship
{product_definition_relationship =>
product_definition_usage =>
(assembly_component_usage)
(assembly_component_usage =>
quantified_assembly_component_usage)}
product_definition_relationship.relating_product_definition ->
product_definition =>
connection_material_definition

5.1.14.5.4 bolt_and_nut_set to bolt_and_nut_component

AIM element: PATH

Reference path: bolt_and_nut_set_definition <=
product_definition <-
product_definition_relationship.relating_product_definition
product_definition_relationship
{product_definition_relationship =>
product_definition_usage =>
(assembly_component_usage)
(assembly_component_usage =>
quantified_assembly_component_usage)}
product_definition_relationship.related_product_definition ->
product_definition =>
bolt_and_nut_component_definition

5.1.14.6 Clamp_set

AIM element: clamp_set_definition

Source: 227

Reference path: clamp_set_definition <=
product_definition

5.1.14.6.1 set_id

AIM element: product_definition.id

Reference path: clamp_set_definition <=
product_definition
product_definition.id

5.1.14.6.2 quantity

AIM element: [measure_with_unit.value_component]
[measure_with_unit.unit_component]

Source: 41

© ISO 2001 – All rights reserved

Reference path: clamp_set_definition <=
product_definition <-
product_definition_relationship.related_product_definition
product_definition_relationship =>
{product_definition_relationship.relating_product_definition ->
product_definition =>
connection_material_definition}
product_definition_usage =>
assembly_component_usage =>
quantified_assembly_component_usage
quantified_assembly_component_usage.quantity ->
measure_with_unit
{measure_with_unit =>
count_measure_with_unit}
[measure_with_unit.value_component]
[measure_with_unit.unit_component]

5.1.14.6.3 clamp_set to connection_material

AIM element: PATH

Reference path clamp_set_definition <=
product_definition <-
product_definition_relationship.related_product_definition
product_definition_relationship
{product_definition_relationship =>
product_definition_usage =>
(assembly_component_usage)
(assembly_component_usage =>
quantified_assembly_component_usage)}
product_definition_relationship.relating_product_definition ->
product_definition =>
connection_material_definition

5.1.14.6.4 clamp_set to clamp

AIM element: PATH

Reference path: clamp_set_definition <=
product_definition <-
product_definition_relationship.relating_product_definition
product_definition_relationship
{product_definition_relationship =>
product_definition_usage =>
(assembly_component_usage)
(assembly_component_usage =>
quantified_assembly_component_usage)}
product_definition_relationship.related_product_definition ->
product_definition =>
clamp_component_definition

© ISO 2001 – All rights reserved

5.1.14.6.5 clamp_set to bolt_and_nut_component

AIM element: PATH

Reference path: clamp_set_definition <=
product_definition <-
product_definition_relationship.relating_product_definition
product_definition_relationship
{product_definition_relationship =>
product_definition_usage =>
(assembly_component_usage)
(assembly_component_usage =>
quantified_assembly_component_usage)}
product_definition_relationship.related_product_definition ->
product_definition =>
bolt_and_nut_component_definition

5.1.14.7 Cable_support

AIM element: product

Source: 41

Rules: dependent_instantiable_product_context
product_context_discipline_type_constraint
value_for_application_context

Reference path: {[product
classification_item = product
classification_item <-
applied_classification_assignment.items[i]
applied_classification_assignment <=
classification_assignment
classification_assignment.assigned_classification ->
[group
group.name = 'cable support']
[group <-
group_relationship.related_group
{group_relationship
group_relationship.name = 'usage classification'}
group_relationship
group_relationship.relating_group ->
group
group.name = 'support component']]
[product
product.frame_of_reference[i] ->
product_context<=
application_context_element
application_context_element.name = 'plant item']}

5.1.14.7.1 cable_support_type

© ISO 2001 – All rights reserved

AIM element: group.name

Source: 41

Reference path: product
classification_item = product
classification_item <-
applied_classification_assignment.items[i]
applied_classification_assignment <=
{classification_assignment
classification_assignment.role ->
classification_role
classification_role.name = 'cable support type classification'}
classification_assignment
classification_assignment.assigned_classification ->
group
group.name

5.1.14.8 Catalogue_definition

AIM element: catalogue

Source: 227

Reference path: catalogue <=
(external_source)
(external_source =>
known_source)
[document]

5.1.14.8.1 catalogue_id

AIM element: document.id

Source: 41

Reference path: catalogue <=
document
document.id

5.1.14.8.2 catalogue_name

AIM element: document.name

Source: 41

Reference path: catalogue <=
document
document.name

5.1.14.8.3 catalogue_version

© ISO 2001 – All rights reserved

AIM element: document.description

Source: 41

Reference path: catalogue <=
document
document.description

5.1.14.8.4 catalogue_definition to catalogue_connector

AIM element: PATH

Rules: subtype_mandatory_pre_defined_item

Reference path: catalogue <=
(external_source)
(external_source =>
known_source) <-
externally_defined_item.source
externally_defined_item =>
catalogue_connector

5.1.14.8.5 catalogue_definition to catalogue_item

AIM element: PATH

Rules: subtype_mandatory_pre_defined_item

Reference path: catalogue <=
(external_source)
(external_source =>
known_source) <-
externally_defined_item.source
externally_defined_item =>
externally_defined_plant_item_definition =>
catalogue_item

5.1.14.9 Catalogue_item

AIM element: catalogue_item

Source: 227

Reference path: catalogue_item <=
externally_defined_plant_item_definition <=
[product_definition
{product_definition
product_definition.frame_of_reference ->
product_definition_context <=
application_context_element
application_context_element.name = 'physical definition'}]
[externally_defined_item
{externally_defined_item

© ISO 2001 – All rights reserved

externally_defined_item.source ->
(external_source)
(external_source =>
known_source) =>
catalogue}]

5.1.14.9.1 item_name

AIM element: product.name

Source: 41

Reference path: catalogue_item <=
externally_defined_plant_item_definition <=
product_definition
product_definition.formation ->
product_definition_formation
product_definition_formation.of_product ->
product
product.name

5.1.14.9.2 item_version

AIM element: product_definition_formation.id

Source: 41

Reference path: catalogue_item <=
externally_defined_plant_item_definition <=
product_definition
product_definition.formation ->
product_definition_formation
product_definition_formation.id

5.1.14.9.3 model_number

AIM element: product.id

Source: 41

Reference path: catalogue_item <=
externally_defined_plant_item_definition <=
product_definition
product_definition.formation ->
product_definition_formation
product_definition_formation.of_product ->
product
product.id

5.1.14.9.4 catalogue_item to catalogue_item_substitute (has as substitute)

© ISO 2001 – All rights reserved

AIM element: PATH

Reference path: catalogue_item <=
externally_defined_plant_item_definition <=
product_definition <-
product_definition_relationship.related_product_definition
product_definition_relationship <-
product_definition_substitute.context_relationship
product_definition_substitute

5.1.14.9.5 catalogue_item to catalogue_item_substitute (is substitute)

AIM element: PATH

Reference path: catalogue_item <=
externally_defined_plant_item_definition <=
product_definition <-
product_definition_substitute.substitute_definition
product_definition_substitute

5.1.14.9.6 catalogue_item to plant_item_definition (is defined by)

AIM element: PATH

Reference path: catalogue_item <=
externally_defined_plant_item_definition

5.1.14.10 Catalogue_item_substitute

AIM element: product_definition_substitute

Source: 41

5.1.14.11 Connected_collection

AIM element: assembly_component_usage

Source: 44

Reference path: {assembly_component_usage <=
product_definition_usage <=
product_definition_relationship
(product_definition_relationship.name = 'connected collection')
(product_definition_relationship.name = 'connected hierarchical collection')}

5.1.14.11.1 connected_collection to plant_item_connection

AIM element: PATH

Reference path: assembly_component_usage <=
product_definition_usage <=
product_definition_relationship

© ISO 2001 – All rights reserved

product_definition_relationship.relating_product_definition ->
product_definition
characterized_product_definition = product_definition
characterized_product_definition
characterized_definition = characterized_product_definition
characterized_definition <-
property_definition.definition
property_definition =>
product_definition_shape <-
shape_aspect.of_shape
shape_aspect =>
plant_item_connection

5.1.14.12 Connection_component

AIM element: product

Source: 41

Rules: dependent_instantiable_product_context
product_context_discipline_type_constraint
value_for_application_context

Reference path: {[product
classification_item = product
classification_item <-
applied_classification_assignment.items[i]
applied_classification_assignment <=
classification_assignment
classification_assignment.assigned_classification ->
group
group.name = 'connection component']
[product
product.frame_of_reference[i] ->
product_context<=
application_context_element
application_context_element.name = 'plant item']}

5.1.14.13 Connection_material

AIM element: connection_material_definition

Source: 227

Reference path connection_material_definition <=
product_definition

5.1.14.13.1 material_name

AIM element: material_designation.name

Source: 45

© ISO 2001 – All rights reserved

Reference path: connection_material_definition <=
product_definition
characterized_product_definition = product_definition
characterized_product_definition
characterized_definition = characterized_product_definition
characterized_definition <-
property_definition.definition
property_definition =>
product_definition_shape <-
shape_aspect.of_shape
shape_aspect =>
plant_item_connection <=
shape_aspect_relationship
shape_aspect_relationship
shape_definition = shape_aspect_relationship
shape_definition
characterized_definition = shape_definition
characterized_definition <-
material_designation.definitions[i]
material_designation
material_designation.name

5.1.14.14 Design_project

AIM element: design_project

Source: 227

Reference path: design_project <=
organization

5.1.14.14.1 description

AIM element: organization.description

Source: 41

Reference path: design_project <=
organization
organization.description

5.1.14.14.2 design_project_id

AIM element: organization.id

Source: 41

Reference path: design_project <=
organization
organization.id

© ISO 2001 – All rights reserved

5.1.14.14.3 name

AIM element: organization.name

Source: 41

Reference path: design_project <=
organization
organization.name

5.1.14.14.4 owner

AIM element: organization.name

Source: 41

Reference path: design_project
plant_spatial_configuration_organization_item = design_project
plant_spatial_configuration_organization_item <-
plant_spatial_configuration_organization_assignment.items[i]
plant_spatial_configuration_organization_assignment <=
{organization_assignment
organization_assignment.role ->
organization_role
organization_role.name = 'project owner'}
organization_assignment
organization_assignment.assigned_organization ->
organization
organization.name

5.1.14.14.5 design_project to project_design_assignment

AIM element: PATH

Reference path: design_project <=
organization <-
organization_assignment.assigned_organization
organization_assignment =>
design_project_assignment

5.1.14.15 Document

AIM element: document

Source: 41

Reference path

5.1.14.15.1 document_id

AIM element: document.id

© ISO 2001 – All rights reserved

Source: 41

Reference path: document
document.id

5.1.14.15.2 version_id

AIM element: identification_assignment.assigned_id

Source: 41

Reference path: document
identification_item = document
identification_item <-
applied_identification_assignment.items[i]
applied_identification_assignment <=
identification_assignment
{identification_assignment.role ->
identification_role
identification_role.name = 'document version id'}
identification_assignment.assigned_id

5.1.14.15.3 document_type

AIM element: document_type.product_data_type

Source: 41

Reference path: document
document.kind ->
document_type
document_type.product_data_type

5.1.14.15.4 internal_document_reference

AIM element: [document_usage_constraint.subject_element]
[document_usage_constraint.subject_element_value]

Source: 41

Reference path: document <-
document_usage_constraint.source
document_usage_constraint
[document_usage_constraint.subject_element]
[document_usage_constraint.subject_element_value]

5.1.14.15.5 document to plant_item

#1: The whole document is associated with the plant_item

#2: Part of the document is associated with the plant_item

© ISO 2001 – All rights reserved

AIM element: PATH

Reference path: document
#1: (document <-
document_usage_constraint.source
document_usage_constraint <-
document_usage_constraint_assignment.assigned_document_usage
document_usage_constraint_assignment =>
applied_document_usage_constraint_assignment
applied_document_usage_constraint_assignment.items[i] ->
document_usage_constraint_item=
(product_definition)
(externally_defined_plant_item_definition)
(product))
#2: (document <-
document_reference.assigned_document
document_reference =>
applied_document_reference
applied_document_reference.items[i] ->
document_item =
(product_definition)
(externally_defined_plant_item_definition)
(product))

5.1.14.15.6 document to plant_item_connector

#1: The whole document is associated with the plant_item_connector

#2: Part of the document is associated with the plant_item_connector

AIM element: PATH

Reference path: document
#1: (document <-
document_usage_constraint.source
document_usage_constraint <-
document_usage_constraint_assignment.assigned_document_usage
document_usage_constraint_assignment =>
applied_document_usage_constraint_assignment
applied_document_usage_constraint_assignment.items[i] ->
document_usage_constraint_item =
plant_item_connector)
#2: (document <-
document_reference.assigned_document
document_reference =>
applied_document_reference
applied_document_reference.items[i] ->
document_item =
plant_item_connector)

5.1.14.16 Ducting_component

© ISO 2001 – All rights reserved

AIM element: product

Source: 41

Rules: dependent_instantiable_product_context
product_context_discipline_type_constraint
value_for_application_context

Reference path: {[product
classification_item = product
classification_item <-
applied_classification_assignment.items[i]
applied_classification_assignment <=
classification_assignment
classification_assignment.assigned_classification ->
group
group.name = 'ducting component']
[product
product.frame_of_reference[i] ->
product_context<=
application_context_element
application_context_element.name = 'plant item']}

5.1.14.17 Electrical_component

AIM element: product

Source: 41

Rules: dependent_instantiable_product_context
product_context_discipline_type_constraint
value_for_application_context

Reference path: {[product
classification_item = product
classification_item <-
applied_classification_assignment.items[i]
applied_classification_assignment <=
classification_assignment
classification_assignment.assigned_classification ->
group
group.name = 'electrical component']
[product
product.frame_of_reference[i] ->
product_context<=
application_context_element
application_context_element.name = 'plant item']}

5.1.14.18 Equipment

AIM element: product

© ISO 2001 – All rights reserved

Source: 41

Rules: dependent_instantiable_product_context
product_context_discipline_type_constraint
value_for_application_context

Reference path: {[product
classification_item = product
classification_item <-
applied_classification_assignment.items[i]
applied_classification_assignment <=
classification_assignment
classification_assignment.assigned_classification ->
group
group.name = 'equipment']
[product
product.frame_of_reference[i] ->
product_context<=
application_context_element
application_context_element.name = 'plant item']}

5.1.14.18.1 equipment_characteristics

AIM element: ([representation_item.name]
[(descriptive_representation_item.description)
([measure_with_unit.value_component]
[measure_with_unit.unit_component])])

([representation_item.name]
[(descriptive_representation_item.description)
([measure_with_unit.value_component]
[measure_with_unit.unit_component])]
[document_usage_constraint.subject_element_value])

Source: 41, 43, 45

Reference path: product <-
product_definition_formation.of_product
product_definition_formation <-
product_definition.formation
product_definition
characterized_product_definition = product_definition
characterized_product_definition
characterized_definition = characterized_product_definition
characterized_definition <-
property_definition.definition
{property_definition
property_definition.name = 'general characteristics'}
property_definition
represented_definition = property_definition
represented_definition <-
property_definition_representation.definition
property_definition_representation
property_definition_representation.used_representation ->

© ISO 2001 – All rights reserved

representation
representation.items[i] ->
[representation_item
representation_item.name]
[representation_item =>
(descriptive_representation_item
descriptive_representation_item.description)
(measure_representation_item <=
measure_with_unit
[measure_with_unit.value_component]
[measure_with_unit.unit_component])]
[(representation_item)
(representation_item
document_item = representation_item
document_item <-
applied_document_reference.items[i]
applied_document_reference <=
document_reference
document_reference.assigned_document ->
document <-
document_usage_constraint.source
document_usage_constraint
document_usage_constraint.subject_element_value)]

5.1.14.18.2 equipment_type

AIM element: group.name

Source: 41

Reference path: product
classification_item = product
classification_item <-
applied_classification_assignment.items[i]
applied_classification_assignment <=
{classification_assignment
classification_assignment.role ->
classification_role
classification_role.name = 'equipment type classification'}
classification_assignment
classification_assignment.assigned_classification ->
group
group.name

5.1.14.18.3 heat_tracing_type

AIM element: (heat_tracing_representation)
([heat_tracing_representation]
[document_usage_constraint.subject_element_value])

Source: 227

Reference path: product <-

© ISO 2001 – All rights reserved

product_definition_formation.of_product
product_definition_formation <-
product_definition.formation
product_definition
characterized_product_definition = product_definition
characterized_product_definition
characterized_definition = characterized_product_definition
characterized_definition <-
property_definition.definition
property_definition
represented_definition = property_definition
represented_definition <-
property_definition_representation.definition
property_definition_representation
property_definition_representation.used_representation ->
representation =>
(heat_tracing_representation)
([heat_tracing_representation]
[heat_tracing_representation
document_item = heat_tracing_representation
document_item <-
applied_document_reference.items[i]
applied_document_reference <=
document_reference
document_reference.assigned_document ->
document <-
document_usage_constraint.source
document_usage_constraint
document_usage_constraint.subject_element_value])
41

5.1.14.18.4 insulation_specification

AIM element: document_usage_constraint.subject_element_value

Source: 41

Reference path: product
document_item = product
document_item <-
applied_document_reference.items[i]
applied_document_reference <=
document_reference
document_reference.assigned_document ->
document <-
document_usage_constraint.source
document_usage_constraint
document_usage_constraint.subject_element_value

5.1.14.18.5 rated_temperature

AIM element: [measure_with_unit.value_component]

© ISO 2001 – All rights reserved

[measure_with_unit.unit_component]

Source: 41

Reference path: product <-
product_definition_formation.of_product
product_definition_formation <-
product_definition.formation
product_definition
characterized_product_definition = product_definition
characterized_product_definition
characterized_definition = characterized_product_definition
characterized_definition <-
property_definition.definition
property_definition <-
represented_definition = property_definition
represented_definition <-
property_definition_representation.definition
property_definition_representation
property_definition_representation.using_representation ->
representation
{representation.name = 'equipment characteristics'}
(representation.items[i] ->
{representation_item
(representation_item.name = 'rated temperature')
(representation_item.name = 'maximum rated temperature')
(representation_item.name = 'minimum rated temperature')})
([representation.items[i] ->
{representation_item
representation_item.name = 'maximum rated temperature'}]
[representation.items[i] ->
{representation_item
representation_item.name = 'minimum rated temperature'}])
representation_item =>
measure_representation_item <=
measure_with_unit
[measure_with_unit.value_component]
[measure_with_unit.unit_component]

5.1.14.18.6 shock_qualification_status

AIM element: descriptive_representation_item.description

Source: 45

Reference path: product <-
product_definition_formation.of_product
product_definition_formation <-
product_definition.formation
product_definition
characterized_product_definition = product_definition
characterized_product_definition
characterized_definition = characterized_product_definition
characterized_definition <-

© ISO 2001 – All rights reserved

property_definition.definition
property_definition <-
property_definition_representation.definition
property_definition_representation
property_definition_representation.using_representation ->
representation
{representation.name = 'equipment characteristics'}
representation.items[i] ->
representation_item
{representation_item.name = 'shock qualification status')
representation_item =>
descriptive_representation_item
descriptive_representation_item.description

5.1.14.18.7 vibration_amplitude

AIM element: [measure_with_unit.value_component]
[measure_with_unit.unit_component]

Source: 41

Reference path: product <-
product_definition_formation.of_product
product_definition_formation <-
product_definition.formation
product_definition
characterized_product_definition = product_definition
characterized_product_definition
characterized_definition = characterized_product_definition
characterized_definition <-
property_definition.definition
property_definition <-
represented_definition = property_definition
represented_definition <-
property_definition_representation.definition
property_definition_representation
property_definition_representation.using_representation ->
representation
{representation.name = 'equipment characteristics'}
(representation.items[i] ->
{representation_item
(representation_item.name = 'vibration amplitude')
(representation_item.name = 'maximum vibration amplitude')
(representation_item.name = 'minimum vibration amplitude')})
([representation.items[i] ->
{representation_item
representation_item.name = 'maximum vibration amplitude'}]
[representation.items[i] ->
{representation_item
representation_item.name = 'minimum vibration amplitude'}])
representation_item =>
measure_representation_item <=
measure_with_unit

© ISO 2001 – All rights reserved

[measure_with_unit.value_component]
[measure_with_unit.unit_component]

5.1.14.18.8 vibration_frequency

AIM element: [measure_with_unit.value_component]
[measure_with_unit.unit_component]

Source: 41

Reference path: product <-
product_definition_formation.of_product
product_definition_formation <-
product_definition.formation
product_definition
characterized_product_definition = product_definition
characterized_product_definition
characterized_definition = characterized_product_definition
characterized_definition <-
property_definition.definition
property_definition <-
represented_definition = property_definition
represented_definition <-
property_definition_representation.definition
property_definition_representation
property_definition_representation.using_representation ->
representation
{representation.name = 'equipment characteristics'}
(representation.items[i] ->
{representation_item
(representation_item.name = 'vibration frequency')
(representation_item.name = 'maximum vibration frequency')
(representation_item.name = 'minimum vibration frequency')})
([representation.items[i] ->
{representation_item
representation_item.name = 'maximum vibration frequency'}]
[representation.items[i] ->
{representation_item
representation_item.name = 'minimum vibration frequency'}])
representation_item =>
measure_representation_item <=
measure_with_unit
[measure_with_unit.value_component]
[measure_with_unit.unit_component]

5.1.14.18.9 equipment to equipment_trim_piping

AIM element: PATH

Reference path: product <-
product_definition_formation.of_product
product_definition_formation <-
product_definition.formation

© ISO 2001 – All rights reserved

product_definition <-
product_definition_relationship.relating_product_definition
product_definition_relationship
{product_definition_relationship
product_definition_relationship.name = 'trim piping'}

5.1.14.18.10 equipment to supplied_equipment

AIM element: IDENTICAL MAPPING

5.1.14.19 Equipment_breaching

AIM element: product

Source: 41

Rules: dependent_instantiable_product_context
product_context_discipline_type_constraint
value_for_application_context

Reference path: {[product
classification_item = product
classification_item <-
applied_classification_assignment.items[i]
applied_classification_assignment <=
classification_assignment
classification_assignment.assigned_classification ->
[group
group.name = 'equipment breaching']
[group <-
group_relationship.related_group
{group_relationship
group_relationship.name = 'usage classification'}
group_relationship
group_relationship.relating_group ->
group
group.name = 'ducting component']]
[product
product.frame_of_reference[i] ->
product_context<=
application_context_element
application_context_element.name = 'plant item']}

5.1.14.20 Equipment_trim_piping

AIM element: product_definition_relationship

Source: 41

Reference path: {product_definition_relationship
[product_definition_relationship.relating_product_definition ->
product_definition
product_definition.formation ->

© ISO 2001 – All rights reserved

product_definition_formation
product_definition_formation.of_product ->
product
classification_item = product
classification_item <-
applied_classification_assignment.items[i]
applied_classification_assignment <=
classification_assignment
classification_assignment.assigned_classification ->
group
group.name = 'equipment']
[product_definition_relationship.related_product_definition ->
product_definition =>
piping_component_definition]
[product_definition_relationship.name = 'trim piping']}

5.1.14.21 Externally_defined_document

AIM element: externally_defined_document

Source: 227

Reference path: externally_defined_document <=
[document]
[externally_defined_item]

5.1.14.21.1 source_id

AIM element: external_source.source_id

Source: 41

Reference path: externally_defined_document <=
externally_defined_item
externally_defined_item.source ->
external_source
external_source.source_id

5.1.14.21.2 source_description

AIM element: description_attribute.attribute_value

Source: 41

Reference path: externally_defined_document <=
externally_defined_item
externally_defined_item.source ->
external_source
description_attribute_select = external_source
description_attribute_select <-
description_attribute.described_item
description_attribute

© ISO 2001 – All rights reserved

description_attribute.attribute_value

5.1.14.22 Externally_defined_user_defined_attribute_value

AIM element: externally_defined_representation_item

Source: 227

Reference path: externally_defined_representation <=
[representation_item]
[externally_defined_item]

5.1.14.22.1 source

AIM element: external_source.name

Source: 41

Reference path: externally_defined_representation_item <=
externally_defined_item
externally_defined_item.source ->
external_source
external_source.name

5.1.14.23 Functional_design_view

AIM element: (product_definition)
(externally_defined_plant_item_definition)

Source: 41, 227

Rules: dependent_instantiable_product_context
product_context_discipline_type_constraint
value_for_application_context

Reference path: (product_definition)
(externally_defined_plant_item_definition <=
[externally_defined_item]
[product_definition])
{product_definition
[product_definition.formation ->
product_definition_formation
product_definition_formation.of_product ->
product
product.frame_of_reference[i] ->
product_context<=
application_context_element
application_context_element.name = 'plant item']
[product_definition.frame_of_reference ->
[product_definition_context <=
application_context_element
(application_context_element.name = 'functional definition')
(application_context_element.name = 'functional occurrence')]

© ISO 2001 – All rights reserved

[product_definition_context
product_definition_context.life_cycle_stage = 'functional design']]}

5.1.14.23.1 tag_number

AIM element: product_definition.id

Source: 41

Reference path: (product_definition)
(externally_defined_plant_item_definition <=
product_definition)
{product_definition
product_definition.frame_of_reference ->
product_definition_context <=
application_context_element
application_context_element.name = 'functional occurrence'}
product_definition.id

5.1.14.23.2 functional_design_view to functional_plant_item_satisfaction

AIM element: PATH

Reference path: (product_definition <-)
(externally_defined_plant_item_definition <=
product_definition <-)
product_definition_relationship.relating_product_definition
product_definition_relationship
{product_definition_relationship
product_definition_relationship.name = 'plant item satisfaction'}

5.1.14.24 Functional_plant_item_satisfaction

AIM element: product_definition_relationship

Source: 41

Reference path: {product_definition_relationship
product_definition_relationship.name = 'plant item satisfaction'}

5.1.14.25 Hexagon_head_bolt

AIM element: bolt_and_nut_component_definition

Source: 227

Rules: dependent_instantiable_product_context
product_context_discipline_type_constraint
value_for_application_context

Reference path: bolt_and_nut_component_definition <=
product_definition

© ISO 2001 – All rights reserved

```
{bolt_and_nut_component_definition
classification_item = piping_support_definition
classification_item <-
applied_classification_assignment.items[i]
applied_classification_assignment <=
classification_assignment
classification_assignment.assigned_classification ->
[group =>
bolt_and_nut_component_class]
[group
group.name = 'hexagon head bolt']
[group <-
group_relationship.related_group
group_relationship
{group_relationship.name = 'class hierarchy'}
group_relationship.relating_group ->
group
{[group.name = 'bolt']
[group =>
bolt_and_nut_component_class]}}
{product_definition
product_definition.formation ->
product_definition_formation
product_definition_formation.of_product ->
[product
classification_item = product
classification_item <-
applied_classification_assignment.items[i]
applied_classification_assignment <=
classification_assignment
classification_assignment.assigned_classification ->
(group)
(group <-
group_relationship.related_group
group_relationship
group_relationship.relating_group ->
group)
group.name = 'bolt and nut component']
[product
product.frame_of_reference[i] ->
product_context <=
application_context_element
application_context_element.name = 'plant item']})
```

5.1.14.25.1 length

AIM element: [measure_with_unit.value_component]
[measure_with_unit.unit_component]

Source: 41

Rules: subtype_mandatory_shape_representation

© ISO 2001 – All rights reserved

Reference path: bolt_and_nut_component_definition <=
product_definition
characterized_product_definition = product_definition
characterized_product_definition
characterized_definition = characterized_product_definition
characterized_definition <-
property_definition.definition
property_definition =>
product_definition_shape <-
shape_aspect.of_shape
[shape_aspect <-
shape_aspect_relationship.relating_shape_aspect]
[shape_aspect <-
shape_aspect_relationship.related_shape_aspect]
shape_aspect_relationship =>
dimensional_location
dimensional_characteristic = dimensional_location
dimensional_characteristic <-
dimensional_characteristic_representation.dimension
dimensional_characteristic_representation
dimensional_characteristic_representation.representation ->
shape_dimension_representation <=
shape_representation <=
{representation
representation.name = 'hexagon head bolt dimensional shape'}
representation
representation.items[i] ->
representation_item =>
{representation_item.name = 'length'}
measure_representation_item <=
{measure_with_unit =>
length_measure_with_unit}
measure_with_unit
[measure_with_unit.value_component]
[measure_with_unit.unit_component]

5.1.14.26 Hierarchically_organized_collection

AIM element: assembly_component_usage

Source: 44

Reference path: {assembly_component_usage <=
product_definition_usage <=
product_definition_relationship
(product_definition_relationship.name = 'hierarchical collection')
(product_definition_relationship.name = 'connected hierarchical collection')}

5.1.14.27 Installed_physical_design_view

AIM element: (product_definition)
(externally_defined_plant_item_definition)

© ISO 2001 – All rights reserved

Source: 41, 227

Rules: dependent_instantiable_product_context
product_context_discipline_type_constraint
value_for_application_context

Reference path: (product_definition)
(externally_defined_plant_item_definition <=
[externally_defined_item]
[product_definition])
{product_definition
[product_definition.formation ->
product_definition_formation
product_definition_formation.of_product ->
product
product.frame_of_reference[i] ->
product_context<=
application_context_element
application_context_element.name = 'plant item']
[product_definition.description = 'installed']
[product_definition.frame_of_reference ->
[product_definition_context <=
application_context_element
application_context_element.name = 'physical occurrence']
[product_definition_context
product_definition_context.life_cycle_stage = 'physical design']]}

5.1.14.27.1 serial_number

AIM element: product_definition.id

Source: 41

Reference path: (product_definition)
(externally_defined_plant_item_definition <=
product_definition)
product_definition.id

5.1.14.28 Instrument

AIM element: product

Source: 41

Rules: dependent_instantiable_product_context
product_context_discipline_type_constraint
value_for_application_context

Reference path: {[product
classification_item = product
classification_item <-
applied_classification_assignment.items[i]
applied_classification_assignment <=

© ISO 2001 – All rights reserved

classification_assignment
classification_assignment.assigned_classification ->
[group
group.name = 'instrument']
[group <-
group_relationship.related_group
{group_relationship
group_relationship.name = 'usage classification'}
group_relationship
group_relationship.relating_group ->
group
group.name = 'instrumentation and control component']]
[product
product.frame_of_reference[i] ->
product_context<=
application_context_element
application_context_element.name = 'plant item']
[product <-
product_definition_formation.of_product
product_definition_formation <-
product_definition.formation
product_definition <-
product_definition_relationship.related_product_definition
{product_definition_relationship
product_definition_relationship.name = 'control loop element'}
product_definition_relationship
product_definition_relationship.relating_product_definition ->
product_definition
product_definition.formation ->
product_definition_formation
product_definition_formation.of_product ->
product
classification_item = product
classification_item <-
applied_classification_assignment.items[i]
applied_classification_assignment <=
classification_assignment
classification_assignment.assigned_classification ->
group
group.name = 'control loop']}

5.1.14.28.1 control_loop_id

AIM element: product.id

Source: 41

Reference path: product <-
product_definition_formation.of_product
product_definition_formation <-
product_definition.formation
product_definition <-
product_definition_relationship.related_product_definition
{product_definition_relationship

© ISO 2001 – All rights reserved

product_definition_relationship.name = 'control loop element'}
product_definition_relationship
product_definition_relationship.relating_product_definition ->
product_definition
product_definition.formation ->
product_definition_formation
product_definition_formation.of_product ->
product
product.id

5.1.14.28.2 instrument_type

AIM element: group.name

Source: 41

Reference path: product
classification_item = product
classification_item <-
applied_classification_assignment.items[i]
applied_classification_assignment <=
{classification_assignment
classification_assignment.role ->
classification_role
classification_role.name = 'instrument type classification'}
classification_assignment
classification_assignment.assigned_classification ->
group
group.name

5.1.14.28.3 sensor_type

AIM element: descriptive_representation_item.description

Source: 45

Reference path: product <-
product_definition_formation.of_product
product_definition_formation <-
product_definition.formation
product_definition
characterized_product_definition = product_definition
characterized_product_definition
characterized_definition = characterized_product_definition
characterized_definition <-
property_definition.definition
property_definition
represented_definition = property_definition
represented_definition <-
property_definition_representation.definition
property_definition_representation
property_definition_representation.used_representation ->
representation

© ISO 2001 – All rights reserved

representation.items[i] ->
{representation_item
representation_item.name = 'sensor type'}
representation_item =>
descriptive_representation_item
descriptive_representation_item.description

5.1.14.28.4 signal_type

AIM element: descriptive_representation_item.description

Source: 45

Reference path: product <-
product_definition_formation.of_product
product_definition_formation <-
product_definition.formation
product_definition
characterized_product_definition = product_definition
characterized_product_definition
characterized_definition = characterized_product_definition
characterized_definition <-
property_definition.definition
property_definition
represented_definition = property_definition
represented_definition <-
property_definition_representation.definition
property_definition_representation
property_definition_representation.used_representation ->
representation
representation.items[i] ->
{representation_item
representation_item.name = 'signal type'}
representation_item =>
descriptive_representation_item
descriptive_representation_item.description

5.1.14.28.5 stream_interaction_type

AIM element: descriptive_representation_item.description

Source: 45

Reference path: product <-
product_definition_formation.of_product
product_definition_formation <-
product_definition.formation
product_definition
characterized_product_definition = product_definition
characterized_product_definition
characterized_definition = characterized_product_definition
characterized_definition <-
property_definition.definition

© ISO 2001 – All rights reserved

property_definition
represented_definition = property_definition
represented_definition <-
property_definition_representation.definition
property_definition_representation
property_definition_representation.used_representation ->
representation
representation.items[i] ->
{representation_item
representation_item.name = 'stream interaction type'}
representation_item =>
descriptive_representation_item
descriptive_representation_item.description

5.1.14.29 Instrumentation_and_control_component

AIM element: product

Source: 41

Rules: dependent_instantiable_product_context
product_context_discipline_type_constraint
value_for_application_context

Reference path: {[product
classification_item = product
classification_item <-
applied_classification_assignment.items[i]
applied_classification_assignment <=
classification_assignment
classification_assignment.assigned_classification ->
group
group.name = 'instrumentation and control component']
[product
product.frame_of_reference[i] ->
product_context<=
application_context_element
application_context_element.name = 'plant item']}

5.1.14.30 Insulation

AIM element: product

Source: 41

Rules: dependent_instantiable_product_context
product_context_discipline_type_constraint
value_for_application_context

Reference path: {[product
classification_item = product
classification_item <-
applied_classification_assignment.items[i]

© ISO 2001 – All rights reserved

applied_classification_assignment <=
classification_assignment
classification_assignment.assigned_classification ->
group
group.name = 'insulation']
[product
product.frame_of_reference[i] ->
product_context<=
application_context_element

5.1.14.31 Material_specification_selection

AIM element: [material_property]
[document]

Source: 41, 45

Reference path: {document
document.kind ->
document_type
document_type.product_data_type = 'material specification'}

5.1.14.31.1 description

AIM element: property_definition.description

Source: 41

Reference path: material_property <=
property_definition
property_definition.description

5.1.14.31.2 material_specification_id

AIM element: document.id

Source: 41

5.1.14.31.3 required_or_optional

AIM element: group.name

Source: 41

Reference path: document <-
document_reference.assigned_document
document_reference =>
applied_document_reference
classification_item = applied_document_reference
classification_item <-
applied_classification_assignment.items[i]applied_classification_assignment <=
classification_ssignment

© ISO 2001 – All rights reserved

classification_ssignment.assigned__classification>
group
{(group.name = 'required')
(group.name = 'optional')}

5.1.14.31.4 selection_id

AIM element: document_usage_constraint.subject_element

Source: 41

Reference path: document <-
document_usage_constraint.source
document_usage_constraint
document_usage_constraint.subject_element

5.1.14.31.5 type

AIM element: document_usage_constraint.subject_element_value

Source: 41

Reference path: document <-
document_usage_constraint.source
document_usage_constraint
document_usage_constraint.subject_element_value

5.1.14.31.6 material_specification_selection to material_specification_-subset_reference

AIM element: PATH

Reference path: document <-
document_relationship.relating_document
document_relationship
{document_relationship
document_relationship.description = 'subset'}

5.1.14.32 Material_specification_subset_reference

AIM element: document_relationship

Source: 41

Reference path: {document_relationship
document_relationship.description = 'subset'}

5.1.14.32.1 subset_id

AIM element: document_relationship.name

© ISO 2001 – All rights reserved

Source: 41

5.1.14.33 Nozzle

AIM element: product

Source: 41

Rules: dependent_instantiable_product_context
product_context_discipline_type_constraint
value_for_application_context

Reference path: {[product
classification_item = product
classification_item <-
applied_classification_assignment.items[i]
applied_classification_assignment <=
classification_assignment
classification_assignment.assigned_classification ->
group
group.name = 'nozzle']
[product
product.frame_of_reference[i] ->
product_context<=
application_context_element
application_context_element.name = 'plant item']}

5.1.14.34 Nut

AIM element: bolt_and_nut_component_definition

Source: 227

Rules: dependent_instantiable_product_context
product_context_discipline_type_constraint
value_for_application_context

Reference path: bolt_and_nut_component_definition <=
product_definition
{bolt_and_nut_component_definition
classification_item = piping_support_definition
classification_item <-
applied_classification_assignment.items[i]
applied_classification_assignment <=
classification_assignment
classification_assignment.assigned_classification ->
[group =>
bolt_and_nut_component_class]
[group
group.name = 'nut']}
{product_definition
product_definition.formation ->
product_definition_formation

© ISO 2001 – All rights reserved

product_definition_formation.of_product ->
[product
classification_item = product
classification_item <-
applied_classification_assignment.items[i]
applied_classification_assignment <=
classification_assignment
classification_assignment.assigned_classification ->
(group)
(group <-
group_relationship.related_group
group_relationship
group_relationship.relating_group ->
group)
group.name = 'bolt and nut component']
[product
product.frame_of_reference[i] ->
product_context <=
application_context_element
application_context_element.name = 'plant item']})

5.1.14.34.1 nut_type

AIM element: group.name

Source: 41

Reference path: bolt_and_nut_component_definition
classification_item = piping_support_definition
classification_item <-
applied_classification_assignment.items[i]
applied_classification_assignment <=
classification_assignment
classification_assignment.assigned_classification ->
group <-
{[group =>
bolt_and_nut_component_class]
[group
group.name = 'nut']}
group_relationship.relating_group
group_relationship
{group_relationship.name = 'class hierarchy'}
group_relationship.related_group ->
group
{group =>
bolt_and_nut_component_class}
group.name

5.1.14.35 Offline_instrument

AIM element: product

© ISO 2001 – All rights reserved

Source: 41

Rules: dependent_instantiable_product_context
product_context_discipline_type_constraint
value_for_application_context

Reference path: {[product
classification_item = product
classification_item <-
applied_classification_assignment.items[i]
applied_classification_assignment <=
classification_assignment
classification_assignment.assigned_classification ->
[group
group.name = 'offline instrument']
[group <-
group_relationship.related_group
{group_relationship
group_relationship.name = 'usage classification'}
group_relationship
group_relationship.relating_group ->
group
group.name = 'instrument']]
[product
product.frame_of_reference[i] ->
product_context<=
application_context_element
application_context_element.name = 'plant item']}

5.1.14.36 Physical_design_view

AIM element: (product_definition)
(externally_defined_plant_item_definition)

Source: 41, 227

Rules: dependent_instantiable_product_context
product_context_discipline_type_constraint
value_for_application_context

Reference path: (product_definition)
(externally_defined_plant_item_definition <=
[externally_defined_item]
[product_definition])
{product_definition
[product_definition.formation ->
product_definition_formation
product_definition_formation.of_product ->
product
product.frame_of_reference[i] ->
product_context<=
application_context_element
application_context_element.name = 'plant item']
[product_definition.frame_of_reference ->

© ISO 2001 – All rights reserved

[product_definition_context <=
application_context_element
(application_context_element.name = 'physical definition')
(application_context_element.name = 'physical occurrence')]
[product_definition_context
product_definition_context.life_cycle_stage = 'physical design']]}

5.1.14.36.1 physical_design_view to functional_plant_item_satisfaction

AIM element: PATH

Reference path: (product_definition <-)
(externally_defined_plant_item_definition <=
product_definition <-)
product_definition_relationship.related_product_definition
product_definition_relationship
{product_definition_relationship
product_definition_relationship.name = 'plant item satisfaction'}

5.1.14.36.2 physical_design_view to installed_physical_design_view

5.1.14.37 Piping_assembly

AIM element: product_definition

Source: 41

Reference path: {product_definition
product_definition.frame_of_reference ->
product_definition_context <=
application_context_element
application_context_element.name = 'fabrication assembly'}

5.1.14.37.1 piping_assembly_number

AIM element: product_definition.id

Source: 41

5.1.14.37.2 piping_assembly to piping_assembly_assignment

AIM element: PATH

Reference path: product_definition <-
product_definition_relationship.relating_product_definition
product_definition_relationship =>
product_definition_usage

5.1.14.38 Piping_assembly_assignment

© ISO 2001 – All rights reserved

AIM element: product_definition_usage

Source: 44

Reference path: {product_definition_usage <=
product_definition_relationship
[product_definition_relationship.relating_product_definition ->
product_definition
product_definition.frame_of_reference ->
product_definition_context <=
application_context_element
application_context_element.name = 'fabrication assembly']
[product_definition_relationship.related_product_definition ->
{(product_definition)
(product_definition =>
externally_defined_plant_item_definition}
product_definition
product_definition.frame_of_reference ->
product_definition_context <=
application_context_element
(application_context_element.name = 'functional occurrence')
(application_context_element.name = 'physical occurrence')]}

5.1.14.39 Piping_system_component

AIM element: piping_component_definition

Source: 227

Rules: dependent_instantiable_product_context
product_context_discipline_type_constraint
value_for_application_context

Reference path: piping_component_definition <=
product_definition
{product_definition
product_definition.formation ->
product_definition_formation
product_definition_formation.of_product ->
product
product.frame_of_reference[i] ->
product_context<=
application_context_element
application_context_element.name = 'plant item'}

5.1.14.39.1 coating_reference

AIM element: descriptive_representation_item.description

Source: 45

Reference path: piping_component_definition <=
product_definition

© ISO 2001 – All rights reserved

characterized_product_definition = product_definition
characterized_product_definition
characterized_definition = characterized_product_definition
characterized_definition <-
property_definition.definition
property_definition
represented_definition = property_definition
represented_definition <-
property_definition_representation.definition
property_definition_representation
property_definition_representation.used_representation ->
{representation
representation.name = 'system coating and lining'}
representation
representation.items[i] ->
{representation_item
representation_item.name = 'coating'}
representation_item =>
descriptive_representation_item
descriptive_representation_item.description

5.1.14.39.2 corrosion_allowance

AIM element: [measure_with_unit.value_component]
[measure_with_unit.unit_component]

Source: 41

Reference path: piping_component_definition <=
product_definition
characterized_product_definition = product_definition
characterized_product_definition
characterized_definition = characterized_product_definition
characterized_definition <-
property_definition.definition
property_definition
represented_definition = property_definition
represented_definition <-
property_definition_representation.definition
property_definition_representation
property_definition_representation.used_representation ->
{representation
representation.name = 'system coating and lining'}
representation
(representation.items[i] ->
{representation_item
(representation_item.name = 'corrosion allowance')
(representation_item.name = 'maximum corrosion allowance')
(representation_item.name = 'minimum corrosion allowance')})
([representation.items[i] ->
{representation_item
representation_item.name = 'maximum corrosion allowance'}]
[representation.items[i] ->
{representation_item

© ISO 2001 – All rights reserved

representation_item.name = 'minimum corrosion allowance'}])
representation_item =>
measure_representation_item <=
measure_with_unit
[measure_with_unit.value_component]
[measure_with_unit.unit_component]

5.1.14.39.3 heat_tracing_type

AIM element: (heat_tracing_representation)
([heat_tracing_representation]
[document_usage_constraint.subject_element_value])

Source: 227

Reference path: piping_component_definition <=
product_definition
characterized_product_definition = product_definition
characterized_product_definition
characterized_definition = characterized_product_definition
characterized_definition <-
property_definition.definition
property_definition
represented_definition = property_definition
represented_definition <-
property_definition_representation.definition
property_definition_representation
property_definition_representation.used_representation ->
representation =>
(heat_tracing_representation)
([heat_tracing_representation]
[heat_tracing_representation
document_item = heat_tracing_representation
document_item <-
applied_document_reference.items[i]
applied_document_reference <=
document_reference
document_reference.assigned_document ->
document <-
document_usage_constraint.source
document_usage_constraint
document_usage_constraint.subject_element_value])
41

5.1.14.39.4 lining

AIM element: descriptive_representation_item.description

Source: 45

Reference path: piping_component_definition <=
product_definition
characterized_product_definition = product_definition

© ISO 2001 – All rights reserved

characterized_product_definition
characterized_definition = characterized_product_definition
characterized_definition <-
property_definition.definition
property_definition
represented_definition = property_definition
represented_definition <-
property_definition_representation.definition
property_definition_representation
property_definition_representation.used_representation ->
{representation
representation.name = 'system coating and lining'}
representation
representation.items[i] ->
{representation_item
representation_item.name = 'lining'}
representation_item =>
descriptive_representation_item
descriptive_representation_item.description

5.1.14.39.5 piping_system_component to equipment_trim_piping

AIM element: PATH

Reference path: piping_component_definition <=
product_definition <-
product_definition_relationship.related_product_definition
{product_definition_relationship
product_definition_relationship.name = 'trim piping'}
product_definition_relationship

5.1.14.39.6 piping_system_component to line_piping_system_component_-assignment

AIM element: PATH

Reference path: piping_component_definition <=
product_definition <-
product_definition_relationship.related_product_definition
{product_definition_relationship
product_definition_relationship.name = 'realization'}
product_definition_relationship

5.1.14.39.7 piping_system_component to piping_size_description

AIM element: PATH

Rules: subtype_mandatory_shape_representation

Reference path: piping_component_definition <=
product_definition
characterized_product_definition = product_definition

© ISO 2001 – All rights reserved

characterized_product_definition
characterized_definition = characterized_product_definition
characterized_definition <-
property_definition.definition
{property_definition =>
product_definition_shape}
property_definition
represented_definition = property_definition
represented_definition <-
property_definition_representation.definition
{property_definition_representation =>
shape_definition_representation}
property_definition_representation
property_definition_representation.used_representation ->
representation =>
shape_representation =>
shape_dimension_representation

5.1.14.40 Plain_washer

AIM element: bolt_and_nut_component_definition

Source: 227

Rules: dependent_instantiable_product_context
product_context_discipline_type_constraint
value_for_application_context

Reference path: bolt_and_nut_component_definition <=
product_definition
{bolt_and_nut_component_definition
classification_item = piping_support_definition
classification_item <-
applied_classification_assignment.items[i]
applied_classification_assignment <=
classification_assignment
classification_assignment.assigned_classification ->
[group =>
bolt_and_nut_component_class]
[group
group.name = 'plain washer']
[group <-
group_relationship.related_group
group_relationship
{group_relationship.name = 'class hierarchy'}
group_relationship.relating_group ->
group
{[group.name = 'washer']
[group =>
bolt_and_nut_component_class]}}
{product_definition
product_definition.formation ->
product_definition_formation
product_definition_formation.of_product ->

© ISO 2001 – All rights reserved

[product
classification_item = product
classification_item <-
applied_classification_assignment.items[i]
applied_classification_assignment <=
classification_assignment
classification_assignment.assigned_classification ->
(group)
(group <-
group_relationship.related_group
group_relationship
group_relationship.relating_group ->
group)
group.name = 'bolt and nut component']
[product
product.frame_of_reference[i] ->
product_context <=
application_context_element
application_context_element.name = 'plant item']})

5.1.14.40.1 thickness

AIM element: [measure_with_unit.value_component]
[measure_with_unit.unit_component]

Source: 41

Rules: subtype_mandatory_shape_representation

Reference path: bolt_and_nut_component_definition <=
product_definition
characterized_product_definition = product_definition
characterized_product_definition
characterized_definition = characterized_product_definition
characterized_definition <-
property_definition.definition
property_definition =>
product_definition_shape <-
shape_aspect.of_shape
[shape_aspect <-
shape_aspect_relationship.relating_shape_aspect]
[shape_aspect <-
shape_aspect_relationship.related_shape_aspect]
shape_aspect_relationship =>
dimensional_location
dimensional_characteristic = dimensional_location
dimensional_characteristic <-
dimensional_characteristic_representation.dimension
dimensional_characteristic_representation
dimensional_characteristic_representation.representation ->
shape_dimension_representation <=
shape_representation <=
{representation
representation.name = 'plain washer dimensional shape'}

© ISO 2001 – All rights reserved

representation
representation.items[i] ->
representation_item =>
{representation_item.name = 'thickness'}
measure_representation_item <=
{measure_with_unit =>
length_measure_with_unit}
measure_with_unit
[measure_with_unit.value_component]
[measure_with_unit.unit_component]

5.1.14.40.2 outside_diameter

AIM element: [measure_with_unit.value_component]
[measure_with_unit.unit_component]

Source: 41

Rules: subtype_mandatory_shape_representation

Reference path: bolt_and_nut_component_definition <=
product_definition
characterized_product_definition = product_definition
characterized_product_definition
characterized_definition = characterized_product_definition
characterized_definition <-
property_definition.definition
property_definition =>
product_definition_shape <-
shape_aspect.of_shape
[shape_aspect <-
shape_aspect_relationship.relating_shape_aspect]
[shape_aspect <-
shape_aspect_relationship.related_shape_aspect]
shape_aspect_relationship =>
dimensional_location
dimensional_characteristic = dimensional_location
dimensional_characteristic <-
dimensional_characteristic_representation.dimension
dimensional_characteristic_representation
dimensional_characteristic_representation.representation ->
shape_dimension_representation <=
shape_representation <=
{representation
representation.name = 'plain washer dimensional shape'}
representation
representation.items[i] ->
representation_item =>
{representation_item.name = 'outside diameter'}
measure_representation_item <=
{measure_with_unit =>
length_measure_with_unit}
measure_with_unit

© ISO 2001 – All rights reserved

[measure_with_unit.value_component]
[measure_with_unit.unit_component]

5.1.14.41 Planned_physical_plant_item

AIM element: (product_definition)
(externally_defined_plant_item_definition)

Source: 41, 227

Rules: dependent_instantiable_product_context
product_context_discipline_type_constraint
value_for_application_context

Reference path: (product_definition)
(externally_defined_plant_item_definition <=
[product_definition]
[externally_defined_item])
{product_definition
[product_definition.formation ->
product_definition_formation
product_definition_formation.of_product ->
product
product.frame_of_reference[i] ->
product_context<=
application_context_element
application_context_element.name = 'plant item']
[product_definition.frame_of_reference ->
product_definition_context <=
application_context_element
(application_context_element.name = 'functional occurrence')
(application_context_element.name = 'physical occurrence')]}

5.1.14.41.1 stock_code

AIM element: identification_assignment.assigned_id

Source: 41

Reference path: (product_definition)
(externally_defined_plant_item_definition <=
[product_definition]
[externally_defined_item])
product_definition
identified_item = product_definition
identification_assignment.items[i] ->
{identification_assignment
identification_assignment.role ->
identification_role
identification_role.name = 'stock code'}
identification_assignment
identification_assignment.assigned_id

© ISO 2001 – All rights reserved

5.1.14.41.2 global_unambiguous_identifier

AIM element: identification_assignment.assigned_id

Source: 41

Reference path: (product_definition)
(externally_defined_plant_item_definition <=
[product_definition]
[externally_defined_item])
product_definition
identified_item = product_definition
identification_assignment.items[i] ->
{identification_assignment
identification_assignment.role ->
identification_role
identification_role.name = 'global unambiguous identifier'}
identification_assignment
identification_assignment.assigned_id

5.1.14.41.3 planned_physical_plant_item to plant_item_connector_-occurrence

AIM element: PATH

Reference path: (product_definition)
(externally_defined_plant_item_definition <=
product_definition)
characterized_product_definition = product_definition
characterized_product_definition
characterized_definition = characterized_product_definition
characterized_definition <-
property_definition.definition
property_definition =>
product_definition_shape <-
shape_aspect.of_shape
shape_aspect =>
plant_item_connector

5.1.14.41.4 planned_physical_plant_item to piping_spool_assignment

AIM element: PATH

Reference path: (product_definition <-)
(externally_defined_plant_item_definition <=
product_definition <-)
product_definition_relationship.related_product_definition
product_definition_relationship =>
product_definition_usage

5.1.14.41.5 planned_physical_plant_item to support_usage (supported by)

© ISO 2001 – All rights reserved

AIM element: PATH

Reference path: (product_definition <-)
(externally_defined_plant_item_definition <=
product_definition <-)
product_definition_relationship.related_product_definition
{product_definition_relationship
(product_definition_relationship.name = 'support usage')
(product_definition_relationship.name = 'support usage connection')}
product_definition_relationship

5.1.14.41.6 planned_physical_plant_item to support_usage (supports)

AIM element: PATH

Reference path: (product_definition <-)
(externally_defined_plant_item_definition <=
product_definition <-)
product_definition_relationship.relating_product_definition
{product_definition_relationship
(product_definition_relationship.name = 'support usage')
(product_definition_relationship.name = 'support usage connection')}
product_definition_relationship

5.1.14.42 Plant_item

AIM element: (product_definition)
(externally_defined_plant_item_definition)
(product)

Source: 41, 227

Rules: dependent_instantiable_product_context
product_context_discipline_type_constraint
value_for_application_context

Reference path: (product_definition)
(externally_defined_plant_item_definition <=
[product_definition]
[externally_defined_item])
(product)
{(product_definition
product_definition.formation ->
product_definition_formation
product_definition_formation.of_product ->
product)
(product)
product.frame_of_reference[i] ->
[product_context
product_context.discipline_type = 'process plant']
[product_context <=
application_context_element
application_context_element.name = 'plant item']}

© ISO 2001 – All rights reserved

{(product <-
product_definition_formation.of_product
product_definition_formation <-
product_definition.formation
product_definition)
(product_definition)
product_definition.frame_of_reference ->
product_definition_context
(product_definition_context.life_cycle_stage = 'physical design')
(product_definition_context.life_cycle_stage = 'functional design')}

5.1.14.42.1 description

AIM element: product.description

Source: 41

Reference path: (product_definition)
(externally_defined_plant_item_definition <=
product_definition)
product_definition.formation ->
product_definition_formation
product_definition_formation.of_product ->
product
product.description

5.1.14.42.2 name

AIM element: product.name

Source: 41

Reference path: (product_definition)
(externally_defined_plant_item_definition <=
product_definition)
product_definition.formation ->
product_definition_formation
product_definition_formation.of_product ->
product
product.name

5.1.14.42.3 plant_item_id

AIM element: product.id

Source: 41

Reference path: (product_definition)
(externally_defined_plant_item_definition <=
product_definition)
product_definition.formation ->
product_definition_formation
product_definition_formation.of_product ->

© ISO 2001 – All rights reserved

product
product.id

5.1.14.42.4 status

AIM element: group.name

Source: 41

Reference path: (product_definition)
(externally_defined_plant_item_definition <= product_definition)
classification_item = product_definition
classification_item <- applied_classification_assignment.items[i]
applied_classification_assignment <= {classification_assignment
classification_assignment.role -> group_role
group_role.name = 'plant item status'}
classification_assignment
classification_assignment.assigned_classification -> group
group.name

5.1.14.42.5 type

AIM element: group.name

Source: 41

Reference path: (product_definition)
(externally_defined_plant_item_definition <= product_definition)
product_definition.formation -> product_definition_formation
product_definition_formation.of_product -> product classification_item = product
classification_item <- applied_classification_assignment.items[i]
applied_classification_assignment <= {classification_assignment
classification_assignment.role -> classification_role
classification_role.name = 'plant item type classification'}
classification_assignment
classification_assignment.assigned_classification -> group
group.name

5.1.14.42.6 plant_item to changed_plant_item

© ISO 2001 – All rights reserved

AIM element: IDENTICAL MAPPING

5.1.14.42.7 plant_item to external_classification

AIM element: PATH

Reference path: (product_definition)
(externally_defined_plant_item_definition <=
product_definition)
classification_item = product_definition
classification_item <-
applied_classification_assignment.items[i]
applied_classification_assignment <=
classification_assignment
classification_assignment.assigned_classification ->
group =>
externally_defined_class

5.1.14.42.8 plant_item to insulation

AIM element: PATH

Reference path: (product_definition <-)
(externally_defined_plant_item_definition <=
product_definition <-)
(product <-
product_definition_formation.of_product
product_definition_formation <-
product_definition.formation
product_definition <-)
product_definition_relationship.relating_product_definition
{product_definition_relationship
product_definition_relationship.name = 'item insulation'}
product_definition_relationship
product_definition_relationship.related_product_definition ->
product_definition
product_definition.formation ->
product_definition_formation
product_definition_formation.of_product ->
product
{product
classification_item = product
classification_item <-
applied_classification_assignment.items[i]
applied_classification_assignment <=
classification_assignment
classification_assignment.assigned_classification ->
group
group.name = 'insulation'}

5.1.14.42.9 plant_item to plant_item_collection (element)

© ISO 2001 – All rights reserved

AIM element: PATH

Reference path: (product_definition <-)
(externally_defined_plant_item_definition <=
product_definition <-)
(product <-
product_definition_formation.of_product
product_definition_formation <-
product_definition.formation
product_definition <-)
product_definition_relationship.related_product_definition
product_definition_relationship

5.1.14.42.10 plant_item to plant_item_collection (group)

AIM element: PATH

Reference path: (product_definition <-)
(externally_defined_plant_item_definition <=
product_definition <-)
(product <-
product_definition_formation.of_product
product_definition_formation <-
product_definition.formation
product_definition <-)
product_definition_relationship.relating_product_definition
product_definition_relationship

5.1.14.42.11 plant_item to plant_item_design_view

AIM element: (IDENTICAL MAPPING)
(PATH)

Source:

Reference path: product <-
product_definition_formation.of_product
product_definition_formation <-
product_definition.formation
(product_definition)
(product_definition =>
externally_defined_plant_item_definition)

5.1.14.42.12 plant_item to plant_item_shape

AIM element: PATH

Reference path: (product_definition)
(externally_defined_plant_item_definition <=
product_definition)
(product <-
product_definition_formation.of_product
product_definition_formation <-

© ISO 2001 – All rights reserved

product_definition.formation
product_definition)
characterized_product_definition = product_definition
characterized_product_definition
characterized_definition = characterized_product_definition
characterized_definition <-
property_definition.definition
property_definition =>
product_definition_shape

5.1.14.42.13 plant_item to plant_item_weight

AIM element: PATH

Reference path: (product_definition)
(externally_defined_plant_item_definition <=
product_definition)
(product <-
product_definition_formation.of_product
product_definition_formation <-
product_definition.formation
product_definition)
characterized_product_definition = product_definition
characterized_product_definition
characterized_definition = characterized_product_definition
characterized_definition <-
property_definition.definition
property_definition
represented_definition = property_definition
represented_definition <-
property_definition_representation.definition
property_definition_representation =>
plant_item_weight_representation

5.1.14.42.14 plant_item to reference_geometry

AIM element: PATH

Reference path: (product_definition)
(externally_defined_plant_item_definition <=
product_definition)
(product <-
product_definition_formation.of_product
product_definition_formation <-
product_definition.formation
product_definition)
characterized_product_definition = product_definition
characterized_product_definition
characterized_definition = characterized_product_definition
characterized_definition <-
property_definition.definition
property_definition =>
product_definition_shape <-

© ISO 2001 – All rights reserved

shape_aspect.of_shape
shape_aspect =>
derived_shape_aspect =>
reference_geometry

5.1.14.42.15 plant_item to required_material_description

#1: The quantity is not known or not yet specified.

#2: The quantity is known.

AIM element: PATH

Reference path: (product_definition <-)
(externally_defined_plant_item_definition <=
product_definition <-)
(product <-
product_definition_formation.of_product
product_definition_formation <-
product_definition.formation
product_definition <-)
product_definition_relationship.relating_product_definition
{product_definition_relationship =>
#1: (product_definition_usage)
#2: (product_definition_usage =>
make_from_usage_option)}
product_definition_relationship
product_definition_relationship.related_product_definition ->
product_definition

5.1.14.42.16 plant_item to spare_plant_item_usage (as primary)

AIM element: PATH

Reference path: (product_definition <-)
(externally_defined_plant_item_definition <=
product_definition <-)
(product <-
product_definition_formation.of_product
product_definition_formation <-
product_definition.formation
product_definition <-)
product_definition_relationship.related_product_definition
product_definition_relationship
{product_definition_relationship
product_definition_relationship.name = 'spare plant item usage'}

5.1.14.42.17 plant_item to spare_plant_item_usage (as spare)

AIM element: PATH

Reference path: (product_definition <-)
(externally_defined_plant_item_definition <=

© ISO 2001 – All rights reserved

product_definition <-)
(product <-
product_definition_formation.of_product
product_definition_formation <-
product_definition.formation
product_definition <-)
product_definition_relationship.related_product_definition
product_definition_relationship
{product_definition_relationship
product_definition_relationship.name = 'spare plant item usage'}

5.1.14.42.18 plant_item to analysis_data_point

AIM element: PATH

Reference path: (product_definition)
(externally_defined_plant_item_definition <=
product_definition)
(product <-
product_definition_formation.of_product
product_definition_formation <-
product_definition.formation
product_definition)
characterized_product_definition = product_definition
characterized_product_definition
characterized_definition = characterized_product_definition
characterized_definition <-
property_definition.definition
property_definition =>
product_definition_shape <-
shape_aspect.of_shape
shape_aspect
{shape_aspect.description = 'analysis data point'}

5.1.14.43 Plant_item_collection

AIM element: product_definition_relationship

Source: 41

Reference path: {product_definition_relationship
[product_definition_relationship.relating_product_definition ->]
[product_definition_relationship.related_product_definition ->]
(product_definition)
(product_definition =>
externally_defined_plant_item_definition)}

5.1.14.43.1 location_and_orientation

AIM element: (axis2_placement_2d)
(axis2_placement_3d)

© ISO 2001 – All rights reserved

Source: 42

Reference path: product_definition_relationship
characterized_product_definition = product_definition_relationship
characterized_product_definition
characterized_definition = characterized_product_definition
characterized_definition <-
property_definition.definition
property_definition
represented_definition = property_definition
represented_definition <-
property_definition_representation.definition
property_definition_representation
property_definition_representation.used_representation ->
representation
representation.items[i] ->
representation_item =>
geometric_representation_item =>
placement =>
(axis2_placement_2d)
(axis2_placement_3d)

5.1.14.43.2 usage_type

AIM element: product_definition_relationship.name

Source: 41

5.1.14.43.3 plant_item_collection to changed_plant_item_collection

AIM element: IDENTICAL MAPPING

5.1.14.44 Plant_item_definition

AIM element: (product_definition)
(externally_defined_plant_item_definition)

Source: 41, 227

Rules: dependent_instantiable_product_context
product_context_discipline_type_constraint
value_for_application_context

Reference path: (product_definition)
(externally_defined_plant_item_definition <=
[product_definition]
[externally_defined_item])
{product_definition
[product_definition.formation ->
product_definition_formation
product_definition_formation.of_product ->
product
product.frame_of_reference[i] ->

© ISO 2001 – All rights reserved

product_context<=
application_context_element
application_context_element.name = 'plant item']
[product_definition.frame_of_reference ->
product_definition_context <=
application_context_element
(application_context_element.name = 'functional definition')
(application_context_element.name = 'physical definition')]}

5.1.14.44.1 plant_item_definition to catalogue_item (is defined as)

#1: Instances of the definition use the same catalogue item.

#2: Instances of the definition use different catalogue items.

AIM element: PATH

Reference path: (product_definition <-)
(externally_defined_plant_item_definition <=
product_definition <-)
#1: (product_definition_relationship.related_product_definition
{product_definition_relationship
product_definition_relationship.name = 'catalogue usage'}
product_definition_relationship
product_definition_relationship.relating_product_definition ->)
#2: (product_definition_relationship.relating_product_definition
{product_definition_relationship
product_definition_relationship.name = 'definition usage'}
product_definition_relationship
product_definition_relationship.related_product_definition ->
{product_definition
product_definition.frame_of_reference ->
product_definition_context <=
application_context_element
(application_context_element.name = 'physical occurrence')
(application_context_element.name = 'functional occurrence')}
(product_definition <-)
({product_definition =>
externally_defined_plant_item_definition}
product_definition <-)
product_definition_relationship.related_product_definition
{product_definition_relationship
product_definition_relationship.name = 'catalogue usage'}
product_definition_relationship
product_definition_relationship.relating_product_definition ->)
product_definition =>
externally_defined_plant_item_definition =>
catalogue_item

5.1.14.44.2 plant_item_definition to connector_definition

AIM element: PATH

© ISO 2001 – All rights reserved

Reference path: (product_definition)
(externally_defined_plant_item_definition <=
product_definition)
characterized_product_definition = product_definition
characterized_product_definition
characterized_definition = characterized_product_definition
characterized_definition <-
property_definition.definition
property_definition =>
product_definition_shape <-
shape_aspect.of_shape
shape_aspect =>
plant_item_connector

5.1.14.44.3 plant_item_definition to planned_physical_plant_item

#1: The definition is physical.

#2: The definition is functional.

AIM element: PATH

Rules: application_context_requires_ap_definition
dependent_instantiable_application_context
dependent_instantiable_product_definition_context
product_definition_context_name_constraint
product_definition_usage_constraint

Reference path: #1: ((product_definition <-)
(externally_defined_plant_item_definition <=
product_definition <-)
{product_definition
product_definition.frame_of_reference ->
product_definition_context <=
application_context_element
application_context_element.name = 'physical definition'}
product_definition_relationship.relating_product_definition
{product_definition_relationship
product_definition_relationship.name = 'definition usage'}
product_definition_relationship
product_definition_relationship.related_product_definition ->
{product_definition
product_definition.frame_of_reference ->
product_definition_context <=
application_context_element
application_context_element.name = 'physical occurrence'}
(product_definition)
(product_definition =>
externally_defined_plant_item_definition))
#2: ((product_definition <-)
(externally_defined_plant_item_definition <=
product_definition <-)
{product_definition
product_definition.frame_of_reference ->

© ISO 2001 – All rights reserved

product_definition_context <=
application_context_element
application_context_element.name = 'functional definition'}
product_definition_relationship.relating_product_definition
{product_definition_relationship
product_definition_relationship.name = 'definition usage'}
product_definition_relationship
product_definition_relationship.related_product_definition ->
{product_definition
product_definition.frame_of_reference ->
product_definition_context <=
application_context_element
application_context_element.name = 'functional occurrence'}
(product_definition)
(product_definition =>
externally_defined_plant_item_definition))

5.1.14.45 Plant_item_design_view

AIM element: (product_definition)
(externally_defined_plant_item_definition)

Source: 41, 227

Rules: dependent_instantiable_product_context
product_context_discipline_type_constraint
value_for_application_context

Reference path: (product_definition)
(externally_defined_plant_item_definition <=
[externally_defined_item]
[product_definition])
{product_definition
[product_definition.formation ->
product_definition_formation
product_definition_formation.of_product ->
product
product.frame_of_reference[i] ->
product_context<=
application_context_element
application_context_element.name = 'plant item']
[product_definition.frame_of_reference ->
[product_definition_context <=
application_context_element
(application_context_element.name = 'functional definition')
(application_context_element.name = 'functional occurrence')
(application_context_element.name = 'physical definition')
(application_context_element.name = 'physical occurrence')]
[product_definition_context
(product_definition_context.life_cycle_stage = 'physical design')
(product_definition_context.life_cycle_stage = 'functional design')]]}

© ISO 2001 – All rights reserved

5.1.14.46 Plant_item_instance

AIM element: (product_definition)
(externally_defined_plant_item_definition)

Source: 41, 227

Rules: dependent_instantiable_product_context
product_context_discipline_type_constraint
value_for_application_context

Reference path: (product_defintion)
(externally_defined_plant_item_definition <=
[product_definition]
[externally_defined_item])
{product_definition
[product_definition.formation ->
product_definition_formation
product_definition_formation.of_product ->
product
product.frame_of_reference[i] ->
product_context<=
application_context_element
application_context_element.name = 'plant item']
[product_definition.frame_of_reference ->
product_definition_context <=
application_context_element
(application_context_element.name = 'functional occurrence')
(application_context_element.name = 'physical occurrence')]}

5.1.14.46.1 plant_item_instance to plant_item_interference (first item)

AIM element: PATH

Reference path: (product_definition <-)
(externally_defined_plant_item_definition <=
product_definition <-)
product_definition_relationship.relating_product_definition
product_definition_relationship =>
plant_item_interference

5.1.14.46.2 plant_item_instance to plant_item_interference(second item)

AIM element: PATH

Reference path: (product_definition <-)
(externally_defined_plant_item_definition <=
product_definition <-)
product_definition_relationship.related_product_definition
product_definition_relationship =>
plant_item_interference

© ISO 2001 – All rights reserved

5.1.14.46.3 plant_item_instance to plant_item_location

#1: The plant item is placed relative to another plant item.

#2a: The plant item is placed in a building, plant, or site.

#2b: The plant item is defined in the coordinate space of a building, plant, or site.

AIM element: PATH

Rules: subtype_mandatory_shape_representation

Reference path:

```
(product_definition)
(externally_defined_plant_item_definition <=
product_definition)
characterized_product_definition = product_definition
characterized_product_definition
characterized_definition = characterized_product_definition
characterized_definition <-
property_definition.definition
{property_definition =>
product_definition_shape}
property_definition
represented_definition = property_definition
represented_definition <-
property_definition_representation.definition
{property_definition_representation =>
shape_definition_representation}
property_definition_representation
property_definition_representation.used_representation ->
{representation =>
shape_representation}
#1: (representation <-
representation_map.mapped_representation
representation_map <-
mapped_item.mapping_source
mapped_item
{mapped_item <=
representation_item
representation_item.name = 'relative item location'})
#2a: (
representation
representation.items[i] ->
{representation_item
representation_item.name = 'placed shape'}
representation_item =>
mapped_item
mapped_item.mapping_target ->
representation_item =>
geometric_representation_item =>
placement =>
(axis2_placement_2d)
(axis2_placement_3d))
#2b: (
```


© ISO 2001 – All rights reserved

representation
representation.items[i] ->
representation_item =>
geometric_representation_item =>
placement =>
(axis2_placement_2d)
(axis2_placement_3d))

5.1.14.46.4 plant_item_instance to project_design_assignment

AIM element: PATH

Reference path: (product_definition)
(externally_defined_plant_item_definition <=
product_definition)
design_project_item = product_definition
design_project_item <-
design_project_assignment.items[i]
design_project_assignment

5.1.14.46.5 plant_item_instance to relative_item_location

AIM element: PATH

Reference path: (product_definition)
(externally_defined_plant_item_definition <=
product_definition)
characterized_product_definition = product_definition
characterized_product_definition
characterized_definition = characterized_product_definition
characterized_definition <-
property_definition.definition
{property_definition =>
product_definition_shape}
property_definition
represented_definition = property_definition
represented_definition <-
property_definition_representation.definition
property_definition_representation
property_definition_representation.used_representation ->
representation
representation.items[i] ->
{representation_item =>
geometric_representation_item =>
placement =>
(axis2_placement_2d)
(axis2_placement_3d)}
representation_item <-
mapped_item.mapping_target
mapped_item
{mapped_item <=
representation_item

© ISO 2001 – All rights reserved

representation_item.name = 'relative item location'}

5.1.14.47 Plant_item_location

#1: The plant item is placed relative to another plant item.

#2: The plant item is placed in a building, plant, or site.

AIM element: #1: (mapped_item)
#2: ((axis2_placement_2d)
(axis2_placement_3d))

Source: 43, 42

5.1.14.47.1 location_and_orientation

#1: The plant item is placed relative to another plant item.

#2: The plant item is placed in a building, plant, or site.

AIM element: [(axis2_placement_2d)
(axis2_placement_3d)]
[cartesian_point]

Source: 42

Reference path: #1: (mapped_item
mapped_item.mapping_target ->
representation_item =>
geometric_representation_item =>
[placement =>
(axis2_placement_2d)
(axis2_placement_3d)]
[placement
placement.location ->
cartesian_point])
#2: ([(axis2_placement_2d)
(axis2_placement_3d)]
[(axis2_placement_2d <=)
(axis2_placement_3d <=)
placement
placement.location ->
cartesian_point])

5.1.14.47.2 location_id

#1: The plant item is placed relative to another plant item.

#2: The plant item is placed in a building, plant, or site.

AIM element: representation_item.name

© ISO 2001 – All rights reserved

Source: 43

Reference path: #1: (mapped_item
mapped_item.mapping_target ->
{representation_item =>
geometric_representation_item =>
placement =>
(axis2_placement_2d)
(axis2_placement_3d)})
#2: ((axis2_placement_2d <=)
(axis2_placement_3d <=)
placement <=
geometric_representation_item <=)
representation_item
representation_item.name

5.1.14.47.3 plant_item_location to changed_plant_item_location

#1: The plant item is placed relative to another plant item.

#2: The plant item is placed in a building, plant, or site.

AIM element: #1: (PATH)
#2: (IDENTICAL MAPPING)

Source:

Reference path: #1: mapped_item
mapped_item.mapping_target ->
representation_item =>
geometric_representation_item =>
placement =>
(axis2_placement_2d
{axis2_placement_2d
change_item = axis2_placement_2d})
(axis2_placement_3d
{axis2_placement_3d
change_item = axis2_placement_3d})

5.1.14.48 Plant_item_weight

AIM element: plant_item_weight_representation

Source: 227

Reference path: plant_item_weight_representation <=
property_definition_representation
{property_definition_representation
property_definition_representation.used_representation ->
representation
representation.name = 'item weight'}

© ISO 2001 – All rights reserved

5.1.14.48.1 centre_of_gravity

AIM element: geometric_representation_item

Source: 42

Reference path: plant_item_weight_representation <=
property_definition_representation
property_definition_representation.used_representation ->
representation
representation.items[i] ->
{representation_item
representation_item.name = 'centre of gravity'}
representation_item =>
geometric_representation_item

5.1.14.48.2 weight_state

AIM element: type_qualifier.name

Source: 45

Reference path: plant_item_weight_representation <=
property_definition_representation
property_definition_representation.used_representation ->
representation
representation.items[i] ->
({[representation_item
representation_item.name = 'weight value']
[representation_item =>
measure_representation_item]}
representation_item =>
qualified_representation_item
qualified_representation_item.qualifiers[i] ->
value_qualifier
value_qualifier = type_qualifier
type_qualifier
{(type_qualifier.name = 'empty')
(type_qualifier.name = 'full')
(type_qualifier.name = 'operating')
(type_qualifier.name = 'shipping')
(type_qualifier.name = 'test')})
({[representation_item
(representation_item.name = 'maximum weight value')
(representation_item.name = 'minimum weight value')]
[representation_item =>
measure_representation_item]}
representation_item =>
qualified_representation_item
qualified_representation_item.qualifiers[i] ->
value_qualifier
value_qualifier = type_qualifier
type_qualifier

© ISO 2001 – All rights reserved

type_qualifier.name = 'operating'})

5.1.14.48.3 weight_value

AIM element: [measure_with_unit.value_component]
[measure_with_unit.unit_component]

Source: 41

Reference path: plant_item_weight_representation <=
property_definition_representation
property_definition_representation.used_representation ->
representation
(representation.items[i] ->
{representation_item
(representation_item.name = 'weight value')
(representation_item.name = 'maximum weight value')
(representation_item.name = 'minimum weight value')})
([representation.items[i] ->
{representation_item
representation_item.name = 'maximum weight value'}]
[representation.items[i] ->
{representation_item
representation_item.name = 'minimum weight value'}])
{representation_item =>
qualified_representation_item}
representation_item =>
measure_representation_item <=
measure_with_unit
[measure_with_unit.value_component]
[{measure_with_unit.unit_component ->
unit
unit = derived_unit}
measure_with_unit.unit_component]

5.1.14.49 Plant_volume

AIM element: (plant_item_route)
(reserved_space)
(system_space)
(product_definition_shape)
(shape_aspect)

Source: 227

Rules: dependent_instantiable_product_context
product_context_discipline_type_constraint
value_for_application_context

Reference path: ((plant_item_route <=
product_definition_shape)
(product_definition_shape)
{product_definition_shape <=

© ISO 2001 – All rights reserved

property_definition
property_definition.definition ->
characterized_definition
characterized_definition = characterized_product_definition
characterized_product_definition
characterized_product_definition = product_definition
product_definition
product_definition.formation ->
product_definition_formation
product_definition_formation.of_product ->
product
product.frame_of_reference[i] ->
product_context<=
application_context_element
application_context_element.name = 'plant item'})
((reserved_space <=
shape_aspect)
(shape_aspect)
{shape_aspect
shape_aspect.of_shape ->
product_definition_shape <=
property_definition
property_definition.definition ->
characterized_definition
characterized_definition = characterized_product_definition
characterized_product_definition
characterized_product_definition = product_definition
product_definition
product_definition.formation ->
product_definition_formation
product_definition_formation.of_product ->
product
product.frame_of_reference[i] ->
product_context<=
application_context_element
application_context_element.name = 'plant item'})
(system_space <=
product_definition_shape
{product_definition_shape <=
property_definition
property_definition.definition ->
characterized_definition
characterized_definition = characterized_product_definition
characterized_product_definition
characterized_product_definition = product_definition
product_definition
product_definition.formation ->
product_definition_formation
product_definition_formation.of_product ->
product
product.frame_of_reference[i] ->
product_context<=
application_context_element

© ISO 2001 – All rights reserved

application_context_element.name = 'plant system'})

5.1.14.49.1 type

AIM element: (property_definition.name)
(shape_aspect.name)

Source: 41

Reference path: ((plant_item_route <=
product_definition_shape <=)
(system_space <=
product_definition_shape <=)
(product_definition_shape <=)
property_definition
property_definition.name)
((reserved_space <=
shape_aspect)
(shape_aspect)
shape_aspect.name)

5.1.14.50 Process_ducting

AIM element: piping_component_definition

Source: 227

Rules: dependent_instantiable_product_context
product_context_discipline_type_constraint
value_for_application_context

Reference path: piping_component_definition <=
product_definition
{product_definition
product_definition.formation ->
product_definition_formation
product_definition_formation.of_product ->
[product
classification_item = product
classification_item <-
applied_classification_assignment.items[i]
applied_classification_assignment <=
classification_assignment
classification_assignment.assigned_classification ->
[group
group.name = 'process ducting']
[group <-
group_relationship.related_group
{group_relationship
group_relationship.name = 'usage classification'}
group_relationship
group_relationship.relating_group ->

© ISO 2001 – All rights reserved

group
group.name = 'ducting component']]
[product
product.frame_of_reference[i] ->
product_context<=
application_context_element
application_context_element.name = 'plant item']}

5.1.14.50.1 gauge

AIM element: [measure_with_unit.value_component]
[measure_with_unit.unit_component]

Source: 41

Rules: subtype_mandatory_shape_representation

Reference path: piping_component_definition <=
product_definition
characterized_product_definition = product_definition
characterized_product_definition
characterized_definition = characterized_product_definition
characterized_definition <-
property_definition.definition
property_definition =>
product_definition_shape <-
shape_aspect.of_shape
[shape_aspect <-
shape_aspect_relationship.relating_shape_aspect]
[shape_aspect <-
shape_aspect_relationship.related_shape_aspect]
shape_aspect_relationship =>
dimensional_location
dimensional_characteristic = dimensional_location
dimensional_characteristic <-
dimensional_characteristic_representation.dimension
dimensional_characteristic_representation
dimensional_characteristic_representation.representation ->
shape_dimension_representation <=
shape_representation <=
{representation
representation.name = 'process ducting dimensional shape'}
representation
representation.items[i] ->
{representation_item
representation_item.name = 'gauge'}
representation_item =>
measure_representation_item <=
{measure_with_unit =>
length_measure_with_unit}
measure_with_unit
[measure_with_unit.value_component]
[measure_with_unit.unit_component]

© ISO 2001 – All rights reserved

5.1.14.51 Project_design_assignment

AIM element: design_project_assignment

Source: 227

Reference path: design_project_assignment <=
organization_assignment
{organization_assignment
organization_assignment.assigned_organization ->
organization =>
design_project}

5.1.14.52 Relative_item_location

AIM element: mapped_item

Source: 43

Reference path: {[mapped_item <=
representation_item
representation_item.name = 'relative item location']
[mapped_item
mapped_item.mapping_target ->
[representation_item =>
geometric_representation_item =>
placement =>
(axis2_placement_2d)
(axis2_placement_3d)]
[representation_item <-
representation.items[i]
representation <-
property_definition_representation.used_representation
property_definition_representation
property_definition_representation.definition ->
represented_definition
represented_definition = property_definition
property_definition
property_definition.definition ->
characterized_definition
characterized_definition = characterized_product_definition
characterized_product_definition
characterized_product_definition = product_definition
product_definition
product_definition.frame_of_reference ->
product_definition_context <=
application_context_element
(application_context_element.name = 'functional occurrence')
(application_context_element.name = 'physical occurrence')]]}

5.1.14.53 Required_material_description

© ISO 2001 – All rights reserved

AIM element: product_definition

Source: 41

Reference path: {product_definition
product_definition.frame_of_reference ->
{product_definition_context
product_definition_context.life_cycle_stage = 'requirement definition'}
product_definition_context =>
application_context_element
application_context_element.name = 'material'}

5.1.14.53.1 description

AIM element: property_definition.description

Source: 41

Reference path: product_definition
characterized_product_definition = product_definition
characterized_product_definition
characterized_definition = characterized_product_definition
characterized_definition <-
property_definition.definition
{property_definition =>
material_property}
property_definition <-
property_definition_relationship.relating_property_definition
{property_definition_relationship
property_definition_relationship.name = 'requirement allocation'}
property_definition_relationship
property_definition_relationship.related_property_definition ->
{property_definition =>
material_property =>
required_material_property}
property_definition
property_definition.description

5.1.14.53.2 material_requirement_id

AIM element: product.id

Source: 41

Reference path: product_definition
product_definition.formation ->
product_definition_formation
product_definition_formation.of_product ->
product
product.id

© ISO 2001 – All rights reserved

5.1.14.53.3 required_material_description to changed_required_material_-description

AIM element: IDENTICAL MAPPING

5.1.14.53.4 required_material_description to material_specification_-selection

AIM element: PATH

Reference path: product_definition
[characterized_product_definition = product_definition
characterized_product_definition
characterized_definition = characterized_product_definition
characterized_definition <-
property_definition.definition
property_definition =>
material_property]
[document_item = product_definition
document_item <-
applied_document_reference.items[i]
applied_document_reference <=
document_reference
document_reference.assigned_document ->
document]

5.1.14.54 Reserved_space

AIM element: reserved_space

Source: 227

Rules: dependent_instantiable_product_context
product_context_discipline_type_constraint
value_for_application_context

Reference path: reserved_space <=
shape_aspect
{shape_aspect
shape_aspect.of_shape ->
product_definition_shape <=
property_definition
property_definition.definition ->
characterized_definition
characterized_definition = characterized_product_definition
characterized_product_definition
characterized_product_definition = product_definition
product_definition
[product_definition.frame_of_reference ->
product_definition_context <=
application_context_element
(application_context_element.name = 'functional occurrence')

© ISO 2001 – All rights reserved

(application_context_element.name = 'physical occurrence')]
[product_definition.formation ->
product_definition_formation
product_definition_formation.of_product ->
product
product.frame_of_reference[i] ->
product_context<=
application_context_element
application_context_element.name = 'plant item']}

5.1.14.55 Route

AIM element: plant_item_route

Source: 227

Rules: dependent_instantiable_product_context
product_context_discipline_type_constraint
value_for_application_context

Reference path: plant_item_route <=
product_definition_shape
{product_definition_shape <=
property_definition
property_definition.definition ->
characterized_definition
characterized_definition = characterized_product_definition
characterized_product_definition
characterized_product_definition = product_definition
product_definition
[product_definition.frame_of_reference ->
product_definition_context <=
application_context_element
application_context_element.name = 'physical occurrence']
[product_definition.formation ->
product_definition_formation
product_definition_formation.of_product ->
product
product.frame_of_reference[i] ->
product_context<=
application_context_element
application_context_element.name = 'plant item']}

5.1.14.55.1 route to piping_system_line_segment

AIM element: PATH

Rules: product_definition_usage_constraint

Reference path: plant_item_route <=
product_definition_shape <=
property_definition
property_definition.definition ->

© ISO 2001 – All rights reserved

characterized_definition
characterized_definition = characterized_product_definition
characterized_product_definition
characterized_product_definition = product_definition
product_definition <-
product_definition_relationship.related_product_definition
product_definition_relationship
product_definition_relationship.relating_product_definition
product_definition =>
plant_line_segment_definition

5.1.14.56 Spare_plant_item_usage

AIM element: product_definition_relationship

Source: 41

Reference path: {product_definition_relationship
product_definition_relationship.name = 'spare plant item usage'}

5.1.14.57 Spring_washer

AIM element: bolt_and_nut_component_definition

Source: 227

Rules: dependent_instantiable_product_context
product_context_discipline_type_constraint
value_for_application_context

Reference path: bolt_and_nut_component_definition <=
product_definition
{bolt_and_nut_component_definition
classification_item = piping_support_definition
classification_item <-
applied_classification_assignment.items[i]
applied_classification_assignment <=
classification_assignment
classification_assignment.assigned_classification ->
[group =>
bolt_and_nut_component_class]
[group
group.name = 'spring washer']
[group <-
group_relationship.related_group
group_relationship
{group_relationship.name = 'class hierarchy'}
group_relationship.relating_group ->
group
{[group.name = 'washer']
[group =>
bolt_and_nut_component_class]}}
{product_definition

© ISO 2001 – All rights reserved

product_definition.formation ->
product_definition_formation
product_definition_formation.of_product ->
[product
classification_item = product
classification_item <-
applied_classification_assignment.items[i]
applied_classification_assignment <=
classification_assignment
classification_assignment.assigned_classification ->
(group)
(group <-
group_relationship.related_group
group_relationship
group_relationship.relating_group ->
group)
group.name = 'bolt and nut component']
[product
product.frame_of_reference[i] ->
product_context <=
application_context_element
application_context_element.name = 'plant item']})

5.1.14.57.1 thickness

AIM element: [measure_with_unit.value_component]
[measure_with_unit.unit_component]

Source: 41

Rules: subtype_mandatory_shape_representation

Reference path: bolt_and_nut_component_definition <=
product_definition
characterized_product_definition = product_definition
characterized_product_definition
characterized_definition = characterized_product_definition
characterized_definition <-
property_definition.definition
property_definition =>
product_definition_shape <-
shape_aspect.of_shape
[shape_aspect <-
shape_aspect_relationship.relating_shape_aspect]
[shape_aspect <-
shape_aspect_relationship.related_shape_aspect]
shape_aspect_relationship =>
dimensional_location
dimensional_characteristic = dimensional_location
dimensional_characteristic <-
dimensional_characteristic_representation.dimension
dimensional_characteristic_representation
dimensional_characteristic_representation.representation ->
shape_dimension_representation <=

© ISO 2001 – All rights reserved

shape_representation <=
{representation
representation.name = 'spring washer dimensional shape'}
representation
representation.items[i] ->
representation_item =>
{representation_item.name = 'thickness'}
measure_representation_item <=
{measure_with_unit =>
length_measure_with_unit}
measure_with_unit
[measure_with_unit.value_component]
[measure_with_unit.unit_component]

5.1.14.57.2 outside_diameter

AIM element: [measure_with_unit.value_component]
[measure_with_unit.unit_component]

Source: 41

Rules: subtype_mandatory_shape_representation

Reference path: bolt_and_nut_component_definition <=
product_definition
characterized_product_definition = product_definition
characterized_product_definition
characterized_definition = characterized_product_definition
characterized_definition <-
property_definition.definition
property_definition =>
product_definition_shape <-
shape_aspect.of_shape
[shape_aspect <-
shape_aspect_relationship.relating_shape_aspect]
[shape_aspect <-
shape_aspect_relationship.related_shape_aspect]
shape_aspect_relationship =>
dimensional_location
dimensional_characteristic = dimensional_location
dimensional_characteristic <-
dimensional_characteristic_representation.dimension
dimensional_characteristic_representation
dimensional_characteristic_representation.representation ->
shape_dimension_representation <=
shape_representation <=
{representation
representation.name = 'spring washer dimensional shape'}
representation
representation.items[i] ->
representation_item =>
{representation_item.name = 'outside diameter'}
measure_representation_item <=
{measure_with_unit =>

© ISO 2001 – All rights reserved

length_measure_with_unit}
measure_with_unit
[measure_with_unit.value_component]
[measure_with_unit.unit_component]

5.1.14.58 Structural_component

AIM element: product

Source: 41

Rules: dependent_instantiable_product_context
product_context_discipline_type_constraint
value_for_application_context

Reference path: {[product
classification_item = product
classification_item <-
applied_classification_assignment.items[i]
applied_classification_assignment <=
classification_assignment
classification_assignment.assigned_classification ->
group
group.name = 'structural component']
[product
product.frame_of_reference[i] ->
product_context<=
application_context_element
application_context_element.name = 'plant item']}

5.1.14.58.1 exact_section

AIM element: shape_aspect

Source: 41

Reference path: product <-
product_definition_formation.of_product
product_definition_formation <-
product_definition.formation
product_definition
characterized_product_definition = product_definition
characterized_product_definition
characterized_definition = characterized_product_definition
characterized_definition <-
property_definition.definition
property_definition =>
product_definition_shape <-
shape_aspect.of_shape
shape_aspect

© ISO 2001 – All rights reserved

5.1.14.58.2 size_designator

AIM element: descriptive_representation_item.description

Source: 45

Reference path: product <-
product_definition_formation.of_product
product_definition_formation <-
product_definition.formation
product_definition
characterized_product_definition = product_definition
characterized_product_definition
characterized_definition = characterized_product_definition
characterized_definition <-
property_definition.definition
property_definition
represented_definition = property_definition
represented_definition <-
property_definition_representation.definition
property_definition_representation
property_definition_representation.used_representation ->
{representation
document_item = representation
document_item <-
applied_document_reference.items[i]
applied_document_reference <=
document_reference
document_reference.assigned_document ->
document}
representation
representation.items[i] ->
{representation_item
representation_item.name = 'size designator'}
representation_item =>
descriptive_representation_item
descriptive_representation_item.description

5.1.14.58.3 type

AIM element: group.name

Source: 41

Reference path: product
classification_item = product
classification_item <-
applied_classification_assignment.items[i]
applied_classification_assignment <=
{classification_assignment
classification_assignment.role ->
classification_role
classification_role.name = 'structural component type classification'}
classification_assignment

© ISO 2001 – All rights reserved

classification_assignment.assigned_classification ->
group
group.name

5.1.14.59 Stud_bolt

AIM element: bolt_and_nut_component_definition

Source: 227

Rules: dependent_instantiable_product_context
product_context_discipline_type_constraint
value_for_application_context

Reference path: bolt_and_nut_component_definition <=
product_definition
{bolt_and_nut_component_definition
classification_item = piping_support_definition
classification_item <-
applied_classification_assignment.items[i]
applied_classification_assignment <=
classification_assignment
classification_assignment.assigned_classification ->
[group =>
bolt_and_nut_component_class]
[group
group.name = 'stud bolt']
[group <-
group_relationship.related_group
group_relationship
{group_relationship.name = 'class hierarchy'}
group_relationship.relating_group ->
group
{[group.name = 'bolt']
[group =>
bolt_and_nut_component_class]}}
{product_definition
product_definition.formation ->
product_definition_formation
product_definition_formation.of_product ->
[product
classification_item = product
classification_item <-
applied_classification_assignment.items[i]
applied_classification_assignment <=
classification_assignment
classification_assignment.assigned_classification ->
(group)
(group <-
group_relationship.related_group
group_relationship
group_relationship.relating_group ->
group)
group.name = 'bolt and nut component']

© ISO 2001 – All rights reserved

[product
product.frame_of_reference[i] ->
product_context <=
application_context_element
application_context_element.name = 'plant item']})

5.1.14.59.1 length

AIM element: [measure_with_unit.value_component]
[measure_with_unit.unit_component]

Source: 41

Rules: subtype_mandatory_shape_representation

Reference path: bolt_and_nut_component_definition <=
product_definition
characterized_product_definition = product_definition
characterized_product_definition
characterized_definition = characterized_product_definition
characterized_definition <-
property_definition.definition
property_definition =>
product_definition_shape <-
shape_aspect.of_shape
[shape_aspect <-
shape_aspect_relationship.relating_shape_aspect]
[shape_aspect <-
shape_aspect_relationship.related_shape_aspect]
shape_aspect_relationship =>
dimensional_location
dimensional_characteristic = dimensional_location
dimensional_characteristic <-
dimensional_characteristic_representation.dimension
dimensional_characteristic_representation
dimensional_characteristic_representation.representation ->
shape_dimension_representation <=
shape_representation <=
{representation
representation.name = 'stud bolt dimensional shape'}
representation
representation.items[i] ->
representation_item =>
{representation_item.name = 'length'}
measure_representation_item <=
{measure_with_unit =>
length_measure_with_unit}
measure_with_unit
[measure_with_unit.value_component]
[measure_with_unit.unit_component]

5.1.14.60 Supplied_equipment

© ISO 2001 – All rights reserved

AIM element: product

Source: 41

Reference path: {[product <-
product_definition_formation.of_product
product_definition_formation =>
product_definition_formation_with_specified_source
product_definition_formation_with_specified_source.make_or_buy = 'BUY']
[product
classification_item = product
classification_item <-
applied_classification_assignment.items[i]
applied_classification_assignment <=
classification_assignment
classification_assignment.assigned_classification ->
group
group.name = 'equipment']}

5.1.14.60.1 delivery_date

AIM element: (date_assignment.role)
(date_and_time_assignment.role)

Source: 41

Reference path: product
(dated_item = product
dated_item <-
applied_date_assignment.items[i]
applied_date_assignment <=
date_assignment
date_assignment.role)
(date_and_time_item = product
date_and_time_item <-
applied_date_and_time_assignment.items[i]
applied_date_and_time_assignment <=
date_and_time_assignment
date_and_time_assignment.role)

5.1.14.60.2 purchase_order_number

AIM element: action_directive.name

Source: 41

Reference path: product
purchase_item = product
purchase_item <-
purchase_assignment.items[i]
purchase_assignment <=
action_assignment
action_assignment.assigned_action ->

© ISO 2001 – All rights reserved

action =>
executed_action =>
directed_action
directed_action.directive ->
action_directive
action_directive.name

5.1.14.60.3 requisition_number

#1: Prior to purchase order being issue.

#2: A purchase order exists.

AIM element: versioned_action_request.id

Source: 41

Reference path: product
#1: (action_request_item = product
action_request_item <-
applied_action_request_assignment.items[i]
applied_action_request_assignment <=
action_request_assignment
action_request_assignment.assigned_action_request ->)
#2: (purchase_item = product
purchase_item <-
purchase_assignment.items[i]
purchase_assignment <=
action_assignment
action_assignment.assigned_action ->
action =>
executed_action =>
directed_action
directed_action.directive ->
action_directive
action_directive.requests[i] ->)
versioned_action_request
versioned_action_request.id

5.1.14.61 Supplier

AIM element: organization

Source: 41

5.1.14.61.1 supplier_id

AIM element: organization.id

Source: 41

© ISO 2001 – All rights reserved

5.1.14.61.2 vendor_name

AIM element: organization.name

Source: 41

5.1.14.61.3 supplier to catalogue_definition

AIM element: PATH

Reference path:
organization <-
organization_assignment.assigned_organization
{organization_assignment
organization_assignment.role ->
organization_role
organization_role.name = 'publisher'}
organization_assignment =>
plant_spatial_configuration_organization_assignment
plant_spatial_configuration_organization_assignment.items[i] ->
plant_spatial_configuration_organization_item
plant_spatial_configuration_organization_item = catalogue
catalogue

5.1.14.61.4 supplier to supplied_equipment

AIM element: PATH

Reference path:
organization <-
organization_assignment.assigned_organization
{organization_assignment
organization_assignment.role ->
organization_role
organization_role.name = 'supplier'}
organization_assignment =>
plant_spatial_configuration_organization_assignment
plant_spatial_configuration_organization_assignment.items[i] ->
plant_spatial_configuration_organization_item
plant_spatial_configuration_organization_item = product_definition_formation
{product_definition_formation =>
product_definition_formation_with_specified_source}
product_definition_formation
product_definition_formation.of_product ->
product
{product
classification_item = product
classification_item <-
applied_classification_assignment.items[i]
applied_classification_assignment <=
classification_assignment
classification_assignment.assigned_classification ->
group
group.name = 'equipment'}

© ISO 2001 – All rights reserved

5.1.14.62 Support_component

AIM element: product

Source: 41

Rules: dependent_instantiable_product_context
product_context_discipline_type_constraint
value_for_application_context

Reference path: {[product
classification_item = product
classification_item <-
applied_classification_assignment.items[i]
applied_classification_assignment <=
classification_assignment
classification_assignment.assigned_classification ->
group
group.name = 'support component']
[product
product.frame_of_reference[i] ->
product_context<=
application_context_element
application_context_element.name = 'plant item']}

5.1.14.63 Support_constraints

AIM element: support_constraint_representation

Source: 227

Reference path: support_constraint_representation <=
representation

5.1.14.63.1 gap

AIM element: [measure_with_unit.value_component]
[measure_with_unit.unit_component]

Source: 41

Reference path: support_constraint_representation <=
representation
representation.items[i] ->
{representation_item
(representation_item.name = 'negative x')
(representation_item.name = 'positive x')
(representation_item.name = 'negative y')
(representation_item.name = 'positive y')
(representation_item.name = 'negative z')
(representation_item.name = 'positive z')
(representation_item.name = 'negative x rotation')
(representation_item.name = 'positive x rotation')

© ISO 2001 – All rights reserved

(representation_item.name = 'negative y rotation')
(representation_item.name = 'positive y rotation')
(representation_item.name = 'negative z rotation')
(representation_item.name = 'positive z rotation')}
representation_item =>
measure_representation_item <=
{measure_with_unit =>
length_measure_with_unit}
measure_with_unit
[measure_with_unit.value_component]
[measure_with_unit.unit_component]

5.1.14.63.2 k

AIM element: [measure_with_unit.value_component]
[measure_with_unit.unit_component]

Source: 41

Reference path: support_constraint_representation <=
representation
representation.items[i] ->
representation_item =>
measure_representation_item <=
{measure_with_unit =>
ratio_measure_with_unit}
measure_with_unit
[measure_with_unit.value_component]
[measure_with_unit.unit_component]

5.1.14.63.3 restrained

AIM element: descriptive_representation_item.description

Source: 45

Reference path: support_constraint_representation <=
representation
representation.items[i] ->
representation_item =>
descriptive_representation_item
descriptive_representation_item.description

5.1.14.63.4 support_constraint_id

AIM element: representation.name

Source: 43

Reference path: support_constraint_representation <=
representation
representation.name

© ISO 2001 – All rights reserved

5.1.14.63.5 support_constraints to support_usage (negative x-direction)

AIM element: PATH

Reference path:
support_constraint_representation <=
{representation
representation.items[i] ->
representation_item
representation_item.name = 'negative x'}
representation <-
property_definition_representation.used_representation
property_definition_representation
property_definition_representation.definition ->
represented_definition
represented_definition = property_definition
property_definition
property_definition.definition ->
characterized_definition
characterized_definition = characterized_product_definition
characterized_product_definition
characterized_product_definition = product_definition_relationship
{product_definition_relationship
(product_definition_relationship.name = 'support usage')
(product_definition_relationship.name = 'support usage connection')}
product_definition_relationship

5.1.14.63.6 support_constraints to support_usage (positive x-direction)

AIM element: PATH

Reference path:
support_constraint_representation <=
{representation
representation.items[i] ->
representation_item
representation_item.name = 'positive x'}
representation <-
property_definition_representation.used_representation
property_definition_representation
property_definition_representation.definition ->
represented_definition
represented_definition = property_definition
property_definition
property_definition.definition ->
characterized_definition
characterized_definition = characterized_product_definition
characterized_product_definition
characterized_product_definition = product_definition_relationship
{product_definition_relationship
(product_definition_relationship.name = 'support usage')
(product_definition_relationship.name = 'support usage connection')}
product_definition_relationship

© ISO 2001 – All rights reserved

5.1.14.63.7 support_constraints to support_usage (negative y-direction)

AIM element: PATH

Reference path:
support_constraint_representation <=
{representation
representation.items[i] ->
representation_item
representation_item.name = 'negative y'}
representation <-
property_definition_representation.used_representation
property_definition_representation
property_definition_representation.definition ->
represented_definition
represented_definition = property_definition
property_definition
property_definition.definition ->
characterized_definition
characterized_definition = characterized_product_definition
characterized_product_definition
characterized_product_definition = product_definition_relationship
{product_definition_relationship
(product_definition_relationship.name = 'support usage')
(product_definition_relationship.name = 'support usage connection')}
product_definition_relationship

5.1.14.63.8 support_constraints to support_usage (positive y-direction)

AIM element: PATH

Reference path:
support_constraint_representation <=
{representation
representation.items[i] ->
representation_item
representation_item.name = 'positive y'}
representation <-
property_definition_representation.used_representation
property_definition_representation
property_definition_representation.definition ->
represented_definition
represented_definition = property_definition
property_definition
property_definition.definition ->
characterized_definition
characterized_definition = characterized_product_definition
characterized_product_definition
characterized_product_definition = product_definition_relationship
{product_definition_relationship
(product_definition_relationship.name = 'support usage')
(product_definition_relationship.name = 'support usage connection')}
product_definition_relationship

© ISO 2001 – All rights reserved

5.1.14.63.9 support_constraints to support_usage (negative z-direction)

AIM element: PATH

Reference path:
support_constraint_representation <=
{representation
representation.items[i] ->
representation_item
representation_item.name = 'negative z'}
representation <-
property_definition_representation.used_representation
property_definition_representation
property_definition_representation.definition ->
represented_definition
represented_definition = property_definition
property_definition
property_definition.definition ->
characterized_definition
characterized_definition = characterized_product_definition
characterized_product_definition
characterized_product_definition = product_definition_relationship
{product_definition_relationship
(product_definition_relationship.name = 'support usage')
(product_definition_relationship.name = 'support usage connection')}
product_definition_relationship

5.1.14.63.10 support_constraints to support_usage (positive z-direction)

AIM element: PATH

Reference path:
support_constraint_representation <=
{representation
representation.items[i] ->
representation_item
representation_item.name = 'positive z'}
representation <-
property_definition_representation.used_representation
property_definition_representation
property_definition_representation.definition ->
represented_definition
represented_definition = property_definition
property_definition
property_definition.definition ->
characterized_definition
characterized_definition = characterized_product_definition
characterized_product_definition
characterized_product_definition = product_definition_relationship
{product_definition_relationship
(product_definition_relationship.name = 'support usage')
(product_definition_relationship.name = 'support usage connection')}
product_definition_relationship

© ISO 2001 – All rights reserved

5.1.14.63.11 support_constraints to support_usage (negative rotation x-axis)

AIM element: PATH

Reference path:
support_constraint_representation <=
{representation
representation.items[i] ->
representation_item
representation_item.name = 'negative x rotation'}
representation <-
property_definition_representation.used_representation
property_definition_representation
property_definition_representation.definition ->
represented_definition
represented_definition = property_definition
property_definition
property_definition.definition ->
characterized_definition
characterized_definition = characterized_product_definition
characterized_product_definition
characterized_product_definition = product_definition_relationship
{product_definition_relationship
(product_definition_relationship.name = 'support usage')
(product_definition_relationship.name = 'support usage connection')}
product_definition_relationship

5.1.14.63.12 support_constraints to support_usage (positive rotation x-axis)

AIM element: PATH

Reference path:
support_constraint_representation <=
{representation
representation.items[i] ->
representation_item
representation_item.name = 'positive x rotation'}
representation <-
property_definition_representation.used_representation
property_definition_representation
property_definition_representation.definition ->
represented_definition
represented_definition = property_definition
property_definition
property_definition.definition ->
characterized_definition
characterized_definition = characterized_product_definition
characterized_product_definition
characterized_product_definition = product_definition_relationship
{product_definition_relationship
(product_definition_relationship.name = 'support usage')
(product_definition_relationship.name = 'support usage connection')}
product_definition_relationship

© ISO 2001 – All rights reserved

5.1.14.63.13 support_constraints to support_usage (negative rotation y-axis)

AIM element: PATH

Reference path:
support_constraint_representation <=
{representation
representation.items[i] ->
representation_item
representation_item.name = 'negative y rotation'}
representation <-
property_definition_representation.used_representation
property_definition_representation
property_definition_representation.definition ->
represented_definition
represented_definition = property_definition
property_definition
property_definition.definition ->
characterized_definition
characterized_definition = characterized_product_definition
characterized_product_definition
characterized_product_definition = product_definition_relationship
{product_definition_relationship
(product_definition_relationship.name = 'support usage')
(product_definition_relationship.name = 'support usage connection')}
product_definition_relationship

5.1.14.63.14 support_constraints to support_usage (positive rotation y-axis)

AIM element: PATH

Reference path:
support_constraint_representation <=
{representation
representation.items[i] ->
representation_item
representation_item.name = 'positive y rotation'}
representation <-
property_definition_representation.used_representation
property_definition_representation
property_definition_representation.definition ->
represented_definition
represented_definition = property_definition
property_definition
property_definition.definition ->
characterized_definition
characterized_definition = characterized_product_definition
characterized_product_definition
characterized_product_definition = product_definition_relationship
{product_definition_relationship
(product_definition_relationship.name = 'support usage')
(product_definition_relationship.name = 'support usage connection')}
product_definition_relationship

© ISO 2001 – All rights reserved

5.1.14.63.15 support_constraints to support_usage (negative rotation z-axis)

AIM element: PATH

Reference path: {representation
representation.items[i] ->
representation_item
representation_item.name = 'negative z rotation'}
representation <-
property_definition_representation.used_representation
property_definition_representation
property_definition_representation.definition ->
represented_definition
represented_definition = property_definition
property_definition
property_definition.definition ->
characterized_definition
characterized_definition = characterized_product_definition
characterized_product_definition
characterized_product_definition = product_definition_relationship
{product_definition_relationship
(product_definition_relationship.name = 'support usage')
(product_definition_relationship.name = 'support usage connection')}
product_definition_relationship

5.1.14.63.16 support_constraints to support_usage (positive rotation z-axis)

AIM element: PATH

Reference path: support_constraint_representation <=
{representation
representation.items[i] ->
representation_item
representation_item.name = 'positive z rotation'}
representation <-
property_definition_representation.used_representation
property_definition_representation
property_definition_representation.definition ->
represented_definition
represented_definition = property_definition
property_definition
property_definition.definition ->
characterized_definition
characterized_definition = characterized_product_definition
characterized_product_definition
characterized_product_definition = product_definition_relationship
{product_definition_relationship
(product_definition_relationship.name = 'support usage')
(product_definition_relationship.name = 'support usage connection')}
product_definition_relationship

© ISO 2001 – All rights reserved

5.1.14.64 Support_usage

AIM element: product_definition_relationship

Source: 41

Reference path: {product_definition_relationship
product_definition_relationship.name = 'support usage'}

5.1.14.64.1 detail_sheet_reference

AIM element: document

Source: 41

Reference path: product_definition_relationship
document_item = product_definition_relationship
document_item <-
applied_document_reference.items[i]
applied_document_reference <=
document_reference
document_reference.assigned_document ->
{document
document.kind ->
document_type
document_type.product_data_type = 'drawing'}
document

5.1.14.64.2 function

AIM element: product_definition_relationship.description

Source: 41

5.1.14.65 Support_usage_connection

AIM element: product_definition_relationship

Source: 41

Reference path: {product_definition_relationship
product_definition_relationship.name = 'support usage connection'}

5.1.14.65.1 support_usage_connection to plant_item_connection_-occurrence

AIM element: PATH

Rules: application_context_requires_ap_definition
dependent_instantiable_application_context
dependent_instantiable_product_definition_context

© ISO 2001 – All rights reserved

product_definition_context_name_constraint
product_definition_usage_constraint

Reference path: product_definition_relationship
[product_definition_relationship.relating_product_definition ->]
[product_definition_relationship.related_product_definition ->]
{product_definition
product_definition.frame_of_reference ->
product_definition_context <=
application_context_element
(application_context_element.name = 'functional occurrence')
(application_context_element.name = 'physical occurrence')}
product_definition
characterized_product_definition = product_definition
characterized_product_definition
characterized_definition = characterized_product_definition
characterized_definition <-
property_definition.definition
property_definition =>
product_definition_shape <-
shape_aspect.of_shape
shape_aspect =>
plant_item_connection

5.1.14.66 System_space

AIM element: system_space

Source: 227

Rules: dependent_instantiable_product_context
product_context_discipline_type_constraint
value_for_application_context

Reference path: system_space <=
product_definition_shape
{product_definition_shape <=
property_definition
property_definition.definition ->
characterized_definition
characterized_definition = characterized_product_definition
characterized_product_definition
characterized_product_definition = product_definition
[product_definition =>
(electrical_system)
(ducting_system)
(instrumentation_and_control_system)
(piping_system)
(structural_system)
(cableway_system)]
[product_definition
product_definition.formation ->
product_definition_formation
product_definition_formation.of_product ->

© ISO 2001 – All rights reserved

product
product.frame_of_reference[i] ->
product_context<=
application_context_element
application_context_element.name = 'plant system']}

5.1.14.67 Toothed_lock_washer

AIM element: bolt_and_nut_component_definition

Source: 227

Rules: dependent_instantiable_product_context
product_context_discipline_type_constraint
value_for_application_context

Reference path: bolt_and_nut_component_definition <=
product_definition
{bolt_and_nut_component_definition
classification_item = piping_support_definition
classification_item <-
applied_classification_assignment.items[i]
applied_classification_assignment <=
classification_assignment
classification_assignment.assigned_classification ->
[group =>
bolt_and_nut_component_class]
[group
group.name = 'toothed lock washer']
[group <-
group_relationship.related_group
group_relationship
{group_relationship.name = 'class hierarchy'}
group_relationship.relating_group ->
group
{[group.name = 'washer']
[group =>
bolt_and_nut_component_class]}}
{product_definition
product_definition.formation ->
product_definition_formation
product_definition_formation.of_product ->
[product
classification_item = product
classification_item <-
applied_classification_assignment.items[i]
applied_classification_assignment <=
classification_assignment
classification_assignment.assigned_classification ->
(group)
(group <-
group_relationship.related_group
group_relationship
group_relationship.relating_group ->

© ISO 2001 – All rights reserved

group)
group.name = 'bolt and nut component']
[product
product.frame_of_reference[i] ->
product_context <=
application_context_element
application_context_element.name = 'plant item']})

5.1.14.67.1 thickness

AIM element: [measure_with_unit.value_component]
[measure_with_unit.unit_component]

Source: 41

Rules: subtype_mandatory_shape_representation

Reference path: bolt_and_nut_component_definition <=
product_definition
characterized_product_definition = product_definition
characterized_product_definition
characterized_definition = characterized_product_definition
characterized_definition <-
property_definition.definition
property_definition =>
product_definition_shape <-
shape_aspect.of_shape
[shape_aspect <-
shape_aspect_relationship.relating_shape_aspect]
[shape_aspect <-
shape_aspect_relationship.related_shape_aspect]
shape_aspect_relationship =>
dimensional_location
dimensional_characteristic = dimensional_location
dimensional_characteristic <-
dimensional_characteristic_representation.dimension
dimensional_characteristic_representation
dimensional_characteristic_representation.representation ->
shape_dimension_representation <=
shape_representation <=
{representation
representation.name = 'toothed lock washer dimensional shape'}
representation
representation.items[i] ->
representation_item =>
{representation_item.name = 'thickness'}
measure_representation_item <=
{measure_with_unit =>
length_measure_with_unit}
measure_with_unit
[measure_with_unit.value_component]
[measure_with_unit.unit_component]

© ISO 2001 – All rights reserved

5.1.14.67.2 outside_diameter

AIM element: [measure_with_unit.value_component]
[measure_with_unit.unit_component]

Source: 41

Rules: subtype_mandatory_shape_representation

Reference path: bolt_and_nut_component_definition <=
product_definition
characterized_product_definition = product_definition
characterized_product_definition
characterized_definition = characterized_product_definition
characterized_definition <-
property_definition.definition
property_definition =>
product_definition_shape <-
shape_aspect.of_shape
[shape_aspect <-
shape_aspect_relationship.relating_shape_aspect]
[shape_aspect <-
shape_aspect_relationship.related_shape_aspect]
shape_aspect_relationship =>
dimensional_location
dimensional_characteristic = dimensional_location
dimensional_characteristic <-
dimensional_characteristic_representation.dimension
dimensional_characteristic_representation
dimensional_characteristic_representation.representation ->
shape_dimension_representation <=
shape_representation <=
{representation
representation.name = 'toothed lock washer dimensional shape'}
representation
representation.items[i] ->
representation_item =>
{representation_item.name = 'outside diameter'}
measure_representation_item <=
{measure_with_unit =>
length_measure_with_unit}
measure_with_unit
[measure_with_unit.value_component]
[measure_with_unit.unit_component]

5.1.14.68 Trunnion

AIM element: piping_support_definition

Source: 227

Rules: dependent_instantiable_product_context
product_context_discipline_type_constraint
value_for_application_context

© ISO 2001 – All rights reserved

Reference path: piping_support_definition <=
product_definition
{piping_support_definition
classification_item = piping_support_definition
classification_item <-
applied_classification_assignment.items[i]
applied_classification_assignment <=
classification_assignment
classification_assignment.assigned_classification ->
[group =>
piping_support_fitting_-class]
[group
group.name = 'trunnion']}
{product_definition
product_definition.formation ->
product_definition_formation
product_definition_formation.of_product ->
[product
classification_item = product
classification_item <-
applied_classification_assignment.items[i]
applied_classification_assignment <=
classification_assignment
classification_assignment.assigned_classification ->
(group)
(group <-
group_relationship.related_group
group_relationship
group_relationship.relating_group ->
group)
group.name = 'piping support']
[product
product.frame_of_reference[i] ->
product_context <=
application_context_element
application_context_element.name = 'plant item']})

5.1.14.68.1 length

AIM element: [measure_with_unit.value_component]
[measure_with_unit.unit_component]

Source: 41

Rules: subtype_mandatory_shape_representation

Reference path: piping_support_definition <=
product_definition
characterized_product_definition = product_definition
characterized_product_definition
characterized_definition = characterized_product_definition
characterized_definition <-
property_definition.definition

© ISO 2001 – All rights reserved

property_definition =>
product_definition_shape <-
shape_aspect.of_shape
[shape_aspect <-
shape_aspect_relationship.relating_shape_aspect]
[shape_aspect <-
shape_aspect_relationship.related_shape_aspect]
shape_aspect_relationship =>
dimensional_location
dimensional_characteristic = dimensional_location
dimensional_characteristic <-
dimensional_characteristic_representation.dimension
dimensional_characteristic_representation
dimensional_characteristic_representation.representation ->
shape_dimension_representation <=
shape_representation <=
{representation
representation.name = 'trunnion dimensional shape'}
representation
representation.items[i] ->
representation_item =>
{representation_item.name = 'length'}
measure_representation_item <=
{measure_with_unit =>
length_measure_with_unit}
measure_with_unit
[measure_with_unit.value_component]
[measure_with_unit.unit_component]

5.1.14.69 User_defined_attribute_value

AIM element: (measure_representation_item)

(descriptive_representation_item)

Source: 45

Reference path: {(measure_representation_item <=)
(descriptive_representation_item <=)
representation_item <-
representation.items[i]
representation
representation.name = 'user defined attributes'}

5.1.14.69.1 name

AIM element: representation_item.name

Source: 43

Reference path: (measure_representation_item <=)
(descriptive_representation_item <=)
representation_item

© ISO 2001 – All rights reserved

representation_item.name

5.1.14.69.2 value

AIM element: ([measure_with_unit.value_component]
[measure_with_unit.unit_component])

(descriptive_representation_item.description)

Source: 41

Reference path: (measure_representation_item <=
measure_with_unit
[measure_with_unit.value_component]
[measure_with_unit.unit_component])

(descriptive_representation_item
descriptive_representation_item.description)

45

5.1.14.69.3 user_defined_attribute_value to plant_item

AIM element: PATH

Reference path: (measure_representation_item <=)
(descriptive_representation_item <=)
representation_item <-
representation.items[i]
representation <-
property_definition_representation.used_representation
property_definition_representation
property_definition_representation.definition ->
represented_definition
represented_definition = property_definition
property_definition
property_definition.definition ->
characterized_definition
characterized_definition = characterized_product_definition
characterized_product_definition
characterized_product_definition = product_definition
(product_definition)
(product_definition =>
externally_defined_plant_item_definition)
(product_definition
product_definition.formation ->
product_definition_formation
product_definition_formation.of_product ->
product)

5.1.14.70 Washer

© ISO 2001 – All rights reserved

AIM element: bolt_and_nut_component_definition

Source: 227

Rules: dependent_instantiable_product_context
product_context_discipline_type_constraint
value_for_application_context

Reference path: bolt_and_nut_component_definition <=
product_definition
{bolt_and_nut_component_definition
classification_item = piping_support_definition
classification_item <-
applied_classification_assignment.items[i]
applied_classification_assignment <=
classification_assignment
classification_assignment.assigned_classification ->
[group =>
bolt_and_nut_component_class]
[group
group.name = 'washer']}
{product_definition
product_definition.formation ->
product_definition_formation
product_definition_formation.of_product ->
[product
classification_item = product
classification_item <-
applied_classification_assignment.items[i]
applied_classification_assignment <=
classification_assignment
classification_assignment.assigned_classification ->
(group)
(group <-
group_relationship.related_group
group_relationship
group_relationship.relating_group ->
group)
group.name = 'bolt and nut component']
[product
product.frame_of_reference[i] ->
product_context <=
application_context_element
application_context_element.name = 'plant item']})

5.1.14.70.1 washer_type

AIM element: group.name

Source: 41

Reference path: bolt_and_nut_component_definition
classification_item = piping_support_definition
classification_item <-

© ISO 2001 – All rights reserved

applied_classification_assignment.items[i]
applied_classification_assignment <=
classification_assignment
classification_assignment.assigned_classification ->
group <-
{[group =>
bolt_and_nut_component_class]
[group
group.name = 'washer']}
group_relationship.relating_group
group_relationship
{group_relationship.name = 'class hierarchy'}
group_relationship.related_group ->
group
{group =>
bolt_and_nut_component_class}
group.name

5.1.15 Shape UoF

5.1.15.1 Detail_shape

AIM element: representation.name

Source: 43

Reference path: {representation.name = 'detail'}

5.1.15.2 Envelope_shape

AIM element: representation.name

Source: 43

Reference path: {representation.name = 'envelope'}

5.1.15.3 Hybrid_shape_representation

AIM element: hybrid_shape_representation

Source: 227

Reference path: hybrid_shape_representation <=
shape_representation

5.1.15.4 Interfering_shape_element

AIM element: interfering_shape_element

Source: 227

© ISO 2001 – All rights reserved

Reference path: interfering_shape_element <=
[shape_aspect_relationship]
[shape_aspect]

5.1.15.4.1 interference_colour

AIM element: descriptive_colour

Source: 227

Reference path: interfering_shape_element <=
shape_aspect
shape_definition = shape_aspect
shape_definition
characterized_definition = shape_definition
characterized_definition <-
property_definition.definition
property_definition
represented_definition = property_definition
represented_definition <-
property_definition_representation.definition
property_definition_representation
property_definition_representation.used_representation ->
representation
representation.items[i] ->
{representation_item
representation_item.name = 'interference colour'}
representation_item =>
descriptive_representation_item =>
{descriptive_colour <=
colour}
descriptive_colour

5.1.15.5 Outline_shape

AIM element: representation.name

Source: 43

Reference path: {representation.name = 'outline'}

5.1.15.6 Plant_csg_shape_representation

AIM element: plant_csg_shape_representation

Source: 227

Reference path: plant_csg_shape_representation <=
shape_representation

5.1.15.7 Plant_item_centreline

© ISO 2001 – All rights reserved

AIM element: centre_of_symmetry

Source: 47

5.1.15.8 Plant_item_interference

AIM element: plant_item_interference

Source: 227

Reference path: plant_item_interference <=
product_definition_relationship

5.1.15.8.1 interference_id

AIM element: product_definition_relationship.name

Source: 41

Reference path: plant_item_interference <=
product_definition_relationship
product_definition_relationship.name

5.1.15.8.2 type

AIM element: product_definition_relationship.description

Source: 41

Reference path: plant_item_interference <=
product_definition_relationship
product_definition_relationship.description

5.1.15.8.3 plant_item_interference to interfering_shape_element

AIM element: PATH

Reference path: plant_item_interference <=
product_definition_relationship
product_definition_relationship.relating_product_definition ->
product_definition
characterized_product_definition = product_definition
characterized_product_definition
characterized_definition = characterized_product_definition
characterized_definition <-
property_definition.definition
property_definition =>
product_definition_shape <-
shape_aspect.of_shape
shape_aspect =>
interfering_shape_element

© ISO 2001 – All rights reserved

5.1.15.8.4 plant_item_interference to plant_item_interference_status

AIM element: PATH

Reference path: plant_item_interference <=
product_definition_relationship
(plant_spatial_configuration_organization_item = product_definition_relationship
plant_spatial_configuration_organization_item <-
plant_spatial_configuration_organization_assignment.items[i]
plant_spatial_configuration_organization_assignment)
(plant_spatial_configuration_person_item = product_definition_relationship
plant_spatial_configuration_person_item <-
plant_spatial_configuration_person_assignment.items[i]
plant_spatial_configuration_person_assignment)
(characterized_product_definition = product_definition_relationship
characterized_product_definition
characterized_definition = characterized_product_definition
characterized_definition <-
property_definition.definition
property_definition
represented_definition = property_definition
represented_definition <-
property_definition_representation.definition
property_definition_representation
property_definition_representation.used_representation ->
representation)

5.1.15.8.5 plant_item_interference to shape_interference_zone_usage

AIM element: PATH

Rules: subtype_mandatory_shape_representation

Reference path: plant_item_interference <=
product_definition_relationship
characterized_product_definition = product_definition_relationship
characterized_product_definition
characterized_definition = characterized_product_definition
characterized_definition <-
property_definition.definition
property_definition
represented_definition = property_definition
represented_definition <-
property_definition_representation.definition
property_definition_representation
property_definition_representation.used_representation ->
{representation =>
shape_representation}
representation
representation.items[i] ->
representation_item =>
mapped_item

© ISO 2001 – All rights reserved

5.1.15.9 Plant_item_interference_status

AIM element: representation

Source: 43

Reference path: {representation
representation.name = 'plant item interference status'}

5.1.15.9.1 assessor

AIM element: (organization.name)
([person.first_name]
[person.last_name])

Source: 41

Reference path: (representation
plant_spatial_configuration_organization_item = representation
plant_spatial_configuration_organization_item <-
plant_spatial_configuration_organization_assignment.items [i]
plant_spatial_configuration_organization_assignment <=
organization_assignment
organization_assignment.assigned_organization ->
organization
organization.name)
(representation
plant_spatial_configuration_person_item = representation
plant_spatial_configuration_person_item <-
plant_spatial_configuration_person_assignment.items [i]
plant_spatial_configuration_person_assignment <=
person_assignment
person_assignment.assigned_person ->
person
[person.first_name]
[person.last_name])

5.1.15.9.2 status

AIM element: descriptive_representation_item.description

Source: 45

Reference path: representation
representation.items[i] ->
{representation_item
representation_item.name = 'interference status'}
representation_item =>
descriptive_representation_item
descriptive_representation_item.description

© ISO 2001 – All rights reserved

5.1.15.10 Plant_item_shape

AIM element: product_definition_shape

Source: 41

Reference path: {product_definition_shape <=
property_definition
property_definition.definition ->
characterized_definition
characterized_definition = characterized_product_definition
characterized_product_definition
characterized_product_definition = product_definition
product_definition
product_definition.frame_of_reference ->
product_definition_context <=
application_context_element
(application_context_element.name = 'physical definition')
(application_context_element.name = 'physical occurrence')}

5.1.15.10.1 clash_detection_class

AIM element: property_definition.description

Source: 41

Reference path: product_definition_shape <=
property_definition
property_definition.description
{(property_definition.description = 'hard')
(property_definition.description = 'ignore')
(property_definition.description = 'soft')}

5.1.15.10.2 origin

AIM element: (axis2_placement_2d)
(axis2_placement_3d)

Source: 42

Reference path: product_definition_shape <=
property_definition
represented_definition = property_definition
represented_definition <-
property_definition_representation.definition
property_definition_representation
property_definition_representation.used_representation ->
representation
representation.items[i] ->
{representation_item
representation_item.name = 'plant item orientation'}
representation_item =>
geometric_representation_item =>

© ISO 2001 – All rights reserved

{placement
placement.location ->
cartesian_point <=
point <=
geometric_representation_item <=
representation_item
representation_item.name = 'plant item location'}
placement =>
(axis2_placement_2d)
(axis2_placement_3d)

5.1.15.10.3 shape_id

AIM element: property_definition.name

Source: 41

Reference path: product_definition_shape <=
property_definition
property_definition.name

5.1.15.10.4 plant_item_shape to changed_plant_item_shape

AIM element: IDENTICAL MAPPING

5.1.15.10.5 plant_item_shape to shape_representation

AIM element: PATH

Reference path: product_definition_shape <=
property_definition
represented_definition = property_definition
represented_definition <-
property_definition_representation.definition
property_definition_representation
{property_definition_representation =>
shape_definition_representation}
property_definition_representation.used_representation ->
representation =>
shape_representation =>
(plant_csg_shape_representation)
(hybrid_shape_representation)

5.1.15.11 Reference_geometry

AIM element: reference_geometry

Source: 227

Reference path: reference_geometry <=
derived_shape_aspect

© ISO 2001 – All rights reserved

5.1.15.11.1 name

AIM element: shape_aspect.name

Source: 41

Reference path: reference_geometry <=
derived_shape_aspect <=
shape_aspect
shape_aspect.name

5.1.15.11.2 reference_geometry_id

AIM element: representation_item.name

Source: 43

Reference path: reference_geometry <=
derived_shape_aspect <=
shape_aspect
shape_definition = shape_aspect
shape_definition
characterized_definition = shape_definition
characterized_definition <-
property_definition.definition
property_definition
represented_definition = property_definition
represented_definition <-
property_definition_representation.definition
property_definition_representation
property_definition_representation.used_representation ->
representation
representation.items[i] ->
representation_item
representation_item.name

5.1.15.11.3 reference_geometry to changed_reference_geometry

AIM element: IDENTICAL MAPPING

5.1.15.11.4 reference_geometry to shape_representation_element

AIM element: PATH

Reference path: reference_geometry <=
derived_shape_aspect <=
shape_aspect
shape_definition = shape_aspect
shape_definition
characterized_definition = shape_definition
characterized_definition <-
property_definition.definition
property_definition

© ISO 2001 – All rights reserved

represented_definition = property_definition
represented_definition <-
property_definition_representation.definition
property_definition_representation
property_definition_representation.used_representation ->
representation
representation.items[i] ->
representation_item

5.1.15.12 Shape_interference_zone_usage

AIM element: mapped_item

Source: 43

5.1.15.13 Shape_parameter

AIM element: measure_representation_item

Source: 45

Reference path: {measure_representation_item <=
representation_item <-
representation.items[i]
representation =>
shape_representation =>
hybrid_shape_representation}

5.1.15.13.1 name

AIM element: representation_item.name

Source: 43

Reference path: measure_representation_item <=
representation_item
representation_item.name

5.1.15.13.2 value

AIM element: [measure_with_unit.value_component]
[measure_with_unit.unit_component]

Source: 41

Reference path: measure_representation_item <=
measure_with_unit
[measure_with_unit.value_component]
[measure_with_unit.unit_component]

© ISO 2001 – All rights reserved

5.1.15.14 Shape_representation

AIM element: (hybrid_shape_representation)
(plant_csg_shape_representation)

Source: 227

Reference path: (hybrid_shape_representation <=)
(plant_csg_shape_representation <=)
shape_representation
{shape_representation <=
representation
(representation.name = 'detail')
(representation.name = 'envelope')
(representation.name = 'outline')}

5.1.15.14.1 shape_representation to shape_representation_element_usage

AIM element: PATH

Rules: subtype_mandatory_shape_representation

Reference path: property_definition_representation
property_definition_representation.used_representation ->
{representation =>
shape_representation =>
(plant_csg_shape_representation)
(hybrid_shape_representation)}
representation
representation.items[i] ->
representation_item

5.1.15.15 Shape_representation_element

AIM element: representation_item

Source: 43

5.1.15.15.1 element_id

AIM element: representation_item.name

Source: 43

5.1.15.15.2 shape_representation_element to shape_interference_zone_-usage

AIM element: PATH

Reference path: representation_item <-
representation_map.mapping_origin
representation_map <-

© ISO 2001 – All rights reserved

mapped_item.mapping_source
mapped_item

5.1.15.15.3 shape_representation_element to shape_representation_-element_usage

AIM element: IDENTICAL MAPPING

Rules: subtype_mandatory_shape_representation

5.1.15.16 Shape_representation_element_usage

AIM element: representation_item

Source: 43

5.1.15.16.1 element_colour

AIM element: descriptive_colour

Source: 227

Rules: subtype_mandatory_shape_representation

Reference path: representation_item <-
representation_item_relationship.related_representation_item
{representation_item_relationship
representation_item_relationship.name = 'element color association'}
representation_item_relationship
representation_item_relationship.relating_representation_item ->
{representation_item
representation_item.name = 'element colour'}
representation_item =>
descriptive_representation_item =>
{descriptive_colour <=
colour}
descriptive_colour

5.1.15.16.2 layer

AIM element: presentation_layer_assignment

Source: 46

Rules: subtype_mandatory_shape_representation

Reference path: representation_item
layered_item = representation_item
layered_item <-
presentation_layer_assignment.assigned_items[i]
presentation_layer_assignment

© ISO 2001 – All rights reserved

5.1.15.16.3 shape_representation_element_usage to interfering_shape_-element

AIM element: PATH

Rules: subtype_mandatory_shape_representation

Reference path: representation_item <-
item_identified_representation_usage.identified_item
item_identified_representation_usage
item_identified_representation_usage.definition ->
represented_definition
represented_definition = shape_aspect
shape_aspect =>
interfering_shape_element

5.1.16 Site_characterization UoF

5.1.16.1 Breakline

AIM element: polyline

Source: 42

5.1.16.1.1 breakline to survey_point

AIM element: PATH

Reference path: polyline
polyline.points[i] ->
cartesian_point
{cartesian_point <=
point <=
geometric_representation_item <=
representation_item
representation_item.name = 'survey point'}

5.1.16.2 Building

AIM element: site_building

Source: 227

Reference path: site_building <=
property_definition

5.1.16.2.1 building_id

AIM element: representation

© ISO 2001 – All rights reserved

Source: 43

Reference path: site_building <=
property_definition
represented_definition = property_definition
represented_definition <-
property_definition_representation.definition
property_definition_representation
property_definition_representation.used_representation ->
representation
{representation
[representation.name = 'building number']
[representation.items[i] ->
representation_item =>
descriptive_representation_item]}

5.1.16.2.2 location_and_orientation

AIM element: [(axis2_placement_2d)
(axis2_placement_3d)]
[cartesian_point]

Source: 42

Reference path: site_building <=
property_definition
represented_definition = property_definition
represented_definition <-
property_definition_representation.definition
property_definition_representation
property_definition_representation.used_representation ->
representation
representation.items[i] ->
{representation_item
representation_item.name = 'building orientation'}
representation_item =>
geometric_representation_item =>
[placement =>
(axis2_placement_2d)
(axis2_placement_3d)]
[placement
placement.location ->
cartesian_point
{cartesian_point <=
point <=
geometric_representation_item <=
representation_item
representation_item.name = 'building location'}]

5.1.16.2.3 name

AIM element: property_definition.name

© ISO 2001 – All rights reserved

Source: 41

Reference path: site_building <=
property_definition
property_definition.name

5.1.16.2.4 shape

AIM element: shape_representation

Source: 41

Rules: subtype_mandatory_shape_representation

Reference path: site_building <=
{property_definition =>
product_definition_shape}
property_definition
represented_definition = property_definition
represented_definition <-
property_definition_representation.definition
{property_definition_representation =>
shape_definition_representation}
property_definition_representation
property_definition_representation.used_representation ->
representation =>
shape_representation

5.1.16.2.5 building to location_in_building

AIM element: PATH

Reference path: site_building <=
property_definition
represented_definition = property_definition
represented_definition <-
property_definition_representation.definition
property_definition_representation
property_definition_representation.used_representation ->
representation
representation.items[i] ->
representation_item =>
geometric_representation_item =>
placement =>
(axis2_placement_2d)
(axis2_placement_3d)

5.1.16.2.6 building to reference_geometry

AIM element: PATH

Reference path: site_building <=
property_definition =>

© ISO 2001 – All rights reserved

product_definition_shape <-
shape_aspect.of_shape
shape_aspect =>
derived_shape_aspect =>
reference_geometry

5.1.16.3 Facet_trigon

AIM element: poly_loop

Source: 42

5.1.16.3.1 facet_trigon to survey_point

AIM element: PATH

Reference path: poly_loop
poly_loop.polygon[i] ->
cartesian_point
{cartesian_point <=
point <=
geometric_representation_item <=
representation_item
representation_item.name = 'survey point'}

5.1.16.4 Faceted_surface_representation

AIM element: site_representation

Source: 227

Rules: subtype_mandatory_shape_representation

Reference path: site_representation <=
shape_representation
{shape_representation <=
representation
representation.items[i] ->
representation_item =>
topological_representation_item =>
connected_face_set}

5.1.16.4.1 faceted_surface_representation to facet_trigon

AIM element: PATH

Rules: subtype_mandatory_shape_representation

Reference path: site_representation <=
shape_representation <=
representation
representation.items[i] ->

© ISO 2001 – All rights reserved

representation_item =>
topological_representation_item =>
connected_face_set
connected_face_set.cfs_faces[i] ->
{face =>
face_surface}
face
face.bounds[i] ->
face_bound
face_bound.bound ->
loop =>
poly_loop

5.1.16.5 Gis_position

AIM element: representation

Source: 43

Reference path: {representation
representation.name = 'gis position'}

5.1.16.5.1 height

AIM element: [measure_with_unit.value_component]
[measure_with_unit.unit_component]

Source: 41

Reference path: representation
representation.items[i] ->
{representation_item
representation_item.name = 'height'}
representation_item =>
measure_representation_item <=
measure_with_unit
[measure_with_unit.value_component]
[measure_with_unit.unit_component]

5.1.16.5.2 scale

AIM element: [measure_with_unit.value_component]
[measure_with_unit.unit_component]

Source: 41

Reference path: representation
representation.items[i] ->
{representation_item
representation_item.name = 'scale'}
representation_item =>
measure_representation_item <=
measure_with_unit

© ISO 2001 – All rights reserved

[measure_with_unit.value_component]
[measure_with_unit.unit_component]

5.1.16.5.3 system

AIM element: representation_context.context_type

Source: 43

Reference path: representation
representation.context_of_items ->
representation_context
representation_context.context_type

5.1.16.5.4 x_axis_delta_x

AIM element: [measure_with_unit.value_component]
[measure_with_unit.unit_component]

Source: 41

Reference path: representation
representation.items[i] ->
{representation_item
representation_item.name = 'x-axis delta x'}
representation_item =>
measure_representation_item <=
measure_with_unit
[measure_with_unit.value_component]
[measure_with_unit.unit_component]

5.1.16.5.5 x_axis_delta_y

AIM element: [measure_with_unit.value_component]
[measure_with_unit.unit_component]

Source: 41

Reference path: representation
representation.items[i] ->
{representation_item
representation_item.name = 'x-axis delta y'}
representation_item =>
measure_representation_item <=
measure_with_unit
[measure_with_unit.value_component]
[measure_with_unit.unit_component]

5.1.16.5.6 x_coordinate

AIM element: [measure_with_unit.value_component]

© ISO 2001 – All rights reserved

[measure_with_unit.unit_component]

Source: 41

Reference path: representation
representation.items[i] ->
{representation_item
representation_item.name = 'x coordinate'}
representation_item =>
measure_representation_item <=
measure_with_unit
[measure_with_unit.value_component]
[measure_with_unit.unit_component]

5.1.16.5.7 y_coordinate

AIM element: [measure_with_unit.value_component]
[measure_with_unit.unit_component]

Source: 41

Reference path: representation
representation.items[i] ->
{representation_item
representation_item.name = 'y coordinate'}
representation_item =>
measure_representation_item <=
measure_with_unit
[measure_with_unit.value_component]
[measure_with_unit.unit_component]

5.1.16.5.8 zone

AIM element: descriptive_representation_item.description

Source: 45

Reference path: representation
representation.items[i] ->
{representation_item
representation_item.name = 'zone'}
representation_item =>
descriptive_representation_item
descriptive_representation_item.description

5.1.16.6 Location_in_building

AIM element: (axis2_placement_2d)
(axis2_placement_3d)

Source: 42

© ISO 2001 – All rights reserved

Reference path: {(axis2_placement_2d <=)
(axis2_placement_3d <=)
placement <=
geometric_representation_item <=
representation_item <-
representation.items[i]
representation <-
property_definition_representation.used_representation
property_definition_representation
property_definition_representation.definition ->
represented_definition
represented_definition = property_definition
property_definition =>
site_building}

5.1.16.7 Location_in_site

AIM element: (axis2_placement_2d)
(axis2_placement_3d)

Source: 42

Reference path: {(axis2_placement_2d <=)
(axis2_placement_3d <=)
placement <=
geometric_representation_item <=
representation_item <-
representation.items[i]
representation <-
property_definition_representation.used_representation
{property_definition_representation =>
shape_definition_representation}
property_definition_representation
property_definition_representation.definition ->
represented_definition
represented_definition = property_definition
{property_definition =>
product_definition_shape}
property_definition
property_definition.definition ->
characterized_definition
characterized_definition = characterized_object
characterized_object =>
site}

5.1.16.8 Point_and_line_representation

AIM element: site_representation

Source: 227

Reference path: site_representation <=
shape_representation

© ISO 2001 – All rights reserved

{shape_representation <=
representation
representation.items[i] ->
representation_item =>
geometric_representation_item =>
geometric_set =>
geometric_curve_set}

5.1.16.8.1 point_and_line_representation to survey_point

AIM element: PATH

Rules: subtype_mandatory_shape_representation

Reference path: site_representation <=
shape_representation <=
representation
representation.items[i] ->
representation_item =>
geometric_representation_item =>
{geometric_set =>
geometric_curve_set}
geometric_set
geometric_set.elements[i] ->
geometric_set_select
geometric_set_select = point
point =>
cartesian_point
{cartesian_point <=
point <=
geometric_representation_item <=
representation_item
representation_item.name = 'survey point'}

5.1.16.9 Site

AIM element: site

Source: 227

Reference path: site <=
[characterized_object]
[property_definition]

5.1.16.9.1 address

AIM element: representation

Source: 43

Rules: subtype_exclusive_characterized_object

© ISO 2001 – All rights reserved

Reference path: site <=
characterized_object
characterized_definition = characterized_object
characterized_definition <-
property_definition.definition
property_definition
represented_definition = property_definition
represented_definition <-
property_definition_representation.definition
property_definition_representation
property_definition_representation.used_representation ->
representation
{representation
representation.name = 'site address'}

5.1.16.9.2 coordinates

AIM element: representation

Source: 43

Rules: subtype_exclusive_characterized_object

Reference path: site <=
characterized_object
characterized_definition = characterized_object
characterized_definition <-
property_definition.definition
property_definition
represented_definition = property_definition
represented_definition <-
property_definition_representation.definition
property_definition_representation
property_definition_representation.used_representation ->
representation
{representation
representation.name = 'site coordinates'}

5.1.16.9.3 elevation

AIM element: representation

Source: 43

Rules: subtype_exclusive_characterized_object

Reference path: site <=
characterized_object
characterized_definition = characterized_object
characterized_definition <-
property_definition.definition
property_definition
represented_definition = property_definition

© ISO 2001 – All rights reserved

represented_definition <-
property_definition_representation.definition
property_definition_representation
property_definition_representation.used_representation ->
representation
{representation
representation.name = 'site elevation'}

5.1.16.9.4 environmental_references

AIM element: document.id

Source: 41

Reference path: site
document_item = site
document_item <-
applied_document_reference.items[i]
applied_document_reference <=
document_reference
document_reference.assigned_document ->
document
document.id

5.1.16.9.5 locality

AIM element: representation

Source: 43

Rules: subtype_exclusive_characterized_object

Reference path: site <=
characterized_object
characterized_definition = characterized_object
characterized_definition <-
property_definition.definition
property_definition
represented_definition = property_definition
represented_definition <-
property_definition_representation.definition
property_definition_representation
property_definition_representation.used_representation ->
representation
{representation
representation.name = 'site locality'}

5.1.16.9.6 name

AIM element: characterized_object.description

Source: 41

© ISO 2001 – All rights reserved

Rules: subtype_exclusive_characterized_object

Reference path: site <=
characterized_object
characterized_object.description

5.1.16.9.7 orientation

AIM element: (axis2_placement_2d)
(axis2_placement_3d)

Source: 42

Rules: subtype_exclusive_characterized_object

Reference path: site <=
characterized_object
characterized_definition = characterized_object
characterized_definition <-
property_definition.definition
property_definition
represented_definition = property_definition
represented_definition <-
property_definition_representation.definition
property_definition_representation
property_definition_representation.used_representation ->
representation
representation.items[i] ->
{representation_item
representation_item.name = 'site orientation'}
representation_item =>
geometric_representation_item =>
{placement
placement.location ->
cartesian_point <=
point <=
geometric_representation_item <=
representation_item
representation_item.name = 'site location'}
placement =>
(axis2_placement_2d)
(axis2_placement_3d)

5.1.16.9.8 owners

AIM element: (person)
(organization)
(person_and_organization)

Source: 41

Reference path: site
(plant_spatial_configuration_person_item = site

© ISO 2001 – All rights reserved

plant_spatial_configuration_person_item <-
plant_spatial_configuration_person_assignment.items[i]
plant_spatial_configuration_person_assignment <=
{person_assignment
person_assignment.role ->
person_role
person_role.name = 'owner'}
person_assignment
person_assignment.assigned_person ->
person)
(plant_spatial_configuration_organization_item = site
plant_spatial_configuration_organization_item <-
plant_spatial_configuration_organization_assignment.items[i]
plant_spatial_configuration_organization_assignment <=
{organization_assignment
organization_assignment.role ->
organization_role
organization_role.name = 'owner'}
organization_assignment
organization_assignment.assigned_organization ->
organization)
(plant_spatial_configuration_person_and_organization_item = site
plant_spatial_configuration_person_and_organization_item <-
plant_spatial_configuration_person_and_organization_assignment.items[i]
plant_spatial_configuration_person_and_organization_assignment <=
{person_and_organization_assignment
person_and_organization_assignment.role ->
person_and_organization_role
person_and_organization_role.name = 'owner'}
person_and_organization_assignment
person_and_organization_assignment.assigned_person_and_organization ->
person_and_organization)

5.1.16.9.9 site_id

AIM element: characterized_object.name

Source: 41

Rules: subtype_exclusive_characterized_object

Reference path: site <=
characterized_object
characterized_object.name

5.1.16.9.10 site to building

AIM element: PATH

Rules: subtype_exclusive_characterized_object

Reference path: site <=
characterized_object

© ISO 2001 – All rights reserved

characterized_definition = characterized_object
characterized_definition <-
property_definition.definition
property_definition =>
site_building

5.1.16.9.11 site to changed_site

AIM element: IDENTICAL MAPPING

5.1.16.9.12 site to location_in_site

AIM element: PATH

Rules: subtype_exclusive_characterized_object

Reference path: site <=
characterized_object
characterized_definition = characterized_object
characterized_definition <-
property_definition.definition
property_definition
represented_definition = property_definition
represented_definition <-
property_definition_representation.definition
property_definition_representation
property_definition_representation.used_representation ->
representation
representation.items[i] ->
representation_item =>
geometric_representation_item =>
placement =>
(axis2_placement_2d)
(axis2_placement_3d)

5.1.16.9.13 site to site_feature

AIM element: PATH

Rules: subtype_exclusive_characterized_object

Reference path: site <=
characterized_object
characterized_definition = characterized_object
characterized_definition <-
property_definition.definition
property_definition =>
site_feature

5.1.16.9.14 site to site_shape_representation

© ISO 2001 – All rights reserved

AIM element: PATH

Rules: subtype_exclusive_characterized_object
subtype_mandatory_shape_representation

Reference path: site <=
characterized_object
characterized_definition = characterized_object
characterized_definition <-
property_definition.definition
{property_definition =>
product_definition_shape}
property_definition
property_definition.used_representation ->
representation =>
shape_representation =>
site_representation

5.1.16.9.15 site to sited_plant

AIM element: PATH

Reference path: site <=
property_definition <-
property_definition_relationship.relating_property_definition
{property_definition_relationship
property_definition_relationship.name = 'plant on site'}
property_definition_relationship
property_definition_relationship.related_property_definition ->
property_definition =>
sited_plant

5.1.16.10 Site_feature

AIM element: site_feature

Source: 227

Reference path: site_feature <=
property_definition

5.1.16.10.1 location_and_orientation

AIM element: [(axis2_placement_2d)
(axis2_placement_3d)]
[cartesian_point]

Source: 42

Reference path: site_feature <=
property_definition
represented_definition = property_definition
represented_definition <-

© ISO 2001 – All rights reserved

property_definition_representation.definition
property_definition_representation
property_definition_representation.used_representation ->
representation
representation.items[i] ->
{representation_item
representation_item.name = 'feature orientation'}
representation_item =>
geometric_representation_item =>
[placement =>
(axis2_placement_2d)
(axis2_placement_3d)]
[placement
placement.location ->
cartesian_point
{cartesian_point <=
point <=
geometric_representation_item <=
representation_item
representation_item.name = 'feature location'}]

5.1.16.10.2 man_made_or_natural

AIM element: descriptive_representation_item.description

Source: 45

Reference path: site_feature <=
property_definition
represented_definition = property_definition
represented_definition <-
property_definition_representation.definition
property_definition_representation
property_definition_representation.used_representation ->
representation
representation.items[i] ->
{representation_item
representation_item.name = 'origin type'}
representation_item =>
descriptive_representation_item
descriptive_representation_item.description
{(descriptive_representation_item.description = 'man made')
(descriptive_representation_item.description = 'natural')}

5.1.16.10.3 shape

AIM element: shape_representation

Source: 41

Rules: subtype_mandatory_shape_representation

Reference path: site_feature <=

© ISO 2001 – All rights reserved

{property_definition =>
product_definition_shape}
property_definition
represented_definition = property_definition
represented_definition <-
property_definition_representation.definition
{property_definition_representation =>
shape_definition_representation}
property_definition_representation
property_definition_representation.used_representation ->
representation =>
shape_representation

5.1.16.10.4 site_feature_id

AIM element: property_definition.name

Source: 41

Reference path: site_feature <=
property_definition
property_definition.name

5.1.16.10.5 type

AIM element: descriptive_representation_item.description

Source: 45

Reference path: site_feature <=
property_definition
represented_definition = property_definition
represented_definition <-
property_definition_representation.definition
property_definition_representation
property_definition_representation.used_representation ->
representation
representation.items[i] ->
{representation_item
representation_item.name = 'site feature type'}
representation_item =>
descriptive_representation_item
descriptive_representation_item.description

5.1.16.10.6 site_feature to changed_site_feature

AIM element: IDENTICAL MAPPING

5.1.16.11 Site_shape_representation

AIM element: site_representation

© ISO 2001 – All rights reserved

Source: 227

Reference path: site_representation <=
shape_representation

5.1.16.11.1 site_shape_representation_id

AIM element: representation.name

Source: 43

Rules: subtype_mandatory_shape_representation

Reference path: site_representation <=
shape_representation <=
representation
representation.name

5.1.16.11.2 site_shape_representation to breakline

AIM element: PATH

Rules: subtype_mandatory_shape_representation

Reference path: site_representation <=
shape_representation <=
representation
representation.items[i] ->
representation_item =>
geometric_representation_item =>
{geometric_set =>
geometric_curve_set}
geometric_set
geometric_set.elements[i] ->
geometric_set_select
geometric_set_select = curve
curve =>
bounded_curve =>
polyline

5.1.16.11.3 site_shape_representation to gis_position

AIM element: PATH

Rules: subtype_mandatory_shape_representation

Reference path: site_representation <=
shape_representation <=
representation <-
representation_map.mapped_representation
representation_map <-
mapped_item.mapping_source
mapped_item <=

© ISO 2001 – All rights reserved

representation_item <-
representation.items[i]
representation
{representation
representation.name = 'gis position'}

5.1.16.12 Sited_plant

AIM element: sited_plant

Source: 227

Reference path: sited_plant <=
property_definition
{property_definition
property_definition.definition ->
characterized_definition
characterized_definition = characterized_product_definition
characterized_product_definition
characterized_product_definition = product_definition
product_definition
[product_definition.formation ->
product_definition_formation
product_definition_formation.of_product ->
product =>
plant]
[product_definition.frame_of_reference ->
[product_definition_context <=
application_context_element
application_context_element.name = 'physical occurrence']
[product_definition_context
product_definition_context.life_cycle_stage = 'physical design']]}

5.1.16.12.1 plant_site_location

AIM element: cartesian_point

Source: 42

Rules: subtype_exclusive_characterized_object

Reference path: sited_plant <=
property_definition
property_definition.definition
property_definition
represented_definition = property_definition
represented_definition <-
property_definition_representation.definition
property_definition_representation
property_definition_representation.used_representation ->
representation <-
representation_map.mapped_representation
representation_map <-

© ISO 2001 – All rights reserved

mapped_item.mapping_source
{mapped_item <=
representation_item <-
representation.items[i]
representation <-
property_definition_representation.used_representation
property_definition_representation
property_definition_representation.definition ->
represented_definition
represented_definition = property_definition
property_definition
property_definition.definition ->
characterized_definition
characterized_definition = characterized_object
characterized_object =>
site}
mapped_item
mapped_item.mapping_target ->
{representation_item
representation_item.name = 'plant orientation'}
representation_item =>
geometric_representation_item =>
{placement =>
(axis2_placement_2d)
(axis2_placement_3d)}
placement
placement.location ->
cartesian_point
{cartesian_point <=
point <=
geometric_representation_item <=
representation_item
representation_item.name = 'plant location'}

5.1.16.12.2 plant_site_orientation

AIM element: (axis2_placement_2d)
(axis2_placement_3d)

Source: 42

Rules: subtype_exclusive_characterized_object

Reference path: sited_plant <=
property_definition
represented_definition = property_definition
represented_definition <-
property_definition_representation.definition
property_definition_representation
property_definition_representation.used_representation ->
representation <-
representation_map.mapped_representation
representation_map <-
mapped_item.mapping_source

© ISO 2001 – All rights reserved

{mapped_item <=
representation_item <-
representation.items[i]
representation <-
property_definition_representation.used_representation
property_definition_representation
property_definition_representation.definition ->
represented_definition
represented_definition = property_definition
property_definition
property_definition.definition ->
characterized_definition
characterized_definition = characterized_object
characterized_object =>
site}
mapped_item
mapped_item.mapping_target ->
{representation_item
representation_item.name = 'plant orientation'}
representation_item =>
geometric_representation_item =>
placement =>
(axis2_placement_2d)
(axis2_placement_3d)

5.1.16.12.3 sited_plant to changed_sited_plant

AIM element: IDENTICAL MAPPING

5.1.16.13 Survey_point

AIM element: cartesian_point

Source: 42

Reference path: {cartesian_point <=
point <=
geometric_representation_item <=
representation_item
representation_item.name = 'survey point'}

5.1.17 Global rules referenced in the mapping specification

1. application_context_requires_ap_definition
2. approval_requires_approval_date_time
3. approval_requires_approval_person_organization
4. change_action_requires_date
5. change_item_requires_creation_date
6. change_item_requires_id
7. change_life_cycle_stage_usage_requires_approval
8. change_life_cycle_stage_usage_requires_stage
9. dependent_instantiable_application_context

© ISO 2001 – All rights reserved

10. dependent_instantiable_product_context
11. dependent_instantiable_product_definition_context
12. product_context_discipline_type_constraint
13. product_definition_context_name_constraint
14. product_definition_usage_constraint
15. subtype_exclusive_characterized_object
16. subtype_mandatory_externally_defined_item
17. subtype_mandatory_pre_defined_item
18. subtype_mandatory_shape_representation
19. value_for_application_context
20. version2_p41_object_role_selection
21. version2_p41_uninstantiable_basic_attributes

© ISO 2001 – All rights reserved

5.2 AIM EXPRESS short listing

This clause specifies the EXPRESS schema that uses elements from the integrated resources and contains the types, entity specializations, rules, and functions that are specific to this part of ISO 10303. This clause also specifies modifications to the text for constructs that are imported from the integrated resources. The definitions and EXPRESS provided in the integrated resources for constructs used in the AIM may include select list items and subtypes that are not imported into the AIM. Requirements stated in the integrated resources that refer to such items and subtypes apply exclusively to those items which are imported into the AIM.

EXPRESS specification:

```
*)
SCHEMA plant_spatial_configuration;

USE FROM action_schema
  (action_directive,
   action_method_relationship,
   action_relationship,
   action_request_solution,
   action_request_status,
   action_status,
   directed_action,
   versioned_action_request); -- ISO 10303-41

USE FROM application_context_schema
  (application_context,
   application_protocol_definition,
   product_context,
   product_definition_context); -- ISO 10303-41

USE FROM approval_schema
  (approval,
   approval_date_time,
   approval_person_organization); -- ISO 10303-41

USE FROM basic_attribute_schema
  (description_attribute,
   id_attribute,
   name_attribute,
   role_association); -- ISO 10303-41

USE FROM date_time_schema
  (calendar_date,
   date_and_time); -- ISO 10303-41

USE FROM document_schema
  (document,
   document_relationship,
   document_usage_constraint); -- ISO 10303-41

USE FROM external_reference_schema
  (external_source,
   externally_defined_item,
   externally_defined_item_relationship,
   pre_defined_item); -- ISO 10303-41

USE FROM geometric_model_schema
  (block,
   boolean_operator,
   boolean_operand,
   boolean_result,
   brep_with_voids,
   csg_solid,
   cyclide_segment_solid,
   eccentric_cone,
   ellipsoid,
```


© ISO 2001 – All rights reserved

```
   extruded_area_solid,
   extruded_face_solid,
   faceted_brep,
   geometric_curve_set,
   geometric_set,
   geometric_set_replica,
   manifold_solid_brep,
   rectangular_pyramid,
   revolved_area_solid,
   revolved_face_solid,
   right_angular_wedge,
   right_circular_cone,
   right_circular_cylinder,
   shell_based_wireframe_model,
   solid_model,
   sphere,
   swept_face_solid,
   swept_area_solid,
   torus); -- ISO 10303-42

USE FROM geometry_schema
  (axis2_placement_2d,
   axis2_placement_3d,
   b_spline_curve,
   b_spline_curve_with_knots,
   b_spline_surface,
   b_spline_surface_with_knots,
   bezier_curve,
   bezier_surface,
   boundary_curve,
   bounded_pcurve,
   bounded_surface_curve,
   cartesian_point,
   circle,
   composite_curve,
   composite_curve_on_surface,
   composite_curve_segment,
   conical_surface,
   curve_bounded_surface,
   curve_replica,
   cylindrical_surface,
   degenerate_pcurve,
   degenerate_toroidal_surface,
   direction,
   ellipse,
   evaluated_degenerate_pcurve,
   geometric_representation_context,
   geometric_representation_item,
   hyperbola,
   intersection_curve,
   line,
   offset_curve_2d,
   offset_curve_3d,
   offset_surface,
   outer_boundary_curve,
   parabola,
   pcurve,
   plane,
   point,
   point_on_curve,
   point_on_surface,
   point_replica,
   polyline,
   quasi_uniform_curve,
   quasi_uniform_surface,
   rational_b_spline_curve,
   rational_b_spline_surface,
   reparametrised_composite_curve_segment,
   rectangular_composite_surface,
   rectangular_trimmed_surface,
```


© ISO 2001 – All rights reserved

```
   seam_curve,
   spherical_surface,
   surface_curve,
   surface_of_linear_extrusion,
   surface_of_revolution,
   surface_patch,
   surface_replica,
   toroidal_surface,
   trimmed_curve,
   uniform_curve,
   uniform_surface); -- ISO 10303-42

USE FROM group_schema
  (group,
   group_relationship); -- ISO 10303-41

USE FROM management_resources_schema
  (action_assignment,
   action_request_assignment,
   approval_assignment,
   classification_assignment,
   date_and_time_assignment,
   date_assignment,
   document_reference,
   group_assignment,
   identification_assignment,
   name_assignment,
   organization_assignment,
   person_and_organization_assignment,
   person_assignment); -- ISO 10303-41

USE FROM material_property_definition_schema
  (characterized_material_property,
   material_designation,
   material_designation_characterization,
   material_property,
   product_material_composition_relationship,
   property_definition_relationship); -- ISO 10303-45

USE FROM material_property_representation_schema
  (material_property_representation); -- ISO 10303-45

USE FROM measure_schema
  (amount_of_substance_measure,
   amount_of_substance_measure_with_unit,
   amount_of_substance_unit,
   area_measure,
   context_dependent_measure,
   context_dependent_unit,
   conversion_based_unit,
   count_measure,
   derived_unit,
   electric_current_measure,
   electric_current_measure_with_unit,
   electric_current_unit,
   global_unit_assigned_context,
   length_measure,
   length_measure_with_unit,
   length_unit,
   luminous_intensity_measure,
   luminous_intensity_measure_with_unit,
   luminous_intensity_unit,
   mass_measure,
   mass_measure_with_unit,
   mass_unit,
   named_unit,
   numeric_measure,
   parameter_value,
   plane_angle_measure_with_unit,
   plane_angle_unit,
```


© ISO 2001 – All rights reserved

```
   positive_length_measure,
   positive_plane_angle_measure,
   positive_ratio_measure,
   ratio_measure,
   ratio_measure_with_unit,
   ratio_unit,
   si_unit,
   solid_angle_measure,
   solid_angle_measure_with_unit,
   solid_angle_unit,
   thermodynamic_temperature_measure,
   thermodynamic_temperature_measure_with_unit,
   thermodynamic_temperature_unit,
   time_measure,
   time_measure_with_unit,
   time_unit,
   volume_measure); -- ISO 10303-41

USE FROM qualified_measure_schema
  (descriptive_representation_item,
   measure_representation_item,
   qualified_representation_item,
   precision_qualifier,
   type_qualifier); -- ISO 10303-45

USE FROM person_organization_schema
  (organization,
   organizational_project); -- ISO 10303-41

USE FROM presentation_organization_schema
  (presentation_layer_assignment); -- ISO 10303-46

USE FROM presentation_resource_schema
  (colour,
   colour_rgb); -- ISO 10303-46

USE FROM product_definition_schema
  (product,
   product_definition,
   product_definition_formation,
   product_definition_formation_relationship,
   product_definition_formation_with_specified_source,
   product_definition_relationship,
   product_definition_substitute,
   product_definition_with_associated_documents); -- ISO 10303-41

USE FROM product_property_definition_schema
  (characterized_object,
   product_definition_shape,
   property_definition,
   shape_aspect,
   shape_aspect_relationship); -- ISO 10303-41

USE FROM product_property_representation_schema
  (item_identified_representation_usage,
   property_definition_representation,
   shape_definition_representation,
   shape_representation); -- ISO 10303-41

USE FROM product_structure_schema
  (assembly_component_usage,
   make_from_usage_option,
   product_definition_usage); -- ISO 10303-44

USE FROM representation_schema
  (mapped_item,
   parametric_representation_context,
   representation,
   representation_context,
   representation_item,
```


© ISO 2001 – All rights reserved

```
   representation_item_relationship,
   global_uncertainty_assigned_context); -- ISO 10303-43

USE FROM shape_aspect_definition_schema
  (centre_of_symmetry,
   derived_shape_aspect,
   symmetric_shape_aspect); -- ISO 10303-41

USE FROM shape_dimension_schema
  (angular_location,
   dimensional_characteristic_representation,
   dimensional_location,
   dimensional_size,
   shape_dimension_representation); -- ISO 10303-47

USE FROM topology_schema
  (connected_face_set,
   edge,
   edge_curve,
   edge_loop,
   face,
   face_bound,
   face_outer_bound,
   face_surface,
   loop,
   oriented_closed_shell,
   oriented_edge,
   oriented_open_shell,
   path,
   poly_loop,
   topological_representation_item,
   vertex_shell,
   wire_shell); -- ISO 10303-42
(*
```

NOTE The schemas referenced above can be found in the following parts of ISO 10303:

action_schema	ISO 10303-41
application_context_schema	ISO 10303-41
approval_schema	ISO 10303-41
date_time_schema	ISO 10303-41
document_schema	ISO 10303-41
external_reference_schema	ISO 10303-41
geometric_model_schema	ISO 10303-42
geometry_schema	ISO 10303-42
group_schema	ISO 10303-41
management_resources_schema	ISO 10303-41
material_property_definition_schema	ISO 10303-45
measure_schema	ISO 10303-41
person_organization_schema	ISO 10303-41

© ISO 2001 – All rights reserved

presentation_organization_schema	ISO 10303-46
presentation_resource_schema	ISO 10303-46
product_definition_schema	ISO 10303-41
product_property_definition_schema	ISO 10303-41
product_property_representation_schema	ISO 10303-41
product_structure_schema	ISO 10303-44
qualified_measure_schema	ISO 10303-45
representation_schema	ISO 10303-43
shape_aspect_definition_schema	ISO 10303-47
shape_dimension_schema	ISO 10303-47
topology_schema	ISO 10303-42

5.2.1 Fundamental concepts and assumptions

5.2.1.1 property_definition, representation and representation_item

For a given item, non-shape properties are handled through a combination of **property_definition**, **representation**, and **representation_item**. All non-shape properties are grouped together and evaluated by a function for consistency. The **property_definition** serves as an aggregator of property values for a particular object. The **representation** collects individual elements of representation, usually in the form of name, value pairs that are applicable to a particular **property_definition**. The **representation_item** specifies a specific characteristic and its value. Shape properties are dealt with as a subtype and evaluated separately using **shape_definition**.

5.2.1.2 identifiers and types

Any identifier is used to differentiate between instances of an entity with respect to a scope of use or implementation of the identifier. If used in data exchange, the value of the identifier shall be unique within the exchange file and, additionally, may be unique between the partners in the exchange.

EXAMPLE 1 **Representation_context.context_identifier** may be any user-defined identifier that is used to differentiate contexts. REPCXT1, for example, may identify a **representation_context**.

Any type is used to specify the intent of the instance.

EXAMPLE 2 **Representation_context.context_type** may be ‘parametric’ if the geometry of a part is represented parametrically.

5.2.1.3 units

Units for a particular dimension specified in this part of ISO 10303 must be either globally specified or individually specified for each dimensional value. Different kinds of dimensions (e.g., length versus

© ISO 2001 – All rights reserved

weight), however, may be either specified globally or locally.

5.2.1.4 connector and connection

Connectors are **shape_aspect**s of the plant items that they belong to because they cannot exist independently. Connections are, therefore, a **shape_aspect_relationship**. Connections are also a **shape_-aspect** of the assembly that contains the connection, so connections are also **shape_aspect**s.

5.2.2 Plant spatial configuration type definitions

5.2.2.1 approval_item

An **approval_item** identifies a **change_action**, **piping_system**, or **versioned_action_request** that is assigned an approval status.

EXPRESS specification:

```
*)
TYPE approval_item = SELECT
  (change_action,
   piping_system,
   versioned_action_request);
END_TYPE;
(*
```

5.2.2.2 change_item

A **change_item** identifies the **assembly_component_usage**, **axis_placement_2d**, **axis_placement_3d**, **document**, **ducting_system**, **electrical_system**, **externally_defined_plant_item_definition**, **instrumentation_and_control_system**, **line_branch_connection**, **line_plant_item_branch_-connection**, **line_plant_item_connection**, **line_termination_connection**, **piping_system, plant**, **plant_item_connection**, **plant_item_connector**, **plant_line_definition**, **plant_line_segment_-definition**, **plant_line_segment_termination**, **process_capability**, **product**, **product_definition**, **product_definition_relationship**, **product_definition_shape**, **property_definition**, **reference_-geometry**, **site**, **site_feature**, **sited_plant**, or **structural_system** that can be modified, for which there is a request to modify, or that is the result of a change.

EXPRESS specification:

```
*)
TYPE change_item = SELECT
  (assembly_component_usage,
   axis2_placement_2d,
   axis2_placement_3d,
   document,
   ducting_system,
   electrical_system,
   externally_defined_plant_item_definition,
   instrumentation_and_control_system,
   line_branch_connection,
   line_plant_item_branch_connection,
   line_plant_item_connection,
   line_termination_connection,
   piping_system,
   plant,
   plant_item_connection,
   plant_item_connector,
      plant_line_definition,
```


© ISO 2001 – All rights reserved

```
   plant_line_segment_definition,
   plant_line_segment_termination,
   process_capability,
   product,
   product_definition,
   product_definition_relationship,
   product_definition_shape,
   property_definition,
   reference_geometry,
   site,
   site_feature,
   sited_plant,
   structural_system);
END_TYPE;
(*
```

5.2.2.3 change_life_cycle_item

A **change_life_cycle_item** identifies the **directed_action** that is classified.

EXPRESS specification:

```
*)
TYPE change_life_cycle_item = SELECT
   (directed_action);
END_TYPE;
(*
```

5.2.2.4 classification_item

A **classification_item** identifies the **cableway_system**, **ducting_system**, **electrical_system**, hvac_-component_definition, **hvac_connector**, **instrumentation_and_control_system**, **piping_component_-definition**, **piping_system**, **plant_item_connection**, **plant_item_connector**, **applied_document_-reference**, **product**, **product_definition**, or **structural_system** that is classified.

EXPRESS specification:

```
*)
TYPE classification_item = SELECT
   (cableway_system,
    ducting_system,
    electrical_system,
    hvac_component_definition,
    hvac_connector,
    instrumentation_and_control_system,
    piping_component_definition,
    piping_system,
    plant_item_connection,
    plant_item_connector,
    applied_document_reference,
    product,
    product_definition,
    structural_system);
END_TYPE;
(*
```

5.2.2.5 design_project_item

A **design_project_item** identifies the **product_definition** that is assigned to a **design_project**.

© ISO 2001 – All rights reserved

EXPRESS specification:

```
*)
TYPE design_project_item = SELECT
  (product_definition);
END_TYPE;
(*
```

5.2.2.6 action_request_item

An **action_request_item** identifies the **product** that is assigned to an **action_request**, indicating a request for purchase.

EXPRESS specification:

```
*)
TYPE action_request_item = SELECT
  (product);
END_TYPE;
(*
```

5.2.2.7 date_and_time_item

A **date_and_time_item** identifies the **product** that a **date_and_time** is assigned to.

EXPRESS specification:

```
*)
TYPE date_and_time_item = SELECT
  (change_action,
   change_item,
   change_life_cycle_stage_assignment,
   product);
END_TYPE;
(*
```

5.2.2.8 dated_item

A **dated_item** identifies the **action_directive**, **change_action**, **change_item**, or **product** that a date is assigned to.

EXPRESS specification:

```
*)
TYPE dated_item = SELECT
  (action_directive,
   change_action,
   change_item,
   product);
END_TYPE;
(*
```

5.2.2.9 document_item

A **document_item** identifies the **externally_defined_plant_item_definition**, **heat_tracing_-representation**, **material_property**, **piping_component_class**, **piping_system**, **plant_item_connector**, **plant_line_segment_definition**, **product**, **product_definition**, **product_definition_relationship**,

© ISO 2001 – All rights reserved

property_definition, **representation**, **representation_item**, or **site** that is associated with a **document**.

EXPRESS specification:

```
*)
TYPE document_item = SELECT
  (externally_defined_plant_item_definition,
   heat_tracing_representation,
   material_property,
   piping_component_class,
   piping_system,
   plant_item_connector,
   plant_line_segment_definition,
   product,
   product_definition,
   product_definition_relationship,
   property_definition,
   representation,
   representation_item,
   site);
END_TYPE;
(*
```

5.2.2.10 identified_item

An **identified_item** identifies the **document**, **material_property**, **product_definition**, or **shape_aspect** to which an identifier is assigned.

EXPRESS specification:

```
*)
TYPE identified_item = SELECT
  (document,
   material_property,
   product_definition,
   shape_aspect);
END_TYPE;
(*
```

5.2.2.11 plant_spatial_configuration_organization_item

A **plant_spatial_configuration_organization_item** identifies the **catalogue**, **change_action**, **design_-project**, **document**, **plant**, **product_definition_formation**, **product_definition_relationship**, or **site** that is associated with an **organization**.

EXPRESS specification:

```
*)
TYPE plant_spatial_configuration_organization_item = SELECT
  (catalogue,
   change_action,
   design_project,
   document,
   plant,
   product_definition_formation,
   product_definition_relationship,
   representation,
   site);
END_TYPE;
(*
```


© ISO 2001 – All rights reserved

5.2.2.12 plant_spatial_configuration_person_item

A **plant_spatial_configuration_person_item** identifies the **document**, **plant**, **product_definition_-relationship**, or **site** that is associated with a **person**.

EXPRESS specification:

```
*)
TYPE plant_spatial_configuration_person_item = SELECT
  (document,
   plant,
   product_definition_relationship,
   representation,
   site);
END_TYPE;
(*
```

5.2.2.13 plant_spatial_configuration_person_and_organization_item

A **plant_spatial_configuration_person_and_organization_item** identifies the **change_item**, **plant**, or **site** that is associated with a **person_and_organization**.

EXPRESS specification:

```
*)
TYPE plant_spatial_configuration_person_and_organization_item = SELECT
  (change_item,
   plant,
   site);
END_TYPE;
(*
```

5.2.2.14 purchase_item

A **purchase_item** identifies a **product** that is purchased.

EXPRESS specification:

```
*)
TYPE purchase_item = SELECT
  (product);
END_TYPE;
(*
```

5.2.3 Plant spatial configuration entities

5.2.3.1 Plant spatial configuration entity definitions

5.2.3.1.1 action_request_assignment

A **applied_action_request_assignment** assigns an **action_request** to a set of one or more **product**s.

```
*)
ENTITY applied_action_request_assignment
  SUBTYPE OF (action_request_assignment);
  items : SET [1:?] OF action_request_item;
END_ENTITY;
   (*
```


© ISO 2001 – All rights reserved

Attribute definitions:

items: the set of **product**s that an **action_request** is assigned to.

5.2.3.1.2 applied_approval_assignment

An **applied_approval_assignment** assigns an **approval** to a set of one or more **change_action**s.

EXPRESS specification:

```
*)
ENTITY applied_approval_assignment
  SUBTYPE OF (approval_assignment);
  items : SET [1:?] OF approval_item;
END_ENTITY;
(*
```

Attribute definitions:

items: the set of instances of **change_action**, **piping_system**, or **versioned_action_request** to which an **approval** is assigned.

Associated global rule:

The following global rule defined in this part of ISO 10303 applies to the **applied_approval_-assignment** entity:

- **change_life_cycle_stage_usage_requires_approval** (see 5.2.4.7).

5.2.3.1.3 applied_classification_assignment

An **applied_classification_assignment** assigns a classification to a **cableway_system**, **ducting_system**, **electrical_system**, **hvac_component_definition**, **hvac_connector**, **instrumentation_and_control_-system**, **piping_component_definition**, **piping_system**, **plant_item_connection**, **plant_item_-connector**, **applied_document_reference**, **product**, **product_definition**, or **structural_system**.

EXPRESS specification:

```
*)
ENTITY applied_classification_assignment
  SUBTYPE OF (classification_assignment);
  items : SET [1:?] OF classification_item;
WHERE
  WR1: (NOT (SIZEOF (QUERY (item <* SELF.items |
       NOT ('PLANT_SPATIAL_CONFIGURATION.PLANT_ITEM_CONNECTION' IN
       TYPEOF(item)))) = 0)) OR
       (SIZEOF (TYPEOF (SELF.assigned_class) *
       ['PLANT_SPATIAL_CONFIGURATION.CONNECTION_FUNCTIONAL_CLASS',
       'PLANT_SPATIAL_CONFIGURATION.CONNECTION_MOTION_CLASS'])
       >= 1);
  WR2: (NOT (SIZEOF (QUERY (item <* SELF.items |
       NOT ('PLANT_SPATIAL_CONFIGURATION.PLANT_ITEM_CONNECTOR' IN
       TYPEOF(item)))) = 0)) OR
       (SIZEOF (TYPEOF (SELF.assigned_class) *
       ['PLANT_SPATIAL_CONFIGURATION.CONNECTOR_END_TYPE_CLASS',
       'PLANT_SPATIAL_CONFIGURATION.ELECTRICAL_CONNECTOR_CLASS',
       'PLANT_SPATIAL_CONFIGURATION.PIPING_CONNECTOR_CLASS',
       'PLANT_SPATIAL_CONFIGURATION.EXTERNALLY_DEFINED_CLASS',
       'PLANT_SPATIAL_CONFIGURATION.' +
```


© ISO 2001 – All rights reserved

```
       'STRUCTURAL_LOAD_CONNECTOR_CLASS']) >= 1);
  WR3: (NOT (SIZEOF (QUERY (item <* SELF.items |
       NOT ('PLANT_SPATIAL_CONFIGURATION.PIPING_COMPONENT_DEFINITION' IN
       TYPEOF(item)))) = 0)) OR
       (SIZEOF (TYPEOF (SELF.assigned_class) *
       ['PLANT_SPATIAL_CONFIGURATION.BLANK_FITTING_CLASS',
       'PLANT_SPATIAL_CONFIGURATION.ELBOW_FITTING_CLASS',
       'PLANT_SPATIAL_CONFIGURATION.FLANGE_FITTING_CLASS',
       'PLANT_SPATIAL_CONFIGURATION.' +
       'FLANGE_FITTING_NECK_TYPE_CLASS',
       'PLANT_SPATIAL_CONFIGURATION.PIPE_CLOSURE_FITTING_CLASS',
       'PLANT_SPATIAL_CONFIGURATION.PIPE_CLASS',
       'PLANT_SPATIAL_CONFIGURATION.REDUCER_FITTING_CLASS',
       'PLANT_SPATIAL_CONFIGURATION.SPACER_FITTING_CLASS',
       'PLANT_SPATIAL_CONFIGURATION.SPECIALTY_ITEM_CLASS',
       'PLANT_SPATIAL_CONFIGURATION.SWAGE_FITTING_CLASS',
       'PLANT_SPATIAL_CONFIGURATION.VALVE_CLASS']) >= 1);
END_ENTITY;
(*
```

Attribute definitions:

items: the set of **cableway_system**, **ducting_system**, **electrical_system**, **hvac_component_definition**, **hvac_connector**, **instrumentation_and_control_system**, **piping_component_definition**, **piping_-system**, **plant_item_connection**, **plant_item_connector**, **applied_document_reference**, **product**, **product_definition**, or **structural_system** instances that are assigned to a group.

Formal propositions:

WR1: A **plant_item_connection** shall be assigned either a **connection_functional_class**, a **connection_motion_class**, or a combination of these.

WR2: A **plant_item_connector** shall be assigned either a **connector_end_type_class**, **electrical_-connector_class**, **piping_connector_class**, **structural_load_connector_class**, or a combination of these.

WR3: A **piping_component_definition** shall be assigned either a **blank_fitting_class**, **elbow_fitting_-class**, **flange_fitting_class**, **flange_fitting_neck_type_class**, **pipe_closure_fitting_class**, **pipe_class**, **reducer_fitting_class**, **spacer_fitting_class**, **specialty_item_class**, **swage_fitting_class**, **valve_class**, or a combination of these.

5.2.3.1.4 applied_date_and_time_assignment

An **applied_date_and_time_assignment** assigns a **date_and_time** to a set of one or more **product**s.

EXPRESS specification:

```
*)
ENTITY applied_date_and_time_assignment
  SUBTYPE OF (date_and_time_assignment);
  items : SET [1:?] OF date_and_time_item;
END_ENTITY;
(*
```

Attribute definitions:

items: the set of **product**s that a **date_and_time** is assigned to.

© ISO 2001 – All rights reserved

5.2.3.1.5 applied_date_assignment

An **applied_date_assignment** assigns a **date** to a set of one or more **action_directive**s, **change_action**s, **change_item**s, and **product**s.

EXPRESS specification:

```
*)
ENTITY applied_date_assignment
  SUBTYPE OF (date_assignment);
  items : SET [1:?] OF dated_item;
END_ENTITY;
(*
```

Attribute definitions:

items: the set of **action_directive**s, **change_action**s, **change_item**s, and **product**s that a **date** is assigned to.

Associated global rules:

The following global rules defined in this part of ISO 10303 apply to the **applied_date_assignment** entity:

- **change_action_requires_date** (see 5.2.4.4);
- **change_item_requires_creation_date** (see 5.2.4.5).

5.2.3.1.6 applied_document_reference

An **applied_document_reference** assigns a document to a set of one or more instances of **heat_-tracing_representation**, **piping_component_class**, **piping_system**, **plant_item_connector**, **plant_-line_segment_definition**, **product**, **product_definition**, **product_definition_relationship**, **property_-definition**, **representation**, **representation_item**, **site**, **externally_defined_plant_item_definition**, or **material_property**.

EXPRESS specification:

```
*)
ENTITY applied_document_reference
  SUBTYPE OF (document_reference);
  items : SET [1:?] OF document_item;
END_ENTITY;
(*
```

Attribute definitions:

items: the set of instances of **heat_tracing_representation**, **piping_component_class**, **piping_system**, **plant_item_connector**, **plant_line_segment_definition**, **product**, **product_definition**, **product_-definition_relationship**, **property_definition**, **representation**, **representation_item**, **site**, **externally_-defined_plant_item_definition**, or **material_property** that is associated with a **document**.

5.2.3.1.7 applied_identification_assignment

A **applied_identification_assignment** assigns an identifier to a set of one or more instances of **document**,

© ISO 2001 – All rights reserved

material_property, **product_definition**, or **shape_aspect**.

EXPRESS specification:

```
*)
ENTITY applied_identification_assignment
  SUBTYPE OF (identification_assignment);
  items : SET [1:?] OF identified_item;
WHERE
  WR1: applied_identification_correlation (SELF);
END_ENTITY;
(*
```

Attribute definitions:

items: the set of instances of **product_definition**, **material_property**, or **document** that an identifier is assigned to.

Formal propositions:

WR1: The **applied_identification_correlation** function that correlates roles of identifiers to elements of product data shall be satisfied.

5.2.3.1.8 blank_fitting_class

A **blank_fitting_class** is a type of **group** that classifies the items that are assigned to it as blank fittings.

EXPRESS specification:

```
*)
ENTITY blank_fitting_class
  SUBTYPE OF (group);
WHERE
  WR1: SIZEOF (QUERY (aca <* QUERY (ca <* USEDIN (SELF,
       'PLANT_SPATIAL_CONFIGURATION.CLASSIFICATION_ASSIGNMENT.' +
       'ASSIGNED_CLASS') |
       'PLANT_SPATIAL_CONFIGURATION.APPLIED_CLASSIFICATION_ASSIGNMENT' IN
       TYPEOF (ca)) |
       NOT (SIZEOF (QUERY (it <* aca.items |
       NOT ('PLANT_SPATIAL_CONFIGURATION.PIPING_COMPONENT_DEFINITION' IN
       TYPEOF (it)))) = 0))) = 0;
  WR2: SIZEOF (QUERY (aca <* QUERY (ca <* USEDIN (SELF,
       'PLANT_SPATIAL_CONFIGURATION.CLASSIFICATION_ASSIGNMENT.' +
       'ASSIGNED_CLASS') |
       'PLANT_SPATIAL_CONFIGURATION.APPLIED_CLASSIFICATION_ASSIGNMENT' IN
       TYPEOF (ca)) |
       NOT (SIZEOF (QUERY (pcd <* QUERY (it <* aca.items |
       'PLANT_SPATIAL_CONFIGURATION.PIPING_COMPONENT_DEFINITION' IN
       TYPEOF (it)) |
       NOT (SIZEOF (QUERY (aca1 <* USEDIN (pcd.formation.of_product,
       'PLANT_SPATIAL_CONFIGURATION.' +
       'APPLIED_CLASSIFICATION_ASSIGNMENT.ITEMS') |
       class_in_tree (aca1.assigned_class, 'blank'))) = 1))) = 0
       ))) = 0;
END_ENTITY;
(*
```

Formal propositions:

WR1: A **blank_fitting_class** shall classify items of type **piping_component_definition**.

WR2: A **blank_fitting_class** shall classify items of type **piping_component_definition** that are a

© ISO 2001 – All rights reserved

definition of a **product** that is classified as a ‘blank’.

5.2.3.1.9 bolt_and_nut_component_class

A **bolt_and_nut_component_class** is a type of **group** that classifies the items that are assigned to it as bolts, nuts, or washers.

EXPRESS specification:

```
*)
ENTITY bolt_and_nut_component_class
  SUBTYPE OF (group);
WHERE
  WR1: SIZEOF (QUERY (aca <* QUERY (ca <* USEDIN (SELF,
       'PLANT_SPATIAL_CONFIGURATION.CLASSIFICATION_ASSIGNMENT.' +
       'ASSIGNED_CLASS') |
       'PLANT_SPATIAL_CONFIGURATION.APPLIED_CLASSIFICATION_ASSIGNMENT' IN
       TYPEOF (ca)) |
       NOT (SIZEOF (QUERY (it <* aca.items |
       NOT ('PLANT_SPATIAL_CONFIGURATION.BOLT_AND_NUT_COMPONENT_DEFINITION'
       IN TYPEOF (it)))) = 0))) = 0;
  WR2: SIZEOF (QUERY (aca <* QUERY (ca <* USEDIN (SELF,
       'PLANT_SPATIAL_CONFIGURATION.CLASSIFICATION_ASSIGNMENT.' +
       'ASSIGNED_CLASS') |
       'PLANT_SPATIAL_CONFIGURATION.APPLIED_CLASSIFICATION_ASSIGNMENT' IN
       TYPEOF (ca)) |
       NOT (SIZEOF (QUERY (pcd <* QUERY (it <* aca.items |
       'PLANT_SPATIAL_CONFIGURATION.BOLT_AND_NUT_COMPONENT_DEFINITION' IN
       TYPEOF (it)) |
       NOT (SIZEOF (QUERY (aca1 <* USEDIN (pcd.formation.of_product,
       'PLANT_SPATIAL_CONFIGURATION.' +
       'APPLIED_CLASSIFICATION_ASSIGNMENT.ITEMS') |
       class_in_tree (aca1.assigned_class,
       'bolt and nut component'))) = 1))) = 0
       ))) = 0;
END_ENTITY;
(*
```

Formal propositions:

WR1: A **bolt_and_nut_component_class** shall classify items of type **bolt_and_nut_component_-definition**.

WR2: A **bolt_and_nut_component_class** shall classify items of type **piping_component_definition** that are a definition of a **product** that is classified as a ‘bolt and nut component’.

5.2.3.1.10 bolt_and_nut_component_definition

A **bolt_and_nut_component_definition** is a type of **product_definition** that defines a bolt and nut component.

EXPRESS specification

```
*)
ENTITY bolt_and_nut_component_definition
  SUBTYPE OF (product_definition);
END_ENTITY;
(*
```


© ISO 2001 – All rights reserved

5.2.3.1.11 bolt_and_nut_set_definition

A **bolt_and_nut_set_definition** is a type of **product_definition** that defines a bolt and nut set.

EXPRESS specification

```
*)
ENTITY bolt_and_nut_set_definition
  SUBTYPE OF (product_definition);
END_ENTITY;
(*
```

5.2.3.1.12 cableway_component_class

A **cableway_component_class** is a type of **group** that classifies the items that are assigned to it as cableway components. The name of the **cableway_component_class** further classifies the assigned items.

EXPRESS specification:

```
*)
ENTITY cableway_component_class
  SUBTYPE OF (group);
WHERE
  WR1: SIZEOF (QUERY (aca <* QUERY (ca <* USEDIN (SELF,
       'PLANT_SPATIAL_CONFIGURATION.' +
       'CLASSIFICATION_ASSIGNMENT.ASSIGNED_CLASS') |
       'PLANT_SPATIAL_CONFIGURATION.APPLIED_CLASSIFICATION_ASSIGNMENT' IN
       TYPEOF (ca)) |
       NOT (SIZEOF (QUERY (it <* aca.items |
       NOT ('PLANT_SPATIAL_CONFIGURATION.CABLEWAY_COMPONENT_DEFINITION' IN
       TYPEOF (it)))) = 0))) = 0;
  WR2: SIZEOF (QUERY (aca <* QUERY (ca <* USEDIN (SELF,
       'PLANT_SPATIAL_CONFIGURATION.CLASSIFICATION_ASSIGNMENT.' +
       'ASSIGNED_CLASS') |
       'PLANT_SPATIAL_CONFIGURATION.APPLIED_CLASSIFICATION_ASSIGNMENT' IN
       TYPEOF (ca)) |
       NOT (SIZEOF (QUERY (pcd <* QUERY (it <* aca.items |
       'PLANT_SPATIAL_CONFIGURATION.PIPING_COMPONENT_DEFINITION' IN
       TYPEOF (it)) |
       NOT (SIZEOF (QUERY (aca1 <* USEDIN (pcd.formation.of_product,
       'PLANT_SPATIAL_CONFIGURATION.' +
       'APPLIED_CLASSIFICATION_ASSIGNMENT.ITEMS') |
       class_in_tree (aca1.assigned_class, 'cableway component'))) = 1))) =
0)))
       = 0;
END_ENTITY;
(*
```

Formal propositions:

WR1: A **cableway_component_class** shall classify items of type **cableway_component_definition**.

WR2: A **cableway_component_class** shall classify items of type **cableway_component_definition** that are a definition of a **product** that is classified as a ‘cableway component’.

5.2.3.1.13 cableway_component_definition

A **cableway_component_definition** is a type of **product_definition** that defines a cableway component.

© ISO 2001 – All rights reserved

EXPRESS specification

```
*)
ENTITY cableway_component_definition
  SUBTYPE OF (product_definition);
END_ENTITY;
(*
```

5.2.3.1.14 cableway_connector_class

A **cableway_connector_class** is a type of **group** that classifies the items that are assigned to it as being cableway connectors.

EXPRESS specification:

```
*)
ENTITY cableway_connector_class
  SUBTYPE OF (group);
END_ENTITY;
(*
```

5.2.3.1.15 cableway_system

A **cableway_system** is a type of **product_definition** that identifies a system … *(to be completed when corresponding clause 4.2 definition is available).*

EXPRESS specification:

```
*)
ENTITY cableway_system
  SUBTYPE OF (product_definition);
WHERE
  WR1: SIZEOF (QUERY (pdr <* USEDIN (SELF, 'PLANT_SPATIAL_CONFIGURATION.' +
       'PRODUCT_DEFINITION_RELATIONSHIP.RELATED_PRODUCT_DEFINITION') |
       ('PLANT_SPATIAL_CONFIGURATION.PLANT' IN TYPEOF
       (pdr.relating_product_definition.formation.of_product)) AND
       (pdr.relating_product_definition.frame_of_reference.name =
       'functional occurrence'))) = 1;
END_ENTITY;
(*
```

Formal propositions:

WR1: The **cableway_system** shall be related to exactly one **product_definition** that is the definition of a plant and has a context of ‘functional occurrence’.

5.2.3.1.16 catalogue

A **catalogue** is a type of**document** defined as an **external_source** that records items whose characteristics are standardized.

NOTE Whether the catalogue is a paper-based or digitally-based catalogue is indicated by the value of the attribute **document_type.product_data_type**. **document_type** is referenced the attribute **kind** inherited from **document**, a supertype of **catalogue**.

EXPRESS specification:

```
*)
ENTITY catalogue
```


© ISO 2001 – All rights reserved

```
  SUBTYPE OF (document, external_source);
END_ENTITY;
(*
```

5.2.3.1.17 catalogue_connector

A **catalogue_connector** is a type of**shape_aspect** that is externally defined and identifies a connector whose characteristics are standardised in a library or catalogue.

EXPRESS specification:

```
*)
ENTITY catalogue_connector
  SUBTYPE OF (shape_aspect, externally_defined_item);
WHERE
  WR1: 'PLANT_SPATIAL_CONFIGURATION.CHARACTERIZED_OBJECT' IN
       TYPEOF (SELF.of_shape);
  WR2: 'PLANT_SPATIAL_CONFIGURATION.CATALOGUE' IN TYPEOF (SELF.source);
END_ENTITY;
(*
```

Formal propositions:

WR1: The **catalogue_connector** shall be an aspect of the shape of a **characterized_object**.

WR2: The **catalogue_connector** shall have a **catalogue** as its source.

Associated global rule:

The following global rule defined in this part of ISO 10303 applies to the **catalogue_connector** entity:

- **subtype_mandatory_externally_defined_item** (see 5.2.4.16).

5.2.3.1.18 catalogue_item

A **catalogue_item** is an **externally_defined_plant_item_definition** that identifies an item whose characteristics are standardized and have been recorded in a library or catalogue.

EXPRESS specification:

```
*)
ENTITY catalogue_item
  SUBTYPE OF (externally_defined_plant_item_definition);
WHERE
  WR1: 'PLANT_SPATIAL_CONFIGURATION.CATALOGUE' IN TYPEOF (SELF.source);
  WR2: SELF.frame_of_reference.name = 'physical definition';
END_ENTITY;
(*
```

Formal propositions:

WR1: A **catalogue_item** shall have a **catalogue** as the **external_source**.

WR2: A **catalogue_item** shall have a **frame_of_reference name** of ‘catalogue definition’.

Associated global rules:

The following global rules defined in this part of ISO 10303 apply to the **catalogue_item** entity:

© ISO 2001 – All rights reserved

- **application_context_requires_ap_definition** (see 5.2.4.1);
- **dependent_instantiable_application_context** (see 5.2.4.9);
- **dependent_instantiable_product_definition_context** (see 5.2.4.11);
- **product_definition_context_name_constraint** (see 5.2.4.13);
- **subtype_mandatory_externally_defined_item** (see 5.2.4.16).

5.2.3.1.19 change_action

A **change_action** is a type of **directed_action** that identifies a change, or a request for a change.

EXPRESS specification:

```
*)
ENTITY change_action
  SUBTYPE OF (directed_action);
WHERE
  WR1: SIZEOF (QUERY (ca <* USEDIN (SELF, 'PLANT_SPATIAL_CONFIGURATION.' +
       'ACTION_ASSIGNMENT.ASSIGNED_ACTION') |
       'PLANT_SPATIAL_CONFIGURATION.' +
       'PLANT_SPATIAL_CONFIGURATION_CHANGE_ASSIGNMENT' IN
       TYPEOF (ca))) >= 1;
  WR2: SIZEOF (QUERY (ar <* SELF\directed_action.directive.requests |
       NOT (SIZEOF (USEDIN (ar, 'PLANT_SPATIAL_CONFIGURATION.' +
       'ACTION_REQUEST_SOLUTION.REQUEST')) = 1))) = 0;
  WR3: SIZEOF (USEDIN (SELF, 'PLANT_SPATIAL_CONFIGURATION.ACTION_STATUS.' +
       'ASSIGNED_ACTION')) = 1;
END_ENTITY;
(*
```

Formal propositions:

WR1: A **change_action** shall be assigned by at least one **plant_spatial_configuration_change_-assignment**.

WR2: Each **versioned_action_request** that is referenced by a **change_action** shall have exactly one **action_request_solution**.

WR3: Each **change_action** shall be assigned exactly one **action_status**.

Associated global rules:

The following global rules defined in this part of ISO 10303 apply to the **change_action** entity:

- **change_action_requires_date** (see 5.2.4.4);

5.2.3.1.20 change_item_id_assignment

A **change_item_id_assignment** assigns a name to a set of one or moreinstances selected by **change_-item**.

EXPRESS specification:

```
*)
ENTITY change_item_id_assignment
```


© ISO 2001 – All rights reserved

```
  SUBTYPE OF (name_assignment);
  items : SET [1:?] OF change_item;
END_ENTITY;
(*
```

Attribute definitions:

items: the set of instances selected by **change_item** to which a name is assigned.

Associated global rule:

The following global rule defined in this part of ISO 10303 applies to the **change_item_id_assignment** entity:

- **change_item_requires_id** (see 5.2.4.6).

5.2.3.1.21 change_life_cycle_stage_assignment

A **change_life_cycle_stage_assignment** is a type of**group_assignment** that classifies a **directed_action** with a life cycle stage class.

EXPRESS specification:

```
*)
ENTITY change_life_cycle_stage_assignment
  SUBTYPE OF (group_assignment);
  items : SET [1:?] OF change_life_cycle_item;
END_ENTITY;
(*
```

Attribute definitions:

items: One or more **directed_action** that is being classified according to a class of life cycle stage by the assigned_group.

5.2.3.1.22 clamp_component_definition

A **clamp_component_definition** is a type of **product_definition** that defines a clamp used to make a connection between plant items.

EXPRESS specification

```
*)
ENTITY clamp_component_definition
  SUBTYPE OF (product_definition);
END_ENTITY;
(*
```

5.2.3.1.23 clamp_set_definition

A **clamp_set_definition** is a type of **product_definition** that defines a collection of clamp components.

EXPRESS specification

```
*)
ENTITY clamp_set_definition
  SUBTYPE OF (product_definition);
   END_ENTITY;
```


© ISO 2001 – All rights reserved

```
(*
```

5.2.3.1.24 connection_functional_class

A **connection_functional_class** is a type of**group** that classifies items that are assigned to it as belonging to a common functional class of connections.

EXPRESS specification:

```
*)
ENTITY connection_functional_class
  SUBTYPE OF (group);
END_ENTITY;
(*
```

5.2.3.1.25 connection_material_definition

A **connection_material_definition** is a type of **product_definition** that defines a connection material.

EXPRESS specification

```
*)
ENTITY connection_material_definition
  SUBTYPE OF (product_definition);
END_ENTITY;
(*
```

5.2.3.1.26 connection_motion_class

A **connection_motion_class** is a type of **group** that classifies the connection motion of the items that are assigned to it.

EXPRESS specification:

```
*)
ENTITY connection_motion_class
  SUBTYPE OF (group);
WHERE
  WR1: SELF.name IN ['flexible', 'locked orientation'];
END_ENTITY;
(*
```

Formal propositions:

WR1: The name of the **connection_motion_class** shall be ‘flexible’ or ‘locked orientation’.

5.2.3.1.27 connection_node

A **connection_node** is a type of **shape_aspect** that is part of the definition of a piping system, and connects more than one **line_termination_connection**s.

A **connection_node** shall be used for a connection that involves the termination of more than two lines at a single point. The **connection_node** is the junction for each of the line to line terminations that are involved in the line to line connection.

NOTE There is a 2 or more cardinality between the line connection and line termination. The most common case is

© ISO 2001 – All rights reserved

that two line terminations are connected by a line connection, but there are branches where more than 2 lines are terminated at a single line connection. For the case of two lines being terminated, the line to line connection is simply a connection relationship between 2 line terminations. For the more than two, there needs to be a **shape_aspect** that models the connection point at which all of the line terminations are connected. This connection point is represented by the **connection_node**. The **connection_node** represents the logical connection point for all line terminations within a single line connection when there are more than two lines being connected in a single connection.

EXPRESS specification:

```
*)
ENTITY connection_node
  SUBTYPE OF (shape_aspect);
WHERE
  WR1: 'PLANT_SPATIAL_CONFIGURATION.PIPING_SYSTEM'
       IN TYPEOF (SELF.of_shape.definition);
  WR2: SIZEOF (QUERY (sar <* USEDIN (SELF,
       'PLANT_SPATIAL_CONFIGURATION.SHAPE_ASPECT_RELATIONSHIP.' +
       'RELATING_SHAPE_ASPECT') |
       'PLANT_SPATIAL_CONFIGURATION.LINE_TERMINATION_CONNECTION' IN
       TYPEOF (sar))) >= 2;
END_ENTITY;
(*
```

Formal propositions:

WR1: A **connection_node** shall be an aspect of the definition of the shape of a **piping_system**.

WR2: A **connection_node** shall be the **relating_shape_aspect** for at least two **line_termination_-connection**s.

5.2.3.1.28 connector_end_type_class

A **connector_end_type_class** is a type of **group** that classifies the end type of the connectors that are assigned to it.

EXPRESS specification:

```
*)
ENTITY connector_end_type_class
  SUBTYPE OF (group);
END_ENTITY;
(*
```

5.2.3.1.29 descriptive_colour

A **descriptive_colour** is a type of **descriptive_representation_item** that identifies a colour.

EXPRESS specification:

```
*)
ENTITY descriptive_colour
  SUBTYPE OF (colour, descriptive_representation_item);
END_ENTITY;
(*
```

5.2.3.1.30 design_project

A **design_project** is a type of **organization** that identifies a task with a defined scope and purpose.

© ISO 2001 – All rights reserved

EXPRESS specification:

```
*)
ENTITY design_project
  SUBTYPE OF (organization);
WHERE
  WR1: SIZEOF (USEDIN (SELF, 'PLANT_SPATIAL_CONFIGURATION.' +
       'ORGANIZATION_ASSIGNMENT.ASSIGNED_ORGANIZATION')) >= 1;
END_ENTITY;
(*
```

Formal propositions:

WR1: Each **design_project** shall be assigned to product data by at least one **organization_assignment**.

5.2.3.1.31 design_project_assignment

A **design_project_assignment** assigns a **product_definition** to a **design_project**.

EXPRESS specification:

```
*)
ENTITY design_project_assignment
  SUBTYPE OF (organization_assignment);
  items : SET [1:?] OF design_project_item;
WHERE
  WR1: 'PLANT_SPATIAL_CONFIGURATION.DESIGN_PROJECT' IN
       TYPEOF (SELF.assigned_organization);
END_ENTITY;
(*
```

Attribute definitions:

items: the set of **product_definition**s that are assigned to a **design_project**.

Formal propositions:

WR1: The **organization** that is assigned by a **design_project_assignment** shall be a **design_project**.

5.2.3.1.32 ducting_system

A **ducting_system** is a type of **product_definition** that identifies a system that controls the temperature, humidity, cleanliness, and circulation of environmental air.

EXPRESS specification:

```
*)
ENTITY ducting_system
  SUBTYPE OF (product_definition);
WHERE
  WR1: SIZEOF (QUERY (pdr <* USEDIN (SELF, 'PLANT_SPATIAL_CONFIGURATION.' +
       'PRODUCT_DEFINITION_RELATIONSHIP.RELATED_PRODUCT_DEFINITION') |
       ('PLANT_SPATIAL_CONFIGURATION.PLANT' IN TYPEOF
       (pdr.relating_product_definition.formation.of_product)) AND
       (pdr.relating_product_definition.frame_of_reference.name =
       'functional occurrence'))) = 1;
END_ENTITY;
(*
```


© ISO 2001 – All rights reserved

Formal propositions:

WR1: The **ducting_system** shall be related to exactly one **product_definition** that is the definition of a plant and has a context of ‘functional occurrence’.

5.2.3.1.33 elbow_fitting_class

An **elbow_fitting_class** is a type of group that classifies the items that are assigned to it as elbow fittings. The name of the **elbow_fitting_class** further classifies the assigned items.

EXPRESS specification:

```
*)
ENTITY elbow_fitting_class
  SUBTYPE OF (group);
WHERE
  WR1: SIZEOF (QUERY (aca <* QUERY (ca <* USEDIN (SELF,
       'PLANT_SPATIAL_CONFIGURATION.' +
       'CLASSIFICATION_ASSIGNMENT.ASSIGNED_CLASS') |
       'PLANT_SPATIAL_CONFIGURATION.APPLIED_CLASSIFICATION_ASSIGNMENT' IN
       TYPEOF (ca)) |
       NOT (SIZEOF (QUERY (it <* aca.items |
       NOT ('PLANT_SPATIAL_CONFIGURATION.PIPING_COMPONENT_DEFINITION' IN
       TYPEOF (it)))) = 0))) = 0;
  WR2: SIZEOF (QUERY (aca <* QUERY (ca <* USEDIN (SELF,
       'PLANT_SPATIAL_CONFIGURATION.CLASSIFICATION_ASSIGNMENT.' +
       'ASSIGNED_CLASS') |
       'PLANT_SPATIAL_CONFIGURATION.APPLIED_CLASSIFICATION_ASSIGNMENT' IN
       TYPEOF (ca)) |
       NOT (SIZEOF (QUERY (pcd <* QUERY (it <* aca.items |
       'PLANT_SPATIAL_CONFIGURATION.PIPING_COMPONENT_DEFINITION' IN
       TYPEOF (it)) |
       NOT (SIZEOF (QUERY (aca1 <* USEDIN (pcd.formation.of_product,
       'PLANT_SPATIAL_CONFIGURATION.' +
       'APPLIED_CLASSIFICATION_ASSIGNMENT.ITEMS') |
       class_in_tree (aca1.assigned_class, 'elbow'))) = 1))) = 0)))
       = 0;
END_ENTITY;
(*
```

Formal propositions:

WR1: An **elbow_fitting_class** shall classify items of type **piping_component_definition**.

WR2: An **elbow_fitting_class** shall classify items of type **piping_component_definition** that are a definition of a **product** that is classified as a ‘elbow’.

5.2.3.1.34 electrical_connector_class

An **electrical_connector_class** is a type of **group** that classifies the items that are assigned to it as being electrical connectors. The name of the **electrical_connector_class** further classifies the assigned items.

EXPRESS specification:

```
*)
ENTITY electrical_connector_class
  SUBTYPE OF (group);
END_ENTITY;
(*
```


© ISO 2001 – All rights reserved

5.2.3.1.35 electrical_system

An **electrical_system** is a type of **product_definition** that identifies a system of wiring, switches, relays and other equipment associated with receiving and distributing electrical power.

EXPRESS specification:

```
*)
ENTITY electrical_system
  SUBTYPE OF (product_definition);
WHERE
  WR1: SIZEOF (QUERY (pdr <* USEDIN (SELF, 'PLANT_SPATIAL_CONFIGURATION.' +
       'PRODUCT_DEFINITION_RELATIONSHIP.RELATED_PRODUCT_DEFINITION') |
       ('PLANT_SPATIAL_CONFIGURATION.PLANT' IN TYPEOF
       (pdr.relating_product_definition.formation.of_product)) AND
       (pdr.relating_product_definition.frame_of_reference.name =
       'functional occurrence'))) = 1;
END_ENTITY;
(*
```

Formal propositions:

WR1: The **electrical_system** shall be related to exactly one **product_definition** that is the definition of a plant and has a context of ‘functional occurrence’.

5.2.3.1.36 externally_defined_class

An **externally_defined_class** is a type of**group** that classifies an item and is defined by reference to an external source.

NOTE An external source can be an ISO 13584 classification table [13]. This source should be specified as a **known_source** (see 5.2.3.1.52) and referenced with **externally_defined_item.source**.

EXPRESS specification:

```
*)
ENTITY externally_defined_class
  SUBTYPE OF (group, externally_defined_item);
WHERE
  WR1: SIZEOF (QUERY (aca <* QUERY (ca <* USEDIN (SELF,
       'PLANT_SPATIAL_CONFIGURATION.CLASSIFICATION_ASSIGNMENT.' +
       'ASSIGNED_CLASS') |
       'PLANT_SPATIAL_CONFIGURATION.APPLIED_CLASSIFICATION_ASSIGNMENT' IN
       TYPEOF (ca)) |
       NOT (SIZEOF (QUERY (it <* aca.items |
       NOT ((SIZEOF (TYPEOF (it) *
       ['PLANT_SPATIAL_CONFIGURATION.ELECTRICAL_SYSTEM',
       'PLANT_SPATIAL_CONFIGURATION.DUCTING_SYSTEM',
       'PLANT_SPATIAL_CONFIGURATION.INSTRUMENTATION_AND_CONTROL_SYSTEM',
       'PLANT_SPATIAL_CONFIGURATION.PIPING_SYSTEM',
       'PLANT_SPATIAL_CONFIGURATION.PLANT',
       'PLANT_SPATIAL_CONFIGURATION.PLANT_ITEM_CONNECTOR',
       'PLANT_SPATIAL_CONFIGURATION.PIPING_COMPONENT_DEFINITION',
       'PLANT_SPATIAL_CONFIGURATION.STRUCTURAL_SYSTEM']) = 1) OR
       (('PLANT_SPATIAL_CONFIGURATION.PRODUCT_DEFINITION'
       IN TYPEOF (it)) AND
       (SIZEOF (QUERY (pc <*
       it.formation.of_product.frame_of_reference |
       pc.discipline_type = 'process plant')) = 1))))) = 0))) = 0;
END_ENTITY;
(*
```


© ISO 2001 – All rights reserved

Formal proposition:

WR1: An **externally_defined_class** shall classify either an **electrical_system**, **ducting_system**, **instrumentation_and_control_system**, **piping_system**, **plant**, **plant_item_connector**, **piping_-component_definition**, **structural_system**, or **product_definition** that is the definition of a plant item.

Associated global rules:

The following global rules defined in this part of ISO 10303 apply to the **externally_defined_class** entity:

- **subtype_mandatory_externally_defined_item** (see 5.2.4.16);
- **subtype_mandatory_pre_defined_item** (see 5.2.4.17).

5.2.3.1.37 externally_defined_document

An **externally_defined_document** is a type of **document** that is defined by reference to an external source.

EXPRESS specification:

```
*)
ENTITY externally_defined_document
  SUBTYPE OF (document, externally_defined_item);
END_ENTITY;
(*
```

5.2.3.1.38 externally_defined_plant_item_definition

An **externally_defined_plant_item_definition** is a type of**product_definition** that identifies an item or piece of equipment that may be used as a component of a plant and is defined by reference to an external source.

NOTE An external source can be a ISO 13584 library [13]. This source should be specified as a **known_source** (see 5.2.3.1.52) and referenced with **externally_defined_item.source**.

EXPRESS specification:

```
*)
ENTITY externally_defined_plant_item_definition
  SUBTYPE OF (product_definition, externally_defined_item);
END_ENTITY;
(*
```

Associated global rules:

The following global rules defined in this part of ISO 10303 apply to the **externally_defined_plant_-item_definition** entity:

- **application_context_requires_ap_definition** (see 5.2.4.1);
- **dependent_instantiable_application_context** (see 5.2.4.9);
- **dependent_instantiable_product_context** (see 5.2.4.10);

© ISO 2001 – All rights reserved

- **dependent_instantiable_product_definition_context** (see 5.2.4.11);
- **product_context_discipline_type_constraint** (see 5.2.4.12);
- **product_definition_context_name_constraint** (see 5.2.4.13);
- **subtype_mandatory_externally_defined_item** (see 5.2.4.16);
- **subtype_mandatory_pre_defined_item** (see 5.2.4.17).

5.2.3.1.39 externally_defined_representation_item

An **externally_defined_representation_item** is a type of**representation_item** that has meaning defined in a source outside of this part of ISO 10303.

EXPRESS specification:

```
*)
ENTITY externally_defined_representation_item
  SUBTYPE OF (representation_item, externally_defined_item);
END_ENTITY;
(*
```

5.2.3.1.40 flange_fitting_class

A **flange_fitting_class** is a type of **group** that classifies the items that are assigned to it as flange fittings.

EXPRESS specification:

```
*)
ENTITY flange_fitting_class
  SUBTYPE OF (group);
WHERE
  WR1: SIZEOF (QUERY (aca <* QUERY (ca <* USEDIN (SELF,
       'PLANT_SPATIAL_CONFIGURATION.' +
       'CLASSIFICATION_ASSIGNMENT.ASSIGNED_CLASS') |
       'PLANT_SPATIAL_CONFIGURATION.APPLIED_CLASSIFICATION_ASSIGNMENT' IN
       TYPEOF (ca)) |
       NOT (SIZEOF (QUERY (it <* aca.items |
       NOT ('PLANT_SPATIAL_CONFIGURATION.PIPING_COMPONENT_DEFINITION' IN
       TYPEOF (it)))) = 0))) = 0;
  WR2: SIZEOF (QUERY (aca <* QUERY (ca <* USEDIN (SELF,
       'PLANT_SPATIAL_CONFIGURATION.' +
       'CLASSIFICATION_ASSIGNMENT.ASSIGNED_CLASS') |
       'PLANT_SPATIAL_CONFIGURATION.APPLIED_CLASSIFICATION_ASSIGNMENT' IN
       TYPEOF (ca)) |
       NOT (SIZEOF (QUERY (pcd <* QUERY (it <* aca.items |
       'PLANT_SPATIAL_CONFIGURATION.PIPING_COMPONENT_DEFINITION' IN
       TYPEOF (it)) |
       NOT (SIZEOF (QUERY (aca1 <* USEDIN (pcd.formation.of_product,
       'PLANT_SPATIAL_CONFIGURATION.' +
       'APPLIED_CLASSIFICATION_ASSIGNMENT.ITEMS') |
       class_in_tree (aca1.assigned_class, 'flange'))) = 1))) = 0)))
       = 0;
END_ENTITY;
(*
```

Formal propositions:

WR1: A **flange_fitting_class** shall classify items of type **piping_component_definition**.

© ISO 2001 – All rights reserved

WR2: A **flange_fitting_class** shall classify items of type **piping_component_definition** that are a definition of a **product** that is categorized as a 'flange'.

5.2.3.1.41 flange_fitting_neck_type_class

A **flange_fitting_neck_type_class** is a type of **group** that classifies the neck type of the flange fittings items that are assigned to it.

EXPRESS specification:

```
*)
ENTITY flange_fitting_neck_type_class
  SUBTYPE OF (group);
WHERE
  WR1: SIZEOF (QUERY (aca <* QUERY (ca <* USEDIN (SELF,
       'PLANT_SPATIAL_CONFIGURATION.CLASSIFICATION_ASSIGNMENT.' +
       'ASSIGNED_CLASS') |
       'PLANT_SPATIAL_CONFIGURATION.APPLIED_CLASSIFICATION_ASSIGNMENT' IN
       TYPEOF (ca)) |
       NOT (SIZEOF (QUERY (it <* aca.items |
       NOT ('PLANT_SPATIAL_CONFIGURATION.PIPING_COMPONENT_DEFINITION' IN
       TYPEOF (it)))) = 0))) = 0;
  WR2: SIZEOF (QUERY (aca <* QUERY (ca <* USEDIN (SELF,
       'PLANT_SPATIAL_CONFIGURATION.CLASSIFICATION_ASSIGNMENT.' +
       'ASSIGNED_CLASS') |
       'PLANT_SPATIAL_CONFIGURATION.APPLIED_CLASSIFICATION_ASSIGNMENT' IN
       TYPEOF (ca)) |
       NOT (SIZEOF (QUERY (pcd <* QUERY (it <* aca.items |
       'PLANT_SPATIAL_CONFIGURATION.PIPING_COMPONENT_DEFINITION' IN
       TYPEOF (it)) |
       NOT (SIZEOF (QUERY (aca1 <* USEDIN (pcd.formation.of_product,
       'PLANT_SPATIAL_CONFIGURATION.' +
       'APPLIED_CLASSIFICATION_ASSIGNMENT.ITEMS') |
       class_in_tree (aca1.applied_classification, 'flange')))
       = 1))) = 0))) = 0;
END_ENTITY;
(*
```

Formal propositions:

WR1: A **flange_fitting_neck_type_classification** shall classify items of type **piping_component_-definition**.

WR2: A **flange_fitting_neck_type_classification** shall classify items of type **piping_component_-definition** that are a definition of a **product** that is categorized as a 'flange'.

5.2.3.1.42 heat_tracing_representation

A **heat_tracing_representation** is a type of**representation** that represents the means utilized to impart a temperature increase by an external wrapping or coiling.

EXPRESS specification:

```
*)
ENTITY heat_tracing_representation
  SUBTYPE OF (representation);
END_ENTITY;
(*
```


© ISO 2001 – All rights reserved

5.2.3.1.43 hvac_branch_connection

An **hvac_branch_connection** is a type of **shape_aspect_relationship** that identifies the connection between an HVAC section segment and a branch.

EXPRESS specification:

```
*)
ENTITY hvac_branch_connection
  SUBTYPE OF (shape_aspect_relationship);
WHERE
  WR1: SELF.description = 'branch location';
  WR2: 'PLANT_SPATIAL_CONFIGURATION.HVAC_SECTION_SEGMENT_DEFINITION'
       IN TYPEOF (SELF.relating_shape_aspect.of_shape.definition);
  WR3: 'PLANT_SPATIAL_CONFIGURATION.HVAC_SECTION_SEGMENT_TERMINATION'
       IN TYPEOF (SELF.related_shape_aspect);
END_ENTITY;
(*
```

Formal propositions:

WR1: The value of **hvac_branch_connection.description** shall be ‘branch location’.

WR2: The **product_definition** that the **relating_shape_aspect** of an **hvac_branch_connection** is related to shall be an **hvac_section_segment_definition**.

WR3: The **related_shape_aspect** of an **hvac_branch_connection** shall be an **hvac_section_segment_-termination**.

5.2.3.1.44 hvac_component_definition

An **hvac_component_definition** is a type of **product_definition** that defines an HVAC component.

EXPRESS specification

```
*)
ENTITY hvac_component_definition
  SUBTYPE OF (product_definition);
END_ENTITY;
(*
```

5.2.3.1.45 hvac_connector

An **hvac_connector** is a type of **shape_aspect** that identifies a feature of a plant item that is designed to connect to another connector.

EXPRESS specification:

```
*)
ENTITY hvac_connector
  SUBTYPE OF(shape_aspect);
WHERE
  WR1: SELF\shape_aspect.of_shape\property_definition.
       definition\product_definition.
       frame_of_reference\application_context_element.name IN
       ['functional definition', 'physical definition',
       'functional occurrence', 'physical occurrence'];
  WR2: (NOT (SIZEOF (QUERY (pd <* USEDIN (SELF,
       'PLANT_SPATIAL_CONFIGURATION.PROPERTY_DEFINITION.DEFINITION') |
       pd.name = 'hvac service characteristics')) >= 1)) OR
```


© ISO 2001 – All rights reserved

```
      (SIZEOF (QUERY (sc <* QUERY (pd <* USEDIN (SELF,
      'PLANT_SPATIAL_CONFIGURATION.PROPERTY_DEFINITION.DEFINITION') |
      pd.name = 'hvac service characteristics') |
      NOT (SIZEOF (QUERY (pdr <* USEDIN (sc,
      'PLANT_SPATIAL_CONFIGURATION.' +
      'PROPERTY_DEFINITION_REPRESENTATION.DEFINITION') |
      pdr.used_representation.name =
      'design service characteristics')) = 1))) = 0);
  WR3: (NOT (SIZEOF (QUERY (pd <* USEDIN (SELF,
      'PLANT_SPATIAL_CONFIGURATION.PROPERTY_DEFINITION.DEFINITION') |
      (pd.name = 'hvac service characteristics') )) >= 1)) OR
      (SIZEOF (QUERY (sc <* QUERY (pd <* USEDIN (SELF,
      'PLANT_SPATIAL_CONFIGURATION.PROPERTY_DEFINITION.DEFINITION') |
      pd.name = 'hvac service characteristics') |
      NOT (SIZEOF (QUERY (dsc <* QUERY (pdr <* USEDIN (sc,
      'PLANT_SPATIAL_CONFIGURATION.' +
      'PROPERTY_DEFINITION_REPRESENTATION.DEFINITION') |
      pdr.used_representation.name = 'design service characteristics') |
      SIZEOF (dsc.used_representation.items) >= 2)) = 1))) = 0);
  WR4: ((NOT (SIZEOF (QUERY (pd <* USEDIN (SELF,
      'PLANT_SPATIAL_CONFIGURATION.PROPERTY_DEFINITION.DEFINITION') |
      pd.name = 'hvac service characteristics')) >= 1)) OR
      (SIZEOF (QUERY (sc <* QUERY (pd <* USEDIN (SELF,
      'PLANT_SPATIAL_CONFIGURATION.PROPERTY_DEFINITION.DEFINITION') |
      pd.name = 'hvac service characteristics') |
      NOT (SIZEOF (QUERY (dsc <* QUERY (pdr <* USEDIN (sc,
      'PLANT_SPATIAL_CONFIGURATION.' +
      'PROPERTY_DEFINITION_REPRESENTATION.DEFINITION') |
      pdr.used_representation.name = 'design service characteristics') |
      {1 <= SIZEOF (QUERY (it <* dsc.used_representation.items |
      ('PLANT_SPATIAL_CONFIGURATION.MEASURE_REPRESENTATION_ITEM' IN
      TYPEOF (it)) AND
      (it.name IN ['pressure', 'minimum pressure',
      'maximum pressure']))) <= 2})) = 1))) = 0));
  WR5: ((NOT (SIZEOF (QUERY (pd <* USEDIN (SELF,
      'PLANT_SPATIAL_CONFIGURATION.PROPERTY_DEFINITION.DEFINITION') |
      pd.name = 'hvac service characteristics')) >= 1)) OR
      (SIZEOF (QUERY (sc <* QUERY (pd <* USEDIN (SELF,
      'PLANT_SPATIAL_CONFIGURATION.PROPERTY_DEFINITION.DEFINITION') |
      pd.name = 'hvac service characteristics') |
      NOT (SIZEOF (QUERY (dsc <* QUERY (pdr <* USEDIN (sc,
      'PLANT_SPATIAL_CONFIGURATION.' +
      'PROPERTY_DEFINITION_REPRESENTATION.DEFINITION') |
      pdr.used_representation.name = 'design service characteristics') |
      SIZEOF (QUERY (it <* dsc.used_representation.items |
      ('PLANT_SPATIAL_CONFIGURATION.MEASURE_REPRESENTATION_ITEM' IN
      TYPEOF (it)) AND
      (it.name = 'pressure'))) <= 1)) = 1))) = 0));
  WR6: ((NOT (SIZEOF (QUERY (pd <* USEDIN (SELF,
      'PLANT_SPATIAL_CONFIGURATION.PROPERTY_DEFINITION.DEFINITION') |
      pd.name = 'hvac service characteristics')) >= 1)) OR
      (SIZEOF (QUERY (sc <* QUERY (pd <* USEDIN (SELF,
      'PLANT_SPATIAL_CONFIGURATION.PROPERTY_DEFINITION.DEFINITION') |
      pd.name = 'hvac service characteristics') |
      NOT (SIZEOF (QUERY (dsc <* QUERY (pdr <* USEDIN (sc,
      'PLANT_SPATIAL_CONFIGURATION.' +
      'PROPERTY_DEFINITION_REPRESENTATION.DEFINITION') |
      pdr.used_representation.name = 'design service characteristics') |
      SIZEOF (QUERY (it <* dsc.used_representation.items |
      ('PLANT_SPATIAL_CONFIGURATION.MEASURE_REPRESENTATION_ITEM' IN
      TYPEOF (it)) AND
      (it.name = 'minimum pressure'))) <= 1)) = 1))) = 0));
  WR7: ((NOT (SIZEOF (QUERY (pd <* USEDIN (SELF,
      'PLANT_SPATIAL_CONFIGURATION.PROPERTY_DEFINITION.DEFINITION') |
      pd.name = 'hvac service characteristics')) >= 1)) OR
      (SIZEOF (QUERY (sc <* QUERY (pd <* USEDIN (SELF,
      'PLANT_SPATIAL_CONFIGURATION.PROPERTY_DEFINITION.DEFINITION') |
      pd.name = 'hvac service characteristics') |
      NOT (SIZEOF (QUERY (dsc <* QUERY (pdr <* USEDIN (sc,
      'PLANT_SPATIAL_CONFIGURATION.' +
```


© ISO 2001 – All rights reserved

```
      'PROPERTY_DEFINITION_REPRESENTATION.DEFINITION') |
      pdr.used_representation.name = 'design service characteristics') |
      SIZEOF (QUERY (it <* dsc.used_representation.items |
      ('PLANT_SPATIAL_CONFIGURATION.MEASURE_REPRESENTATION_ITEM' IN
      TYPEOF (it)) AND
      (it.name = 'maximum pressure'))) <= 1)) = 1))) = 0));
 WR8: ((NOT (SIZEOF (QUERY (pd <* USEDIN (SELF,
      'PLANT_SPATIAL_CONFIGURATION.PROPERTY_DEFINITION.DEFINITION') |
      pd.name = 'hvac service characteristics')) >= 1)) OR
      (SIZEOF (QUERY (sc <* QUERY (pd <* USEDIN (SELF,
      'PLANT_SPATIAL_CONFIGURATION.PROPERTY_DEFINITION.DEFINITION') |
      pd.name = 'hvac service characteristics') |
      NOT (SIZEOF (QUERY (dsc <* QUERY (pdr <* USEDIN (sc,
      'PLANT_SPATIAL_CONFIGURATION.' +
      'PROPERTY_DEFINITION_REPRESENTATION.DEFINITION') |
      pdr.used_representation.name = 'design service characteristics') |
      {1 <= SIZEOF (QUERY (it <* dsc.used_representation.items |
      (SIZEOF (TYPEOF (it) *
      ['PLANT_SPATIAL_CONFIGURATION.MEASURE_REPRESENTATION_ITEM',
      'PLANT_SPATIAL_CONFIGURATION.' +
      'THERMODYNAMIC_TEMPERATURE_MEASURE_WITH_UNIT']) = 2) AND
      (it.name IN ['temperature', 'minimum temperature',
      'maximum temperature']))) <= 2})) = 1))) = 0));
 WR9: ((NOT (SIZEOF (QUERY (pd <* USEDIN (SELF,
      'PLANT_SPATIAL_CONFIGURATION.PROPERTY_DEFINITION.DEFINITION') |
      pd.name = 'hvac service characteristics')) >= 1)) OR
      (SIZEOF (QUERY (sc <* QUERY (pd <* USEDIN (SELF,
      'PLANT_SPATIAL_CONFIGURATION.PROPERTY_DEFINITION.DEFINITION') |
      pd.name = 'hvac service characteristics') |
      NOT (SIZEOF (QUERY (dsc <* QUERY (pdr <* USEDIN (sc,
      'PLANT_SPATIAL_CONFIGURATION.' +
      'PROPERTY_DEFINITION_REPRESENTATION.DEFINITION') |
      pdr.used_representation.name = 'design service characteristics') |
      SIZEOF (QUERY (it <* dsc.used_representation.items |
      (SIZEOF (TYPEOF (it) *
      ['PLANT_SPATIAL_CONFIGURATION.MEASURE_REPRESENTATION_ITEM',
      'PLANT_SPATIAL_CONFIGURATION.' +
      'THERMODYNAMIC_TEMPERATURE_MEASURE_WITH_UNIT']) = 2) AND
      (it.name = 'temperature'))) <= 1)) = 1))) = 0));
WR10: ((NOT (SIZEOF (QUERY (pd <* USEDIN (SELF,
      'PLANT_SPATIAL_CONFIGURATION.PROPERTY_DEFINITION.DEFINITION') |
      pd.name = 'hvac service characteristics')) >= 1)) OR
      (SIZEOF (QUERY (sc <* QUERY (pd <* USEDIN (SELF,
      'PLANT_SPATIAL_CONFIGURATION.PROPERTY_DEFINITION.DEFINITION') |
      pd.name = 'hvac service characteristics') |
      NOT (SIZEOF (QUERY (dsc <* QUERY (pdr <* USEDIN (sc,
      'PLANT_SPATIAL_CONFIGURATION.' +
      'PROPERTY_DEFINITION_REPRESENTATION.DEFINITION') |
      pdr.used_representation.name = 'design service characteristics') |
      SIZEOF (QUERY (it <* dsc.used_representation.items |
      (SIZEOF (TYPEOF (it) *
      ['PLANT_SPATIAL_CONFIGURATION.MEASURE_REPRESENTATION_ITEM',
      'PLANT_SPATIAL_CONFIGURATION.' +
      'THERMODYNAMIC_TEMPERATURE_MEASURE_WITH_UNIT']) = 2) AND
      (it.name = 'minimum temperature'))) <= 1)) = 1))) = 0));
WR11: ((NOT (SIZEOF (QUERY (pd <* USEDIN (SELF,
      'PLANT_SPATIAL_CONFIGURATION.PROPERTY_DEFINITION.DEFINITION') |
      pd.name = 'hvac service characteristics')) >= 1)) OR
      (SIZEOF (QUERY (sc <* QUERY (pd <* USEDIN (SELF,
      'PLANT_SPATIAL_CONFIGURATION.PROPERTY_DEFINITION.DEFINITION') |
      pd.name = 'hvac service characteristics') |
      NOT (SIZEOF (QUERY (dsc <* QUERY (pdr <* USEDIN (sc,
      'PLANT_SPATIAL_CONFIGURATION.' +
      'PROPERTY_DEFINITION_REPRESENTATION.DEFINITION') |
      pdr.used_representation.name = 'design service characteristics') |
      SIZEOF (QUERY (it <* dsc.used_representation.items |
      (SIZEOF (TYPEOF (it) *
      ['PLANT_SPATIAL_CONFIGURATION.MEASURE_REPRESENTATION_ITEM',
      'PLANT_SPATIAL_CONFIGURATION.' +
      'THERMODYNAMIC_TEMPERATURE_MEASURE_WITH_UNIT']) = 2) AND
```


© ISO 2001 – All rights reserved

```
       (it.name = 'maximum temperature'))) <= 1)) = 1))) = 0));
 WR12: (NOT (SELF\shape_aspect.of_shape\property_definition.
       definition\product_definition.
       frame_of_reference\application_context_element.name IN
       ['functional definition', 'functional occurrence'])) OR
       (SIZEOF (QUERY (pdr <* USEDIN (SELF, 'PLANT_SPATIAL_CONFIGURATION.' +
       'PROPERTY_DEFINITION_REPRESENTATION.DEFINITION') |
       'PLANT_SPATIAL_CONFIGURATION.SHAPE_REPRESENTATION' IN
       TYPEOF (pdr.used_representation))) = 0);
END_ENTITY;
(*
```

Formal propositions:

WR1: The **application_context_element** that applies to an **hvac_connector** (as its **product_-definition_context**) shall have the name ‘functional occurrence’.

WR2: If the **hvac_connector** has a **property_definition** with a name of ‘hvac service characteristics’, the **property_definition** shall have exactly one **representation** with the name of ‘design service characteristics’.

WR3: If the **hvac_connector** has a **property_definition** with a name of ‘hvac service characteristics’, the **property_definition** shall have exactly one **representation** with a name of ‘design service characteristics’ that has at least two **representation_item**s.

WR4: If the **hvac_connector** has a **property_definition** with a name of ‘hvac service characteristics’, the **property_definition** shall have exactly one **representation** with a name of ‘design service characteristics’ that has one or two **representation_item**s of type **measure_representation_item** with a name of ‘pressure’, ‘minimum pressure’, or ‘maximum pressure’.

WR5: If the **hvac_connector** has a **property_definition** with a name of ‘hvac service characteristics’, the **property_definition** shall have exactly one **representation** with a name of ‘design service characteristics’ that has at most one **representation_item** of type **measure_representation_item** with a name of ‘pressure’.

WR6: If the **hvac_connector** has a **property_definition** with a name of ‘hvac service characteristics’, the **property_definition** shall have exactly one **representation** with a name of ‘design service characteristics’ that has at most one **representation_item** of type **measure_representation_item** with a name of ‘minimum pressure’.

WR7: If the **hvac_connector** has a **property_definition** with a name of ‘hvac service characteristics’, the **property_definition** shall have exactly one **representation** with a name of ‘design service characteristics’ that has at most one **representation_item** of type **measure_representation_item** with a name of ‘maximum pressure’.

WR8: If the **hvac_connector** has a **property_definition** with a name of ‘hvac service characteristics’, the **property_definition** shall have exactly one **representation** with a name of ‘design service characteristics’ that has one or two **representation_item**s of type **measure_representation_item** and **thermodynamic_temperature_measure_with_unit** with a name of ‘temperature’, ‘minimum temperature’, or ‘maximum temperature’.

WR9: If the **hvac_connector** has a **property_definition** with a **name** of ‘hvac service characteristics’, the **property_definition** shall have exactly one **representation** with a **name** of ‘design service characteristics’ that has at most one **representation_item** of type **measure_representation_item** and **thermodynamic_temperature_measure_with_unit** with a **name** of ‘temperature’.

© ISO 2001 – All rights reserved

WR10: If the **hvac_connector** has a **property_definition** with a **name** of 'hvac service characteristics', the **property_definition** shall have exactly one **representation** with a **name** of 'design service characteristics' that has at most one **representation_item** of type **measure_representation_item** and **thermodynamic_temperature_measure_with_unit** with a **name** of 'minimum temperature'.

WR11: If the **hvac_connector** has a **property_definition** with a **name** of 'hvac service characteristics', the **property_definition** shall have exactly one **representation** with a **name** of 'design service characteristics' that has at most one **representation_item** of type **measure_representation_item** and **thermodynamic_temperature_measure_with_unit** with a **name** of 'maximum temperature'.

WR12: If an **hvac_connector** is a type offunctional connector it shall not have any **shape_-representation**.

Associated global rules:

The following global rules defined in this part of ISO 10303 apply to the **plant_item_connector** entity:

- **application_context_requires_ap_definition** (see 5.2.4.1);
- **dependent_instantiable_application_context** (see 5.2.4.9);
- **dependent_instantiable_product_definition_context** (see 5.2.4.11);
- **product_definition_context_name_constraint** (see 5.2.4.13);
- **product_definition_usage_constraint** (see 5.2.4.14).

5.2.3.1.46 hvac_cross_section

An **hvac_cross_section** is a type of **shape_aspect** that specifies the cross section of an HVAC connector.

EXPRESS specification:

```
*)
ENTITY hvac_cross_section
  SUBTYPE OF (shape_aspect);
END_ENTITY;
(*
```

5.2.3.1.47 hvac_fitting_class

An **hvac_fitting_class** is a type of **group** that classifies the items that are assigned to it as HVAC fittings.

EXPRESS specification:

```
*)
ENTITY hvac_fitting_class
  SUBTYPE OF (group);
WHERE
  WR1: SIZEOF (QUERY (aca <* QUERY (ca <* USEDIN (SELF,
       'PLANT_SPATIAL_CONFIGURATION.CLASSIFICATION_ASSIGNMENT.' +
       'ASSIGNED_CLASS') |
       'PLANT_SPATIAL_CONFIGURATION.APPLIED_CLASSIFICATION_ASSIGNMENT' IN
       TYPEOF (ca)) |
       NOT (SIZEOF (QUERY (it <* aca.items |
       NOT ('PLANT_SPATIAL_CONFIGURATION.HVAC_COMPONENT_DEFINITION' IN
       TYPEOF (it)))) = 0))) = 0;
```


© ISO 2001 – All rights reserved

```
  WR2: SIZEOF (QUERY (aca <* QUERY (ca <* USEDIN (SELF,
       'PLANT_SPATIAL_CONFIGURATION.CLASSIFICATION_ASSIGNMENT.' +
       'ASSIGNED_CLASS') |
       'PLANT_SPATIAL_CONFIGURATION.APPLIED_CLASSIFICATION_ASSIGNMENT' IN
       TYPEOF (ca)) |
       NOT (SIZEOF (QUERY (pcd <* QUERY (it <* aca.items |
       'PLANT_SPATIAL_CONFIGURATION.HVAC_COMPONENT_DEFINITION' IN
       TYPEOF (it)) |
       NOT (SIZEOF (QUERY (aca1 <* USEDIN (pcd.formation.of_product,
       'PLANT_SPATIAL_CONFIGURATION.' +
       'APPLIED_CLASSIFICATION_ASSIGNMENT.ITEMS') |
       class_in_tree (aca1.assigned_class, 'hvac fitting')))
       = 1))) = 0))) = 0;
END_ENTITY;
(*
```

Formal propositions:

WR1: An **hvac_fitting_class** shall classify items of type **hvac_component_definition**.

WR2: An **hvac_fitting_class** shall classify items of type **hvac_component_definition** that are a definition of a **product** that is categorized as a ‘hvac fitting’.

5.2.3.1.48 hvac_plant_item_branch_connection

An **hvac_plant_item_branch_connection** is a type of**shape_aspect_relationship** that identifies the connection between an HVAC section segment and an hvac connector that branches from the segment.

EXPRESS specification:

```
*)
ENTITY hvac_plant_item_branch_connection
  SUBTYPE OF (shape_aspect_relationship);
WHERE
  WR1: SELF.description = 'branch location';
  WR2: 'PLANT_SPATIAL_CONFIGURATION.HVAC_SECTION_SEGMENT_DEFINITION'
       IN TYPEOF (SELF.relating_shape_aspect.of_shape.definition);
  WR3: 'PLANT_SPATIAL_CONFIGURATION.HVAC_CONNECTOR'
       IN TYPEOF (SELF.related_shape_aspect);
END_ENTITY;
(*
```

Formal propositions:

WR1: The value of **hvac_plant_item_branch_connection.description** shall be ‘branch location’.

WR2: The **product_definition** that the **relating_shape_aspect** of an **hvac_plant_item_branch_-connection** is related to shall be an **hvac_section_segment_definition**.

WR3: The **related_shape_aspect** of an **hvac_branch_connection** shall be an **hvac_connector**.

5.2.3.1.49 hvac_plant_item_connection

An **hvac_plant_item_ connection** is a type of**shape_aspect_relationship** that identifies the connection between an HVAC plant item termination and an HVAC connector.

EXPRESS specification:

```
*)
ENTITY hvac_plant_item_connection
     SUBTYPE OF (shape_aspect_relationship);
```


© ISO 2001 – All rights reserved

```
WHERE
  WR1: 'PLANT_SPATIAL_CONFIGURATION.HVAC_SECTION_SEGMENT_TERMINATION'
       IN TYPEOF (SELF.relating_shape_aspect);
  WR2: 'PLANT_SPATIAL_CONFIGURATION.HVAC_CONNECTOR'
       IN TYPEOF (SELF.related_shape_aspect);
  WR3: SELF\shape_aspect_relationship.related_shape_aspect.
       of_shape\property_definition.
       definition\product_definition.
       frame_of_reference\application_context_element.
       name = 'physical occurrence';
END_ENTITY;
(*
```

Formal propositions:

WR1: The **relating_shape_aspect** of an **hvac_plant_item_connection** shall be an **hvac_section_-segment_termination**.

WR2: The **related_shape_aspect** of an **hvac_plant_item_connection** shall be an **hvac_connector**.

WR3: The **product_definition** that the **related_shape_aspect** of an **hvac_plant_item_connection** is related to shall have a context with the name ‘physical occurrence’.

5.2.3.1.50 hvac_section_segment_definition

An **hvac_section_segment_definition** is a type of **product_definition** that identifies an HVAC section segment.

EXPRESS specification:

```
*)
ENTITY hvac_section_segment_definition
  SUBTYPE OF (product_definition);
WHERE
  WR1: SIZEOF (QUERY (pdr <* USEDIN (SELF,
       'PLANT_SPATIAL_CONFIGURATION.' +
       'PRODUCT_DEFINITION_RELATIONSHIP.RELATED_PRODUCT_DEFINITION') |
       'PLANT_SPATIAL_CONFIGURATION.HVAC_SYSTEM_SECTION_DEFINITION'
       IN TYPEOF (pdr.relating_product_definition))) >= 1;
  WR2: SIZEOF (QUERY( pd <* USEDIN (SELF,
       'PLANT_SPATIAL_CONFIGURATION.PROPERTY_DEFINITION.DEFINITION') |
       'PLANT_SPATIAL_CONFIGURATION.SHAPE_DEFINITION' IN
       TYPEOF (pd))) >= 1;
  WR3: SELF.frame_of_reference\application_context_element.name =
       'functional definition';
  WR4: SIZEOF (QUERY (pdr <* USEDIN (SELF, 'PLANT_SPATIAL_CONFIGURATION.' +
       'PROPERTY_DEFINITION_REPRESENTATION.DEFINITION') |
       pdr.used_representation.name =
       'hvac section segment characteristics')) = 1;
  WR5: SIZEOF (QUERY (hssc <* QUERY (pdr <* USEDIN (SELF,
       'PLANT_SPATIAL_CONFIGURATION.' +
       'PROPERTY_DEFINITION_REPRESENTATION.DEFINITION') |
       pdr.used_representation.name =
       'hvac section segment characteristics') |
       NOT ({1 <= SIZEOF (QUERY (it <* hssc.used_representation.items |
       (it.name IN ['pressure drop',
       'maximum pressure drop', 'minimum pressure drop ']))) <= 2}))) = 0;
  WR6: SIZEOF (QUERY (hssc <* QUERY (pdr <* USEDIN (SELF,
       'PLANT_SPATIAL_CONFIGURATION.' +
       'PROPERTY_DEFINITION_REPRESENTATION.DEFINITION') |
       pdr.used_representation.name =
       'hvac section segment characteristics') |
       NOT (SIZEOF (QUERY (it <* hssc.used_representation.items |
       ('PLANT_SPATIAL_CONFIGURATION.MEASURE_REPRESENTATION_ITEM' IN
       TYPEOF (it)) AND
```


© ISO 2001 – All rights reserved

```
      (it.name = 'pressure drop'))) <= 1))) = 0;
 WR7: SIZEOF (QUERY (hssc <* QUERY (pdr <* USEDIN (SELF,
      'PLANT_SPATIAL_CONFIGURATION.' +
      'PROPERTY_DEFINITION_REPRESENTATION.DEFINITION') |
      pdr.used_representation.name =
      'hvac section segment characteristics') |
      NOT (SIZEOF (QUERY (it <* hssc.used_representation.items |
      ('PLANT_SPATIAL_CONFIGURATION.MEASURE_REPRESENTATION_ITEM' IN
      TYPEOF (it)) AND
      (it.name = 'minimum pressure drop'))) <= 1))) = 0;
 WR8: SIZEOF (QUERY (hssc <* QUERY (pdr <* USEDIN (SELF,
      'PLANT_SPATIAL_CONFIGURATION.' +
      'PROPERTY_DEFINITION_REPRESENTATION.DEFINITION') |
      pdr.used_representation.name =
      'hvac section segment characteristics') |
      NOT (SIZEOF (QUERY (it <* hssc.used_representation.items |
      ('PLANT_SPATIAL_CONFIGURATION.MEASURE_REPRESENTATION_ITEM' IN
      TYPEOF (it)) AND
      (it.name = 'maximum pressure drop'))) <= 1))) = 0;
 WR9: (NOT (SIZEOF (QUERY (pdr <* USEDIN (SELF,
      'PLANT_SPATIAL_CONFIGURATION.' +
      'PRODUCT_DEFINITION_RELATIONSHIP.RELATED_PRODUCT_DEFINITION') |
      pdr.name = 'hvac segment insulation')) >= 1)) OR
      (SIZEOF (QUERY (si <* QUERY (pdr <* USEDIN (SELF,
      'PLANT_SPATIAL_CONFIGURATION.' +
      'PRODUCT_DEFINITION_RELATIONSHIP.RELATED_PRODUCT_DEFINITION') |
      pdr.name = 'hvac segment insulation') |
      NOT (SIZEOF (QUERY (pd <* USEDIN (si,
      'PLANT_SPATIAL_CONFIGURATION.PROPERTY_DEFINITION.DEFINITION') |
      NOT (SIZEOF (QUERY (pds <* QUERY (pdr <* USEDIN (pd,
      'PLANT_SPATIAL_CONFIGURATION.' +
      'PROPERTY_DEFINITION_REPRESENTATION.DEFINITION') |
      'PLANT_SPATIAL_CONFIGURATION.PRODUCT_DEFINITION_SHAPE' IN
      TYPEOF (pdr)) |
      pds.used_representation.name =
      'hvac segment insulation characteristics')) = 1))) = 0))) = 0);
WR10: (NOT (SIZEOF (QUERY (pdr <* USEDIN (SELF,
      'PLANT_SPATIAL_CONFIGURATION.' +
      'PRODUCT_DEFINITION_RELATIONSHIP.RELATED_PRODUCT_DEFINITION') |
      pdr.name = 'hvac segment insulation')) >= 1)) OR
      (SIZEOF (QUERY (si <* QUERY (pdr <* USEDIN (SELF,
      'PLANT_SPATIAL_CONFIGURATION.' +
      'PRODUCT_DEFINITION_RELATIONSHIP.RELATED_PRODUCT_DEFINITION') |
      pdr.name = 'hvac segment insulation') |
      NOT (SIZEOF (QUERY (pd <* USEDIN (si,
      'PLANT_SPATIAL_CONFIGURATION.PROPERTY_DEFINITION.DEFINITION') |
      NOT (SIZEOF (QUERY (sic <* QUERY (pds <* QUERY (pdr <* USEDIN (pd,
      'PLANT_SPATIAL_CONFIGURATION.' +
      'PROPERTY_DEFINITION_REPRESENTATION.DEFINITION') |
      'PLANT_SPATIAL_CONFIGURATION.PRODUCT_DEFINITION_SHAPE' IN
      TYPEOF (pdr)) |
      pds.used_representation.name =
      'hvac segment insulation characteristics') |
      SIZEOF (sic.used_representation.items) >= 1)) = 1))) = 0))) = 0);
WR11: (NOT (SIZEOF (QUERY (pdr <* USEDIN (SELF,
      'PLANT_SPATIAL_CONFIGURATION.' +
      'PRODUCT_DEFINITION_RELATIONSHIP.RELATED_PRODUCT_DEFINITION') |
      pdr.name = 'hvac segment insulation')) >= 1)) OR
      (SIZEOF (QUERY (si <* QUERY (pdr <* USEDIN (SELF,
      'PLANT_SPATIAL_CONFIGURATION.' +
      'PRODUCT_DEFINITION_RELATIONSHIP.RELATED_PRODUCT_DEFINITION') |
      pdr.name = 'hvac segment insulation') |
      NOT (SIZEOF (QUERY (pd <* USEDIN (si,
      'PLANT_SPATIAL_CONFIGURATION.PROPERTY_DEFINITION.DEFINITION') |
      NOT (SIZEOF (QUERY (sic <* QUERY (pds <* QUERY (pdr <* USEDIN (pd,
      'PLANT_SPATIAL_CONFIGURATION.' +
      'PROPERTY_DEFINITION_REPRESENTATION.DEFINITION') |
      'PLANT_SPATIAL_CONFIGURATION.PRODUCT_DEFINITION_SHAPE' IN
      TYPEOF (pdr)) |
      pds.used_representation.name =
```


© ISO 2001 – All rights reserved

```
      'hvac segment insulation characteristics') |
      {1 <= SIZEOF (QUERY (it <* sic.used_representation.items |
      (SIZEOF (TYPEOF (it) *
      ['PLANT_SPATIAL_CONFIGURATION.MEASURE_REPRESENTATION_ITEM',
      'PLANT_SPATIAL_CONFIGURATION.LENGTH_MEASURE_WITH_UNIT']) = 2) AND
      (it.name IN ['thickness', 'minimum thickness',
      'maximum thickness'])))  <= 2})) = 1))) = 0))) = 0);
WR12: (NOT (SIZEOF (QUERY (pdr <* USEDIN (SELF,
      'PLANT_SPATIAL_CONFIGURATION.' +
      'PRODUCT_DEFINITION_RELATIONSHIP.RELATED_PRODUCT_DEFINITION') |
      pdr.name = 'hvac segment insulation')) >= 1)) OR
      (SIZEOF (QUERY (si <* QUERY (pdr <* USEDIN (SELF,
      'PLANT_SPATIAL_CONFIGURATION.' +
      'PRODUCT_DEFINITION_RELATIONSHIP.RELATED_PRODUCT_DEFINITION') |
      pdr.name = 'hvac segment insulation') |
      NOT (SIZEOF (QUERY (pd <* USEDIN (si,
      'PLANT_SPATIAL_CONFIGURATION.PROPERTY_DEFINITION.DEFINITION') |
      NOT (SIZEOF (QUERY (sic <* QUERY (pds <* QUERY (pdr <* USEDIN (pd,
      'PLANT_SPATIAL_CONFIGURATION.' +
      'PROPERTY_DEFINITION_REPRESENTATION.DEFINITION') |
      'PLANT_SPATIAL_CONFIGURATION.PRODUCT_DEFINITION_SHAPE' IN
      TYPEOF (pdr)) |
      pds.used_representation.name =
      'segment insulation characteristics') |
      SIZEOF (QUERY (it <* sic.used_representation.items |
      (SIZEOF (TYPEOF (it) *
      ['PLANT_SPATIAL_CONFIGURATION.MEASURE_REPRESENTATION_ITEM',
      'PLANT_SPATIAL_CONFIGURATION.LENGTH_MEASURE_WITH_UNIT']) = 2) AND
      (it.name = 'thickness'))) <= 1)) = 1))) = 0))) = 0);
WR13: (NOT (SIZEOF (QUERY (pdr <* USEDIN (SELF,
      'PLANT_SPATIAL_CONFIGURATION.' +
      'PRODUCT_DEFINITION_RELATIONSHIP.RELATED_PRODUCT_DEFINITION') |
      pdr.name = 'segment insulation')) >= 1)) OR
      (SIZEOF (QUERY (si <* QUERY (pdr <* USEDIN (SELF,
      'PLANT_SPATIAL_CONFIGURATION.' +
      'PRODUCT_DEFINITION_RELATIONSHIP.RELATED_PRODUCT_DEFINITION') |
      pdr.name = 'hvac segment insulation') |
      NOT (SIZEOF (QUERY (pd <* USEDIN (si,
      'PLANT_SPATIAL_CONFIGURATION.PROPERTY_DEFINITION.DEFINITION') |
      NOT (SIZEOF (QUERY (sic <* QUERY (pds <* QUERY (pdr <* USEDIN (pd,
      'PLANT_SPATIAL_CONFIGURATION.' +
      'PROPERTY_DEFINITION_REPRESENTATION.DEFINITION') |
      'PLANT_SPATIAL_CONFIGURATION.PRODUCT_DEFINITION_SHAPE' IN
      TYPEOF (pdr)) |
      pds.used_representation.name =
      'hvac segment insulation characteristics') |
      SIZEOF (QUERY (it <* sic.used_representation.items |
      (SIZEOF (TYPEOF (it) *
      ['PLANT_SPATIAL_CONFIGURATION.MEASURE_REPRESENTATION_ITEM',
      'PLANT_SPATIAL_CONFIGURATION.LENGTH_MEASURE_WITH_UNIT']) = 2) AND
      (it.name = 'minimum thickness'))) <= 1)) = 1))) = 0))) = 0);
WR14: (NOT (SIZEOF (QUERY (pdr <* USEDIN (SELF,
      'PLANT_SPATIAL_CONFIGURATION.' +
      'PRODUCT_DEFINITION_RELATIONSHIP.RELATED_PRODUCT_DEFINITION') |
      pdr.name = 'hvac segment insulation')) >= 1)) OR
      (SIZEOF (QUERY (si <* QUERY (pdr <* USEDIN (SELF,
      'PLANT_SPATIAL_CONFIGURATION.' +
      'PRODUCT_DEFINITION_RELATIONSHIP.RELATED_PRODUCT_DEFINITION') |
      pdr.name = 'hvac segment insulation') |
      NOT (SIZEOF (QUERY (pd <* USEDIN (si,
      'PLANT_SPATIAL_CONFIGURATION.PROPERTY_DEFINITION.DEFINITION') |
      NOT (SIZEOF (QUERY (sic <* QUERY (pds <* QUERY (pdr <* USEDIN (pd,
      'PLANT_SPATIAL_CONFIGURATION.' +
      'PROPERTY_DEFINITION_REPRESENTATION.DEFINITION') |
      'PLANT_SPATIAL_CONFIGURATION.PRODUCT_DEFINITION_SHAPE' IN
      TYPEOF (pdr)) |
      pds.used_representation.name =
      'hvac segment insulation characteristics') |
      SIZEOF (QUERY (it <* sic.used_representation.items |
      (SIZEOF (TYPEOF (it) *
```


© ISO 2001 – All rights reserved

```
       ['PLANT_SPATIAL_CONFIGURATION.MEASURE_REPRESENTATION_ITEM',
       'PLANT_SPATIAL_CONFIGURATION.LENGTH_MEASURE_WITH_UNIT']) = 2) AND
       (it.name = 'maximum thickness'))) <= 1)) = 1))) = 0))) = 0);
WR15: SIZEOF (QUERY (pds <* QUERY (pd <* USEDIN (SELF,
      'PLANT_SPATIAL_CONFIGURATION.PROPERTY_DEFINITION.DEFINITION') |
      'PLANT_SPATIAL_CONFIGURATION.PRODUCT_DEFINITION_SHAPE' IN
      TYPEOF (pd)) |
      NOT (SIZEOF (QUERY (sa <*USEDIN (pds,
      'PLANT_SPATIAL_CONFIGURATION.SHAPE_ASPECT.OF_SHAPE') |
      'PLANT_SPATIAL_CONFIGURATION.HVAC_SECTION_SEGMENT_TERMINATION' IN
      TYPEOF (sa))) = 2))) = 0;
END_ENTITY;
(*
```

Formal propositions:

WR1: An **hvac_sectionsegment_definition** shall be the **related_product_definition** in a **product_-definition_relationship** that has a **relating_product_definition** that is an **hvac_system_section_-definition**.

WR2: An **hvac_section_segment_definition** shall be referenced by a **shape_definition**.

WR3: An **hvac_section_segment_definition** shall have a **frame_of_reference name** of ‘functional definition’.

WR4: An **hvac_section_segment_definition** shall have exactly one representation with the name of ‘hvac section segment characteristics’.

WR5: The representation of the **hvac_section_segment_definition** with the name of ‘hvac section segment characteristics’ shall have between one and two **representation_item**s with a name of ‘pressure drop’, 'maximum pressure drop', or 'minimum pressure drop'.

WR6: The representation of the **hvac_section_segment_definition** with the name of ‘hvac section segment characteristics’ shall have at most one **representation_item** of type **measure_representation_-item** with a name of ‘pressure drop’.

WR7: The representation of the **hvac_section_segment_definition** with the name of ‘hvac section segment characteristics’ shall have at most one **representation_item** of type **measure_representation_-item** with a name of ‘minimum pressure drop’.

WR8: The representation of the **hvac_section_segment_definition** with the name of ‘hvac section segment characteristics’ shall have at most one **representation_item** of type **measure_representation_-item** with a name of ‘maximum pressure drop’.

WR9 If the **hvac_section_segment_definition** is related to a **product_definition** as an ‘hvac segment insulation’, the **product_definition** shall have a **product_definition_shape** that has exactly one **representation** with the **name** of ‘hvac segment insulation characteristics’.

WR10: If the **hvac_section_segment_definition** is related to a **product_definition** as an ‘hvac segment insulation’, the **product_definition** shall have a **product_definition_shape** that has exactly one **representation** with the **name** of ‘hvac segment insulation characteristics’ that has at least one **representation_item**.

WR11: If the **hvac_section_segment_definition** is related to a **product_definition** as an ‘hvac segment insulation’, the **product_definition** shall have a **product_definition_shape** that has exactly one **representation** with the **name** of ‘hvac segment insulation characteristics’ that has one or two **representation_item**s of type **measure_representation_item** and **length_measure_with_unit** with a

© ISO 2001 – All rights reserved

name of ‘thickness’, ‘minimum thickness’, or ‘maximum thickness’.

WR12: If the **hvac_section_segment_definition** is related to a **product_definition** as an ‘hvac segment insulation’, the **product_definition** shall have a **product_definition_shape** that has exactly one **representation** with the **name** of ‘hvac segment insulation characteristics’ that has at most one **representation_item** items of type **measure_representation_item** and **length_measure_with_unit** with a **name** of ‘thickness’.

WR13: If the **hvac_section_segment_definition** is related to a **product_definition** as an ‘hvac segment insulation’, the **product_definition** shall have a **product_definition_shape** that has exactly one **representation** with the **name** of ‘hvac segment insulation characteristics’ that has at most one **representation_item** items of type **measure_representation_item** and **length_measure_with_unit** with a **name** of ‘minimum thickness’.

WR14: If the **hvac_section_segment_definition** is related to a **product_definition** as an ‘hvac segment insulation’, the **product_definition** shall have a **product_definition_shape** that has exactly one **representation** with the **name** of ‘hvac segment insulation characteristics’ that has at most one **representation_item** items of type **measure_representation_item** and **length_measure_with_unit** with a **name** of ‘maximum thickness’.

WR15: The **hvac_section_segment_definition** shall be related to exactly two instances of **hvac_-section_segment_termination**.

Associated global rules:

The following global rules defined in this part of ISO 10303 apply to the **hvac_section_segment_-definition** entity:

- **application_context_requires_ap_definition** (see 5.2.4.1);
- **dependent_instantiable_application_context** (see 5.2.4.9);
- **dependent_instantiable_product_definition_context** (see 5.2.4.11);
- **product_definition_context_name_constraint** (see 5.2.4.13).

5.2.3.1.51 hvac_section_segment_termination

An **hvac_section_segment_termination** is a type of **shape_aspect** that identifies the termination of an HVAC section segment.

EXPRESS specification:

```
*)
ENTITY hvac_section_segment_termination
  SUBTYPE OF (shape_aspect);
WHERE
  WR1: SIZEOF (QUERY (sar <*
       USEDIN (SELF, 'PLANT_SPATIAL_CONFIGURATION.' +
       'SHAPE_ASPECT_RELATIONSHIP.RELATING_SHAPE_ASPECT') +
       USEDIN (SELF, 'PLANT_SPATIAL_CONFIGURATION.' +
       'SHAPE_ASPECT_RELATIONSHIP.RELATED_SHAPE_ASPECT') |
       NOT (SIZEOF (TYPEOF (sar) *
       ['PLANT_SPATIAL_CONFIGURATION.HVAC_BRANCH_CONNECTION',
       'PLANT_SPATIAL_CONFIGURATION.HVAC_PLANT_ITEM_CONNECTION',
       'PLANT_SPATIAL_CONFIGURATION.HVAC_TERMINATION_CONNECTION'])
       = 1))) = 0;
```


© ISO 2001 – All rights reserved

```
  WR2: SIZEOF (QUERY (sar <*
       USEDIN (SELF, 'PLANT_SPATIAL_CONFIGURATION.'+
       'SHAPE_ASPECT_RELATIONSHIP.RELATED_SHAPE_ASPECT') |
       SIZEOF (TYPEOF (sar) *
       ['PLANT_SPATIAL_CONFIGURATION.HVAC_BRANCH_CONNECTION',
       'PLANT_SPATIAL_CONFIGURATION.HVAC_PLANT_ITEM_CONNECTION']) = 1))= 1;
END_ENTITY;
(*
```

Formal propositions:

WR1: An **hvac_section_segment_termination** is the **relating_shape_aspect** or the **related_shape_-aspect** in at least one **shape_aspect_relationship** that is an **hvac_branch_connection**, **hvac_plant_-item_connection**, or **hvac_termination_connection**.

WR2: An **hvac_section_segment_termination** is the **related_shape_aspect** in exactly one **shape_-aspect_relationship** that is an **hvac_branch_connection** or an **hvac_plant_item_connection**.

Associated global rules:

The following global rules defined in this part of ISO 10303 apply to the **hvac_section_segment_-termination** entity:

- **application_context_requires_ap_definition** (see 5.2.4.1);
- **dependent_instantiable_application_context** (see 5.2.4.9);
- **dependent_instantiable_product_definition_context** (see 5.2.4.11);
- **product_definition_context_name_constraint** (see 5.2.4.13).

5.2.3.1.52 hvac_system

An **hvac_system** is a type of **product_definition** that identifies a system that is used for heating, ventilation, and air conditioning.

EXPRESS specification:

```
*)
ENTITY hvac_system
  SUBTYPE OF (product_definition);
WHERE
  WR1: SIZEOF (QUERY (pdr <* USEDIN (SELF, 'PLANT_SPATIAL_CONFIGURATION.' +
       'PRODUCT_DEFINITION_RELATIONSHIP.RELATED_PRODUCT_DEFINITION') |
       ('PLANT_SPATIAL_CONFIGURATION.PLANT' IN TYPEOF
       (pdr.relating_product_definition.formation.of_product)) AND
       (pdr.relating_product_definition.frame_of_reference.name =
       'functional occurrence'))) = 1;
END_ENTITY;
(*
```

Formal propositions:

WR1: The **hvac_system** shall be related to exactly one **product_definition** that is the definition of a plant and has a context of ‘functional occurrence’.

5.2.3.1.53 hvac_system_section_definition

© ISO 2001 – All rights reserved

An **hvac_system_section_definition** is a type of **product_definition** that identifies an HVAC system section.

EXPRESS specification:

```
*)
ENTITY hvac_system_section_definition
  SUBTYPE OF (product_definition);
WHERE
  WR1: SIZEOF (QUERY (pdr <* USEDIN (SELF, 'PLANT_SPATIAL_CONFIGURATION.' +
       'PRODUCT_DEFINITION_RELATIONSHIP.RELATED_PRODUCT_DEFINITION') |
       ('PLANT_SPATIAL_CONFIGURATION.HVAC_SYSTEM' IN
       TYPEOF (pdr.relating_product_definition)))) = 1;
  WR2: SIZEOF (QUERY (pdr <* USEDIN (SELF, 'PLANT_SPATIAL_CONFIGURATION.' +
       'PRODUCT_DEFINITION_RELATIONSHIP.RELATING_PRODUCT_DEFINITION') |
       'PLANT_SPATIAL_CONFIGURATION.HVAC_SECTION_SEGMENT_DEFINITION' IN
       TYPEOF (pdr.related_product_definition))) >= 1;
  WR3: SELF.frame_of_reference.name =
       'functional definition';
  WR4: SIZEOF (QUERY (pds <* QUERY (pd <* USEDIN (SELF,
      'PLANT_SPATIAL_CONFIGURATION.PROPERTY_DEFINITION.DEFINITION') |
      'PLANT_SPATIAL_CONFIGURATION.PRODUCT_DEFINITION_SHAPE' IN
      TYPEOF (pd)) |
      NOT (SIZEOF (QUERY (sa <*USEDIN (pds,
      'PLANT_SPATIAL_CONFIGURATION.SHAPE_ASPECT.OF_SHAPE') |
      ('PLANT_SPATIAL_CONFIGURATION.HVAC_SECTION_SEGMENT_TERMINATION' IN
      TYPEOF (sa)) AND
      (sa.description = 'hvac system section termination'))) <= 2))) = 0;
END_ENTITY;
(*
```

Formal propositions:

WR1: An **hvac_system_section_definition** shall be related to exactly one **hvac_system**.

WR2: An **hvac_system_section_definition** shall be related to at least one **hvac_section_segment_-definition**.

WR3: An **hvac_system_section_definition** shall have an **application_context_element.name** of ‘functional definition’.

WR4: An **hvac_system_section_definition** shall be have at most two related instances of **hvac_section_segment_termination** described as 'hvac system section termination'.

Associated global rules:

The following global rules defined in this part of ISO 10303 apply to the **hvac_system_section_-definition** entity:

- **application_context_requires_ap_definition** (see 5.2.4.1);
- **dependent_instantiable_application_context** (see 5.2.4.9);
- **dependent_instantiable_product_definition_context** (see 5.2.4.11);
- **product_definition_context_name_constraint** (see 5.2.4.13).

© ISO 2001 – All rights reserved

5.2.3.1.54 hvac_termination_connection

An **hvac_termination_connection** is a type of **shape_aspect_relationship** that identifies a connection between two HVAC section segment terminations.

EXPRESS specification:

```
*)
ENTITY hvac_termination_connection
  SUBTYPE OF (shape_aspect_relationship);
WHERE
  WR1: 'PLANT_SPATIAL_CONFIGURATION.HVAC_SECTION_SEGMENT_TERMINATION'
       IN TYPEOF (SELF.relating_shape_aspect);
  WR2: 'PLANT_SPATIAL_CONFIGURATION.HVAC_SECTION_SEGMENT_TERMINATION'
       IN TYPEOF (SELF.related_shape_aspect);
END_ENTITY;
(*
```

Formal propositions:

WR1: The **relating_shape_aspect** of an **hvac_termination_connection** shall be a an **hvac_section_-segment_termination**.

WR2: The **related_shape_aspect** of an **hvac_termination_connection** shall be a an **hvac_section_-segment_termination**.

5.2.3.1.55 hybrid_shape_representation

A **hybrid_shape_representation** is a type of **shape_representation** that is composed of CSG primitives, boolean operators, manifold solid boundary representation solids, shell based wireframe models, curves and surfaces.

EXPRESS specification:

```
*)
ENTITY hybrid_shape_representation
  SUBTYPE OF (shape_representation);
WHERE
  WR1: SIZEOF (QUERY (i <* SELF\representation.items |
       NOT (SIZEOF (['PLANT_SPATIAL_CONFIGURATION.BOOLEAN_RESULT',
       'PLANT_SPATIAL_CONFIGURATION.CSG_SOLID',
       'PLANT_SPATIAL_CONFIGURATION.RECTANGULAR_PYRAMID',
              'PLANT_SPATIAL_CONFIGURATION.BLOCK',
       'PLANT_SPATIAL_CONFIGURATION.TORUS',
       'PLANT_SPATIAL_CONFIGURATION.RIGHT_CIRCULAR_CYLINDER',
       'PLANT_SPATIAL_CONFIGURATION.SPHERE',
       'PLANT_SPATIAL_CONFIGURATION.RIGHT_CIRCULAR_CONE',
       'PLANT_SPATIAL_CONFIGURATION.EXTRUDED_AREA_SOLID',
       'PLANT_SPATIAL_CONFIGURATION.REVOLVED_AREA_SOLID',
       'PLANT_SPATIAL_CONFIGURATION.AXIS2_PLACEMENT_3D',
       'PLANT_SPATIAL_CONFIGURATION.MANIFOLD_SOLID_BREP',
       'PLANT_SPATIAL_CONFIGURATION.SHELL_BASED_WIREFRAME_MODEL',
       'PLANT_SPATIAL_CONFIGURATION.CURVE',
       'PLANT_SPATIAL_CONFIGURATION.POINT',
       'PLANT_SPATIAL_CONFIGURATION.SURFACE',
       'PLANT_SPATIAL_CONFIGURATION.VECTOR',
       'PLANT_SPATIAL_CONFIGURATION.MEASURE_REPRESENTATION_ITEM',
       'PLANT_SPATIAL_CONFIGURATION.MAPPED_ITEM'] *
       TYPEOF(i)) = 1))) = 0;
  WR2: SIZEOF (QUERY (mi <* QUERY (item <* SELF\representation.items |
       'PLANT_SPATIAL_CONFIGURATION.MAPPED_ITEM' IN TYPEOF(item)) |
       NOT (SIZEOF (['PLANT_SPATIAL_CONFIGURATION.' +
          'PLANT_CSG_SHAPE_REPRESENTATION',
```


© ISO 2001 – All rights reserved

```
       'PLANT_SPATIAL_CONFIGURATION.HYBRID_SHAPE_REPRESENTATION'] *
       TYPEOF(mi\mapped_item.mapping_source.mapped_representation))
       = 1))) = 0;
END_ENTITY;
(*
```

Formal propositions:

WR1: A **hybrid_shape_representation** shall contain **representation_item**s that are of type **boolean_-result**, **csg_solid**, **rectangular_pyramid**, **block**, **torus**, **right_circular_cylinder**, **sphere**, **right_-circular_cone**, **extruded_area_solid**, **revolved_area_solid**, **shell_based_wireframe_model**, **manifold_solid_brep**, **curve**, **point**, **surface**, **vector**, **axis2_placement_3d**, **measure_representation_-item**, or **mapped_item**.

WR2: If there is a **mapped_item** in a **hybrid_shape_representation**, the source of the **mapped_item** shall be a **plant_csg_shape_representation** or a **hybrid_shape_representation**.

Associated global rule:

The following global rule defined in this part of ISO 10303 applies to the **hybrid_shape_representation** entity:

- **subtype_mandatory_shape_representation** (see 5.2.4.18)

5.2.3.1.56 inline_equipment

An **inline_equipment** is a type of **piping_component_definition** that identifies an item that is inserted into the flow of a process stream.

EXPRESS specification:

```
*)
ENTITY inline_equipment
  SUBTYPE OF (piping_component_definition);
END_ENTITY;
(*
```

5.2.3.1.57 instrumentation_and_control_system

An **instrumentation_and_control_system** is a type of **product_definition** that identifies a system of wiring, switches, controls, and other equipment associated with monitoring and controlling performance characteristics.

EXPRESS specification:

```
*)
ENTITY instrumentation_and_control_system
  SUBTYPE OF (product_definition);
WHERE
  WR1: SIZEOF (QUERY (pdr <* USEDIN (SELF, 'PLANT_SPATIAL_CONFIGURATION.' +
       'PRODUCT_DEFINITION_RELATIONSHIP.RELATED_PRODUCT_DEFINITION') |
       ('PLANT_SPATIAL_CONFIGURATION.PLANT' IN TYPEOF
       (pdr.relating_product_definition.formation.of_product)) AND
       (pdr.relating_product_definition.frame_of_reference.name =
       'functional occurrence'))) = 1;
END_ENTITY;
(*
```


© ISO 2001 – All rights reserved

Formal propositions:

WR1: The **instrumentation_and_control_system** shall be related to exactly one **product_definition** that is the definition of a plant and has a context of 'functional occurrence'.

5.2.3.1.58 interfering_shape_element

An **interfering_shape_element** identifies a portion of the shape of an item that interferes with the shape of another item.

EXPRESS specification:

```
*)
ENTITY interfering_shape_element
  SUBTYPE OF (shape_aspect, shape_aspect_relationship);
END_ENTITY;
(*
```

5.2.3.1.59 known_source

A **known_source** is a type of **external_source** whose identification is standardized for all implementations of this part of ISO 10303. The purpose of the **known_source** entity data type is to identify particular sources of data that are used within the scope of this part of ISO 10303, and to associate specific data formats with such identification. The following known sources of data are identified in this part of ISO 10303:

- ISO 13584 Dictionaries, conforming to the requirements of ISO 13584-42. In this Part of ISO 10303, such Dictionaries are used to hold values of names for instances of **externally_defined_class**;

- ISO 13584 Parts Libraries, conforming to the requirements of ISO 13584-24. In this Part of ISO 10303, such Parts Libraries are used to hold collections of **catalogue_connector** and **externally_-defined_plant_item_definition**;

EXPRESS specification:

```
*)
ENTITY known_source
  SUBTYPE OF (external_source, pre_defined_item);
WHERE
  WR1: SELF\pre_defined_item.name IN
       ['ISO 13584 Dictionary','ISO 13584 Parts Library'];
END_ENTITY;
(*
```

Formal propositions:

WR1: The **name** of the **known_source** inherited from the **pre_defined_item** shall be 'ISO 13584 Dictionary', or 'ISO 13584 Parts Library'.

Attribute value definitions:

The **known_source** shall be used as follows, based on the standard values of the name attribute.

ISO 13584 Dictionary: the **known_source** shall be a dictionary as defined in ISO 13584-42. The string value given as the **item_id** of an **externally_defined_item** that references this **known_source** shall conform to the requirements for a Class_BSU as defined in ISO 13584-42.

© ISO 2001 – All rights reserved

ISO 13584 Parts Library: the **known_source** shall be a parts library as defined in ISO 13584-42. The string value given as the **item_id** of an **externally_defined_item** that references this **known_source** shall conform to the requirements for a BSU as defined in ISO 13584-42.

5.2.3.1.60 line_branch_connection

A **line_branch_connection** is a type of **shape_aspect_relationship** that identifies the connection between a line and a branch.

EXPRESS specification:

```
*)
ENTITY line_branch_connection
  SUBTYPE OF (shape_aspect_relationship);
WHERE
  WR1: SELF.description = 'branch location';
  WR2: 'PLANT_SPATIAL_CONFIGURATION.PLANT_LINE_SEGMENT_DEFINITION'
       IN TYPEOF (SELF.relating_shape_aspect.of_shape.definition);
  WR3: 'PLANT_SPATIAL_CONFIGURATION.PLANT_LINE_SEGMENT_TERMINATION'
       IN TYPEOF (SELF.related_shape_aspect);
END_ENTITY;
(*
```

Formal propositions:

WR1: The value of **line_branch_connection.description** shall be ‘branch location’.

WR2: The **product_definition** that the **relating_shape_aspect** of a **line_branch_connection** is related to shall be a **plant_line_segment_definition**.

WR3: The **related_shape_aspect** of a **line_branch_connection** shall be a **plant_line_segment_-termination**.

5.2.3.1.61 line_less_piping_system

A **line_less_piping_system** is a type of **product_definition** that identifies a piping system that is not part of a line.

EXPRESS specification:

```
*)
ENTITY line_less_piping_system
  SUBTYPE OF (product_definition);
END_ENTITY;
(*
```

5.2.3.1.62 line_plant_item_branch_connection

A **line_plant_item_branch_connection** is a type of**shape_aspect_relationship** that identifies the connection between a line and a plant item connector that branches from the line.

EXPRESS specification:

```
*)
ENTITY line_plant_item_branch_connection
  SUBTYPE OF (shape_aspect_relationship);
END_ENTITY;
(*
```


© ISO 2001 – All rights reserved

5.2.3.1.63 line_plant_item_connection

A **line_plant_item_ connection** is a type of**shape_aspect_relationship** that identifies the connection between a line segment and a plant item connector.

EXPRESS specification:

```
*)
ENTITY line_plant_item_connection
  SUBTYPE OF (shape_aspect_relationship);
WHERE
  WR1: 'PLANT_SPATIAL_CONFIGURATION.PLANT_LINE_SEGMENT_TERMINATION'
       IN TYPEOF (SELF.relating_shape_aspect);
  WR2: 'PLANT_SPATIAL_CONFIGURATION.PLANT_ITEM_CONNECTOR'
       IN TYPEOF (SELF.related_shape_aspect);
  WR3: SELF\shape_aspect_relationship.related_shape_aspect.
       of_shape\property_definition.
       definition\product_definition.
       frame_of_reference\application_context_element.
       name = 'physical occurrence';
END_ENTITY;
(*
```

Formal propositions:

WR1: The **relating_shape_aspect** of a **line_plant_item_connection** shall be a **plant_line_segment_-termination**.

WR2: The **related_shape_aspect** of a **line_plant_item_connection** shall be a **plant_item_connector**.

WR3: The **product_definition** that the **related_shape_aspect** of a **line_plant_item_connection** is related to shall have a context with the name ‘physical occurrence’.

5.2.3.1.64 line_termination_connection

A **line_termination_connection** is a type of **shape_aspect_relationship** that identifies a connection between two line segment terminations, or between a line segment termination and a connection node.

EXPRESS specification:

```
*)
ENTITY line_termination_connection
  SUBTYPE OF (shape_aspect_relationship);
WHERE
  WR1: SIZEOF (TYPEOF (SELF.relating_shape_aspect) *
       ['PLANT_SPATIAL_CONFIGURATION.CONNECTION_NODE',
       'PLANT_SPATIAL_CONFIGURATION.PLANT_LINE_SEGMENT_TERMINATION']
       ) >= 1;
  WR2: 'PLANT_SPATIAL_CONFIGURATION.PLANT_LINE_SEGMENT_TERMINATION'
       IN TYPEOF (SELF.related_shape_aspect);
END_ENTITY;
(*
```

Formal propositions:

WR1: The **relating_shape_aspect** of a **line_termination_connection** shall be a **connection_node** or a **plant_line_segment_termination**.

WR2: The **related_shape_aspect** of a **line_termination_connection** shall be a **plant_line_segment_-**

© ISO 2001 – All rights reserved

termination.

5.2.3.1.65 pipe_class

A **pipe_class** is a type of **group** that classifies the items that are assigned to it as pipes. The name of the **pipe_class** may further classify the assigned items.

EXPRESS specification:

```
*)
ENTITY pipe_class
  SUBTYPE OF (group);
WHERE
  WR1: SIZEOF (QUERY (aca <* QUERY (ca <* USEDIN (SELF,
       'PLANT_SPATIAL_CONFIGURATION.CLASSIFICATION_ASSIGNMENT.' +
       'ASSIGNED_CLASS') |
       'PLANT_SPATIAL_CONFIGURATION.APPLIED_CLASSIFICATION_ASSIGNMENT' IN
       TYPEOF (ca)) |
       NOT (SIZEOF (QUERY (it <* aca.items |
       NOT ('PLANT_SPATIAL_CONFIGURATION.PIPING_COMPONENT_DEFINITION' IN
       TYPEOF (it)))) = 0))) = 0;
  WR2: SIZEOF (QUERY (aca <* QUERY (ca <* USEDIN (SELF,
       'PLANT_SPATIAL_CONFIGURATION.CLASSIFICATION_ASSIGNMENT.' +
       'ASSIGNED_CLASS') |
       'PLANT_SPATIAL_CONFIGURATION.APPLIED_CLASSIFICATION_ASSIGNMENT' IN
       TYPEOF (ca)) |
       NOT (SIZEOF (QUERY (pcd <* QUERY (it <* aca.items |
       'PLANT_SPATIAL_CONFIGURATION.PIPING_COMPONENT_DEFINITION' IN
       TYPEOF (it)) |
       NOT (SIZEOF (QUERY (aca1 <* USEDIN (pcd.formation.of_product,
       'PLANT_SPATIAL_CONFIGURATION.' +
       'APPLIED_CLASSIFICATION_ASSIGNMENT.ITEMS') |
       class_in_tree (aca1.assigned_class, 'pipe'))) = 1))) = 0))) = 0;
END_ENTITY;
(*
```

Formal propositions:

WR1: A **pipe_class** shall classify items of type **piping_component_definition**.

WR2: A **pipe_class** shall classify items of type **piping_component_definition** that are a definition of a **product** that is categorized as a ‘pipe’.

5.2.3.1.66 pipe_closure_fitting_class

A **pipe_closure_fitting_class** is a type of **group** that classifies the items that are assigned to it as pipe closure fittings. The name of the **pipe_closure_fitting_class** may further classify the assigned items.

EXPRESS specification:

```
*)
ENTITY pipe_closure_fitting_class
  SUBTYPE OF (group);
WHERE
  WR1: SIZEOF (QUERY (aca <* QUERY (ca <* USEDIN (SELF,
       'PLANT_SPATIAL_CONFIGURATION.CLASSIFICATION_ASSIGNMENT.' +
       'ASSIGNED_CLASS') |
       'PLANT_SPATIAL_CONFIGURATION.APPLIED_CLASSIFICATION_ASSIGNMENT' IN
       TYPEOF (ca)) |
       NOT (SIZEOF (QUERY (it <* aca.items |
       NOT ('PLANT_SPATIAL_CONFIGURATION.PIPING_COMPONENT_DEFINITION' IN
       TYPEOF (it)))) = 0))) = 0;
```


© ISO 2001 – All rights reserved

```
  WR2: SIZEOF (QUERY (aca <* QUERY (ca <* USEDIN (SELF,
       'PLANT_SPATIAL_CONFIGURATION.CLASSIFICATION_ASSIGNMENT.' +
       'ASSIGNED_CLASS') |
       'PLANT_SPATIAL_CONFIGURATION.APPLIED_CLASSIFICATION_ASSIGNMENT' IN
       TYPEOF (ca)) |
       NOT (SIZEOF (QUERY (pcd <* QUERY (it <* aca.items |
       'PLANT_SPATIAL_CONFIGURATION.PIPING_COMPONENT_DEFINITION' IN
       TYPEOF (it)) |
       NOT (SIZEOF (QUERY (aca1 <* USEDIN (pcd.formation.of_product,
       'PLANT_SPATIAL_CONFIGURATION.' +
       'APPLIED_CLASSIFICATION_ASSIGNMENT.ITEMS') |
       class_in_tree (aca1.assigned_class, 'pipe closure')))
       = 1))) = 0))) = 0;
END_ENTITY;
(*
```

Formal propositions:

WR1: A **pipe_closure_fitting_class** shall classify items of type **piping_component_definition**.

WR2: A **pipe_closure_fitting_class** shall classify items of type **piping_component_definition** that are a definition of a **product** that is categorized as a ‘pipe closure’.

5.2.3.1.67 piping_component_class

A **piping_component_class** is a type of **group** that is a **characterized_object** representing a family of piping components defined by parameter range values.

EXPRESS specification:

```
*)
ENTITY piping_component_class
  SUBTYPE OF (group, characterized_object);
END_ENTITY;
(*
```

Associated global rule:

The following global rule defined in this part of ISO 10303 applies to the **piping_component_class** entity:

- **subtype_exclusive_characterized_object** (see 5.2.4.15)

5.2.3.1.68 piping_component_definition

A **piping_component_definition** is a type of **product_definition** that defines a piping component.

EXPRESS specification:

```
*)
ENTITY piping_component_definition
  SUBTYPE OF (product_definition);
END_ENTITY;
(*
```

5.2.3.1.69 piping_connector_class

A **piping_connector_class** is a type of **group** that classifies the items that are assigned to it as being

© ISO 2001 – All rights reserved

piping connectors.

EXPRESS specification:

```
*)
ENTITY piping_connector_class
  SUBTYPE OF (group);
END_ENTITY;
(*
```

5.2.3.1.70 piping_spool_definition

A **piping_spool_definition** is a type of **product_definition** that defines an assembly of **piping_-component**s and other **plant_item**s to be fabricated in a shop and physically connected into one item.

NOTE Only welded or screwed **piping_component**s are included in a spool piece

```
*)
ENTITY piping_spool_definition
  SUBTYPE OF (product_definition);
WHERE
  WR1: SIZEOF (USEDIN (SELF, 'PLANT_SPATIAL_CONFIGURATION.' +
       'PRODUCT_DEFINITION_RELATIONSHIP.RELATING_PRODUCT_DEFINITION')) > 1;
END_ENTITY;
(*
```

Formal propositions:

WR1: The **piping_spool_definition** shall relate more than **product_definition**.

5.2.3.1.71 piping_support_definition

A **piping_support_definition** is a type of **product_definition** that defines a piping support.

EXPRESS specification

```
*)
ENTITY piping_support_definition
  SUBTYPE OF (product_definition);
END_ENTITY;
(*
```

5.2.3.1.72 piping_support_fitting_class

A **piping_support_fitting_class** is a type of **group** that classifies the items that are assigned to it as piping support fittings. The name of the **piping_support_fitting_class** may further classify the assigned items.

EXPRESS specification:

```
*)
ENTITY piping_support_fitting_class
  SUBTYPE OF (group);
WHERE
  WR1: SIZEOF (QUERY (aca <* QUERY (ca <* USEDIN (SELF,
       'PLANT_SPATIAL_CONFIGURATION.CLASSIFICATION_ASSIGNMENT.' +
       'ASSIGNED_CLASS') |
       'PLANT_SPATIAL_CONFIGURATION.APPLIED_CLASSIFICATION_ASSIGNMENT' IN
       TYPEOF (ca)) |
       NOT (SIZEOF (QUERY (it <* aca.items |
```


© ISO 2001 – All rights reserved

```
       NOT ('PLANT_SPATIAL_CONFIGURATION.PIPING_SUPPORT_DEFINITION' IN
       TYPEOF (it)))) = 0))) = 0;
  WR2: SIZEOF (QUERY (aca <* QUERY (ca <* USEDIN (SELF,
       'PLANT_SPATIAL_CONFIGURATION.CLASSIFICATION_ASSIGNMENT.' +
       'ASSIGNED_CLASS') |
       'PLANT_SPATIAL_CONFIGURATION.APPLIED_CLASSIFICATION_ASSIGNMENT' IN
       TYPEOF (ca)) |
       NOT (SIZEOF (QUERY (pcd <* QUERY (it <* aca.items |
       'PLANT_SPATIAL_CONFIGURATION.PIPING_COMPONENT_DEFINITION' IN
       TYPEOF (it)) |
       NOT (SIZEOF (QUERY (aca1 <* USEDIN (pcd.formation.of_product,
       'PLANT_SPATIAL_CONFIGURATION.' +
       'APPLIED_CLASSIFICATION_ASSIGNMENT.ITEMS') |
       class_in_tree (aca1.assigned_class, 'piping support')))
       = 1))) = 0))) = 0;
END_ENTITY;
(*
```

Formal propositions:

WR1: A **piping_support_fitting_class** shall classify items of type **piping_component_definition**.

WR2: A **piping_support_fitting_class** shall classify items of type **piping_component_definition** that are a definition of a **product** that is categorized as a ‘piping support’.

5.2.3.1.73 piping_system

A **piping_system** is a type of **product_definition** that identifies a system of interconnected objects that convey fluid, vapour, or particulate flow.

EXPRESS specification:

```
*)
ENTITY piping_system
  SUBTYPE OF (product_definition);
WHERE
  WR1: SIZEOF (QUERY (pdr <* USEDIN (SELF, 'PLANT_SPATIAL_CONFIGURATION.' +
       'PRODUCT_DEFINITION_RELATIONSHIP.RELATED_PRODUCT_DEFINITION') |
       ('PLANT_SPATIAL_CONFIGURATION.PLANT' IN TYPEOF
       (pdr.relating_product_definition.formation.of_product)) AND
       (pdr.relating_product_definition.frame_of_reference.name =
       'functional occurrence'))) = 1;
END_ENTITY;
(*
```

Formal propositions:

WR1: The **piping_system** shall be related to exactly one **product_definition** that is the definition of a plant and has a context of ‘functional occurrence’.

5.2.3.1.74 plant

A **plant** is a type of **product** that identifies a process plant facility.

EXPRESS specification:

```
*)
ENTITY plant
  SUBTYPE OF (product);
WHERE
  WR1: SIZEOF (QUERY (pscoa <* USEDIN (SELF,
          'PLANT_SPATIAL_CONFIGURATION.' +
```


© ISO 2001 – All rights reserved

```
        'PLANT_SPATIAL_CONFIGURATION_ORGANIZATION_ASSIGNMENT.ITEMS')  |
        pscoa.role.name =
        'plant operator')) +
        SIZEOF (QUERY (pscpaoa <* USEDIN (SELF,
        'PLANT_SPATIAL_CONFIGURATION.' +
        'PLANT_SPATIAL_CONFIGURATION_PERSON_AND_ORGANIZATION_ASSIGNMENT.' +
        'ITEMS') |
        pscpaoa.role.name =
        'plant operator')) <= 1;
  WR2: SIZEOF (QUERY (pscoa <* USEDIN(SELF,
        'PLANT_SPATIAL_CONFIGURATION.' +
        'PLANT_SPATIAL_CONFIGURATION_ORGANIZATION_ASSIGNMENT.ITEMS') |
        pscoa.role.name = 'plant owner')) +
        SIZEOF (QUERY (pscpaoa <* USEDIN (SELF,
        'PLANT_SPATIAL_CONFIGURATION.' +
        'PLANT_SPATIAL_CONFIGURATION_PERSON_AND_ORGANIZATION_ASSIGNMENT.' +
        'ITEMS') |
        pscpaoa.role.name =
        'plant owner')) +
        SIZEOF (QUERY (pscpa <* USEDIN (SELF,
        'PLANT_SPATIAL_CONFIGURATION.' +
        'PLANT_SPATIAL_CONFIGURATION_PERSON_ASSIGNMENT.ITEMS') |
        pscpa.role.name = 'plant owner')) >= 1;
  WR3: SIZEOF (QUERY (pscoa <* USEDIN (SELF,
        'PLANT_SPATIAL_CONFIGURATION.' +
        'PLANT_SPATIAL_CONFIGURATION_ORGANIZATION_ASSIGNMENT.ITEMS')  |
        pscoa\organization_assignment.role.name =
        'plant project owner')) +
        SIZEOF (QUERY (pscpaoa <* USEDIN (SELF,
        'PLANT_SPATIAL_CONFIGURATION.' +
        'PLANT_SPATIAL_CONFIGURATION_PERSON_AND_ORGANIZATION_ASSIGNMENT.' +
        'ITEMS') |
        pscpaoa\person_and_organization_assignment.role.name =
        'plant project owner')) >= 1;
  WR4:  SIZEOF (QUERY (pdf <* USEDIN (SELF,
         'PLANT_SPATIAL_CONFIGURATION.' +
         'PRODUCT_DEFINITION_FORMATION.OF_PRODUCT') |
         NOT (SIZEOF (QUERY (pd <* USEDIN (pdf,
         'PLANT_SPATIAL_CONFIGURATION.PRODUCT_DEFINITION.FORMATION') |
         pd.frame_of_reference.name = 'functional occurrence')) <= 1))) = 0;
END_ENTITY;
(*
```

Formal propositions:

WR1: A **plant** is associated with zero or one **person_and_organization** or **organization** in the role of plant operator.

WR2: A **plant** is associated with at least one **organization**, **person_and_organization**, or **person** in the role of plant owner.

WR3: A **plant** is associated with at least one **person_and_organization** or **organization** in the role of plant project owner.

WR4: A **plant** shall be related to at most one **product_definition** that has a context of ‘functional occurrence’.

Informal proposition:

IP1: If the **plant** has shape, then the **shape_representation** depicting that shape shall have exactly one **axis2_placement_3d** instance in its items set with a name of ‘origin’.

Associated global rules:

© ISO 2001 – All rights reserved

The following global rules defined in this part of ISO 10303 apply to the **plant** entity:

- **application_context_requires_ap_definition** (see 5.2.4.1);
- **dependent_instantiable_application_context** (see 5.2.4.9);
- **dependent_instantiable_product_context** (see 5.2.4.10);
- **product_context_discipline_type_constraint** (see 5.2.4.12).

5.2.3.1.75 plant_csg_shape_representation

A **plant_csg_shape_representation** is a type of**shape_representation** that is composed of CSG primitives, revolved solids, extruded solids, and boolean operators.

EXPRESS specification:

```
*)
ENTITY plant_csg_shape_representation
  SUBTYPE OF (shape_representation);
WHERE
  WR1: SIZEOF (QUERY (item <* SELF.items |
       NOT (SIZEOF (['PLANT_SPATIAL_CONFIGURATION.CSG_SOLID',
       'PLANT_SPATIAL_CONFIGURATION.EXTRUDED_AREA_SOLID',
       'PLANT_SPATIAL_CONFIGURATION.REVOLVED_AREA_SOLID',
       'PLANT_SPATIAL_CONFIGURATION.AXIS2_PLACEMENT_3D',
       'PLANT_SPATIAL_CONFIGURATION.MAPPED_ITEM'] * TYPEOF (item)) = 1)))
       = 0;
  WR2: SIZEOF (QUERY (item <* SELF.items |
       SIZEOF (['PLANT_SPATIAL_CONFIGURATION.CSG_SOLID',
       'PLANT_SPATIAL_CONFIGURATION.EXTRUDED_AREA_SOLID',
       'PLANT_SPATIAL_CONFIGURATION.REVOLVED_AREA_SOLID',
       'PLANT_SPATIAL_CONFIGURATION.MAPPED_ITEM'] * TYPEOF (item))
       = 1)) >= 1;
  WR3: SIZEOF (QUERY (item <* SELF.items |
       ('PLANT_SPATIAL_CONFIGURATION.CSG_SOLID' IN TYPEOF (item)) AND
       (NOT (valid_advanced_csg_tree
               (item\csg_solid.tree_root_expression))))) = 0;
  WR4: SIZEOF (QUERY (mi <* QUERY (item <* SELF.items |
       'PLANT_SPATIAL_CONFIGURATION.MAPPED_ITEM' IN TYPEOF (item)) |
       NOT ('PLANT_SPATIAL_CONFIGURATION.' +
       'PLANT_CSG_SHAPE_REPRESENTATION' IN
       TYPEOF (mi\mapped_item.mapping_source.mapped_representation)))) = 0;
END_ENTITY;
(*
```

Formal propositions:

WR1: Each item of a **plant_csg_shape_representation** shall be a **csg_solid**, **extruded_area_solid**, **revolved_area_solid**, **axis2_placement_3d**, or **mapped_item**.

WR2: A **plant_csg_shape_representation** shall have at least one **representation_item** instance in its set of items that is of type **csg_solid**, **extruded_area_solid**, **revolved_area_solid**, or **mapped_item**.

WR3: A **plant_csg_shape_representation** shall be comprised of the proper CSG tree elements.

WR4: For each **mapped_item** in a **plant_csg_shape_representation**, the source of the **mapped_item** shall be a **plant_csg_shape_representation**.

© ISO 2001 – All rights reserved

Associated global rule:

The following global rule defined in this part of ISO 10303 applies to the **plant_csg_shape_-representation** entity:

- **subtype_mandatory_shape_representation** (see 5.2.4.18)

5.2.3.1.76 plant_design_csg_primitive

A **plant_design_csg_primitive** is a type of**solid_model** and a **shape_representation** which specifies a parameterised definition of a constructive solid geometry primitive that is specific to plant design.

NOTE The **plant_design_csg_primitive** is necessary in this part of ISO 10303 to facilitate the representation of CSG primitives specific to plant design CAD systems that were not acceptable as generic CSG primitives within ISO 10303-42.

A **plant_design_csg_primitive** represents one of the following types of CSG primitives specific to plant design:

- hemisphere;
- rectangle to ellipse;
- trimmed sphere;
- trimmed pyramid.

Each type of csg primitive has specific parameters defined for it. The parameters and their requirements are defined in the following clauses.

5.2.3.1.76.1 hemisphere

The hemisphere is a **plant_design_csg_primitive** with a name of ‘hemisphere’. It has two parameters: position and radius. The position is defined by an **axis2_placement_3d**. The location attribute of the position specifies the center of the circle formed by the center cut through the sphere upon which the hemisphere is based. The orientation consists of an x,y plane and a z direction. The xy plane specifies the plane in which the center cut circle is defined. The location point shall lie in the xy plane. The z axis direction specifies the direction from the center point which the volume occupies. The radius is defined by a **measure_representation_item** that is also a **length_measure_with_unit**. It specifies the radius of the sphere upon which the hemisphere is based.

5.2.3.1.76.2 rectangle to ellipse

The rectangle to ellipse is a **plant_design_csg_primitive** with a name of ‘rectangle to ellipse’. It has eight parameters: position, x size, y size, height, x offset, y offset, semi axis 1, and semi axis 2. The volume is defined by forming transition surfaces between the rectangle defined by x size and y size and the ellipse defined by the semi axis 1 and semi axis 2. The length of the transition is defined by the height. The rectangle to ellipse may be skewed if the x offset or y offset have non-zero values. The base of the volume is a rectangle with its center at the location point of the position. The size of the rectangle is defined by the parameters x size along the X axis and y size along the Y axis. The ellipse is in the plane perpendicular to the Z axis at distance height in the positive Z direction. The center of the ellipse is at x offset, y offset from the intersection point of the Z axis defined by the position and that plane.

The major axis of the ellipse is parallel to the X axis defined by the position, and the minor axis is

© ISO 2001 – All rights reserved

parallel to the Y axis defined by the position.

5.2.3.1.76.3 trimmed sphere

The trimmed sphere is a **plant_design_csg_primitive** with a name of ‘trimmed sphere’. It has two parameters: sphere, direction and height. The height varies from -radius to +radius. To place the cutting plane, locate a point along the vector defined by the direction with magnitude of the absolute value of the height coming out of center of the sphere. A cutting plane passes through this point and is perpendicular to the direction. A positive value for the height indicates a trim of the section above the cutting plane. A negative value for the height indicates a trim of the section below the cutting plane.

5.2.3.1.76.4 trimmed pyramid

The trimmed pyramid is a **plant_design_csg_primitive** with a name of ‘trimmed pyramid’. It defines a shape that is a rectangular pyramid that may be skewed. It has eight parameters that define a top and a bottom face, and a height: base position, base length, base width, height, top center x, top center y, top length and top width. The base position is and axis2_placement_3d. The base length an base width define the rectangle that comprises the base of the pyramid with the location point of the base position at the center of the rectangle. The height defines the distance along the z axis at which to place the plane in which the top face of the pyramid is defined. The top center x and top center y parameters define the distance from the point formed by the intersection of the top plane and the z axis of the position at which to place the center of the top face. The top length and top width define the boundaries of the top face of the pyramid.

EXPRESS specification:

```
*)
ENTITY plant_design_csg_primitive
  SUBTYPE OF (shape_representation, solid_model);
WHERE
  WR1: SELF.context_of_items.coordinate_space_dimension = 3;
  WR2: SELF\representation.name = SELF\representation_item.name;
  WR3: SELF\representation.name IN ['hemisphere', 'rectangle to ellipse',
       'trimmed sphere', 'trimmed pyramid'];
  WR4: (NOT (SELF\representation.name = 'hemisphere')) OR
       (SIZEOF (SELF.items) = 2);
  WR5: (NOT (SELF\representation.name = 'hemisphere')) OR
       (SIZEOF (QUERY (it <* SELF.items |
       (it.name = 'position') AND
       ('PLANT_SPATIAL_CONFIGURATION.AXIS2_PLACEMENT_3D' IN
       TYPEOF (it)))) = 1);
  WR6: (NOT (SELF\representation.name = 'hemisphere')) OR
       (SIZEOF (QUERY (it <* SELF.items |
       (it.name = 'radius') AND
       (SIZEOF (['PLANT_SPATIAL_CONFIGURATION.MEASURE_REPRESENTATION_ITEM',
       'PLANT_SPATIAL_CONFIGURATION.LENGTH_MEASURE_WITH_UNIT'] *
       TYPEOF (it)) = 2))) = 1);
  WR7: (NOT (SELF\representation.name = 'rectangle to ellipse')) OR
       (SIZEOF (SELF.items) = 8);
  WR8: (NOT (SELF\representation.name = 'rectangle to ellipse')) OR
       (SIZEOF (QUERY (it <* SELF.items |
       (it.name = 'position') AND
       ('PLANT_SPATIAL_CONFIGURATION.AXIS2_PLACEMENT_3D' IN
       TYPEOF (it)))) = 1);
  WR9: (NOT (SELF\representation.name = 'rectangle to ellipse')) OR
       (SIZEOF (QUERY (it <* SELF.items |
       (it.name = 'x size') AND
       (SIZEOF (['PLANT_SPATIAL_CONFIGURATION.MEASURE_REPRESENTATION_ITEM',
       'PLANT_SPATIAL_CONFIGURATION.LENGTH_MEASURE_WITH_UNIT'] *
       TYPEOF (it)) = 2) AND
       ('PLANT_SPATIAL_CONFIGURATION.POSITIVE_LENGTH_MEASURE' IN
       TYPEOF (it\measure_with_unit.value_component)))) = 1);
 WR10: (NOT (SELF\representation.name = 'rectangle to ellipse')) OR
```


© ISO 2001 – All rights reserved

```
      (SIZEOF (QUERY (it <* SELF.items |
      (it.name = 'y size') AND
      (SIZEOF (['PLANT_SPATIAL_CONFIGURATION.MEASURE_REPRESENTATION_ITEM',
      'PLANT_SPATIAL_CONFIGURATION.LENGTH_MEASURE_WITH_UNIT'] *
      TYPEOF (it)) = 2) AND
      ('PLANT_SPATIAL_CONFIGURATION.POSITIVE_LENGTH_MEASURE' IN
      TYPEOF (it\measure_with_unit.value_component)))) = 1);
WR11: (NOT (SELF\representation.name = 'rectangle to ellipse')) OR
      (SIZEOF (QUERY (it <* SELF.items |
      (it.name = 'height') AND
      (SIZEOF (['PLANT_SPATIAL_CONFIGURATION.MEASURE_REPRESENTATION_ITEM',
      'PLANT_SPATIAL_CONFIGURATION.LENGTH_MEASURE_WITH_UNIT'] *
      TYPEOF (it)) = 2) AND
      ('PLANT_SPATIAL_CONFIGURATION.POSITIVE_LENGTH_MEASURE' IN
      TYPEOF (it\measure_with_unit.value_component)))) = 1);
WR12: (NOT (SELF\representation.name = 'rectangle to ellipse')) OR
      (SIZEOF (QUERY (it <* SELF.items |
      (it.name = 'x offset') AND
      (SIZEOF (['PLANT_SPATIAL_CONFIGURATION.MEASURE_REPRESENTATION_ITEM',
      'PLANT_SPATIAL_CONFIGURATION.LENGTH_MEASURE_WITH_UNIT'] *
      TYPEOF (it)) = 2))) = 1);
WR13: (NOT (SELF\representation.name = 'rectangle to ellipse')) OR
      (SIZEOF (QUERY (it <* SELF.items |
      (it.name = 'y offset') AND
      (SIZEOF (['PLANT_SPATIAL_CONFIGURATION.MEASURE_REPRESENTATION_ITEM',
      'PLANT_SPATIAL_CONFIGURATION.LENGTH_MEASURE_WITH_UNIT'] *
      TYPEOF (it)) = 2))) = 1);
WR14: (NOT (SELF\representation.name = 'rectangle to ellipse')) OR
      (SIZEOF (QUERY (it <* SELF.items |
      (it.name = 'semi axis 1') AND
      (SIZEOF (['PLANT_SPATIAL_CONFIGURATION.MEASURE_REPRESENTATION_ITEM',
      'PLANT_SPATIAL_CONFIGURATION.LENGTH_MEASURE_WITH_UNIT'] *
      TYPEOF (it)) = 2))) = 1);
WR15: (NOT (SELF\representation.name = 'rectangle to ellipse')) OR
      (SIZEOF (QUERY (it <* SELF.items |
      (it.name = 'semi axis 2') AND
      (SIZEOF (['PLANT_SPATIAL_CONFIGURATION.MEASURE_REPRESENTATION_ITEM',
      'PLANT_SPATIAL_CONFIGURATION.LENGTH_MEASURE_WITH_UNIT'] *
      TYPEOF (it)) = 2))) = 1);
WR16: (NOT (SELF\representation.name = 'trimmed sphere')) OR
      (SIZEOF (SELF.items) = 3);
WR17: (NOT (SELF\representation.name = 'trimmed sphere')) OR
      (SIZEOF (QUERY (it <* SELF.items |
      (it.name = 'base sphere') AND
      ('PLANT_SPATIAL_CONFIGURATION.SPHERE' IN
      TYPEOF (it)))) = 1);
WR18: (NOT (SELF\representation.name = 'trimmed sphere')) OR
      (SIZEOF (QUERY (it <* SELF.items |
      (it.name = 'cutting plane normal direction') AND
      ('PLANT_SPATIAL_CONFIGURATION.DIRECTION' IN
      TYPEOF (it)))) = 1);
WR19: (NOT (SELF\representation.name = 'trimmed sphere')) OR
      (SIZEOF (QUERY (it <* SELF.items |
      (it.name = 'height') AND
      (SIZEOF (['PLANT_SPATIAL_CONFIGURATION.MEASURE_REPRESENTATION_ITEM',
      'PLANT_SPATIAL_CONFIGURATION.LENGTH_MEASURE_WITH_UNIT'] *
      TYPEOF (it)) = 2))) = 1);
WR20: (NOT (SELF\representation.name = 'trimmed sphere')) OR
      (SIZEOF (QUERY (ht <* QUERY (it <* SELF.items |
      (it.name = 'height') AND
      (SIZEOF (['PLANT_SPATIAL_CONFIGURATION.MEASURE_REPRESENTATION_ITEM',
      'PLANT_SPATIAL_CONFIGURATION.LENGTH_MEASURE_WITH_UNIT'] *
      TYPEOF (it)) = 2)) |
      NOT (SIZEOF (QUERY (sphre <* QUERY (it <* SELF.items |
      (it.name = 'base sphere') AND
      ('PLANT_SPATIAL_CONFIGURATION.SPHERE' IN TYPEOF (it))) |
      NOT ({-sphre.radius < ht.value_component < sphre.radius})))
      = 0))) = 0);
WR21: (NOT (SELF\representation.name = 'trimmed pyramid')) OR
      (SIZEOF (SELF.items) = 8);
```


© ISO 2001 – All rights reserved

```
 WR22: (NOT (SELF\representation.name = 'trimmed pyramid')) OR
       (SIZEOF (QUERY (it <* SELF.items |
       (it.name = 'base position') AND
       ('PLANT_SPATIAL_CONFIGURATION.AXIS2_PLACEMENT_3D' IN
       TYPEOF (it)))) = 1);
 WR23: (NOT (SELF\representation.name = 'trimmed pyramid')) OR
       (SIZEOF (QUERY (it <* SELF.items |
       (it.name = 'base length') AND
       (SIZEOF (['PLANT_SPATIAL_CONFIGURATION.MEASURE_REPRESENTATION_ITEM',
       'PLANT_SPATIAL_CONFIGURATION.LENGTH_MEASURE_WITH_UNIT'] *
       TYPEOF (it)) = 2))) = 1);
 WR24: (NOT (SELF\representation.name = 'trimmed pyramid')) OR
       (SIZEOF (QUERY (it <* SELF.items |
       (it.name = 'base width') AND
       (SIZEOF (['PLANT_SPATIAL_CONFIGURATION.MEASURE_REPRESENTATION_ITEM',
       'PLANT_SPATIAL_CONFIGURATION.LENGTH_MEASURE_WITH_UNIT'] *
       TYPEOF (it)) = 2))) = 1);
 WR25: (NOT (SELF\representation.name = 'trimmed pyramid')) OR
       (SIZEOF (QUERY (it <* SELF.items |
       (it.name = 'height') AND
       (SIZEOF (['PLANT_SPATIAL_CONFIGURATION.MEASURE_REPRESENTATION_ITEM',
       'PLANT_SPATIAL_CONFIGURATION.LENGTH_MEASURE_WITH_UNIT'] *
       TYPEOF (it)) = 2))) = 1);
 WR26: (NOT (SELF\representation.name = 'trimmed pyramid')) OR
       (SIZEOF (QUERY (it <* SELF.items |
       (it.name = 'top centre x') AND
       (SIZEOF (['PLANT_SPATIAL_CONFIGURATION.MEASURE_REPRESENTATION_ITEM',
       'PLANT_SPATIAL_CONFIGURATION.LENGTH_MEASURE_WITH_UNIT'] *
       TYPEOF (it)) = 2))) = 1);
 WR27: (NOT (SELF\representation.name = 'trimmed pyramid')) OR
       (SIZEOF (QUERY (it <* SELF.items |
       (it.name = 'top centre y') AND
       (SIZEOF (['PLANT_SPATIAL_CONFIGURATION.MEASURE_REPRESENTATION_ITEM',
       'PLANT_SPATIAL_CONFIGURATION.LENGTH_MEASURE_WITH_UNIT'] *
       TYPEOF (it)) = 2))) = 1);
 WR28: (NOT (SELF\representation.name = 'trimmed pyramid')) OR
       (SIZEOF (QUERY (it <* SELF.items |
       (it.name = 'top length') AND
       (SIZEOF (['PLANT_SPATIAL_CONFIGURATION.MEASURE_REPRESENTATION_ITEM',
       'PLANT_SPATIAL_CONFIGURATION.LENGTH_MEASURE_WITH_UNIT'] *
       TYPEOF (it)) = 2))) = 1);
 WR29: (NOT (SELF\representation.name = 'trimmed pyramid')) OR
       (SIZEOF (QUERY (it <* SELF.items |
       (it.name = 'top width') AND
       (SIZEOF (['PLANT_SPATIAL_CONFIGURATION.MEASURE_REPRESENTATION_ITEM',
       'PLANT_SPATIAL_CONFIGURATION.LENGTH_MEASURE_WITH_UNIT'] *
       TYPEOF (it)) = 2))) = 1);
END_ENTITY;
(*
```

Formal propositions:

WR1: The **plant_design_csg_primitive** shall be defined in three dimensions.

WR2: The **plant_design_csg_primitive** shall have a single name. The name attribute shall have the same value for the name attribute of the **representation** and **representation_item**.

WR3: The **plant_design_csg_primitive** shall have a name of either ‘hemisphere’, ‘rectangle to ellipse’, ‘trimmed sphere’, or ‘trimmed pyramid’.

WR4: If the name of the **plant_design_csg_primitive** is ‘hemisphere’, it shall be defined by exactly two representation_items.

WR5: If the name of the **plant_design_csg_primitive** is ‘hemisphere’, exactly one of the **representation_item**s in its definition shall be an **axis2_placement_3d** with a name of ‘position’.

© ISO 2001 – All rights reserved

WR6: If the name of the **plant_design_csg_primitive** is ‘hemisphere’, exactly one of the **representation_item**s in its definition shall be a **measure_representation_item** and **length_measure_-with_unit** with a name of ‘radius’.

WR7: If the name of the **plant_design_csg_primitive** is ‘rectangle to ellipse’, it shall be defined by exactly eight representation_items.

WR8: If the name of the **plant_design_csg_primitive** is ‘rectangle to ellipse’, exactly one of the **representation_item**s in its definition shall be an **axis2_placement_3d** with a name of ‘position’.

WR9: If the name of the **plant_design_csg_primitive** is ‘rectangle to ellipse’, exactly one of the **representation_item**s in its definition shall be a **measure_representation_item** and **length_measure_-with_unit** with a name of ‘x size’, the value of which is positive.

WR10: If the name of the **plant_design_csg_primitive** is ‘rectangle to ellipse’, exactly one of the **representation_item**s in its definition shall be a **measure_representation_item** and **length_measure_-with_unit** with a name of ‘y size’, the value of which is positive.

WR11: If the name of the **plant_design_csg_primitive** is ‘rectangle to ellipse’, exactly one of the **representation_item**s in its definition shall be a **measure_representation_item** and **length_measure_-with_unit** with a name of ‘height’, the value of which is positive.

WR12: If the name of the **plant_design_csg_primitive** is ‘rectangle to ellipse’, exactly one of the **representation_item**s in its definition shall be a **measure_representation_item** and **length_measure_-with_unit** with a name of ‘x offset’.

WR13: If the name of the **plant_design_csg_primitive** is ‘rectangle to ellipse’, exactly one of the **representation_item**s in its definition shall be a **measure_representation_item** and **length_measure_-with_unit** with a name of ‘y offset’.

WR14: If the name of the **plant_design_csg_primitive** is ‘rectangle to ellipse’, exactly one of the **representation_item**s in its definition shall be a **measure_representation_item** and **length_measure_-with_unit** with a name of ‘semi axis 1’.

WR15: If the name of the **plant_design_csg_primitive** is ‘rectangle to ellipse’, exactly one of the **representation_item**s in its definition shall be a **measure_representation_item** and **length_measure_-with_unit** with a name of ‘semi axis 2’.

WR16: If the name of the **plant_design_csg_primitive** is ‘trimmed sphere’, it shall be defined by exactly three **representation_item**s.

WR17: If the name of the **plant_design_csg_primitive** is ‘trimmed sphere’, exactly one of the **representation_item**s in its definition shall be a sphere with a name of ‘base sphere’.

WR18: If the name of the **plant_design_csg_primitive** is ‘trimmed sphere’, exactly one of the **representation_item**s in its definition shall be a direction with a name of ‘cutting plane normal direction’.

WR19: If the name of the **plant_design_csg_primitive** is ‘trimmed sphere’, exactly one of the **representation_item**s in its definition shall be a **measure_representation_item** and **length_measure_-with_unit** with a name of ‘radius’.

WR20: If the name of the **plant_design_csg_primitive** is ‘hemisphere’, the value of the height

© ISO 2001 – All rights reserved

parameter shall vary between negative radius and positive radius of the sphere.

WR21: If the name of the **plant_design_csg_primitive** is 'trimmed pyramid', it shall be defined by exactly two **representation_item**s.

WR22: If the name of the **plant_design_csg_primitive** is 'trimmed pyramid', exactly one of the **representation_item**s in its definition shall be an axis2_placement_3d with a name of 'base position'.

WR23: If the name of the **plant_design_csg_primitive** is 'trimmed pyramid', exactly one of the **representation_item**s in its definition shall be a **measure_representation_item** and **length_measure_-with_unit** with a name of 'base length'.

WR24: If the name of the **plant_design_csg_primitive** is 'trimmed pyramid', exactly one of the **representation_item**s in its definition shall be a **measure_representation_item** and **length_measure_-with_unit** with a name of 'base width'.

WR25: If the name of the **plant_design_csg_primitive** is 'trimmed pyramid', exactly one of the **representation_item**s in its definition shall be a **measure_representation_item** and **length_measure_-with_unit** with a name of 'height'.

WR26: If the name of the **plant_design_csg_primitive** is 'trimmed pyramid', exactly one of the **representation_item**s in its definition shall be a **measure_representation_item** and **length_measure_-with_unit** with a name of 'top centre x'.

WR27: If the name of the **plant_design_csg_primitive** is 'trimmed pyramid', exactly one of the **representation_item**s in its definition shall be a **measure_representation_item** and **length_measure_-with_unit** with a name of 'top centre y'.

WR28: If the name of the **plant_design_csg_primitive** is 'trimmed pyramid', exactly one of the **representation_item**s in its definition shall be a **measure_representation_item** and **length_measure_-with_unit** with a name of 'top length'.

WR29: If the name of the **plant_design_csg_primitive** is 'trimmed pyramid', exactly one of the **representation_item**s in its definition shall be a **measure_representation_item** and **length_measure_-with_unit** with a name of 'top width'.

Associated global rule:

The following global rule defined in this part of ISO 10303 applies to the **plant_design_csg_primitive** entity:

- **subtype_mandatory_shape_representation** (see 5.2.4.18)

5.2.3.1.77 plant_item_connection

A **plant_item_connection** is a type of **shape_aspect** and **shape_aspect_relationship** that identifies a connection between plant items.

NOTE A connection is a **shape_aspect** of the physical assembly where the two plant items are connected.

EXPRESS specification:

```
*)
ENTITY plant_item_connection
     SUBTYPE OF(shape_aspect, shape_aspect_relationship);
```


© ISO 2001 – All rights reserved

```
WHERE
  WR1: 'PLANT_SPATIAL_CONFIGURATION.PLANT_ITEM_CONNECTOR' IN
       TYPEOF (SELF\shape_aspect_relationship.relating_shape_aspect);
  WR2: 'PLANT_SPATIAL_CONFIGURATION.PLANT_ITEM_CONNECTOR' IN
       TYPEOF (SELF\shape_aspect_relationship.related_shape_aspect);
  WR3: SELF\shape_aspect.of_shape\property_definition.
       definition\product_definition.
       frame_of_reference\application_context_element.name IN
       ['functional occurrence', 'physical occurrence',
       'functional definition', 'physical definition'];
  WR4: (SELF\shape_aspect_relationship.relating_shape_aspect.
       of_shape\property_definition.definition\product_definition.
       frame_of_reference\application_context_element.name =
       SELF\shape_aspect_relationship.related_shape_aspect.
       of_shape\property_definition.definition\product_definition.
       frame_of_reference\application_context_element.name);
  WR5: SIZEOF (USEDIN (SELF, 'PLANT_SPATIAL_CONFIGURATION.' +
       'APPLIED_CLASSIFICATION_ASSIGNMENT.ITEMS')) >= 1;
  WR6: SIZEOF (QUERY (pscca <* USEDIN (SELF,
       'PLANT_SPATIAL_CONFIGURATION.' +
       'APPLIED_CLASSIFICATION_ASSIGNMENT.ITEMS') |
       NOT (SIZEOF (
       ['PLANT_SPATIAL_CONFIGURATION.CONNECTION_FUNCTIONAL_CLASS',
       'PLANT_SPATIAL_CONFIGURATION.CONNECTION_MOTION_CLASS'] *
       TYPEOF (pscca.assigned_class)) >= 1))) = 0;
  WR7: SIZEOF (QUERY (pdr <* USEDIN (SELF.of_shape.definition,
       'PLANT_SPATIAL_CONFIGURATION.PRODUCT_DEFINITION_RELATIONSHIP.' +
       'RELATED_PRODUCT_DEFINITION') |
       pdr.name = 'support usage connection')) <= 1;
END_ENTITY;
(*
```

Formal propositions:

WR1: The **relating_shape_aspect** of a **plant_item_connection** shall be a **plant_item_connector**.

WR2: The **related_shape_aspect** of a **plant_item_connection** shall be a **plant_item_connector**.

WR3: The **application_context_element** that applies to a **plant_item_connection** shall have the name ‘functional occurrence’, ‘physical occurrence’, ‘functional definition’, or ‘physical definition’.

WR4: The **application_context_element**s that apply to the **relating_shape_aspect** and the **related_-shape_aspect** of a **plant_item_connection** shall have the same name.

WR5: A **plant_item_connection** shall be classified at least once.

WR6: A **plant_item_connection** shall be classified as a **connection_functional_class**, as a **connection_-motion_class**, or as both.

WR7: The **product_definition** of the **plant_item_connection** shall be the **related_product_definition** in at most one **product_definition_relationship** with a name of ‘support usage connection’.

Associated global rules:

The following global rules defined in this part of ISO 10303 apply to the **plant_item_connection** entity:

- **application_context_requires_ap_definition** (see 5.2.4.1);
- **dependent_instantiable_application_context** (see 5.2.4.9);
- **dependent_instantiable_product_definition_context** (see 5.2.4.11);

© ISO 2001 – All rights reserved

- **product_definition_context_name_constraint** (see 5.2.4.13);
- **product_definition_usage_constraint** (see 5.2.4.14).

5.2.3.1.78 plant_item_connector

A **plant_item_connector** is a type of **shape_aspect** that identifies a feature of a plant item that is designed to connect to another connector.

EXPRESS specification:

```
*)
ENTITY plant_item_connector
  SUBTYPE OF(shape_aspect);
WHERE
  WR1: SELF\shape_aspect.of_shape\property_definition.
       definition\product_definition.
       frame_of_reference\application_context_element.name IN
       ['functional definition', 'physical definition',
       'functional occurrence', 'physical occurrence'];
  WR2: SIZEOF (QUERY (pic <*
       (bag_to_set (USEDIN (SELF,'PLANT_SPATIAL_CONFIGURATION.' +
       'SHAPE_ASPECT_RELATIONSHIP.RELATED_SHAPE_ASPECT')) +
       bag_to_set (USEDIN (SELF,'PLANT_SPATIAL_CONFIGURATION.' +
       'SHAPE_ASPECT_RELATIONSHIP.RELATING_SHAPE_ASPECT'))) |
       'PLANT_SPATIAL_CONFIGURATION.PLANT_ITEM_CONNECTION' IN
       TYPEOF (pic))) <= 1;
  WR3: (NOT (SIZEOF (QUERY (aca <* USEDIN (SELF,
       'PLANT_SPATIAL_CONFIGURATION.' +
       'APPLIED_CLASSIFICATION_ASSIGNMENT.ITEMS') |
       SIZEOF (TYPEOF (aca.assigned_class) *
       ['PLANT_SPATIAL_CONFIGURATION.PIPING_CONNECTOR_CLASS',
       'PLANT_SPATIAL_CONFIGURATION.CONNECTOR_END_TYPE_CLASS'])
       = 1)) >= 1)) OR
       ((NOT (SIZEOF (QUERY (pd <* USEDIN (SELF,
       'PLANT_SPATIAL_CONFIGURATION.PROPERTY_DEFINITION.DEFINITION') |
       pd.name = 'service characteristics')) >= 1)) OR
       (SIZEOF (QUERY (sc <* QUERY (pd <* USEDIN (SELF,
       'PLANT_SPATIAL_CONFIGURATION.PROPERTY_DEFINITION.DEFINITION') |
       pd.name = 'service characteristics') |
       NOT (SIZEOF (QUERY (pdr <* USEDIN (sc,
       'PLANT_SPATIAL_CONFIGURATION.' +
       'PROPERTY_DEFINITION_REPRESENTATION.DEFINITION') |
       pdr.used_representation.name =
       'design service characteristics')) = 1))) = 0));
  WR4: (NOT (SIZEOF (QUERY (aca <* USEDIN (SELF,
       'PLANT_SPATIAL_CONFIGURATION.' +
       'APPLIED_CLASSIFICATION_ASSIGNMENT.ITEMS') |
       SIZEOF (TYPEOF (aca.assigned_class) *
       ['PLANT_SPATIAL_CONFIGURATION.PIPING_CONNECTOR_CLASS',
       'PLANT_SPATIAL_CONFIGURATION.CONNECTOR_END_TYPE_CLASS'])
       = 1)) >= 1)) OR
       (NOT (SIZEOF (QUERY (pd <* USEDIN (SELF,
       'PLANT_SPATIAL_CONFIGURATION.PROPERTY_DEFINITION.DEFINITION') |
       (pd.name = 'service characteristics') )) >= 1)) OR
       (SIZEOF (QUERY (sc <* QUERY (pd <* USEDIN (SELF,
       'PLANT_SPATIAL_CONFIGURATION.PROPERTY_DEFINITION.DEFINITION') |
       pd.name = 'service characteristics') |
       NOT (SIZEOF (QUERY (dsc <* QUERY (pdr <* USEDIN (sc,
       'PLANT_SPATIAL_CONFIGURATION.' +
       'PROPERTY_DEFINITION_REPRESENTATION.DEFINITION') |
       pdr.used_representation.name = 'design service characteristics') |
       SIZEOF (dsc.used_representation.items) >= 2)) = 1))) = 0);
  WR5: (NOT (SIZEOF (QUERY (aca <* USEDIN (SELF,
       'PLANT_SPATIAL_CONFIGURATION.' +
       'APPLIED_CLASSIFICATION_ASSIGNMENT.ITEMS') |
          SIZEOF (TYPEOF (aca.assigned_class) *
```


© ISO 2001 – All rights reserved

```
     ['PLANT_SPATIAL_CONFIGURATION.PIPING_CONNECTOR_CLASS',
     'PLANT_SPATIAL_CONFIGURATION.CONNECTOR_END_TYPE_CLASS'])
     = 1)) >= 1)) OR
     ((NOT (SIZEOF (QUERY (pd <* USEDIN (SELF,
     'PLANT_SPATIAL_CONFIGURATION.PROPERTY_DEFINITION.DEFINITION') |
     pd.name = 'service characteristics')) >= 1)) OR
     (SIZEOF (QUERY (sc <* QUERY (pd <* USEDIN (SELF,
     'PLANT_SPATIAL_CONFIGURATION.PROPERTY_DEFINITION.DEFINITION') |
     pd.name = 'service characteristics') |
     NOT (SIZEOF (QUERY (dsc <* QUERY (pdr <* USEDIN (sc,
     'PLANT_SPATIAL_CONFIGURATION.' +
     'PROPERTY_DEFINITION_REPRESENTATION.DEFINITION') |
     pdr.used_representation.name = 'design service characteristics') |
     {1 <= SIZEOF (QUERY (it <* dsc.used_representation.items |
     ('PLANT_SPATIAL_CONFIGURATION.MEASURE_REPRESENTATION_ITEM' IN
     TYPEOF (it)) AND
     (it.name IN ['pressure', 'minimum pressure',
     'maximum pressure']))) <= 2})) = 1))) = 0));
WR6: (NOT (SIZEOF (QUERY (aca <* USEDIN (SELF,
     'PLANT_SPATIAL_CONFIGURATION.' +
     'APPLIED_CLASSIFICATION_ASSIGNMENT.ITEMS') |
     SIZEOF (TYPEOF (aca.assigned_class) *
     ['PLANT_SPATIAL_CONFIGURATION.PIPING_CONNECTOR_CLASS',
     'PLANT_SPATIAL_CONFIGURATION.CONNECTOR_END_TYPE_CLASS'])
     = 1)) >= 1)) OR
     ((NOT (SIZEOF (QUERY (pd <* USEDIN (SELF,
     'PLANT_SPATIAL_CONFIGURATION.PROPERTY_DEFINITION.DEFINITION') |
     pd.name = 'service characteristics')) >= 1)) OR
     (SIZEOF (QUERY (sc <* QUERY (pd <* USEDIN (SELF,
     'PLANT_SPATIAL_CONFIGURATION.PROPERTY_DEFINITION.DEFINITION') |
     pd.name = 'service characteristics') |
     NOT (SIZEOF (QUERY (dsc <* QUERY (pdr <* USEDIN (sc,
     'PLANT_SPATIAL_CONFIGURATION.' +
     'PROPERTY_DEFINITION_REPRESENTATION.DEFINITION') |
     pdr.used_representation.name = 'design service characteristics') |
     SIZEOF (QUERY (it <* dsc.used_representation.items |
     ('PLANT_SPATIAL_CONFIGURATION.MEASURE_REPRESENTATION_ITEM' IN
     TYPEOF (it)) AND
     (it.name = 'pressure'))) <= 1)) = 1))) = 0));
WR7: (NOT (SIZEOF (QUERY (aca <* USEDIN (SELF,
     'PLANT_SPATIAL_CONFIGURATION.' +
     'APPLIED_CLASSIFICATION_ASSIGNMENT.ITEMS') |
     SIZEOF (TYPEOF (aca.assigned_class) *
     ['PLANT_SPATIAL_CONFIGURATION.PIPING_CONNECTOR_CLASS',
     'PLANT_SPATIAL_CONFIGURATION.CONNECTOR_END_TYPE_CLASS'])
     = 1)) >= 1)) OR
     ((NOT (SIZEOF (QUERY (pd <* USEDIN (SELF,
     'PLANT_SPATIAL_CONFIGURATION.PROPERTY_DEFINITION.DEFINITION') |
     pd.name = 'service characteristics')) >= 1)) OR
     (SIZEOF (QUERY (sc <* QUERY (pd <* USEDIN (SELF,
     'PLANT_SPATIAL_CONFIGURATION.PROPERTY_DEFINITION.DEFINITION') |
     pd.name = 'service characteristics') |
     NOT (SIZEOF (QUERY (dsc <* QUERY (pdr <* USEDIN (sc,
     'PLANT_SPATIAL_CONFIGURATION.' +
     'PROPERTY_DEFINITION_REPRESENTATION.DEFINITION') |
     pdr.used_representation.name = 'design service characteristics') |
     SIZEOF (QUERY (it <* dsc.used_representation.items |
     ('PLANT_SPATIAL_CONFIGURATION.MEASURE_REPRESENTATION_ITEM' IN
     TYPEOF (it)) AND
     (it.name = 'minimum pressure'))) <= 1)) = 1))) = 0));
WR8: (NOT (SIZEOF (QUERY (aca <* USEDIN (SELF,
     'PLANT_SPATIAL_CONFIGURATION.' +
     'APPLIED_CLASSIFICATION_ASSIGNMENT.ITEMS') |
     SIZEOF (TYPEOF (aca.assigned_class) *
     ['PLANT_SPATIAL_CONFIGURATION.PIPING_CONNECTOR_CLASS',
     'PLANT_SPATIAL_CONFIGURATION.CONNECTOR_END_TYPE_CLASS'])
     = 1)) >= 1)) OR
     ((NOT (SIZEOF (QUERY (pd <* USEDIN (SELF,
     'PLANT_SPATIAL_CONFIGURATION.PROPERTY_DEFINITION.DEFINITION') |
     pd.name = 'service characteristics')) >= 1)) OR
```


© ISO 2001 – All rights reserved

```
       (SIZEOF (QUERY (sc <* QUERY (pd <* USEDIN (SELF,
       'PLANT_SPATIAL_CONFIGURATION.PROPERTY_DEFINITION.DEFINITION') |
       pd.name = 'service characteristics') |
       NOT (SIZEOF (QUERY (dsc <* QUERY (pdr <* USEDIN (sc,
       'PLANT_SPATIAL_CONFIGURATION.' +
       'PROPERTY_DEFINITION_REPRESENTATION.DEFINITION') |
       pdr.used_representation.name = 'design service characteristics') |
       SIZEOF (QUERY (it <* dsc.used_representation.items |
       ('PLANT_SPATIAL_CONFIGURATION.MEASURE_REPRESENTATION_ITEM' IN
       TYPEOF (it)) AND
       (it.name = 'maximum pressure'))) <= 1)) = 1))) = 0));
 WR9: (NOT (SIZEOF (QUERY (aca <* USEDIN (SELF,
       'PLANT_SPATIAL_CONFIGURATION.' +
       'APPLIED_CLASSIFICATION_ASSIGNMENT.ITEMS') |
       SIZEOF (TYPEOF (aca.assigned_class) *
       ['PLANT_SPATIAL_CONFIGURATION.PIPING_CONNECTOR_CLASS',
       'PLANT_SPATIAL_CONFIGURATION.CONNECTOR_END_TYPE_CLASS'])
       = 1)) >= 1)) OR
       ((NOT (SIZEOF (QUERY (pd <* USEDIN (SELF,
       'PLANT_SPATIAL_CONFIGURATION.PROPERTY_DEFINITION.DEFINITION') |
       pd.name = 'service characteristics')) >= 1)) OR
       (SIZEOF (QUERY (sc <* QUERY (pd <* USEDIN (SELF,
       'PLANT_SPATIAL_CONFIGURATION.PROPERTY_DEFINITION.DEFINITION') |
       pd.name = 'service characteristics') |
       NOT (SIZEOF (QUERY (dsc <* QUERY (pdr <* USEDIN (sc,
       'PLANT_SPATIAL_CONFIGURATION.' +
       'PROPERTY_DEFINITION_REPRESENTATION.DEFINITION') |
       pdr.used_representation.name = 'design service characteristics') |
       {1 <= SIZEOF (QUERY (it <* dsc.used_representation.items |
       (SIZEOF (TYPEOF (it) *
       ['PLANT_SPATIAL_CONFIGURATION.MEASURE_REPRESENTATION_ITEM',
       'PLANT_SPATIAL_CONFIGURATION.' +
       'THERMODYNAMIC_TEMPERATURE_MEASURE_WITH_UNIT']) = 2) AND
       (it.name IN ['temperature', 'minimum temperature',
       'maximum temperature'])))) <= 2})) = 1))) = 0));
WR10: (NOT (SIZEOF (QUERY (aca <* USEDIN (SELF,
       'PLANT_SPATIAL_CONFIGURATION.' +
       'APPLIED_CLASSIFICATION_ASSIGNMENT.ITEMS') |
       SIZEOF (TYPEOF (aca.assigned_class) *
       ['PLANT_SPATIAL_CONFIGURATION.PIPING_CONNECTOR_CLASS',
       'PLANT_SPATIAL_CONFIGURATION.CONNECTOR_END_TYPE_CLASS'])
       = 1)) >= 1)) OR
       ((NOT (SIZEOF (QUERY (pd <* USEDIN (SELF,
       'PLANT_SPATIAL_CONFIGURATION.PROPERTY_DEFINITION.DEFINITION') |
       pd.name = 'service characteristics')) >= 1)) OR
       (SIZEOF (QUERY (sc <* QUERY (pd <* USEDIN (SELF,
       'PLANT_SPATIAL_CONFIGURATION.PROPERTY_DEFINITION.DEFINITION') |
       pd.name = 'service characteristics') |
       NOT (SIZEOF (QUERY (dsc <* QUERY (pdr <* USEDIN (sc,
       'PLANT_SPATIAL_CONFIGURATION.' +
       'PROPERTY_DEFINITION_REPRESENTATION.DEFINITION') |
       pdr.used_representation.name = 'design service characteristics') |
       SIZEOF (QUERY (it <* dsc.used_representation.items |
       (SIZEOF (TYPEOF (it) *
       ['PLANT_SPATIAL_CONFIGURATION.MEASURE_REPRESENTATION_ITEM',
       'PLANT_SPATIAL_CONFIGURATION.' +
       'THERMODYNAMIC_TEMPERATURE_MEASURE_WITH_UNIT']) = 2) AND
       (it.name = 'temperature'))) <= 1)) = 1))) = 0));
WR11: (NOT (SIZEOF (QUERY (aca <* USEDIN (SELF,
       'PLANT_SPATIAL_CONFIGURATION.' +
       'APPLIED_CLASSIFICATION_ASSIGNMENT.ITEMS') |
       SIZEOF (TYPEOF (aca.assigned_class) *
       ['PLANT_SPATIAL_CONFIGURATION.PIPING_CONNECTOR_CLASS',
       'PLANT_SPATIAL_CONFIGURATION.CONNECTOR_END_TYPE_CLASS'])
       = 1)) >= 1)) OR
       ((NOT (SIZEOF (QUERY (pd <* USEDIN (SELF,
       'PLANT_SPATIAL_CONFIGURATION.PROPERTY_DEFINITION.DEFINITION') |
       pd.name = 'service characteristics')) >= 1)) OR
       (SIZEOF (QUERY (sc <* QUERY (pd <* USEDIN (SELF,
       'PLANT_SPATIAL_CONFIGURATION.PROPERTY_DEFINITION.DEFINITION') |
```


© ISO 2001 – All rights reserved

```
       pd.name = 'service characteristics') |
       NOT (SIZEOF (QUERY (dsc <* QUERY (pdr <* USEDIN (sc,
       'PLANT_SPATIAL_CONFIGURATION.' +
       'PROPERTY_DEFINITION_REPRESENTATION.DEFINITION') |
       pdr.used_representation.name = 'design service characteristics') |
       SIZEOF (QUERY (it <* dsc.used_representation.items |
       (SIZEOF (TYPEOF (it) *
       ['PLANT_SPATIAL_CONFIGURATION.MEASURE_REPRESENTATION_ITEM',
       'PLANT_SPATIAL_CONFIGURATION.' +
       'THERMODYNAMIC_TEMPERATURE_MEASURE_WITH_UNIT']) = 2) AND
       (it.name = 'minimum temperature'))) <= 1)) = 1))) = 0));
 WR12: (NOT (SIZEOF (QUERY (aca <* USEDIN (SELF,
       'PLANT_SPATIAL_CONFIGURATION.' +
       'APPLIED_CLASSIFICATION_ASSIGNMENT.ITEMS') |
       SIZEOF (TYPEOF (aca.assigned_class) *
       ['PLANT_SPATIAL_CONFIGURATION.PIPING_CONNECTOR_CLASS',
       'PLANT_SPATIAL_CONFIGURATION.CONNECTOR_END_TYPE_CLASS'])
       = 1)) >= 1)) OR
       ((NOT (SIZEOF (QUERY (pd <* USEDIN (SELF,
       'PLANT_SPATIAL_CONFIGURATION.PROPERTY_DEFINITION.DEFINITION') |
       pd.name = 'service characteristics')) >= 1)) OR
       (SIZEOF (QUERY (sc <* QUERY (pd <* USEDIN (SELF,
       'PLANT_SPATIAL_CONFIGURATION.PROPERTY_DEFINITION.DEFINITION') |
       pd.name = 'service characteristics') |
       NOT (SIZEOF (QUERY (dsc <* QUERY (pdr <* USEDIN (sc,
       'PLANT_SPATIAL_CONFIGURATION.' +
       'PROPERTY_DEFINITION_REPRESENTATION.DEFINITION') |
       pdr.used_representation.name = 'design service characteristics') |
       SIZEOF (QUERY (it <* dsc.used_representation.items |
       (SIZEOF (TYPEOF (it) *
       ['PLANT_SPATIAL_CONFIGURATION.MEASURE_REPRESENTATION_ITEM',
       'PLANT_SPATIAL_CONFIGURATION.' +
       'THERMODYNAMIC_TEMPERATURE_MEASURE_WITH_UNIT']) = 2) AND
       (it.name = 'maximum temperature'))) <= 1)) = 1))) = 0));
 WR13: (NOT (SELF\shape_aspect.of_shape\property_definition.
       definition\product_definition.
       frame_of_reference\application_context_element.name IN
       ['functional definition', 'functional occurrence'])) OR
       (SIZEOF (QUERY (pdr <* USEDIN (SELF, 'PLANT_SPATIAL_CONFIGURATION.' +
       'PROPERTY_DEFINITION_REPRESENTATION.DEFINITION') |
       'PLANT_SPATIAL_CONFIGURATION.SHAPE_REPRESENTATION' IN
       TYPEOF (pdr.used_representation))) = 0);
END_ENTITY;
(*
```

Formal propositions:

WR1: The **application_context_element** that applies to a **plant_item_connector** (as its **product_-definition_context**) shall have the name ‘functional definition’, ‘physical definition’ ‘functional occurrence’, or ‘physical occurrence’.

WR2: The **plant_item_connector** shall be the connector in at most one **plant_item_connection**.

WR3: If the **plant_item_connector** is classified as either a piping connector or a connector end type and has a **property_definition** with a name of ‘service characteristics’, the **property_definition** shall have exactly one **representation** with the name of ‘design service characteristics’.

WR4: If the **plant_item_connector** is classified as either a piping connector or a connector end type and has a **property_definition** with a name of ‘service characteristics’, the **property_definition** shall have exactly one **representation** with a name of ‘design service characteristics’ that has at least two **representation_item**s.

WR5: If the **plant_item_connector** is classified as either a piping connector or a connector end type and has a **property_definition** with a name of ‘service characteristics’, the **property_definition** shall have

© ISO 2001 – All rights reserved

exactly one **representation** with a name of ‘design service characteristics’ that has one or two **representation_item**s of type **measure_representation_item** with a name of ‘pressure’, ‘minimum pressure’, or ‘maximum pressure’.

WR6: If the **plant_item_connector** is classified as either a piping connector or a connector end type and has a **property_definition** with a name of ‘service characteristics’, the **property_definition** shall have exactly one **representation** with a name of ‘design service characteristics’ that has at most one **representation_item** of type measure_representation_item with a name of ‘pressure’.

WR7: If the **plant_item_connector** is classified as either a piping connector or a connector end type and has a **property_definition** with a name of ‘service characteristics’, the **property_definition** shall have exactly one **representation** with a name of ‘design service characteristics’ that has at most one **representation_item** of type **measure_representation_item** with a name of ‘minimum pressure’.

WR8: If the **plant_item_connector** is classified as either a piping connector or a connector end type and has a **property_definition** with a name of ‘service characteristics’, the **property_definition** shall have exactly one **representation** with a name of ‘design service characteristics’ that has at most one **representation_item** of type **measure_representation_item** with a name of ‘maximum pressure’.

WR9: If the **plant_item_connector** is classified as either a piping connector or a connector end type and has a **property_definition** with a name of ‘service characteristics’, the **property_definition** shall have exactly one **representation** with a name of ‘design service characteristics’ that has one or two **representation_item**s of type **measure_representation_item** and **thermodynamic_temperature_-measure_with_unit** with a name of ‘temperature’, ‘minimum temperature’, or ‘maximum temperature’.

WR10: If the **plant_item_connector** is classified as either a piping connector or a connector end type and has a **property_definition** with a **name** of ‘service characteristics’, the **property_definition** shall have exactly one **representation** with a **name** of ‘design service characteristics’ that has at most one **representation_item** of type **measure_representation_item** and **thermodynamic_temperature_-measure_with_unit** with a **name** of ‘temperature’.

WR11: If the **plant_item_connector** is classified as either a piping connector or a connector end type and has a **property_definition** with a **name** of ‘service characteristics’, the **property_definition** shall have exactly one **representation** with a **name** of ‘design service characteristics’ that has at most one **representation_item** of type **measure_representation_item** and **thermodynamic_temperature_-measure_with_unit** with a **name** of ‘minimum temperature’.

WR12: If the **plant_item_connector** is classified as either a piping connector or a connector end type and has a **property_definition** with a **name** of ‘service characteristics’, the **property_definition** shall have exactly one **representation** with a **name** of ‘design service characteristics’ that has at most one **representation_item** of type **measure_representation_item** and **thermodynamic_temperature_-measure_with_unit** with a **name** of ‘maximum temperature’.

WR13: If a **plant_item_connector** is a functional connector it shall not have any **shape_representation**.

Associated global rules:

The following global rules defined in this part of ISO 10303 apply to the **plant_item_connector** entity:

- **application_context_requires_ap_definition** (see 5.2.4.1);
- **dependent_instantiable_application_context** (see 5.2.4.9);

© ISO 2001 – All rights reserved

- **dependent_instantiable_product_definition_context** (see 5.2.4.11);
- **product_definition_context_name_constraint** (see 5.2.4.13);
- **product_definition_usage_constraint** (see 5.2.4.14).

5.2.3.1.79 plant_item_interference

A **plant_item_interference** is a type of **product_definition_relationship** that identifies interference between plant items.

EXPRESS specification:

```
*)
ENTITY plant_item_interference
  SUBTYPE OF (product_definition_relationship);
END_ENTITY;
(*
```

5.2.3.1.80 plant_item_route

A **plant_item_route** is a type of **product_definition_shape** that identifies the 3D path of a **plant_line_-definition** or a **plant_line_segment_definition**.

EXPRESS specification:

```
*)
ENTITY plant_item_route
  SUBTYPE OF (product_definition_shape);
WHERE
  WR1: SELF\property_definition.definition\product_definition.
       frame_of_reference\application_context_element.name =
       'physical occurrence';
  WR2: SIZEOF (TYPEOF (SELF\property_definition.definition) *
       ['PLANT_SPATIAL_CONFIGURATION.PLANT_LINE_DEFINITION',
       'PLANT_SPATIAL_CONFIGURATION.PLANT_LINE_SEGMENT_DEFINITION']) = 1;
END_ENTITY;
(*
```

Formal propositions:

WR1: The **name** of the **product_definition_context** that a **plant_item_route** is related to shall be ‘physical occurrence’.

WR2: A **plant_item_route** shall be the definition of the shape of a **plant_line_definition** or a **plant_-line_segment_definition**.

Associated global rules:

The following global rules defined in this part of ISO 10303 apply to the **plant_item_route** entity:

- **application_context_requires_ap_definition** (see 5.2.4.1);
- **dependent_instantiable_application_context** (see 5.2.4.9);
- **dependent_instantiable_product_definition_context** (see 5.2.4.11);

© ISO 2001 – All rights reserved

- **product_definition_context_name_constraint** (see 5.2.4.13);
- **product_definition_usage_constraint** (see 5.2.4.14).

5.2.3.1.81 plant_item_weight_representation

A **plant_item_weight_representation** is a type of **property_definition_representation** that specifies the weight of plant items.

EXPRESS specification:

```
*)
ENTITY plant_item_weight_representation
  SUBTYPE OF (property_definition_representation);
WHERE
  WR1: SELF.used_representation.name = 'item weight';
  WR2: SIZEOF (SELF.used_representation.items) >= 2;
  WR3: SIZEOF (QUERY (it <* SELF.used_representation.items |
       (it.name IN ['weight value',
       'maximum weight value', 'minimum weight value']) AND
       (NOT (SIZEOF (TYPEOF (it) *
       ['PLANT_SPATIAL_CONFIGURATION.MEASURE_REPRESENTATION_ITEM',
       'PLANT_SPATIAL_CONFIGURATION.QUALIFIED_REPRESENTATION_ITEM']) =
       2)))) = 0;
  WR4: SIZEOF (QUERY (it <* SELF.used_representation.items |
       ('PLANT_SPATIAL_CONFIGURATION.GEOMETRIC_REPRESENTATION_ITEM'
       IN TYPEOF (it)) AND
       (it.name = 'centre of gravity'))) = 1;
  WR5: {1 <= SIZEOF (QUERY (it <* SELF.used_representation.items |
       it.name IN ['weight value',
       'maximum weight value', 'minimum weight value'])) <= 2};
  WR6: SIZEOF (QUERY (it <* SELF\property_definition_representation.
       used_representation.items |
       (it.name IN ['maximum weight value', 'minimum weight value']) AND

       (NOT (SIZEOF (QUERY (tq <* QUERY (qual <*
       it\qualified_representation_item.qualifiers |
       'PLANT_SPATIAL_CONFIGURATION.TYPE_QUALIFIER' IN TYPEOF (qual)) |
       tq.name = 'operating')) = 1)))) = 0;
END_ENTITY;
(*
```

Formal propositions:

WR1: The name of the **plant_item_weight_representation** shall be ‘item weight’.

WR2: The **plant_item_weight_representation** shall contain at least two items.

WR3: If the **plant_item_weight_representation** contains a **representation_item** with a name of ‘weight value’, ‘maximum weight value’, or ‘minimum weight value’, the **representation_item** shall be a **measure_representation_item** and a **qualified_representation_item**.

WR4: The **plant_item_weight_representation** shall contain exactly one **representation_item** that is a **geometric_representation_item** with a name of ‘centre of gravity’.

WR5: The **plant_item_weight_representation** shall have between 1 and 2 **representation_items** with a **name** of ‘weight value’, ‘maximum weight value’, or ‘minimum weight value’.

WR6: If the **plant_item_weight_representation** has a **representation_item** with a **name** of ‘maximum weight value’ or ‘minimum weight value’, the **representation_item** shall have a **type_qualifier** with a

© ISO 2001 – All rights reserved

name of ‘operating’.

5.2.3.1.82 plant_line_definition

A **plant_line_definition** is a type of **product_definition_with_associated_documents** that identifies a piping system line.

EXPRESS specification:

```
*)
ENTITY plant_line_definition
  SUBTYPE OF (product_definition_with_associated_documents);
WHERE
  WR1: SIZEOF (QUERY (pdr <* USEDIN (SELF, 'PLANT_SPATIAL_CONFIGURATION.' +
       'PRODUCT_DEFINITION_RELATIONSHIP.RELATED_PRODUCT_DEFINITION') |
       ('PLANT_SPATIAL_CONFIGURATION.PIPING_SYSTEM' IN
       TYPEOF (pdr.relating_product_definition)))) = 1;
  WR2: SIZEOF (QUERY (pdr <* USEDIN (SELF, 'PLANT_SPATIAL_CONFIGURATION.' +
       'PRODUCT_DEFINITION_RELATIONSHIP.RELATING_PRODUCT_DEFINITION') |
       'PLANT_SPATIAL_CONFIGURATION.PLANT_LINE_SEGMENT_DEFINITION' IN
       TYPEOF (pdr.related_product_definition))) >= 1;
  WR3: (NOT (SIZEOF (QUERY (pd <* USEDIN (SELF,
       'PLANT_SPATIAL_CONFIGURATION.PROPERTY_DEFINITION.DEFINITION') |
       SIZEOF (USEDIN (pd, 'PLANT_SPATIAL_CONFIGURATION.' +
       'PROPERTY_DEFINITION_REPRESENTATION.DEFINITION')) >= 1)) = 0))  OR
       (SIZEOF (QUERY (pd <* USEDIN (SELF,
       'PLANT_SPATIAL_CONFIGURATION.PROPERTY_DEFINITION.DEFINITION') |
       NOT (SIZEOF (QUERY (pdr <* USEDIN (pd,
       'PLANT_SPATIAL_CONFIGURATION.' +
       'PROPERTY_DEFINITION_REPRESENTATION.DEFINITION') |
       SIZEOF (QUERY (rep <*
       USEDIN (pdr.used_representation.context_of_items,
       'PLANT_SPATIAL_CONFIGURATION.REPRESENTATION.CONTEXT_OF_ITEMS') |
       SIZEOF (QUERY (prop_def_rep <* USEDIN (rep,
       'PLANT_SPATIAL_CONFIGURATION.' +
       'PROPERTY_DEFINITION_REPRESENTATION.USED_REPRESENTATION') |
       (SIZEOF (['PLANT_SPATIAL_CONFIGURATION.SITE',
       'PLANT_SPATIAL_CONFIGURATION.SITE_BUILDING'] *
       TYPEOF (prop_def_rep.definition)) = 1) OR
       ('PLANT_SPATIAL_CONFIGURATION.PLANT' IN
       TYPEOF (prop_def_rep.definition.definition.formation.of_product))))
       >= 1)) >= 1)) >= 1))) = 0);
  WR4: SELF.frame_of_reference.name =
       'functional definition';
  WR5: SIZEOF (QUERY (pds <* QUERY (pd <* USEDIN (SELF,
      'PLANT_SPATIAL_CONFIGURATION.PROPERTY_DEFINITION.DEFINITION') |
      'PLANT_SPATIAL_CONFIGURATION.PRODUCT_DEFINITION_SHAPE' IN
      TYPEOF (pd)) |
      NOT (SIZEOF (QUERY (sa <*USEDIN (pds,
      'PLANT_SPATIAL_CONFIGURATION.SHAPE_ASPECT.OF_SHAPE') |
      ('PLANT_SPATIAL_CONFIGURATION.PLANT_LINE_SEGMENT_TERMINATION' IN
      TYPEOF (sa)) AND
      (sa.description = 'piping line termination'))) <= 2))) = 0;
END_ENTITY;
(*
```

Formal propositions:

WR1: A **plant_line_definition** shall be related to exactly one **piping_system**.

WR2: A **plant_line_definition** shall be related to at least one **plant_line_segment_definition**.

WR3: If a **plant_line_definition** has a representation, that representation shall be in the context of a **site_building**, a **site**, or a **plant**.

© ISO 2001 – All rights reserved

WR4: A **plant_line_definition** shall have an **application_context_element.name** of ‘functional definition’.

Associated global rules:

The following global rules defined in this part of ISO 10303 apply to the **plant_line_definition** entity:

- **application_context_requires_ap_definition** (see 5.2.4.1);
- **dependent_instantiable_application_context** (see 5.2.4.9);
- **dependent_instantiable_product_definition_context** (see 5.2.4.11);
- **product_definition_context_name_constraint** (see 5.2.4.13).

5.2.3.1.83 plant_line_segment_definition

A **plant_line_segment_definition** is a type of **product_definition** that identifies a line segment.

EXPRESS specification:

```
*)
ENTITY plant_line_segment_definition
  SUBTYPE OF (product_definition);
WHERE
  WR1: SIZEOF (QUERY (pdr <* USEDIN (SELF,
       'PLANT_SPATIAL_CONFIGURATION.' +
       'PRODUCT_DEFINITION_RELATIONSHIP.RELATED_PRODUCT_DEFINITION') |
       'PLANT_SPATIAL_CONFIGURATION.PLANT_LINE_DEFINITION'
       IN TYPEOF (pdr.relating_product_definition))) >= 1;
  WR2: SIZEOF (QUERY( pd <* USEDIN (SELF,
       'PLANT_SPATIAL_CONFIGURATION.PROPERTY_DEFINITION.DEFINITION') |
       'PLANT_SPATIAL_CONFIGURATION.SHAPE_DEFINITION' IN
       TYPEOF (pd))) >= 1;
  WR3: SELF.frame_of_reference\application_context_element.name =
       'functional definition';
  WR4: SIZEOF (QUERY (pdr <* USEDIN (SELF, 'PLANT_SPATIAL_CONFIGURATION.' +
       'PROPERTY_DEFINITION_REPRESENTATION.DEFINITION') |
       pdr.used_representation.name = 'line segment characteristics')) = 1;
  WR5: SIZEOF (QUERY (lsc <* QUERY (pdr <* USEDIN (SELF,
       'PLANT_SPATIAL_CONFIGURATION.' +
       'PROPERTY_DEFINITION_REPRESENTATION.DEFINITION') |
       pdr.used_representation.name = 'line segment characteristics') |
       NOT (SIZEOF (lsc.used_representation.items) >= 2))) = 0;
  WR6: SIZEOF (QUERY (lsc <* QUERY (pdr <* USEDIN (SELF,
       'PLANT_SPATIAL_CONFIGURATION.' +
       'PROPERTY_DEFINITION_REPRESENTATION.DEFINITION') |
       pdr.used_representation.name = 'line segment characteristics') |
       NOT (SIZEOF (QUERY (it <* lsc.used_representation.items |
       ('PLANT_SPATIAL_CONFIGURATION.MEASURE_REPRESENTATION_ITEM' IN
       TYPEOF (it)) AND
       (it.name = 'design pressure'))) = 1))) = 0;
  WR7: SIZEOF (QUERY (lsc <* QUERY (pdr <* USEDIN (SELF,
       'PLANT_SPATIAL_CONFIGURATION.' +
       'PROPERTY_DEFINITION_REPRESENTATION.DEFINITION') |
       pdr.used_representation.name = 'line segment characteristics') |
       NOT (SIZEOF (QUERY (it <* lsc.used_representation.items |
       (SIZEOF (TYPEOF (it) *
       ['PLANT_SPATIAL_CONFIGURATION.MEASURE_REPRESENTATION_ITEM',
       'PLANT_SPATIAL_CONFIGURATION.' +
       'THERMODYNAMIC_TEMPERATURE_MEASURE_WITH_UNIT']) = 2) AND
       (it.name = 'design temperature'))) = 1))) = 0;
  WR8: SIZEOF (QUERY (lsc <* QUERY (pdr <* USEDIN (SELF,
          'PLANT_SPATIAL_CONFIGURATION.' +
```


© ISO 2001 – All rights reserved

```
       'PROPERTY_DEFINITION_REPRESENTATION.DEFINITION') |
       pdr.used_representation.name = 'line segment characteristics') |
       NOT (SIZEOF (QUERY (it <* lsc.used_representation.items |
       (SIZEOF (TYPEOF (it) *
       ['PLANT_SPATIAL_CONFIGURATION.MEASURE_REPRESENTATION_ITEM',
       'PLANT_SPATIAL_CONFIGURATION.LENGTH_MEASURE_WITH_UNIT']) = 2) AND
       (it.name = 'elevation'))) <= 1))) = 0;
 WR9: SIZEOF (QUERY (lsc <* QUERY (pdr <* USEDIN (SELF,
       'PLANT_SPATIAL_CONFIGURATION.' +
       'PROPERTY_DEFINITION_REPRESENTATION.DEFINITION') |
       pdr.used_representation.name = 'line segment characteristics') |
       NOT (SIZEOF (QUERY (it <* lsc.used_representation.items |
       ('PLANT_SPATIAL_CONFIGURATION.MEASURE_REPRESENTATION_ITEM' IN
       TYPEOF (it)) AND
       (it.name = 'corrosion allowance'))) <= 1))) = 0;
WR10: (NOT (SIZEOF (QUERY (pdr <* USEDIN (SELF,
       'PLANT_SPATIAL_CONFIGURATION.' +
       'PRODUCT_DEFINITION_RELATIONSHIP.RELATED_PRODUCT_DEFINITION') |
       pdr.name = 'segment insulation')) >= 1)) OR
       (SIZEOF (QUERY (si <* QUERY (pdr <* USEDIN (SELF,
       'PLANT_SPATIAL_CONFIGURATION.' +
       'PRODUCT_DEFINITION_RELATIONSHIP.RELATED_PRODUCT_DEFINITION') |
       pdr.name = 'segment insulation') |
       NOT (SIZEOF (QUERY (pd <* USEDIN (si,
       'PLANT_SPATIAL_CONFIGURATION.PROPERTY_DEFINITION.DEFINITION') |
       NOT (SIZEOF (QUERY (pds <* QUERY (pdr <* USEDIN (pd,
       'PLANT_SPATIAL_CONFIGURATION.' +
       'PROPERTY_DEFINITION_REPRESENTATION.DEFINITION') |
       'PLANT_SPATIAL_CONFIGURATION.PRODUCT_DEFINITION_SHAPE' IN
       TYPEOF (pdr)) |
       pds.used_representation.name =
       'segment insulation characteristics')) = 1))) = 0))) = 0);
WR11: (NOT (SIZEOF (QUERY (pdr <* USEDIN (SELF,
       'PLANT_SPATIAL_CONFIGURATION.' +
       'PRODUCT_DEFINITION_RELATIONSHIP.RELATED_PRODUCT_DEFINITION') |
       pdr.name = 'segment insulation')) >= 1)) OR
       (SIZEOF (QUERY (si <* QUERY (pdr <* USEDIN (SELF,
       'PLANT_SPATIAL_CONFIGURATION.' +
       'PRODUCT_DEFINITION_RELATIONSHIP.RELATED_PRODUCT_DEFINITION') |
       pdr.name = 'segment insulation') |
       NOT (SIZEOF (QUERY (pd <* USEDIN (si,
       'PLANT_SPATIAL_CONFIGURATION.PROPERTY_DEFINITION.DEFINITION') |
       NOT (SIZEOF (QUERY (sic <* QUERY (pds <* QUERY (pdr <* USEDIN (pd,
       'PLANT_SPATIAL_CONFIGURATION.' +
       'PROPERTY_DEFINITION_REPRESENTATION.DEFINITION') |
       'PLANT_SPATIAL_CONFIGURATION.PRODUCT_DEFINITION_SHAPE' IN
       TYPEOF (pdr)) |
       pds.used_representation.name =
       'segment insulation characteristics') |
       SIZEOF (sic.used_representation.items) >= 1)) = 1))) = 0))) = 0);
WR12: (NOT (SIZEOF (QUERY (pdr <* USEDIN (SELF,
       'PLANT_SPATIAL_CONFIGURATION.' +
       'PRODUCT_DEFINITION_RELATIONSHIP.RELATED_PRODUCT_DEFINITION') |
       pdr.name = 'segment insulation')) >= 1)) OR
       (SIZEOF (QUERY (si <* QUERY (pdr <* USEDIN (SELF,
       'PLANT_SPATIAL_CONFIGURATION.' +
       'PRODUCT_DEFINITION_RELATIONSHIP.RELATED_PRODUCT_DEFINITION') |
       pdr.name = 'segment insulation') |
       NOT (SIZEOF (QUERY (pd <* USEDIN (si,
       'PLANT_SPATIAL_CONFIGURATION.PROPERTY_DEFINITION.DEFINITION') |
       NOT (SIZEOF (QUERY (sic <* QUERY (pds <* QUERY (pdr <* USEDIN (pd,
       'PLANT_SPATIAL_CONFIGURATION.' +
       'PROPERTY_DEFINITION_REPRESENTATION.DEFINITION') |
       'PLANT_SPATIAL_CONFIGURATION.PRODUCT_DEFINITION_SHAPE' IN
       TYPEOF (pdr)) |
       pds.used_representation.name =
       'segment insulation characteristics') |
       {1 <= SIZEOF (QUERY (it <* sic.used_representation.items |
       (SIZEOF (TYPEOF (it) *
       ['PLANT_SPATIAL_CONFIGURATION.MEASURE_REPRESENTATION_ITEM',
```


© ISO 2001 – All rights reserved

```
      'PLANT_SPATIAL_CONFIGURATION.LENGTH_MEASURE_WITH_UNIT']) = 2) AND
      (it.name IN ['thickness', 'minimum thickness',
      'maximum thickness']))) <= 2})) = 1))) = 0))) = 0);
WR13: (NOT (SIZEOF (QUERY (pdr <* USEDIN (SELF,
      'PLANT_SPATIAL_CONFIGURATION.' +
      'PRODUCT_DEFINITION_RELATIONSHIP.RELATED_PRODUCT_DEFINITION') |
      pdr.name = 'segment insulation')) >= 1)) OR
      (SIZEOF (QUERY (si <* QUERY (pdr <* USEDIN (SELF,
      'PLANT_SPATIAL_CONFIGURATION.' +
      'PRODUCT_DEFINITION_RELATIONSHIP.RELATED_PRODUCT_DEFINITION') |
      pdr.name = 'segment insulation') |
      NOT (SIZEOF (QUERY (pd <* USEDIN (si,
      'PLANT_SPATIAL_CONFIGURATION.PROPERTY_DEFINITION.DEFINITION') |
      NOT (SIZEOF (QUERY (sic <* QUERY (pds <* QUERY (pdr <* USEDIN (pd,
      'PLANT_SPATIAL_CONFIGURATION.' +
      'PROPERTY_DEFINITION_REPRESENTATION.DEFINITION') |
      'PLANT_SPATIAL_CONFIGURATION.PRODUCT_DEFINITION_SHAPE' IN
      TYPEOF (pdr)) |
      pds.used_representation.name =
      'segment insulation characteristics') |
      SIZEOF (QUERY (it <* sic.used_representation.items |
      (SIZEOF (TYPEOF (it) *
      ['PLANT_SPATIAL_CONFIGURATION.MEASURE_REPRESENTATION_ITEM',
      'PLANT_SPATIAL_CONFIGURATION.LENGTH_MEASURE_WITH_UNIT']) = 2) AND
      (it.name = 'thickness'))) <= 1)) = 1))) = 0))) = 0);
WR14: (NOT (SIZEOF (QUERY (pdr <* USEDIN (SELF,
      'PLANT_SPATIAL_CONFIGURATION.' +
      'PRODUCT_DEFINITION_RELATIONSHIP.RELATED_PRODUCT_DEFINITION') |
      pdr.name = 'segment insulation')) >= 1)) OR
      (SIZEOF (QUERY (si <* QUERY (pdr <* USEDIN (SELF,
      'PLANT_SPATIAL_CONFIGURATION.' +
      'PRODUCT_DEFINITION_RELATIONSHIP.RELATED_PRODUCT_DEFINITION') |
      pdr.name = 'segment insulation') |
      NOT (SIZEOF (QUERY (pd <* USEDIN (si,
      'PLANT_SPATIAL_CONFIGURATION.PROPERTY_DEFINITION.DEFINITION') |
      NOT (SIZEOF (QUERY (sic <* QUERY (pds <* QUERY (pdr <* USEDIN (pd,
      'PLANT_SPATIAL_CONFIGURATION.' +
      'PROPERTY_DEFINITION_REPRESENTATION.DEFINITION') |
      'PLANT_SPATIAL_CONFIGURATION.PRODUCT_DEFINITION_SHAPE' IN
      TYPEOF (pdr)) |
      pds.used_representation.name =
      'segment insulation characteristics') |
      SIZEOF (QUERY (it <* sic.used_representation.items |
      (SIZEOF (TYPEOF (it) *
      ['PLANT_SPATIAL_CONFIGURATION.MEASURE_REPRESENTATION_ITEM',
      'PLANT_SPATIAL_CONFIGURATION.LENGTH_MEASURE_WITH_UNIT']) = 2) AND
      (it.name = 'minimum thickness'))) <= 1)) = 1))) = 0))) = 0);
WR15: (NOT (SIZEOF (QUERY (pdr <* USEDIN (SELF,
      'PLANT_SPATIAL_CONFIGURATION.' +
      'PRODUCT_DEFINITION_RELATIONSHIP.RELATED_PRODUCT_DEFINITION') |
      pdr.name = 'segment insulation')) >= 1)) OR
      (SIZEOF (QUERY (si <* QUERY (pdr <* USEDIN (SELF,
      'PLANT_SPATIAL_CONFIGURATION.' +
      'PRODUCT_DEFINITION_RELATIONSHIP.RELATED_PRODUCT_DEFINITION') |
      pdr.name = 'segment insulation') |
      NOT (SIZEOF (QUERY (pd <* USEDIN (si,
      'PLANT_SPATIAL_CONFIGURATION.PROPERTY_DEFINITION.DEFINITION') |
      NOT (SIZEOF (QUERY (sic <* QUERY (pds <* QUERY (pdr <* USEDIN (pd,
      'PLANT_SPATIAL_CONFIGURATION.' +
      'PROPERTY_DEFINITION_REPRESENTATION.DEFINITION') |
      'PLANT_SPATIAL_CONFIGURATION.PRODUCT_DEFINITION_SHAPE' IN
      TYPEOF (pdr)) |
      pds.used_representation.name =
      'segment insulation characteristics') |
      SIZEOF (QUERY (it <* sic.used_representation.items |
      (SIZEOF (TYPEOF (it) *
      ['PLANT_SPATIAL_CONFIGURATION.MEASURE_REPRESENTATION_ITEM',
      'PLANT_SPATIAL_CONFIGURATION.LENGTH_MEASURE_WITH_UNIT']) = 2) AND
      (it.name = 'maximum thickness'))) <= 1)) = 1))) = 0))) = 0);
WR16: (NOT (SIZEOF (QUERY (pdr <* USEDIN (SELF,
```


© ISO 2001 – All rights reserved

```
        'PLANT_SPATIAL_CONFIGURATION.' +
        'PRODUCT_DEFINITION_RELATIONSHIP.RELATED_PRODUCT_DEFINITION') |
        pdr.name = 'segment insulation')) >= 1)) OR
        (SIZEOF (QUERY (si <* QUERY (pdr <* USEDIN (SELF,
        'PLANT_SPATIAL_CONFIGURATION.' +
        'PRODUCT_DEFINITION_RELATIONSHIP.RELATED_PRODUCT_DEFINITION') |
        pdr.name = 'segment insulation') |
        NOT (SIZEOF (QUERY (pd <* USEDIN (si,
        'PLANT_SPATIAL_CONFIGURATION.PROPERTY_DEFINITION.DEFINITION') |
        NOT (SIZEOF (QUERY (sic <* QUERY (pds <* QUERY (pdr <* USEDIN (pd,
        'PLANT_SPATIAL_CONFIGURATION.' +
        'PROPERTY_DEFINITION_REPRESENTATION.DEFINITION') |
        'PLANT_SPATIAL_CONFIGURATION.PRODUCT_DEFINITION_SHAPE' IN
        TYPEOF (pdr)) |
        pds.used_representation.name =
        'segment insulation characteristics') |
        SIZEOF (QUERY (it <* sic.used_representation.items |
        ('PLANT_SPATIAL_CONFIGURATION.DESCRIPTIVE_REPRESENTATION_ITEM' IN
        TYPEOF (it)) AND
        (it.name = 'boundaries'))) <= 1)) = 1))) = 0))) = 0);
WR17: SIZEOF (QUERY (pds <* QUERY (pd <* USEDIN (SELF,
      'PLANT_SPATIAL_CONFIGURATION.PROPERTY_DEFINITION.DEFINITION') |
      'PLANT_SPATIAL_CONFIGURATION.PRODUCT_DEFINITION_SHAPE' IN
      TYPEOF (pd)) |
      NOT (SIZEOF (QUERY (sa <*USEDIN (pds,
      'PLANT_SPATIAL_CONFIGURATION.SHAPE_ASPECT.OF_SHAPE') |
      'PLANT_SPATIAL_CONFIGURATION.PLANT_LINE_SEGMENT_TERMINATION' IN
      TYPEOF (sa))) = 2))) = 0;
END_ENTITY;
(*
```

Formal propositions:

WR1: A **plant_line_segment_definition** shall be the **related_product_definition** in a **product_-definition_relationship** that has a **relating_product_definition** that is a **plant_line_definition**.

WR2: A **plant_line_segment_definition** shall be referenced by a **shape_definition**.

WR3: A **plant_line_segment_definition** shall have a **frame_of_reference name** of ‘functional definition’.

WR4: A **plant_line_segment_definition** shall have exactly one representation with the name of ‘line segment characteristics’.

WR5: The representation of the **plant_line_segment_definition** with the name of ‘line segment characteristics’ shall have at least two **representation_item**s.

WR6: The representation of the **plant_line_segment_definition** with the name of ‘line segment characteristics’ shall have exactly one **representation_item** that is of type **measure_representation_-item** with a name of ‘design pressure’.

WR7: The representation of the **plant_line_segment_definition** with the name of ‘line segment characteristics’ shall have exactly one **representation_item** that is of type **measure_representation_-item** and **thermodynamic_temperature_measure_with_unit** with a name of ‘design temperature’.

WR8: The representation of the **plant_line_segment_definition** with the name of ‘line segment characteristics’ shall have at most one **representation_item** that is of type **measure_representation_-item** and **length_measure_with_unit** with a name of ‘elevation’.

WR9: The representation of the **plant_line_segment_definition** with the name of ‘line segment characteristics’ shall have at most one **representation_item** that is of type **measure_representation_-**

© ISO 2001 – All rights reserved

item with a name of ‘corrosion allowance’.

WR10: If the **plant_line_segment_definition** is related to a **product_definition** as a ‘segment insulation’, the **product_definition** shall have a **product_definition_shape** that has exactly one **representation** with the **name** of ‘segment insulation characteristics’.

WR11: If the **plant_line_segment_definition** is related to a **product_definition** as a ‘segment insulation’, the **product_definition** shall have a **product_definition_shape** that has exactly one **representation** with the **name** of ‘segment insulation characteristics’ that has at least one **representation_item**.

WR12: If the **plant_line_segment_definition** is related to a **product_definition** as a ‘segment insulation’, the **product_definition** shall have a **product_definition_shape** that has exactly one **representation** with the **name** of ‘segment insulation characteristics’ that has one or two **representation_item**s of type **measure_representation_item** and **length_measure_with_unit** with a **name** of ‘thickness’, ‘minimum thickness’, or ‘maximum thickness’.

WR13: If the **plant_line_segment_definition** is related to a **product_definition** as a ‘segment insulation’, the **product_definition** shall have a **product_definition_shape** that has exactly one **representation** with the **name** of ‘segment insulation characteristics’ that has at most one **representation_item** items of type **measure_representation_item** and **length_measure_with_unit** with a **name** of ‘thickness’.

WR14: If the **plant_line_segment_definition** is related to a **product_definition** as a ‘segment insulation’, the **product_definition** shall have a **product_definition_shape** that has exactly one **representation** with the **name** of ‘segment insulation characteristics’ that has at most one **representation_item** items of type **measure_representation_item** and **length_measure_with_unit** with a **name** of ‘minimum thickness’.

WR15: If the **plant_line_segment_definition** is related to a **product_definition** as a ‘segment insulation’, the **product_definition** shall have a **product_definition_shape** that has exactly one **representation** with the **name** of ‘segment insulation characteristics’ that has at most one **representation_item** items of type **measure_representation_item** and **length_measure_with_unit** with a **name** of ‘maximum thickness’.

WR16: If the **plant_line_segment_definition** is related to a **product_definition** as a ‘segment insulation’, the **product_definition** shall have a **product_definition_shape** that has exactly one **representation** with the **name** of ‘segment insulation characteristics’ that has at most one **representation_item** items of type **descriptive_representation_item** with a **name** of ‘boundaries’.

Associated global rules:

The following global rules defined in this part of ISO 10303 apply to the **plant_line_segment_definition** entity:

- **application_context_requires_ap_definition** (see 5.2.4.1);
- **dependent_instantiable_application_context** (see 5.2.4.9);
- **dependent_instantiable_product_definition_context** (see 5.2.4.11);
- **product_definition_context_name_constraint** (see 5.2.4.13).

© ISO 2001 – All rights reserved

5.2.3.1.84 plant_line_segment_termination

A **plant_line_segment_termination** is a type of **shape_aspect** that identifies the termination of a line segment.

EXPRESS specification:

```
*)
ENTITY plant_line_segment_termination
  SUBTYPE OF (shape_aspect);
WHERE
  WR1: ((SELF.description = 'piping line segment termination') AND
       ('PLANT_SPATIAL_CONFIGURATION.PLANT_LINE_SEGMENT_DEFINITION'
       IN TYPEOF (SELF.of_shape.definition))) XOR
       ((SELF.description = 'piping line termination') AND
       ('PLANT_SPATIAL_CONFIGURATION.PRODUCT_DEFINITION_RELATIONSHIP'
       IN TYPEOF (SELF.of_shape.definition)) AND
       ('PLANT_SPATIAL_CONFIGURATION.PLANT_LINE_SEGMENT_DEFINITION'
       IN TYPEOF (SELF.of_shape.definition.related_product_definition)) AND
       ('PLANT_SPATIAL_CONFIGURATION.PLANT_LINE_DEFINITION'
       IN TYPEOF (SELF.of_shape.definition.relating_product_definition)));
  WR2: SIZEOF (QUERY (sar <*
       USEDIN (SELF, 'PLANT_SPATIAL_CONFIGURATION.' +
       'SHAPE_ASPECT_RELATIONSHIP.RELATING_SHAPE_ASPECT') +
       USEDIN (SELF, 'PLANT_SPATIAL_CONFIGURATION.' +
       'SHAPE_ASPECT_RELATIONSHIP.RELATED_SHAPE_ASPECT') |
       NOT (SIZEOF (TYPEOF (sar) *
       ['PLANT_SPATIAL_CONFIGURATION.LINE_BRANCH_CONNECTION',
       'PLANT_SPATIAL_CONFIGURATION.LINE_PLANT_ITEM_CONNECTION',
       'PLANT_SPATIAL_CONFIGURATION.LINE_TERMINATION_CONNECTION'])
       = 1))) = 0;
  WR3: SIZEOF (QUERY (sar <*
       USEDIN (SELF, 'PLANT_SPATIAL_CONFIGURATION.'+
       'SHAPE_ASPECT_RELATIONSHIP.RELATED_SHAPE_ASPECT') |
       SIZEOF (TYPEOF (sar) *
       ['PLANT_SPATIAL_CONFIGURATION.LINE_BRANCH_CONNECTION',
       'PLANT_SPATIAL_CONFIGURATION.LINE_PLANT_ITEM_CONNECTION']) = 1))= 1;
END_ENTITY;
(*
```

Formal propositions:

WR1: If a **plant_line_segment_termination** is the termination of a piping line segment, it shall be an aspect of the shape of a **plant_line_segment_definition**. If the **plant_line_segment_termination** is the termination of a piping line, it shall be an aspect of the shape of a **product_definition_relationship** in which the related_product_definition is a **plant_line_segment_definition** and the relating_shape_aspect is a **plant_line_definition**.

WR2: A **plant_line_segment_termination** is the **relating_shape_aspect** or the **related_shape_aspect** in at least one **shape_aspect_relationship** that is a **line_branch_connection**, **line_plant_item_-connection**, or **line_termination_connection**.

WR3: A **plant_line_segment_termination** is the related_shape_aspect in exactly one **shape_aspect_-relationship** that is either a **line_termination_connection** or **line_branch_connection** or is the relating_shape_aspect in exactly one **line_plant_item_connection** .

Associated global rules:

The following global rules defined in this part of ISO 10303 apply to the **plant_line_segment_-termination** entity:

© ISO 2001 – All rights reserved

- **application_context_requires_ap_definition** (see 5.2.4.1);
- **dependent_instantiable_application_context** (see 5.2.4.9);
- **dependent_instantiable_product_definition_context** (see 5.2.4.11);
- **product_definition_context_name_constraint** (see 5.2.4.13).

5.2.3.1.85 plant_spatial_configuration_change_assignment

A **plant_spatial_configuration_change_assignment** assigns a **change_action** to a set of one or more **change_item**s.

EXPRESS specification:

```
*)
ENTITY plant_spatial_configuration_change_assignment
  SUBTYPE OF (action_assignment);
  items : SET [1:?] OF change_item;
WHERE
  WR1: 'PLANT_SPATIAL_CONFIGURATION.CHANGE_ACTION'
       IN TYPEOF (SELF.assigned_action);
END_ENTITY;
(*
```

Attribute definitions:

items: the set of **change_item**s that an action is assigned to.

Formal propositions:

WR1: The assigned action shall be a **change_action**.

Associated global rules:

The following global rules defined in this part of ISO 10303 apply to the **plant_spatial_configuration_-change_assignment** entity:

- **change_item_requires_creation_date** (see 5.2.4.5);
- **change_item_requires_id** (see 5.2.4.6).

5.2.3.1.86 plant_spatial_configuration_organization_assignment

A **plant_spatial_configuration_organization_assignment** assigns an **organization** to a set of one or more **catalogue**s, **change_action**s, **design_project**s, **document**s, **plant**s, **product_definition_-formation**s, **product_definition_relationship**s, and **site**s.

EXPRESS specification:

```
*)
ENTITY plant_spatial_configuration_organization_assignment
  SUBTYPE OF (organization_assignment);
  items : SET [1:?] OF plant_spatial_configuration_organization_item;
WHERE
  WR1: plant_spatial_configuration_organization_correlation (SELF);
END_ENTITY;
   (*
```


© ISO 2001 – All rights reserved

Attribute definitions:

items: the set of **catalogue**s, **change_action**s, **design_project**s, **document**s, **plant**s, **product_-definition_formation**s, **product_definition_relationship**s, and **site**s that an **organization** is assigned to.

Formal propositions:

WR1: The **plant_spatial_configuration_organization_correlation** function that correlates roles of organizations to elements of product data shall be satisfied.

5.2.3.1.87 plant_spatial_configuration_person_and_organization_-assignment

A **plant_spatial_configuration_person_and_organization_assignment** assigns a **person_and_-organization** to a set of one or more **change_item**s, **plant**s, and **site**s.

EXPRESS specification:

```
*)
ENTITY plant_spatial_configuration_person_and_organization_assignment
  SUBTYPE OF (person_and_organization_assignment);
  items : SET [1:?] OF
          plant_spatial_configuration_person_and_organization_item;
WHERE
  WR1: plant_spatial_configuration_person_and_organization_correlation
             (SELF);
END_ENTITY;
(*
```

Attribute definitions:

items: the set of **change_item**s, **plant**s, and **site**s that a **person_and_organization** is assigned to.

Formal propositions:

WR1: The **plant_spatial_configuration_person_and_organization_correlation** function that correlates roles of persons and organizations to elements of product data shall be satisfied.

5.2.3.1.88 plant_spatial_configuration_person_assignment

A **plant_spatial_configuration_person_assignment** assigns a **person** to a set of one or more **document**s, **plant**s, **product_definition_relationship**s, and **site**s.

EXPRESS specification:

```
*)
ENTITY plant_spatial_configuration_person_assignment
  SUBTYPE OF (person_assignment);
  items : SET [1:?] OF plant_spatial_configuration_person_item;
WHERE
  WR1: plant_spatial_configuration_person_correlation (SELF);
END_ENTITY;
(*
```

Attribute definitions:

items: the set of **document**s, **plant**s, **product_definition_relationship**s, and **site**s that a **person** is

© ISO 2001 – All rights reserved

assigned to.

Formal propositions:

WR1: The **plant_spatial_configuration_person_correlation** function that correlates roles of persons to elements of product data shall be satisfied.

5.2.3.1.89 process_capability

A **process_capability** is a type of **property_definition** that identifies the physical or chemical process that is, or is intended to be, carried out by a **plant**.

EXPRESS specification:

```
*)
ENTITY process_capability
  SUBTYPE OF (property_definition);
WHERE
  WR1: 'PLANT_SPATIAL_CONFIGURATION.PLANT' IN
       TYPEOF(SELF.definition\product_definition.formation.of_product);
  WR2: SIZEOF (QUERY (pdr <* USEDIN (SELF,
       'PLANT_SPATIAL_CONFIGURATION.PROPERTY_DEFINITION_REPRESENTATION.' +
       'DEFINITION') |
       (pdr.used_representation.name = 'production capacity') AND
       (NOT (SIZEOF (QUERY (it <* pdr.used_representation.items |
       ('PLANT_SPATIAL_CONFIGURATION.DESCRIPTIVE_REPRESENTATION_ITEM'
       IN TYPEOF (it)) AND
       (it.name = 'production type'))) = 1)))) = 0;
END_ENTITY;
(*
```

Formal propositions:

WR1: A **process_capability** is a property of a **plant**.

WR2: The **representation** instances associated with a **process_capability** shall have a name of ‘production capacity’ and shall contain exactly one **descriptive_representation_item** with a name of ‘production type’.

5.2.3.1.90 purchase_assignment

A **purchase_assignment** assigns a set of one or more **product**s to an **action** to identify that the **product** is purchased.

EXPRESS specification:

```
*)
ENTITY purchase_assignment
  SUBTYPE OF (action_assignment);
  items : SET [1:?] OF purchase_item;
END_ENTITY;
(*
```

Attribute definitions:

items: the set of **product**s that are purchased.

© ISO 2001 – All rights reserved

5.2.3.1.91 reducer_fitting_class

A **reducer_fitting_class** is a type of **group** that classifies the items that are assigned to it as reducer fittings.

EXPRESS specification:

```
*)
ENTITY reducer_fitting_class
  SUBTYPE OF (group);
WHERE
  WR1: SIZEOF (QUERY (aca <* QUERY (ca <* USEDIN (SELF,
       'PLANT_SPATIAL_CONFIGURATION.CLASSIFICATION_ASSIGNMENT.' +
       'ASSIGNED_CLASS') |
       'PLANT_SPATIAL_CONFIGURATION.APPLIED_CLASSIFICATION_ASSIGNMENT' IN
       TYPEOF (ca)) |
       NOT (SIZEOF (QUERY (it <* aca.items |
       NOT ('PLANT_SPATIAL_CONFIGURATION.PIPING_COMPONENT_DEFINITION' IN
       TYPEOF (it)))) = 0))) = 0;
  WR2: SIZEOF (QUERY (aca <* QUERY (ca <* USEDIN (SELF,
       'PLANT_SPATIAL_CONFIGURATION.CLASSIFICATION_ASSIGNMENT.' +
       'ASSIGNED_CLASS') |
       'PLANT_SPATIAL_CONFIGURATION.APPLIED_CLASSIFICATION_ASSIGNMENT' IN
       TYPEOF (ca)) |
       NOT (SIZEOF (QUERY (pcd <* QUERY (it <* aca.items |
       'PLANT_SPATIAL_CONFIGURATION.PIPING_COMPONENT_DEFINITION' IN
       TYPEOF (it)) |
       NOT (SIZEOF (QUERY (aca1 <* USEDIN (pcd.formation.of_product,
       'PLANT_SPATIAL_CONFIGURATION.' +
       'APPLIED_CLASSIFICATION_ASSIGNMENT.ITEMS') |
       class_in_tree (aca1.assigned_class, 'reducer')))
       = 1))) = 0))) = 0;
END_ENTITY;
(*
```

Formal propositions:

WR1: A **reducer_fitting_class** shall classify items of type **piping_component_definition**.

WR2: A **reducer_fitting_class** shall classify items of type **piping_component_definition** that are a definition of a **product** that is categorized as a ‘reducer’.

5.2.3.1.92 reference_geometry

A **reference_geometry** is a type of **derived_shape_aspect** that is a geometric element that is not part of the definition of the shape of **plant_item**, but is provided as supplementary geometric information. A **reference_geometry** has a relationship to the shape definition geometry and may be derivable from shape geometry.

EXAMPLE Centrelines of symmetric elements and origin points are considered **reference_geometry**.

EXPRESS specification:

```
*)
ENTITY reference_geometry
  SUBTYPE OF (derived_shape_aspect);
WHERE
  WR1: SIZEOF (QUERY (pd <* USEDIN (SELF, 'PLANT_SPATIAL_CONFIGURATION.' +
       'PROPERTY_DEFINITION.DEFINITION') |
       NOT (SIZEOF (USEDIN (pd, 'PLANT_SPATIAL_CONFIGURATION.' +
       'PROPERTY_DEFINITION_REPRESENTATION.DEFINITION')) >= 1))) = 0;
END_ENTITY;
```


© ISO 2001 – All rights reserved

```
(*
```

Formal propositions:

WR1: Each **reference_geometry** shall have at least one **representation**.

5.2.3.1.93 reinforcing_component_definition

A **reinforcing_component_definition** is a type of **product_definition** that defines a reinforcing component.

EXPRESS specification

```
*)
ENTITY reinforcing_component_definition
  SUBTYPE OF (product_definition);
END_ENTITY;
(*
```

5.2.3.1.94 required_material_property

A **required_material_property** is a type of **material_property** that specifies the material or the requirements for the material that a plant item should be made from.

EXPRESS specification:

```
*)
ENTITY required_material_property
  SUBTYPE OF (material_property);
WHERE
  WR1: (SIZEOF (TYPEOF (SELF\property_definition.definition) *
       ['PLANT_SPATIAL_CONFIGURATION.PLANT_ITEM_CONNECTOR',
       'PLANT_SPATIAL_CONFIGURATION.' +
       'EXTERNALLY_DEFINED_PLANT_ITEM_DEFINITION']) = 1) OR
       (('PLANT_SPATIAL_CONFIGURATION.PRODUCT_DEFINITION' IN
       TYPEOF (SELF.definition)) AND
       (SIZEOF (QUERY (pc <* SELF\property_definition.
       definition\product_definition.formation.of_product.
       frame_of_reference |
       pc.discipline_type = 'process plant')) = 1));
  WR2: SIZEOF (QUERY (ra <* QUERY (pdr <* USEDIN (SELF,
       'PLANT_SPATIAL_CONFIGURATION.' +
       'PROPERTY_DEFINITION_RELATIONSHIP.RELATED_PROPERTY_DEFINITION') |
       pdr.name = 'requirement allocation') |
       'PLANT_SPATIAL_CONFIGURATION.MATERIAL_PROPERTY' IN
       TYPEOF (ra.relating_property_definition))) >= 1;
END_ENTITY;
(*
```

Formal propositions:

WR1: A **required_material_property** shall be a property of a **plant_item_connector**, **externally_-defined_plant_item**, or a **product_definition** that defines a plant item.

WR2: A **required_material_property** shall be related to at least one **material_property** as the ‘requirement allocation’.

5.2.3.1.95 reserved_space

© ISO 2001 – All rights reserved

A **reserved_space** is a type of **shape_aspect** that identifies a space that is reserved for a plant item.

```
*)
ENTITY reserved_space
  SUBTYPE OF (shape_aspect);
WHERE
  WR1: SELF\shape_aspect.of_shape\property_definition.
       definition\product_definition.
       frame_of_reference\application_context_element.name =
       'physical occurrence';
END_ENTITY;
(*
```

Formal propositions:

WR1: A **reserved_space** shall be an aspect of the definition of the shape of a **product_definition** with a context with the name 'physical occurrence'.

Associated global rules:

The following global rules defined in this part of ISO 10303 apply to the **reserved_space** entity:

- **application_context_requires_ap_definition** (see 5.2.4.1);
- **dependent_instantiable_application_context** (see 5.2.4.9);
- **dependent_instantiable_product_definition_context** (see 5.2.4.11);
- **product_definition_context_name_constraint** (see 5.2.4.13);
- **product_definition_usage_constraint** (see 5.2.4.14).

5.2.3.1.96 site

A **site** is a type of **characterized_object** and **property_definition** that identifies the geographic and topographic characteristics of the location of a plant.

EXPRESS specification:

```
*)
ENTITY site
  SUBTYPE OF (characterized_object, property_definition);
WHERE
  WR1: 'PLANT_SPATIAL_CONFIGURATION.PLANT' IN
       TYPEOF (SELF\property_definition.definition\product_definition.
       formation.of_product);
END_ENTITY;
(*
```

Formal propositions:

WR1: Each **site** shall be a property of a **plant**.

Associated global rule:

The following global rule defined in this part of ISO 10303 applies to the **site** entity:

- **subtype_exclusive_characterized_object** (see 5.2.4.15)

© ISO 2001 – All rights reserved

5.2.3.1.97 site_building

A **site_building** is a type of **property_definition** that identifies a partially or totally enclosed structure located on a site.

EXPRESS specification:

```
*)
ENTITY site_building
  SUBTYPE OF (property_definition);
WHERE
  WR1: 'PLANT_SPATIAL_CONFIGURATION.SITE' IN
       TYPEOF (SELF.definition);
  WR2: SIZEOF (QUERY (pdr <* USEDIN (SELF,
       'PLANT_SPATIAL_CONFIGURATION.' +
       'PROPERTY_DEFINITION_REPRESENTATION.DEFINITION') |
       (pdr.used_representation.name = 'building number') AND
       (SIZEOF (QUERY (it <* pdr.used_representation.items |
       ('PLANT_SPATIAL_CONFIGURATION.DESCRIPTIVE_REPRESENTATION_ITEM' IN
       TYPEOF (it)))) = 1))) = 1;
  WR3: SIZEOF (QUERY (pdr <* USEDIN (SELF,
       'PLANT_SPATIAL_CONFIGURATION.' +
       'PROPERTY_DEFINITION_REPRESENTATION.DEFINITION') |
       SIZEOF (QUERY (it <* pdr.used_representation.items |
       (SIZEOF (['PLANT_SPATIAL_CONFIGURATION.AXIS2_PLACEMENT_2D',
       'PLANT_SPATIAL_CONFIGURATION.AXIS2_PLACEMENT_3D'] *
       TYPEOF (it)) = 1) AND
       (it.name = 'building orientation') AND
       (it.location.name = 'building location'))) = 1)) <= 1;
END_ENTITY;
(*
```

Formal propositions:

WR1: A **site_building** shall be a property of a site.

WR2: The **site_building** shall have exactly one **representation** with a name of ‘building number’ that contains exactly one **representation_item** that is a **descriptive_representation_item**.

WR3: The **site_building** shall have at most one **representation** that contains exactly one **axis2_-placement_2d** or **axis2_placement_3d** with a **name** of ‘building orientation’ and a **location** that has a **name** of ‘building location’.

5.2.3.1.98 site_feature

A **site_feature** is a type of **property_definition** that identifies the composition, proportions, form or outward appearance of part of a site.

EXPRESS specification:

```
*)
ENTITY site_feature
  SUBTYPE OF (property_definition);
WHERE
  WR1: 'PLANT_SPATIAL_CONFIGURATION.SITE' IN
       TYPEOF(SELF.definition);
  WR2: SIZEOF (USEDIN (SELF, 'PLANT_SPATIAL_CONFIGURATION.' +
       'PROPERTY_DEFINITION_REPRESENTATION.DEFINITION')) = 3;
  WR3: SIZEOF (QUERY (pdr <* USEDIN (SELF,
       'PLANT_SPATIAL_CONFIGURATION.' +
       'PROPERTY_DEFINITION_REPRESENTATION.DEFINITION') |
       SIZEOF (QUERY (it <* pdr.used_representation.items |
```


© ISO 2001 – All rights reserved

```
        ('PLANT_SPATIAL_CONFIGURATION.DESCRIPTIVE_REPRESENTATION_ITEM' IN
        TYPEOF (it)) AND
        (it.name = 'site feature type'))) = 1)) = 1;
  WR4: SIZEOF (QUERY (pdr <* USEDIN (SELF,
        'PLANT_SPATIAL_CONFIGURATION.' +
        'PROPERTY_DEFINITION_REPRESENTATION.DEFINITION') |
        SIZEOF (QUERY (it <* pdr.used_representation.items |
        (SIZEOF (['PLANT_SPATIAL_CONFIGURATION.AXIS2_PLACEMENT_2D',
        'PLANT_SPATIAL_CONFIGURATION.AXIS2_PLACEMENT_3D'] *
        TYPEOF (it)) = 1) AND
        (it.name = 'feature orientation') AND
        (it.location.name = 'feature location'))) = 1)) = 1;
  WR5: SIZEOF (QUERY (pdr <* USEDIN (SELF,
        'PLANT_SPATIAL_CONFIGURATION.' +
        'PROPERTY_DEFINITION_REPRESENTATION.DEFINITION') |
        SIZEOF (QUERY (it <* pdr.used_representation.items |
        ('PLANT_SPATIAL_CONFIGURATION.DESCRIPTIVE_REPRESENTATION_ITEM' IN
        TYPEOF (pdr.used_representation)) AND
        (it.name = 'origin type') AND
        (it.description IN ['man made', 'natural']))) = 1)) = 1;
END_ENTITY;
(*
```

Formal propositions:

WR1: A **site_feature** is a property of a **site**.

WR2: A **site_feature** is referenced by exactly three **property_definition_representation** instances.

WR3: A **site_feature** shall have exactly one **representation** contains exactly one item of type **descriptive_representation_item** with the name of ‘site feature type’.

WR4: The **site_feature** shall have at exactly one **representation** that contains exactly one **axis2_-placement_2d** or **axis2_placement_3d** with a **name** of ‘feature orientation’ and a **location** that has a **name** of ‘feature location’.

WR5: The **site_feature** shall have exactly one **representation** that contains exactly one **representation_item** that is a **descriptive_representation_item** with the name of ‘origin type’ and a **description** of either ‘man made’ or ‘natural’.

5.2.3.1.99 site_representation

A **site_representation** is a type of **shape_representation** that represents the shape properties of a **site**.

EXPRESS specification:

```
*)
ENTITY site_representation
  SUBTYPE OF (shape_representation);
WHERE
  WR1: SIZEOF (QUERY (pdr <* USEDIN (SELF,'PLANT_SPATIAL_CONFIGURATION.' +
        'PROPERTY_DEFINITION_REPRESENTATION.USED_REPRESENTATION') |
        NOT('PLANT_SPATIAL_CONFIGURATION.SITE' IN
        TYPEOF (pdr.definition.definition)))) = 0;
  WR2: SIZEOF (QUERY (item <* SELF.items |
        NOT (SIZEOF (['PLANT_SPATIAL_CONFIGURATION.CONNECTED_FACE_SET',
        'PLANT_SPATIAL_CONFIGURATION.GEOMETRIC_CURVE_SET'] *
        TYPEOF (item)) = 1))) = 1;
  WR3: SIZEOF (QUERY (cfs <* QUERY (item <* SELF.items |
        'PLANT_SPATIAL_CONFIGURATION.CONNECTED_FACE_SET' IN TYPEOF (item)) |
        NOT (SIZEOF (QUERY (fcs <* cfs\connected_face_set.cfs_faces |
        NOT (SIZEOF (QUERY (bnds <* fcs.bounds |
        NOT ('PLANT_SPATIAL_CONFIGURATION.POLY_LOOP'
```


© ISO 2001 – All rights reserved

```
       IN TYPEOF (bnds.bound))))
       = 0))) = 0))) = 0;
  WR4: SIZEOF (QUERY (cfs <* QUERY (item <* SELF.items |
       'PLANT_SPATIAL_CONFIGURATION.CONNECTED_FACE_SET' IN TYPEOF (item)) |
       NOT (SIZEOF (QUERY (fcs <* cfs\connected_face_set.cfs_faces |
       NOT (SIZEOF (QUERY (bnds <* fcs.bounds |
       NOT (SIZEOF (bnds.bound\poly_loop.polygon) = 3)))
       = 0))) = 0))) = 0;
  WR5: SIZEOF (QUERY (gcs <* QUERY (item <* SELF.items |
       'PLANT_SPATIAL_CONFIGURATION.GEOMETRIC_CURVE_SET'
       IN TYPEOF (item)) |
       NOT (SIZEOF (QUERY (el <* gcs\geometric_set.elements |
       NOT (SIZEOF (['PLANT_SPATIAL_CONFIGURATION.CARTESIAN_POINT',
       'PLANT_SPATIAL_CONFIGURATION.POLYLINE'] * TYPEOF (el))
       = 1))) = 0))) = 0;
  WR6: SIZEOF (QUERY (gcs <* QUERY (item <* SELF.items |
       'PLANT_SPATIAL_CONFIGURATION.GEOMETRIC_CURVE_SET'
       IN TYPEOF (item)) |
       NOT (SIZEOF (QUERY (el <* gcs\geometric_set.elements |
       'PLANT_SPATIAL_CONFIGURATION.CARTESIAN_POINT' IN TYPEOF (el)))
       >= 1))) = 0;
  WR7: SIZEOF (QUERY (gcs <* QUERY (item <* SELF.items |
       'PLANT_SPATIAL_CONFIGURATION.GEOMETRIC_CURVE_SET'
       IN TYPEOF (item)) |
       NOT (SIZEOF (QUERY (pline <* QUERY (el <*
       gcs\geometric_set.elements |
       'PLANT_SPATIAL_CONFIGURATION.POLYLINE' IN TYPEOF (el)) |
       NOT (SIZEOF (QUERY (pline_pt <* pline\polyline.points |
       NOT (pline_pt IN gcs\geometric_set.elements))) = 0))) = 0))) = 0;
END_ENTITY;
(*
```

Formal propositions:

WR1: A **site_representation** shall be used to represent a **site**.

WR2: A **site_representation** shall have in its set of items exactly one **connected_face_set** or **geometric_curve_set**.

WR3: If the **representation_item** is a **connected_face_set**, it shall contain faces that are bounded by **poly_loop**s.

WR4: If the **representation_item** is a **connected_face_set**, all of its **face** instances shall be bounded by **poly_loop**s with topology defined by three **cartesian_point**s.

WR5: If the **representation_item** is a **geometric_curve_set**, its **elements** set shall consist of **cartesian_point** or **polyline**.

WR6: If the **representation_item** is a **geometric_curve_set**, its **elements** shall consist of at least one **cartesian_point**.

WR7: If the **representation_item** is a **geometric_curve_set**, its **elements** that are of type **polyline** shall reference only points that are in the **elements** set.

Associated global rule:

The following global rule defined in this part of ISO 10303 applies to the **site_representation** entity:

- **subtype_mandatory_shape_representation** (see 5.2.4.18)

© ISO 2001 – All rights reserved

5.2.3.1.100 sited_plant

A **sited_plant** is a type of **property_definition** that specifies a plant that is located on a site. The location need not be specified.

EXPRESS specification:

```
*)
ENTITY sited_plant
  SUBTYPE OF (property_definition);
UNIQUE
  UR1: SELF\property_definition.definition;
WHERE
  WR1: 'PLANT_SPATIAL_CONFIGURATION.PRODUCT_DEFINITION' IN TYPEOF
       (SELF.definition);
  WR2: SELF.definition.frame_of_reference.name = 'physical occurrence';
END_ENTITY;
(*
```

Formal propositions:

UR1: Each **sited_plant** shall be related to zero or one **characterized_definition.**

WR1: A **sited_plant** shall be the property of a **product_definition**.

WR2: A **sited_plant** shall be the property of a **product_definition** that is a physical occurrence.

5.2.3.1.101 spacer_fitting_class

A **spacer_fitting_class** is a type of **group** that classifies the items that are assigned to it as spacer fittings.

EXPRESS specification:

```
*)
ENTITY spacer_fitting_class
  SUBTYPE OF (group);
WHERE
  WR1: SIZEOF (QUERY (aca <* QUERY (ca <* USEDIN (SELF,
       'PLANT_SPATIAL_CONFIGURATION.CLASSIFICATION_ASSIGNMENT.' +
       'ASSIGNED_CLASS') |
       'PLANT_SPATIAL_CONFIGURATION.APPLIED_CLASSIFICATION_ASSIGNMENT' IN
       TYPEOF (ca)) |
       NOT (SIZEOF (QUERY (it <* aca.items |
       NOT ('PLANT_SPATIAL_CONFIGURATION.PIPING_COMPONENT_DEFINITION' IN
       TYPEOF (it)))) = 0))) = 0;
  WR2: SIZEOF (QUERY (aca <* QUERY (ca <* USEDIN (SELF,
       'PLANT_SPATIAL_CONFIGURATION.CLASSIFICATION_ASSIGNMENT.' +
       'ASSIGNED_CLASS') |
       'PLANT_SPATIAL_CONFIGURATION.APPLIED_CLASSIFICATION_ASSIGNMENT' IN
       TYPEOF (ca)) |
       NOT (SIZEOF (QUERY (pcd <* QUERY (it <* aca.items |
       'PLANT_SPATIAL_CONFIGURATION.PIPING_COMPONENT_DEFINITION' IN
       TYPEOF (it)) |
       NOT (SIZEOF (QUERY (aca1 <* USEDIN (pcd.formation.of_product,
       'PLANT_SPATIAL_CONFIGURATION.' +
       'APPLIED_CLASSIFICATION_ASSIGNMENT.ITEMS') |
       class_in_tree (aca1.assigned_class, 'spacer')))
       = 1))) = 0))) = 0;
END_ENTITY;
(*
```


© ISO 2001 – All rights reserved

Formal propositions:

WR1: A **spacer_fitting_class** shall classify items of type **piping_component_definition**.

WR2: A **spacer_fitting_class** shall classify items of type **piping_component_definition** that are a definition of a **product** that is categorized as a 'spacer'.

5.2.3.1.102 specialty_item_class

A **specialty_item_class** is a type of **group** that classifies the items are assigned to it as specialty items. The name of the **specialty_item_class** may further classify the assigned items.

EXPRESS specification:

```
*)
ENTITY specialty_item_class
  SUBTYPE OF (group);
END_ENTITY;
(*
```

5.2.3.1.103 stream_design_case

A **stream_design_case** is a type of **property_definition** and **characterized_object** that identifies the characteristics of a gas, liquid, vapour, or particulate stream.

EXPRESS specification:

```
*)
ENTITY stream_design_case
  SUBTYPE OF (property_definition, characterized_object);
WHERE
  WR1: SIZEOF (QUERY (pd <* USEDIN (SELF, 'PLANT_SPATIAL_CONFIGURATION.' +
       'PROPERTY_DEFINITION.DEFINITION') |
       'PLANT_SPATIAL_CONFIGURATION.STREAM_PHASE' IN
       TYPEOF (pd))) >= 1;
  WR2: SIZEOF (QUERY (pdr <* USEDIN (SELF, 'PLANT_SPATIAL_CONFIGURATION.' +
       'PROPERTY_DEFINITION_REPRESENTATION.DEFINITION') |
       pdr.used_representation.name = 'stream flow characteristics')) = 1;
  WR3: SIZEOF (QUERY (sfc <* QUERY (pdr <* USEDIN (SELF,
       'PLANT_SPATIAL_CONFIGURATION.' +
       'PROPERTY_DEFINITION_REPRESENTATION.DEFINITION') |
       pdr.used_representation.name = 'stream flow characteristics') |
       NOT (SIZEOF (sfc.used_representation.items) >= 2))) = 0;
  WR4: SIZEOF (QUERY (sfc <* QUERY (pdr <* USEDIN (SELF,
       'PLANT_SPATIAL_CONFIGURATION.' +
       'PROPERTY_DEFINITION_REPRESENTATION.DEFINITION') |
       pdr.used_representation.name = 'stream flow characteristics') |
       NOT ({1 <= SIZEOF (QUERY (it <* sfc.used_representation.items |
       ('PLANT_SPATIAL_CONFIGURATION.MEASURE_REPRESENTATION_ITEM' IN
       TYPEOF (it)) AND
       (it.name IN ['flow rate', 'minimum flow rate',
       'maximum flow rate']))) <= 2}))) = 0;
  WR5: SIZEOF (QUERY (sfc <* QUERY (pdr <* USEDIN (SELF,
       'PLANT_SPATIAL_CONFIGURATION.' +
       'PROPERTY_DEFINITION_REPRESENTATION.DEFINITION') |
       pdr.used_representation.name = 'stream flow characteristics') |
       NOT (SIZEOF (QUERY (it <* sfc.used_representation.items |
       ('PLANT_SPATIAL_CONFIGURATION.MEASURE_REPRESENTATION_ITEM' IN
       TYPEOF (it)) AND
       (it.name = 'flow rate'))) <= 1))) = 0;
  WR6: SIZEOF (QUERY (sfc <* QUERY (pdr <* USEDIN (SELF,
       'PLANT_SPATIAL_CONFIGURATION.' +
          'PROPERTY_DEFINITION_REPRESENTATION.DEFINITION') |
```


© ISO 2001 – All rights reserved

```
      pdr.used_representation.name = 'stream flow characteristics') |
      NOT (SIZEOF (QUERY (it <* sfc.used_representation.items |
      ('PLANT_SPATIAL_CONFIGURATION.MEASURE_REPRESENTATION_ITEM' IN
      TYPEOF (it)) AND
      (it.name = 'minimum flow rate'))) <= 1))) = 0;
 WR7: SIZEOF (QUERY (sfc <* QUERY (pdr <* USEDIN (SELF,
      'PLANT_SPATIAL_CONFIGURATION.' +
      'PROPERTY_DEFINITION_REPRESENTATION.DEFINITION') |
      pdr.used_representation.name = 'stream flow characteristics') |
      NOT (SIZEOF (QUERY (it <* sfc.used_representation.items |
      ('PLANT_SPATIAL_CONFIGURATION.MEASURE_REPRESENTATION_ITEM' IN
      TYPEOF (it)) AND
      (it.name = 'maximum flow rate'))) <= 1))) = 0;
 WR8: SIZEOF (QUERY (sfc <* QUERY (pdr <* USEDIN (SELF,
      'PLANT_SPATIAL_CONFIGURATION.' +
      'PROPERTY_DEFINITION_REPRESENTATION.DEFINITION') |
      pdr.used_representation.name = 'stream flow characteristics') |
      NOT ({1 <= SIZEOF (QUERY (it <* sfc.used_representation.items |
      ('PLANT_SPATIAL_CONFIGURATION.MEASURE_REPRESENTATION_ITEM' IN
      TYPEOF (it)) AND
      (it.name IN ['pressure', 'minimum pressure',
      'maximum pressure']))) <= 2}))) = 0;
 WR9: SIZEOF (QUERY (sfc <* QUERY (pdr <* USEDIN (SELF,
      'PLANT_SPATIAL_CONFIGURATION.' +
      'PROPERTY_DEFINITION_REPRESENTATION.DEFINITION') |
      pdr.used_representation.name = 'stream flow characteristics') |
      NOT (SIZEOF (QUERY (it <* sfc.used_representation.items |
      ('PLANT_SPATIAL_CONFIGURATION.MEASURE_REPRESENTATION_ITEM' IN
      TYPEOF (it)) AND
      (it.name = 'pressure'))) <= 1))) = 0;
WR10: SIZEOF (QUERY (sfc <* QUERY (pdr <* USEDIN (SELF,
      'PLANT_SPATIAL_CONFIGURATION.' +
      'PROPERTY_DEFINITION_REPRESENTATION.DEFINITION') |
      pdr.used_representation.name = 'stream flow characteristics') |
      NOT (SIZEOF (QUERY (it <* sfc.used_representation.items |
      ('PLANT_SPATIAL_CONFIGURATION.MEASURE_REPRESENTATION_ITEM' IN
      TYPEOF (it)) AND
      (it.name = 'minimum pressure'))) <= 1))) = 0;
WR11: SIZEOF (QUERY (sfc <* QUERY (pdr <* USEDIN (SELF,
      'PLANT_SPATIAL_CONFIGURATION.' +
      'PROPERTY_DEFINITION_REPRESENTATION.DEFINITION') |
      pdr.used_representation.name = 'stream flow characteristics') |
      NOT (SIZEOF (QUERY (it <* sfc.used_representation.items |
      ('PLANT_SPATIAL_CONFIGURATION.MEASURE_REPRESENTATION_ITEM' IN
      TYPEOF (it)) AND
      (it.name = 'maximum pressure'))) <= 1))) = 0;
WR12: SIZEOF (QUERY (sfc <* QUERY (pdr <* USEDIN (SELF,
      'PLANT_SPATIAL_CONFIGURATION.' +
      'PROPERTY_DEFINITION_REPRESENTATION.DEFINITION') |
      pdr.used_representation.name = 'stream flow characteristics') |
      NOT (SIZEOF (QUERY (it <* sfc.used_representation.items |
      ('PLANT_SPATIAL_CONFIGURATION.DESCRIPTIVE_REPRESENTATION_ITEM' IN
      TYPEOF (it)) AND
      (it.name = 'stream data reference'))) <= 1))) = 0;
WR13: (NOT (SIZEOF (QUERY (pdr <* USEDIN (SELF,
      'PLANT_SPATIAL_CONFIGURATION.' +
      'PROPERTY_DEFINITION_RELATIONSHIP.RELATING_PROPERTY_DEFINITION') |
      pdr.related_property_definition.name =
      'service characteristics')) >= 1)) OR
      (SIZEOF (QUERY (sc <* QUERY (pdr <* USEDIN (SELF,
      'PLANT_SPATIAL_CONFIGURATION.' +
      'PROPERTY_DEFINITION_RELATIONSHIP.RELATING_PROPERTY_DEFINITION') |
      pdr.related_property_definition.name =
      'service characteristics') |
      NOT (SIZEOF (QUERY (pdr <* USEDIN (sc.related_property_definition,
      'PLANT_SPATIAL_CONFIGURATION.' +
      'PROPERTY_DEFINITION_REPRESENTATION.DEFINITION') |
      pdr.used_representation.name =
      'service operating characteristics')) = 1))) = 0);
WR14: (NOT (SIZEOF (QUERY (pdr <* USEDIN (SELF,
```


© ISO 2001 – All rights reserved

```
       'PLANT_SPATIAL_CONFIGURATION.' +
       'PROPERTY_DEFINITION_RELATIONSHIP.RELATING_PROPERTY_DEFINITION') |
       pdr.related_property_definition.name =
       'service characteristics')) >= 1)) OR
       (SIZEOF (QUERY (sc <* QUERY (pdr <* USEDIN (SELF,
       'PLANT_SPATIAL_CONFIGURATION.' +
       'PROPERTY_DEFINITION_RELATIONSHIP.RELATING_PROPERTY_DEFINITION') |
       pdr.related_property_definition.name =
       'service characteristics') |
       NOT (SIZEOF (QUERY (soc <* QUERY (pdr <*
       USEDIN (sc.related_property_definition,
       'PLANT_SPATIAL_CONFIGURATION.' +
       'PROPERTY_DEFINITION_REPRESENTATION.DEFINITION') |
       pdr.used_representation.name =
       'service operating characteristics') |
       NOT (SIZEOF (soc.used_representation.items) >= 3))) = 0))) = 0);
 WR15: (NOT (SIZEOF (QUERY (pdr <* USEDIN (SELF,
       'PLANT_SPATIAL_CONFIGURATION.' +
       'PROPERTY_DEFINITION_RELATIONSHIP.RELATING_PROPERTY_DEFINITION') |
       pdr.related_property_definition.name =
       'service characteristics')) >= 1)) OR
       (SIZEOF (QUERY (sc <* QUERY (pdr <* USEDIN (SELF,
       'PLANT_SPATIAL_CONFIGURATION.' +
       'PROPERTY_DEFINITION_RELATIONSHIP.RELATING_PROPERTY_DEFINITION') |
       pdr.related_property_definition.name = 'service characteristics') |
       NOT (SIZEOF (QUERY (soc <* QUERY (pdr <*
       USEDIN (sc.related_property_definition,
       'PLANT_SPATIAL_CONFIGURATION.' +
       'PROPERTY_DEFINITION_REPRESENTATION.DEFINITION') |
       pdr.used_representation.name =
       'service operating characteristics') |
       {1 <= SIZEOF (QUERY (it <* soc.used_representation.items |
       (SIZEOF (TYPEOF (it) *
       ['PLANT_SPATIAL_CONFIGURATION.MEASURE_REPRESENTATION_ITEM',
       'PLANT_SPATIAL_CONFIGURATION.' +
       'THERMODYNAMIC_TEMPERATURE_MEASURE_WITH_UNIT']) = 2) AND
       (it.name IN ['temperature', 'minimum temperature',
       'maximum temperature'])))) <= 2})) = 1))) = 0);
 WR16: (NOT (SIZEOF (QUERY (pdr <* USEDIN (SELF,
       'PLANT_SPATIAL_CONFIGURATION.' +
       'PROPERTY_DEFINITION_RELATIONSHIP.RELATING_PROPERTY_DEFINITION') |
       pdr.related_property_definition.name =
       'service characteristics')) >= 1)) OR
       (SIZEOF (QUERY (sc <* QUERY (pdr <* USEDIN (SELF,
       'PLANT_SPATIAL_CONFIGURATION.' +
       'PROPERTY_DEFINITION_RELATIONSHIP.RELATING_PROPERTY_DEFINITION') |
       pdr.related_property_definition.name = 'service characteristics') |
       NOT (SIZEOF (QUERY (soc <* QUERY (pdr <*
       USEDIN (sc.related_property_definition,
       'PLANT_SPATIAL_CONFIGURATION.' +
       'PROPERTY_DEFINITION_REPRESENTATION.DEFINITION') |
       pdr.used_representation.name =
       'service operating characteristics') |
       SIZEOF (QUERY (it <* soc.used_representation.items |
       (SIZEOF (TYPEOF (it) *
       ['PLANT_SPATIAL_CONFIGURATION.MEASURE_REPRESENTATION_ITEM',
       'PLANT_SPATIAL_CONFIGURATION.' +
       'THERMODYNAMIC_TEMPERATURE_MEASURE_WITH_UNIT']) = 2) AND
       (it.name = 'temperature'))) <= 1)) = 1))) = 0);
 WR17: (NOT (SIZEOF (QUERY (pdr <* USEDIN (SELF,
       'PLANT_SPATIAL_CONFIGURATION.' +
       'PROPERTY_DEFINITION_RELATIONSHIP.RELATING_PROPERTY_DEFINITION') |
       pdr.related_property_definition.name =
       'service characteristics')) >= 1)) OR
       (SIZEOF (QUERY (sc <* QUERY (pdr <* USEDIN (SELF,
       'PLANT_SPATIAL_CONFIGURATION.' +
       'PROPERTY_DEFINITION_RELATIONSHIP.RELATING_PROPERTY_DEFINITION') |
       pdr.related_property_definition.name = 'service characteristics') |
       NOT (SIZEOF (QUERY (soc <* QUERY (pdr <*
       USEDIN (sc.related_property_definition,
```


© ISO 2001 – All rights reserved

```
      'PLANT_SPATIAL_CONFIGURATION.' +
      'PROPERTY_DEFINITION_REPRESENTATION.DEFINITION') |
      pdr.used_representation.name =
      'service operating characteristics') |
      SIZEOF (QUERY (it <* soc.used_representation.items |
      (SIZEOF (TYPEOF (it) *
      ['PLANT_SPATIAL_CONFIGURATION.MEASURE_REPRESENTATION_ITEM',
      'PLANT_SPATIAL_CONFIGURATION.' +
      'THERMODYNAMIC_TEMPERATURE_MEASURE_WITH_UNIT']) = 2) AND
      (it.name = 'minimum temperature'))) <= 1)) = 1))) = 0);
WR18: (NOT (SIZEOF (QUERY (pdr <* USEDIN (SELF,
      'PLANT_SPATIAL_CONFIGURATION.' +
      'PROPERTY_DEFINITION_RELATIONSHIP.RELATING_PROPERTY_DEFINITION') |
      pdr.related_property_definition.name =
      'service characteristics')) >= 1)) OR
      (SIZEOF (QUERY (sc <* QUERY (pdr <* USEDIN (SELF,
      'PLANT_SPATIAL_CONFIGURATION.' +
      'PROPERTY_DEFINITION_RELATIONSHIP.RELATING_PROPERTY_DEFINITION') |
      pdr.related_property_definition.name = 'service characteristics') |
      NOT (SIZEOF (QUERY (soc <* QUERY (pdr <*
      USEDIN (sc.related_property_definition,
      'PLANT_SPATIAL_CONFIGURATION.' +
      'PROPERTY_DEFINITION_REPRESENTATION.DEFINITION') |
      pdr.used_representation.name =
      'service operating characteristics') |
      SIZEOF (QUERY (it <* soc.used_representation.items |
      (SIZEOF (TYPEOF (it) *
      ['PLANT_SPATIAL_CONFIGURATION.MEASURE_REPRESENTATION_ITEM',
      'PLANT_SPATIAL_CONFIGURATION.' +
      'THERMODYNAMIC_TEMPERATURE_MEASURE_WITH_UNIT']) = 2) AND
      (it.name = 'maximum temperature'))) <= 1)) = 1))) = 0);
WR19: (NOT (SIZEOF (QUERY (pdr <* USEDIN (SELF,
      'PLANT_SPATIAL_CONFIGURATION.' +
      'PROPERTY_DEFINITION_RELATIONSHIP.RELATING_PROPERTY_DEFINITION') |
      pdr.related_property_definition.name =
      'service characteristics')) >= 1)) OR
      (SIZEOF (QUERY (sc <* QUERY (pdr <* USEDIN (SELF,
      'PLANT_SPATIAL_CONFIGURATION.' +
      'PROPERTY_DEFINITION_RELATIONSHIP.RELATING_PROPERTY_DEFINITION') |
      pdr.related_property_definition.name = 'service characteristics') |
      NOT (SIZEOF (QUERY (soc <* QUERY (pdr <*
      USEDIN (sc.related_property_definition,
      'PLANT_SPATIAL_CONFIGURATION.' +
      'PROPERTY_DEFINITION_REPRESENTATION.DEFINITION') |
      pdr.used_representation.name =
      'service operating characteristics') |
      {1 <= SIZEOF (QUERY (it <* soc.used_representation.items |
      ('PLANT_SPATIAL_CONFIGURATION.MEASURE_REPRESENTATION_ITEM' IN
      TYPEOF (it)) AND
      (it.name IN ['pressure', 'minimum pressure',
      'maximum pressure']))) <= 2})) = 1))) = 0);
WR20: (NOT (SIZEOF (QUERY (pdr <* USEDIN (SELF,
      'PLANT_SPATIAL_CONFIGURATION.' +
      'PROPERTY_DEFINITION_RELATIONSHIP.RELATING_PROPERTY_DEFINITION') |
      pdr.related_property_definition.name =
      'service characteristics')) >= 1)) OR
      (SIZEOF (QUERY (sc <* QUERY (pdr <* USEDIN (SELF,
      'PLANT_SPATIAL_CONFIGURATION.' +
      'PROPERTY_DEFINITION_RELATIONSHIP.RELATING_PROPERTY_DEFINITION') |
      pdr.related_property_definition.name = 'service characteristics') |
      NOT (SIZEOF (QUERY (soc <* QUERY (pdr <*
      USEDIN (sc.related_property_definition,
      'PLANT_SPATIAL_CONFIGURATION.' +
      'PROPERTY_DEFINITION_REPRESENTATION.DEFINITION') |
      pdr.used_representation.name =
      'service operating characteristics') |
      SIZEOF (QUERY (it <* soc.used_representation.items |
      ('PLANT_SPATIAL_CONFIGURATION.MEASURE_REPRESENTATION_ITEM' IN
      TYPEOF (it)) AND
      (it.name = 'pressure'))) <= 1)) = 1))) = 0);
```


© ISO 2001 – All rights reserved

```
WR21: (NOT (SIZEOF (QUERY (pdr <* USEDIN (SELF,
      'PLANT_SPATIAL_CONFIGURATION.' +
      'PROPERTY_DEFINITION_RELATIONSHIP.RELATING_PROPERTY_DEFINITION') |
      pdr.related_property_definition.name =
      'service characteristics')) >= 1)) OR
      (SIZEOF (QUERY (sc <* QUERY (pdr <* USEDIN (SELF,
      'PLANT_SPATIAL_CONFIGURATION.' +
      'PROPERTY_DEFINITION_RELATIONSHIP.RELATING_PROPERTY_DEFINITION') |
      pdr.related_property_definition.name = 'service characteristics') |
      NOT (SIZEOF (QUERY (soc <* QUERY (pdr <*
      USEDIN (sc.related_property_definition,
      'PLANT_SPATIAL_CONFIGURATION.' +
      'PROPERTY_DEFINITION_REPRESENTATION.DEFINITION') |
      pdr.used_representation.name =
      'service operating characteristics') |
      SIZEOF (QUERY (it <* soc.used_representation.items |
      ('PLANT_SPATIAL_CONFIGURATION.MEASURE_REPRESENTATION_ITEM' IN
      TYPEOF (it)) AND
      (it.name = 'minimum pressure'))) <= 1)) = 1))) = 0);
WR22: (NOT (SIZEOF (QUERY (pdr <* USEDIN (SELF,
      'PLANT_SPATIAL_CONFIGURATION.' +
      'PROPERTY_DEFINITION_RELATIONSHIP.RELATING_PROPERTY_DEFINITION') |
      pdr.related_property_definition.name =
      'service characteristics')) >= 1)) OR
      (SIZEOF (QUERY (sc <* QUERY (pdr <* USEDIN (SELF,
      'PLANT_SPATIAL_CONFIGURATION.' +
      'PROPERTY_DEFINITION_RELATIONSHIP.RELATING_PROPERTY_DEFINITION') |
      pdr.related_property_definition.name = 'service characteristics') |
      NOT (SIZEOF (QUERY (soc <* QUERY (pdr <*
      USEDIN (sc.related_property_definition,
      'PLANT_SPATIAL_CONFIGURATION.' +
      'PROPERTY_DEFINITION_REPRESENTATION.DEFINITION') |
      pdr.used_representation.name =
      'service operating characteristics') |
      SIZEOF (QUERY (it <* soc.used_representation.items |
      ('PLANT_SPATIAL_CONFIGURATION.MEASURE_REPRESENTATION_ITEM' IN
      TYPEOF (it)) AND
      (it.name = 'maximum pressure'))) <= 1)) = 1))) = 0);
WR23: (NOT (SIZEOF (QUERY (pdr <* USEDIN (SELF,
      'PLANT_SPATIAL_CONFIGURATION.' +
      'PROPERTY_DEFINITION_RELATIONSHIP.RELATING_PROPERTY_DEFINITION') |
      pdr.related_property_definition.name =
      'service characteristics')) >= 1)) OR
      (SIZEOF (QUERY (sc <* QUERY (pdr <* USEDIN (SELF,
      'PLANT_SPATIAL_CONFIGURATION.' +
      'PROPERTY_DEFINITION_RELATIONSHIP.RELATING_PROPERTY_DEFINITION') |
      pdr.related_property_definition.name = 'service characteristics') |
      NOT (SIZEOF (QUERY (soc <* QUERY (pdr <*
      USEDIN (sc.related_property_definition,
      'PLANT_SPATIAL_CONFIGURATION.' +
      'PROPERTY_DEFINITION_REPRESENTATION.DEFINITION') |
      pdr.used_representation.name =
      'service operating characteristics') |
      {1 <= SIZEOF (QUERY (it <* soc.used_representation.items |
      (SIZEOF (TYPEOF (it) *
      ['PLANT_SPATIAL_CONFIGURATION.MEASURE_REPRESENTATION_ITEM',
      'PLANT_SPATIAL_CONFIGURATION.TIME_MEASURE_WITH_UNIT']) = 2) AND
      (it.name IN ['duration', 'minimum duration',
      'maximum duration']))) <= 2})) = 1))) = 0);
WR24: (NOT (SIZEOF (QUERY (pdr <* USEDIN (SELF,
      'PLANT_SPATIAL_CONFIGURATION.' +
      'PROPERTY_DEFINITION_RELATIONSHIP.RELATING_PROPERTY_DEFINITION') |
      pdr.related_property_definition.name =
      'service characteristics')) >= 1)) OR
      (SIZEOF (QUERY (sc <* QUERY (pdr <* USEDIN (SELF,
      'PLANT_SPATIAL_CONFIGURATION.' +
      'PROPERTY_DEFINITION_RELATIONSHIP.RELATING_PROPERTY_DEFINITION') |
      pdr.related_property_definition.name = 'service characteristics') |
      NOT (SIZEOF (QUERY (soc <* QUERY (pdr <*
      USEDIN (sc.related_property_definition,
```


© ISO 2001 – All rights reserved

```
       'PLANT_SPATIAL_CONFIGURATION.' +
       'PROPERTY_DEFINITION_REPRESENTATION.DEFINITION') |
       pdr.used_representation.name =
       'service operating characteristics') |
       SIZEOF (QUERY (it <* soc.used_representation.items |
       (SIZEOF (TYPEOF (it) *
       ['PLANT_SPATIAL_CONFIGURATION.MEASURE_REPRESENTATION_ITEM',
       'PLANT_SPATIAL_CONFIGURATION.TIME_MEASURE_WITH_UNIT']) = 2) AND
       (it.name = 'duration'))) <= 1)) = 1))) = 0);
 WR25: (NOT (SIZEOF (QUERY (pdr <* USEDIN (SELF,
       'PLANT_SPATIAL_CONFIGURATION.' +
       'PROPERTY_DEFINITION_RELATIONSHIP.RELATING_PROPERTY_DEFINITION') |
       pdr.related_property_definition.name =
       'service characteristics')) >= 1)) OR
       (SIZEOF (QUERY (sc <* QUERY (pdr <* USEDIN (SELF,
       'PLANT_SPATIAL_CONFIGURATION.' +
       'PROPERTY_DEFINITION_RELATIONSHIP.RELATING_PROPERTY_DEFINITION') |
       pdr.related_property_definition.name = 'service characteristics') |
       NOT (SIZEOF (QUERY (soc <* QUERY (pdr <*
       USEDIN (sc.related_property_definition,
       'PLANT_SPATIAL_CONFIGURATION.' +
       'PROPERTY_DEFINITION_REPRESENTATION.DEFINITION') |
       pdr.used_representation.name =
       'service operating characteristics') |
       SIZEOF (QUERY (it <* soc.used_representation.items |
       (SIZEOF (TYPEOF (it) *
       ['PLANT_SPATIAL_CONFIGURATION.MEASURE_REPRESENTATION_ITEM',
       'PLANT_SPATIAL_CONFIGURATION.TIME_MEASURE_WITH_UNIT']) = 2) AND
       (it.name = 'minimum duration'))) <= 1)) = 1))) = 0);
 WR26: (NOT (SIZEOF (QUERY (pdr <* USEDIN (SELF,
       'PLANT_SPATIAL_CONFIGURATION.' +
       'PROPERTY_DEFINITION_RELATIONSHIP.RELATING_PROPERTY_DEFINITION') |
       pdr.related_property_definition.name =
       'service characteristics')) >= 1)) OR
       (SIZEOF (QUERY (sc <* QUERY (pdr <* USEDIN (SELF,
       'PLANT_SPATIAL_CONFIGURATION.' +
       'PROPERTY_DEFINITION_RELATIONSHIP.RELATING_PROPERTY_DEFINITION') |
       pdr.related_property_definition.name = 'service characteristics') |
       NOT (SIZEOF (QUERY (soc <* QUERY (pdr <*
       USEDIN (sc.related_property_definition,
       'PLANT_SPATIAL_CONFIGURATION.' +
       'PROPERTY_DEFINITION_REPRESENTATION.DEFINITION') |
       pdr.used_representation.name =
       'service operating characteristics') |
       SIZEOF (QUERY (it <* soc.used_representation.items |
       (SIZEOF (TYPEOF (it) *
       ['PLANT_SPATIAL_CONFIGURATION.MEASURE_REPRESENTATION_ITEM',
       'PLANT_SPATIAL_CONFIGURATION.TIME_MEASURE_WITH_UNIT']) = 2) AND
       (it.name = 'maximum duration'))) <= 1)) = 1))) = 0);
 WR27: (NOT (SIZEOF (QUERY (pdr <* USEDIN (SELF,
       'PLANT_SPATIAL_CONFIGURATION.' +
       'PROPERTY_DEFINITION_RELATIONSHIP.RELATING_PROPERTY_DEFINITION') |
       pdr.related_property_definition.name =
       'service characteristics')) >= 1)) OR
       (SIZEOF (QUERY (sc <* QUERY (pdr <* USEDIN (SELF,
       'PLANT_SPATIAL_CONFIGURATION.' +
       'PROPERTY_DEFINITION_RELATIONSHIP.RELATING_PROPERTY_DEFINITION') |
       pdr.related_property_definition.name = 'service characteristics') |
       NOT ('PLANT_SPATIAL_CONFIGURATION.PLANT_ITEM_CONNECTOR' IN
       TYPEOF (sc.related_property_definition.definition)))) = 0);
END_ENTITY;
(*
```

Formal propositions:

WR1: A **stream_design_case** shall have at least one **stream_phase**.

WR2: A **stream_design_case** shall have exactly one representation with the **name** of ‘stream flow

© ISO 2001 – All rights reserved

characteristics'.

WR3: The representation of the **stream_design_case** with the **name** of 'stream flow characteristics' shall have at least two **representation_item**s.

WR4: The representation of the **stream_design_case** with the **name** of 'stream flow characteristics' shall have between one and two **representation_item**s that are of type **measure_representation_item** with a name of 'flow rate', 'maximum flow rate', or 'minimum flow rate'.

WR5: The representation of the **stream_design_case** with the **name** of 'stream flow characteristics' shall have at most one **representation_item** that is of type **measure_representation_item** with a name of 'flow rate'.

WR6: The representation of the **stream_design_case** with the **name** of 'stream flow characteristics' shall have at most one **representation_item** that is of type **measure_representation_item** with a name of 'minimum flow rate'.

WR7: The representation of the **stream_design_case** with the **name** of 'stream flow characteristics' shall have at most one **representation_item** that is of type **measure_representation_item** with a name of 'maximum flow rate'.

WR8: The representation of the **stream_design_case** with the **name** of 'stream flow characteristics' shall have between one and two **representation_item**s that are of type **measure_representation_item** with a name of 'pressure', 'maximum pressure', or 'minimum pressure'.

WR9: The representation of the **stream_design_case** with the **name** of 'stream flow characteristics' shall have at most one **representation_item** that is of type **measure_representation_item** with a name of 'pressure'.

WR10: The representation of the **stream_design_case** with the **name** of 'stream flow characteristics' shall have at most one **representation_item** that is of type **measure_representation_item** with a name of 'minimum pressure'.

WR11: The representation of the **stream_design_case** with the **name** of 'stream flow characteristics' shall have at most one **representation_item** that is of type **measure_representation_item** with a name of 'maximum pressure'.

WR12: The representation of the **stream_design_case** with the **name** of 'stream flow characteristics' shall have at most one **representation_item** that is of type **descriptive_representation_item** with a name of 'stream reference data'.

WR13: If the **stream_design_case** relates to a **property_definition** with a **name** of 'service characteristics', the **property_definition** that is related with a **name** of 'service characteristics' shall have exactly one **representation** with the **name** of 'stream operating characteristics'.

WR14: If the **stream_design_case** relates to a **property_definition** with a **name** of 'service characteristics', the **representation** with the **name** of 'stream operating characteristics' of that **property_-definition** shall have at least three **representation_item**s.

WR15: If the **stream_design_case** relates to a **property_definition** with a **name** of 'service characteristics', the **representation** with the **name** of 'stream operating characteristics' of that **property_-definition** shall have one or two **representation_item**s of type **measure_representation_item** and **thermodynamic_temperature_measure_with_unit** with a **name** of 'temperature', 'minimum

© ISO 2001 – All rights reserved

temperature', or 'maximum temperature'.

WR16: If the **stream_design_case** relates to a **property_definition** with a **name** of 'services characteristics', the **representation** with the **name** of 'stream operating characteristics' of that **property_-definition** shall have at most one **representation_item** of type **measure_representation_item** and **thermodynamic_temperature_measure_with_unit** with a **name** of 'temperature'.

WR17: If the **stream_design_case** relates to a **property_definition** with a **name** of 'service characteristics', the **representation** with the **name** of 'stream operating characteristics' of that **property_-definition** shall have at most one **representation_item** of type **measure_representation_item** and **thermodynamic_temperature_measure_with_unit** with a **name** of 'minimum temperature'.

WR18: If the **stream_design_case** relates to a **property_definition** with a **name** of 'service characteristics', the **representation** with the **name** of 'stream operating characteristics' of that **property_-definition** shall have at most one **representation_item** of type **measure_representation_item** and **thermodynamic_temperature_measure_with_unit** with a **name** of 'maximum temperature'.

WR19: If the **stream_design_case** relates to a **property_definition** with a **name** of 'service characteristics', the **representation** with the **name** of 'stream operating characteristics' of that **property_-definition** shall have one or two **representation_item**s of type **measure_representation_item** with a **name** of 'pressure', 'minimum pressure', or 'maximum pressure'.

WR20: If the **stream_design_case** relates to a **property_definition** with a **name** of 'service characteristics', the **representation** with the **name** of 'stream operating characteristics' of that **property_-definition** shall have at most one **representation_item** of type **measure_representation_item** with a **name** of 'pressure'.

WR21: If the **stream_design_case** relates to a **property_definition** with a **name** of 'service characteristics', the **representation** with the **name** of 'stream operating characteristics' of that **property_-definition** shall have at most one **representation_item** of type **measure_representation_item** with a **name** of 'minimum pressure'.

WR22: If the **stream_design_case** relates to a **property_definition** with a **name** of 'service characteristics', the **representation** with the **name** of 'stream operating characteristics' of that **property_-definition** shall have at most one **representation_item** of type **measure_representation_item** with a **name** of 'maximum pressure'.

WR23: If the **stream_design_case** relates to a **property_definition** with a **name** of 'service characteristics', the **representation** with the **name** of 'stream operating characteristics' of that **property_-definition** shall have one or two **representation_item**s of type **measure_representation_item** and **time_measure_with_unit** with a **name** of 'duration', 'minimum duration', or 'maximum duration'.

WR24: If the **stream_design_case** relates to a **property_definition** with a **name** of 'service characteristics', the **representation** with the **name** of 'stream operating characteristics' of that **property_-definition** shall have at most one **representation_item** of type **measure_representation_item** and **time_measure_with_unit** with a **name** of 'duration'.

WR25: If the **stream_design_case** relates to a **property_definition** with a **name** of 'service characteristics', the **representation** with the **name** of 'stream operating characteristics' of that **property_-definition** shall have at most one **representation_item** of type **measure_representation_item** and **time_measure_with_unit** with a **name** of 'minimum duration'.

WR26: If the **stream_design_case** relates to a **property_definition** with a **name** of 'service characteristics', the **representation** with the **name** of 'stream operating characteristics' of that

© ISO 2001 – All rights reserved

property_definition shall have at most one **representation_item** of type **measure_representation_item** and **time_measure_with_unit** with a **name** of 'maximum duration'.

WR27: If the **stream_design_case** relates to a **property_definition** with a **name** of 'service characteristics', that **property_definition** shall be a property of a **plant_item_connector**.

Associated global rule:

The following global rule defined in this part of ISO 10303 applies to the **stream_design_case** entity:

- **subtype_exclusive_characterized_object** (see 5.2.4.15)

5.2.3.1.104 stream_phase

A **stream_phase** is a type of **property_definition** that identifies the characteristics of a gas, liquid, vapour, or particulate phase.

EXPRESS specification:

```
*)
ENTITY stream_phase
  SUBTYPE OF (property_definition);
WHERE
  WR1: 'PLANT_SPATIAL_CONFIGURATION.STREAM_DESIGN_CASE' IN
       TYPEOF (SELF.DEFINITION);
  WR2: SIZEOF (QUERY (pdr <* USEDIN (SELF, 'PLANT_SPATIAL_CONFIGURATION.' +
       'PROPERTY_DEFINITION_REPRESENTATION.DEFINITION') |
       pdr.used_representation.name = 'stream phase characteristics')) = 1;
  WR3: SIZEOF (QUERY (spc <* QUERY (pdr <* USEDIN (SELF,
       'PLANT_SPATIAL_CONFIGURATION.' +
       'PROPERTY_DEFINITION_REPRESENTATION.DEFINITION') |
       pdr.used_representation.name = 'stream phase characteristics') |
       NOT (SIZEOF (spc.used_representation.items) >= 5))) = 0;
  WR4: SIZEOF (QUERY (spc <* QUERY (pdr <* USEDIN (SELF,
       'PLANT_SPATIAL_CONFIGURATION.' +
       'PROPERTY_DEFINITION_REPRESENTATION.DEFINITION') |
       pdr.used_representation.name = 'stream phase characteristics') |
       NOT (SIZEOF (QUERY (it <* spc.used_representation.items |
       (SIZEOF (TYPEOF (it) *
       ['PLANT_SPATIAL_CONFIGURATION.MEASURE_REPRESENTATION_ITEM',
       'PLANT_SPATIAL_CONFIGURATION.RATIO_MEASURE_WITH_UNIT']) = 2) AND
       (it.name = 'constituent mole fraction'))) = 1))) = 0;
  WR5: SIZEOF (QUERY (spc <* QUERY (pdr <* USEDIN (SELF,
       'PLANT_SPATIAL_CONFIGURATION.' +
       'PROPERTY_DEFINITION_REPRESENTATION.DEFINITION') |
       pdr.used_representation.name = 'stream phase characteristics') |
       NOT (SIZEOF (QUERY (it <* spc.used_representation.items |
       ('PLANT_SPATIAL_CONFIGURATION.DESCRIPTIVE_REPRESENTATION_ITEM' IN
       TYPEOF (it)) AND
       (it.name = 'constituents'))) = 1))) = 0;
  WR6: SIZEOF (QUERY (spc <* QUERY (pdr <* USEDIN (SELF,
       'PLANT_SPATIAL_CONFIGURATION.' +
       'PROPERTY_DEFINITION_REPRESENTATION.DEFINITION') |
       pdr.used_representation.name = 'stream phase characteristics') |
       NOT (SIZEOF (QUERY (it <* spc.used_representation.items |
       ('PLANT_SPATIAL_CONFIGURATION.MEASURE_REPRESENTATION_ITEM' IN
       TYPEOF (it)) AND
       (it.name = 'phase density'))) = 1))) = 0;
  WR7: SIZEOF (QUERY (spc <* QUERY (pdr <* USEDIN (SELF,
       'PLANT_SPATIAL_CONFIGURATION.' +
       'PROPERTY_DEFINITION_REPRESENTATION.DEFINITION') |
       pdr.used_representation.name = 'stream phase characteristics') |
       NOT (SIZEOF (QUERY (it <* spc.used_representation.items |
       (SIZEOF (TYPEOF (it) *
```


© ISO 2001 – All rights reserved

```
        ['PLANT_SPATIAL_CONFIGURATION.MEASURE_REPRESENTATION_ITEM',
        'PLANT_SPATIAL_CONFIGURATION.RATIO_MEASURE_WITH_UNIT']) = 2) AND
        (it.name = 'phase fraction'))) = 1))) = 0;
  WR8: SIZEOF (QUERY (spc <* QUERY (pdr <* USEDIN (SELF,
        'PLANT_SPATIAL_CONFIGURATION.' +
        'PROPERTY_DEFINITION_REPRESENTATION.DEFINITION') |
        pdr.used_representation.name = 'stream phase characteristics') |
        NOT ({1 <= SIZEOF (QUERY (it <* spc.used_representation.items |
        (SIZEOF (TYPEOF (it) *
        ['PLANT_SPATIAL_CONFIGURATION.MEASURE_REPRESENTATION_ITEM',
        'PLANT_SPATIAL_CONFIGURATION.' +
        'THERMODYNAMIC_TEMPERATURE_MEASURE_WITH_UNIT']) = 2) AND
        (it.name IN ['temperature', 'minimum temperature',
        'maximum temperature']))) <= 2}))) = 0;
  WR9: SIZEOF (QUERY (spc <* QUERY (pdr <* USEDIN (SELF,
        'PLANT_SPATIAL_CONFIGURATION.' +
        'PROPERTY_DEFINITION_REPRESENTATION.DEFINITION') |
        pdr.used_representation.name = 'stream phase characteristics') |
        NOT (SIZEOF (QUERY (it <* spc.used_representation.items |
        (SIZEOF (TYPEOF (it) *
        ['PLANT_SPATIAL_CONFIGURATION.MEASURE_REPRESENTATION_ITEM',
        'PLANT_SPATIAL_CONFIGURATION.' +
        'THERMODYNAMIC_TEMPERATURE_MEASURE_WITH_UNIT']) = 2) AND
        (it.name = 'temperature'))) <= 1))) = 0;
 WR10: SIZEOF (QUERY (spc <* QUERY (pdr <* USEDIN (SELF,
        'PLANT_SPATIAL_CONFIGURATION.' +
        'PROPERTY_DEFINITION_REPRESENTATION.DEFINITION') |
        pdr.used_representation.name = 'stream phase characteristics') |
        NOT (SIZEOF (QUERY (it <* spc.used_representation.items |
        (SIZEOF (TYPEOF (it) *
        ['PLANT_SPATIAL_CONFIGURATION.MEASURE_REPRESENTATION_ITEM',
        'PLANT_SPATIAL_CONFIGURATION.' +
        'THERMODYNAMIC_TEMPERATURE_MEASURE_WITH_UNIT']) = 2) AND
        (it.name = 'minimum temperature'))) <= 1))) = 0;
 WR11: SIZEOF (QUERY (spc <* QUERY (pdr <* USEDIN (SELF,
        'PLANT_SPATIAL_CONFIGURATION.' +
        'PROPERTY_DEFINITION_REPRESENTATION.DEFINITION') |
        pdr.used_representation.name = 'stream phase characteristics') |
        NOT (SIZEOF (QUERY (it <* spc.used_representation.items |
        (SIZEOF (TYPEOF (it) *
        ['PLANT_SPATIAL_CONFIGURATION.MEASURE_REPRESENTATION_ITEM',
        'PLANT_SPATIAL_CONFIGURATION.' +
        'THERMODYNAMIC_TEMPERATURE_MEASURE_WITH_UNIT']) = 2) AND
        (it.name = 'maximum temperature'))) <= 1))) = 0;
 WR12: SIZEOF (QUERY (spc <* QUERY (pdr <* USEDIN (SELF,
        'PLANT_SPATIAL_CONFIGURATION.' +
        'PROPERTY_DEFINITION_REPRESENTATION.DEFINITION') |
        pdr.used_representation.name = 'stream phase characteristics') |
        NOT (SIZEOF (QUERY (it <* spc.used_representation.items |
        ('PLANT_SPATIAL_CONFIGURATION.MEASURE_REPRESENTATION_ITEM' IN
        TYPEOF (it)) AND
        (it.name = 'specific gravity'))) <= 1))) = 0;
 WR13: SIZEOF (QUERY (spc <* QUERY (pdr <* USEDIN (SELF,
        'PLANT_SPATIAL_CONFIGURATION.' +
        'PROPERTY_DEFINITION_REPRESENTATION.DEFINITION') |
        pdr.used_representation.name = 'stream phase characteristics') |
        NOT (SIZEOF (QUERY (it <* spc.used_representation.items |
        ('PLANT_SPATIAL_CONFIGURATION.MEASURE_REPRESENTATION_ITEM' IN
        TYPEOF (it)) AND
        (it.name = 'surface tension'))) <= 1))) = 0;
 WR14: SIZEOF (QUERY (spc <* QUERY (pdr <* USEDIN (SELF,
        'PLANT_SPATIAL_CONFIGURATION.' +
        'PROPERTY_DEFINITION_REPRESENTATION.DEFINITION') |
        pdr.used_representation.name = 'stream phase characteristics') |
        NOT (SIZEOF (QUERY (it <* spc.used_representation.items |
        ('PLANT_SPATIAL_CONFIGURATION.MEASURE_REPRESENTATION_ITEM' IN
        TYPEOF (it)) AND
        (it.name = 'viscosity'))) <= 1))) = 0;
END_ENTITY;
(*
```


© ISO 2001 – All rights reserved

Formal propositions:

WR1: A **stream_phase** shall define a property of a **stream_design_case**.

WR2: A **stream_phase** shall have exactly one **representation** with the name of 'stream phase characteristics'.

WR3: The representation of the **stream_phase** with the name of 'stream phase characteristics' shall have at least five **representation_item**s.

WR4: The representation of the **stream_phase** with the name of 'stream phase characteristics' shall have exactly one **representation_item** that is of type **measure_representation_item** and **ratio_measure_-with_unit** with a name of 'constituent mole fraction'.

WR5: The representation of the **stream_phase** with the name of 'stream phase characteristics' shall have exactly one **representation_item** that is of type **descriptive_representation_item** with a name of 'constituents'.

WR6: The representation of the **stream_phase** with the name of 'stream phase characteristics' shall have exactly one **representation_item** that is of type **measure_representation_item** with a name of 'phase density'.

WR7: The representation of the **stream_phase** with the name of 'stream phase characteristics' shall have exactly one **representation_item** that is of type **measure_representation_item** and **ratio_measure_-with_unit** with a name of 'phase fraction'.

WR8: The representation of the **stream_phase** with the name of 'stream phase characteristics' shall have one or two **representation_item**s of type **measure_representation_item** and **thermodynamic_-temperature_measure_with_unit** with a **name** of 'temperature', 'minimum temperature', or 'maximum temperature'.

WR9: The representation of the **stream_phase** with the name of 'stream phase characteristics' shall have at most one **representation_item** of type **measure_representation_item** and **thermodynamic_-temperature_measure_with_unit** with a **name** of 'temperature'.

WR10: The representation of the **stream_phase** with the name of 'stream phase characteristics' shall have at most one **representation_item** of type **measure_representation_item** and **thermodynamic_-temperature_measure_with_unit** with a **name** of 'minimum temperature'.

WR11: The representation of the **stream_phase** with the name of 'stream phase characteristics' shall have at most one **representation_item** of type **measure_representation_item** and **thermodynamic_-temperature_measure_with_unit** with a **name** of 'maximum temperature'.

WR12: The representation of the **stream_phase** with the name of 'stream phase characteristics' shall have at most one **representation_item** that is of type **measure_representation_item** with a name of 'specific gravity'.

WR13: The representation of the **stream_phase** with the name of 'stream phase characteristics' shall have at most one **representation_item** that is of type **measure_representation_item** with a name of 'surface tension'.

WR14: The representation of the **stream_phase** with the name of 'stream phase characteristics' shall have at most one **representation_item** that is of type **measure_representation_item** with a name of

© ISO 2001 – All rights reserved

'viscosity'.

5.2.3.1.105 structural_load_connector_class

A **structural_load_connector_class** is a type of **group** that classifies the items that are assigned to it as being structural load connectors. The **name** of the **structural_connector_class** further classifies the assigned items.

EXPRESS specification:

```
*)
ENTITY structural_load_connector_class
  SUBTYPE OF (group);
END_ENTITY;
(*
```

5.2.3.1.106 structural_system

A **structural_system** is a type of **product_definition** that identifies a system or assembly of structural components.

EXPRESS specification:

```
*)
ENTITY structural_system
  SUBTYPE OF (product_definition);
WHERE
  WR1: SIZEOF (QUERY (pdr <* USEDIN (SELF, 'PLANT_SPATIAL_CONFIGURATION.' +
       'PRODUCT_DEFINITION_RELATIONSHIP.RELATED_PRODUCT_DEFINITION') |
       ('PLANT_SPATIAL_CONFIGURATION.PLANT' IN TYPEOF
       (pdr.relating_product_definition.formation.of_product)) AND
       (pdr.relating_product_definition.frame_of_reference.name =
       'functional occurrence'))) = 1;
END_ENTITY;
(*
```

Formal propositions:

WR1: The **structural_system** shall be related to exactly one **product_definition** that is the definition of a plant and has a context of 'functional occurrence'.

5.2.3.1.107 support_constraint_representation

A **support_constraint_representation** is a type of **representation** that identifies limitations on the movement of a plant item.

EXPRESS specification:

```
*)
ENTITY support_constraint_representation
  SUBTYPE OF (representation);
WHERE
  WR1: SIZEOF (SELF.items) >= 3;
  WR2: SIZEOF (QUERY (it <* SELF.items |
       ('PLANT_SPATIAL_CONFIGURATION.MEASURE_REPRESENTATION_ITEM'
       IN TYPEOF (it)) AND
       (it.name IN ['negative x', 'positive x', 'negative y',
       'positive y', 'negative z', 'positive z',
       'negative x rotation', 'positive x rotation',
       'negative y rotation', 'positive y rotation',
```


© ISO 2001 – All rights reserved

```
       'negative z rotation', 'positive z rotation'] ))) = 1;
  WR3: SIZEOF (QUERY (it <* SELF.items |
       'PLANT_SPATIAL_CONFIGURATION.RATIO_MEASURE_WITH_UNIT'
       IN TYPEOF (it))) = 1;
  WR4: SIZEOF (QUERY (it <* SELF.items |
       'PLANT_SPATIAL_CONFIGURATION.DESCRIPTIVE_REPRESENTATION_ITEM'
       IN TYPEOF (it))) = 1;
END_ENTITY;
(*
```

Formal propositions:

WR1: The **support_constraint_representation** shall contain at least three items.

WR2: The **support_constraint_representation** shall contain **measure_representation_item**s that have a name of ‘negative x’, ‘positive x’, ‘negative y’, ‘positive y’, ‘negative z’, ‘positive z’, ‘negative x rotation’, ‘positive x rotation’, ‘negative y rotation’, ‘positive y rotation’, ‘negative z rotation’, or ‘positive z rotation’.

WR3: The **support_constraint_representation** shall contain exactly one **ratio_measure_with_unit**.

WR4: The **support_constraint_representation** shall contain exactly one **descriptive_representation_-item**.

5.2.3.1.108 swage_fitting_class

A **swage_fitting_class** is a type of **group** that classifies the items that are assigned to it as swage fittings.

EXPRESS specification:

```
*)
ENTITY swage_fitting_class
  SUBTYPE OF (group);
WHERE
  WR1: SIZEOF (QUERY (aca <* QUERY (ca <* USEDIN (SELF,
       'PLANT_SPATIAL_CONFIGURATION.CLASSIFICATION_ASSIGNMENT.' +
       'ASSIGNED_CLASS') |
       'PLANT_SPATIAL_CONFIGURATION.APPLIED_CLASSIFICATION_ASSIGNMENT' IN
       TYPEOF (ca)) |
       NOT (SIZEOF (QUERY (it <* aca.items |
       NOT ('PLANT_SPATIAL_CONFIGURATION.PIPING_COMPONENT_DEFINITION' IN
       TYPEOF (it)))) = 0))) = 0;
  WR2: SIZEOF (QUERY (aca <* QUERY (ca <* USEDIN (SELF,
       'PLANT_SPATIAL_CONFIGURATION.CLASSIFICATION_ASSIGNMENT.' +
       'ASSIGNED_CLASS') |
       'PLANT_SPATIAL_CONFIGURATION.APPLIED_CLASSIFICATION_ASSIGNMENT' IN
       TYPEOF (ca)) |
       NOT (SIZEOF (QUERY (pcd <* QUERY (it <* aca.items |
       'PLANT_SPATIAL_CONFIGURATION.PIPING_COMPONENT_DEFINITION' IN
       TYPEOF (it)) |
       NOT (SIZEOF (QUERY (aca1 <* USEDIN (pcd.formation.of_product,
       'PLANT_SPATIAL_CONFIGURATION.' +
       'APPLIED_CLASSIFICATION_ASSIGNMENT.ITEMS') |
       class_in_tree (aca.assigned_class, 'swage')))
       = 1))) = 0))) = 0;
END_ENTITY;
(*
```

Formal propositions:

WR1: A **swage_fitting_class** shall classify items of type **piping_component_definition**.

© ISO 2001 – All rights reserved

WR2: A **swage_fitting_class** shall classify items of type **piping_component_definition** that are a definition of a **product** that is categorized as a 'swage'.

5.2.3.1.109 system_class

A **system_class** is a type of **group** that classifies items that are assigned to it as systems. The name of the **system_class** may further classify the assigned item.

EXPRESS specification:

```
*)
ENTITY system_class
  SUBTYPE OF (group);
WHERE
  WR1: SIZEOF (QUERY (aca <* QUERY (ca <* USEDIN (SELF,
       'PLANT_SPATIAL_CONFIGURATION.CLASSIFICATION_ASSIGNMENT.' +
       'ASSIGNED_CLASS') |
       'PLANT_SPATIAL_CONFIGURATION.APPLIED_CLASSIFICATION_ASSIGNMENT' IN
       TYPEOF (ca)) |
       NOT (SIZEOF (QUERY (it <* aca.items |
       NOT (SIZEOF (TYPEOF (it) *
       ['PLANT_SPATIAL_CONFIGURATION.CABLEWAY_SYSTEM',
       'PLANT_SPATIAL_CONFIGURATION.DUCTING_SYSTEM',
       'PLANT_SPATIAL_CONFIGURATION.ELECTRICAL_SYSTEM',
       'PLANT_SPATIAL_CONFIGURATION.INSTRUMENTATION_AND_CONTROL_SYSTEM',
       'PLANT_SPATIAL_CONFIGURATION.PIPING_SYSTEM',
       'PLANT_SPATIAL_CONFIGURATION.STRUCTURAL_SYSTEM']) = 1)
       )) = 0))) = 0;
END_ENTITY;
(*
```

Formal propositions:

WR1: A **system_class** shall classify items of type **cableway_system**, **ducting_system**, **electrical_-system**, **instrumentation_and_control_system**, **piping_system**, and **structural_system**.

5.2.3.1.110 system_space

A **system_space** is a type of **product_definition_shape** that identifies the shape of the space allocated for an **electrical_system**, **ducting_system**, **instrumentation_and_control_system**, **piping_system**, or **structural_system**.

EXPRESS specification:

```
*)
ENTITY system_space
  SUBTYPE OF (product_definition_shape);
WHERE
  WR1: SIZEOF (TYPEOF (SELF.definition) *
       ['PLANT_SPATIAL_CONFIGURATION.ELECTRICAL_SYSTEM',
       'PLANT_SPATIAL_CONFIGURATION.DUCTING_SYSTEM',
       'PLANT_SPATIAL_CONFIGURATION.' +
       'INSTRUMENTATION_AND_CONTROL_SYSTEM',
       'PLANT_SPATIAL_CONFIGURATION.PIPING_SYSTEM',
       'PLANT_SPATIAL_CONFIGURATION.STRUCTURAL_SYSTEM']) = 1;
END_ENTITY;
(*
```

Formal propositions:

WR1: A **system_space** shall define the shape of the space allocation for an **electrical_system**, **ducting_-**

© ISO 2001 – All rights reserved

system, **instrumentation_and_control_system**, **piping_system**, or **structural_system**.

5.2.3.1.111 valve_class

A **valve_class** is a type of **group** that classifies the items are assigned to it as valves. The name of the **valve_class** may further classify the assigned items.

EXPRESS specification:

```
*)
ENTITY valve_class
  SUBTYPE OF (group);
WHERE
  WR1: SIZEOF (QUERY (aca <* QUERY (ca <* USEDIN (SELF,
       'PLANT_SPATIAL_CONFIGURATION.CLASSIFICATION_ASSIGNMENT.' +
       'ASSIGNED_CLASS') |
       'PLANT_SPATIAL_CONFIGURATION.APPLIED_CLASSIFICATION_ASSIGNMENT' IN
       TYPEOF (ca)) |
       NOT (SIZEOF (QUERY (it <* aca.items |
       NOT ('PLANT_SPATIAL_CONFIGURATION.PIPING_COMPONENT_DEFINITION' IN
       TYPEOF (it)))) = 0))) = 0;
  WR2: SIZEOF (QUERY (aca <* QUERY (ca <* USEDIN (SELF,
       'PLANT_SPATIAL_CONFIGURATION.CLASSIFICATION_ASSIGNMENT.' +
       'ASSIGNED_CLASS') |
       'PLANT_SPATIAL_CONFIGURATION.APPLIED_CLASSIFICATION_ASSIGNMENT' IN
       TYPEOF (ca)) |
       NOT (SIZEOF (QUERY (pcd <* QUERY (it <* aca.items |
       'PLANT_SPATIAL_CONFIGURATION.PIPING_COMPONENT_DEFINITION' IN
       TYPEOF (it)) |
       NOT (SIZEOF (QUERY (aca1 <* USEDIN (pcd.formation.of_product,
       'PLANT_SPATIAL_CONFIGURATION.' +
       'APPLIED_CLASSIFICATION_ASSIGNMENT.ITEMS') |
       class_in_tree (aca1.assigned_class, 'valve')))
       = 1))) = 0))) = 0;
END_ENTITY;
(*
```

Formal propositions:

WR1: A **valve_class** shall classify items of type **piping_component_definition**.

WR2: A **valve_class** shall classify items of type **piping_component_definition** that are a definition of a **product** that is categorized as a ‘valve’.

5.2.3.2 Plant spatial configuration imported entity modifications

5.2.3.2.1 action_request_status

The base definition of the **action_request_status** entity is given in ISO 10303-41. The following modifications apply to this part of ISO 10303.

Associated global rule:

The following global rule defined in this part of ISO 10303 applies to the **action_request_status** entity:

- **change_life_cycle_stage_usage_requires_stage** (see 5.2.4.8).

© ISO 2001 – All rights reserved

5.2.3.2.2 application_context

The base definition of the **application_context** entity is given in ISO 10303-41. The following modifications apply to this part of ISO 10303.

Associated global rules:

The following global rules defined in this part of ISO 10303 apply to the **application_context** entity:

- **application_context_requires_ap_definition** (see 5.2.4.1);
- **dependent_instantiable_application_context** (see 5.2.4.9).

5.2.3.2.3 application_protocol_definition

The base definition of the **application_protocol_definition** entity is given in ISO 10303-41. The following modifications apply to this part of ISO 10303.

Associated global rule:

The following global rule defined in this part of ISO 10303 applies to the **application_protocol_-definition** entity:

- **application_context_requires_ap_definition** (see 5.2.4.1).

5.2.3.2.4 approval

The base definition of the **approval** entity is given in ISO 10303-41. The following modifications apply to this part of ISO 10303.

Associated global rules:

The following global rules defined in this part of ISO 10303 apply to the **approval** entity:

- **approval_requires_approval_date_time** (see 5.2.4.2);
- **approval_requires_approval_person_organization** (see 5.2.4.3).

5.2.3.2.5 approval_date_time

The base definition of the **approval_date_time** entity is given in ISO 10303-41. The following modifications apply to this part of ISO 10303.

Associated global rule:

The following global rule defined in this part of ISO 10303 applies to the **approval_date_time** entity:

- **approval_requires_approval_date_time** (see 5.2.4.2).

5.2.3.2.6 approval_person_organization

The base definition of the **approval_person_organization** entity is given in ISO 10303-41. The

© ISO 2001 – All rights reserved

following modifications apply to this part of ISO 10303.

Associated global rule:

The following global rule defined in this part of ISO 10303 applies to the **approval_person_-organization** entity:

- **approval_requires_approval_person_organization** (see 5.2.4.3).

5.2.3.2.7 description_attribute

The base definition of the **description_attribute** entity is given in ISO 10303-41. The following modifications apply to this part of ISO 10303.

Associated global rule:

The following global rule defined in this part of ISO 10303 applies to the **description_attribute** entity:

- **version2_p41_uninstantiable_basic_attributes** (see 5.2.4.21).

5.2.3.2.8 externally_defined_item

The base definition of the **externally_defined_item** entity is given in ISO 10303-41. The following modifications apply to this part of ISO 10303.

Associated global rule:

The following global rule defined in this part of ISO 10303 applies to the **externally_defined_item** entity:

- **subtype_mandatory_externally_defined_item** (see 5.2.4.16).

5.2.3.2.9 id_attribute

The base definition of the **description_attribute** entity is given in ISO 10303-41. The following modifications apply to this part of ISO 10303.

Associated global rule:

The following global rule defined in this part of ISO 10303 applies to the **id_attribute** entity:

- **version2_p41_uninstantiable_basic_attributes** (see 5.2.4.21).

5.2.3.2.10 name_attribute

The base definition of the **name_attribute** entity is given in ISO 10303-41. The following modifications apply to this part of ISO 10303.

Associated global rule:

The following global rule defined in this part of ISO 10303 applies to the **description_attribute** entity:

© ISO 2001 – All rights reserved

- **version2_p41_uninstantiable_basic_attributes** (see 5.2.4.21).

5.2.3.2.11 pre_defined_item

The base definition of the **pre_defined_item** entity is given in ISO 10303-41. The following modifications apply to this part of ISO 10303.

Associated global rule:

The following global rule defined in this part of ISO 10303 applies to the **pre_defined_item** entity:

- **subtype_mandatory_defined_item** (see 5.2.4.17).

5.2.3.2.12 product_context

The base definition of the **product_context** entity is given in ISO 10303-41. The following modifications apply to this part of ISO 10303.

Associated global rules:

The following global rules defined in this part of ISO 10303 apply to the **product_context** entity:

- **dependent_instantiable_product_context** (see 5.2.4.10);
- **product_context_discipline_type_constraint** (see 5.2.4.12).

5.2.3.2.13 product_definition

The base definition of the **product_definition** entity is given in ISO 10303-41. The following modifications apply to this part of ISO 10303.

Associated global rule:

The following global rule defined in this part of ISO 10303 applies to the **product_definition** entity:

- product_definition_usage_constraint (see 5.2.4.14).

5.2.3.2.14 product_definition_context

The base definition of the **product_definition_context** entity is given in ISO 10303-41. The following modifications apply to this part of ISO 10303.

Associated global rules:

The following global rules defined in this part of ISO 10303 apply to the **product_definition_context** entity:

- **dependent_instantiable_product_definition_context** (see 5.2.4.11);
- **product_definition_context_name_constraint** (see 5.2.4.13).

© ISO 2001 – All rights reserved

5.2.3.2.15 role_association

The base definition of the **role_association** entity is given in ISO 10303-41. The following modifications apply to this part of ISO 10303.

Associated global rule:

The following global rule defined in this part of ISO 10303 applies to the **role_association** entity:

- version2_p41_object_role_selection (see 5.2.4.20).

5.2.3.2.16 versioned_action_request

The base definition of the **versioned_action_request** entity is given in ISO 10303-41. The following modifications apply to this part of ISO 10303.

Associated global rules:

The following global rules defined in this part of ISO 10303 apply to the **versioned_action_request** entity:

- **change_life_cycle_stage_usage_requires_approval** (see 5.2.4.7);
- **change_life_cycle_stage_usage_requires_stage** (see 5.2.4.8);

5.2.4 Plant spatial configuration rule definitions

5.2.4.1 application_context_requires_ap_definition

The **application_context_requires_ap_definition** rule specifies that each instance of **application_-context** shall be referenced by exactly one **application_protocol_definition** that specifies this part of ISO 10303.

EXPRESS specification:

```
*)
RULE application_context_requires_ap_definition FOR
  (application_context, application_protocol_definition);
WHERE
  WR1: SIZEOF (QUERY (ac <* application_context |
       NOT (SIZEOF (QUERY (apd <* application_protocol_definition |
       (ac :=: apd.application)
       AND
       (apd.application_interpreted_model_schema_name =
       'plant_spatial_configuration'))) = 1 ))) = 0;
END_RULE;
(*
```

Argument definitions:

application_context: the set of all instances of the **application_context** entity data type.

application_protocol_definition: the set of all instances of the **application_protocol_definition** entity data type.

© ISO 2001 – All rights reserved

Formal propositions:

WR1: For each instance of **application_context**, there shall be exactly one instance of **application_-protocol_definition** that references the instance of **application_context** as its **application** with a value of 'plant_spatial_configuration' as its **application_interpreted_model_schema_name**.

5.2.4.2 approval_requires_approval_date_time

Every **approval** shall have exactly one **approval_date_time**.

EXPRESS specification:

```
*)
RULE approval_requires_approval_date_time FOR
  (approval_date_time,
   approval);
WHERE
  WR1: SIZEOF (QUERY (app <* approval |
       NOT (SIZEOF (QUERY (adt <* approval_date_time |
       (app :=: adt.dated_approval))) = 1))) = 0;
END_RULE;
(*
```

Formal propositions:

WR1: For each **approval** there shall be exactly one **approval_date_time** that has the **approval** as its **dated_approval**.

5.2.4.3 approval_requires_approval_person_organization

Every **approval** shall have exactly one **approval_person_organization**.

EXPRESS specification:

```
*)
RULE approval_requires_approval_person_organization FOR
  (approval_person_organization,
   approval);
WHERE
  WR1: SIZEOF (QUERY (app <* approval |
       NOT (SIZEOF (QUERY (apo <* approval_person_organization |
       (app :=: apo.authorized_approval))) = 1))) = 0;
END_RULE;
(*
```

Formal propositions:

WR1: For each **approval** there shall be exactly one **approval_person_organization** that has the **approval** as its **authorized_approval**.

5.2.4.4 change_action_requires_date

Every **change_action** shall have a date assigned to it.

EXPRESS specification:

```
*)
RULE change_action_requires_date FOR
  (change_action,
```


© ISO 2001 – All rights reserved

```
   applied_date_assignment);
WHERE
  WR1: SIZEOF (QUERY (ca <* change_action |
       NOT (SIZEOF (QUERY (pscda <*
       applied_date_assignment |
       (ca IN pscda.items))) = 1))) = 0;
END_RULE;
(*
```

Formal propositions:

WR1: For each **change_action** there shall be exactly one **applied_date_assignment** that contains the **change_action** in its set of **items**.

5.2.4.5 change_item_requires_creation_date

Every item of a **plant_spatial_configuration_change_assignment** shall have a date assigned to it with the role of ‘creation date’.

EXPRESS specification:

```
*)
RULE change_item_requires_creation_date FOR
  (plant_spatial_configuration_change_assignment,
   applied_date_assignment);
WHERE
  WR1: SIZEOF (QUERY (pscca <*
           plant_spatial_configuration_change_assignment |
       NOT (SIZEOF (QUERY (ch_it <* pscca.items |
       NOT (SIZEOF (QUERY (pscda <*
           applied_date_assignment |
       (NOT (ch_it IN pscda.items) OR
       (pscda.role.name = 'creation date')))) = 1))) = 0))) = 0;
END_RULE;
(*
```

Formal propositions:

WR1: For each item of a **plant_spatial_configuration_change_assignment** there shall be exactly one **applied_date_assignment** with a role of ‘creation date’ that assigns a date to the item.

5.2.4.6 change_item_requires_id

Every item of a **plant_spatial_configuration_change_assignment** shall have an identification assigned to it.

EXPRESS specification:

```
*)
RULE change_item_requires_id FOR
  (plant_spatial_configuration_change_assignment,
   change_item_id_assignment);
WHERE
  WR1: SIZEOF (QUERY (pscca <*
           plant_spatial_configuration_change_assignment |
       NOT (SIZEOF (QUERY (ch_it <* pscca.items |
       NOT (SIZEOF (QUERY (ciia <* change_item_id_assignment |
       (ch_it IN ciia.items))) = 1))) = 0))) = 0;
END_RULE;
(*
```


© ISO 2001 – All rights reserved

Formal propositions:

WR1: For each item of a **plant_spatial_configuration_change_assignment** there shall be exactly one **change_item_id_assignment** that assigns an identification to the item.

5.2.4.7 change_life_cycle_stage_usage_requires_approval

Every **versioned_action_request** shall have an approval assigned to it.

EXPRESS specification:

```
*)
RULE change_life_cycle_stage_usage_requires_approval FOR
  (versioned_action_request,
   applied_approval_assignment);
WHERE
  WR1: SIZEOF (QUERY (vareq <* versioned_action_request |
       NOT (SIZEOF (QUERY (pscaa <*
       applied_approval_assignment |
       vareq IN pscaa.items)) = 1))) = 0;
END_RULE;
(*
```

Formal propositions:

WR1: For each **versioned_action_request** there shall be exactly one **applied_approval_assignment** that contains the **versioned_action_request** in its set of items.

5.2.4.8 change_life_cycle_stage_usage_requires_stage

Every **versioned_action_request** shall have a status assigned to it.

EXPRESS specification:

```
*)
RULE change_life_cycle_stage_usage_requires_stage FOR
  (versioned_action_request,
   action_request_status);
WHERE
  WR1: SIZEOF (QUERY (vareq <* versioned_action_request |
       NOT (SIZEOF (QUERY (ars <* action_request_status |
       vareq :=: ars.assigned_request)) = 1))) = 0;
END_RULE;
(*
```

Formal propositions:

WR1: For each **versioned_action_request** there shall be exactly one **action_request_status** that has the **versioned_action_request** as its **assigned_request**.

5.2.4.9 dependent_instantiable_application_context

The **dependent_instantiable_application_context** rule specifies that all instances of **application_-context** are dependent on their usage to define another entity.

EXPRESS specification:

```
*)
RULE dependent_instantiable_application_context FOR (application_context);
```


© ISO 2001 – All rights reserved

```
WHERE
  WR1: SIZEOF (QUERY (ac <* application_context |
       NOT (SIZEOF (USEDIN (ac, '')) >= 1))) = 0;
END_RULE;
(*
```

Argument definition:

application_context: the set of all instances of the **application_context** entity data type.

Formal proposition:

WR1: For each instance of **application_context**, there shall be a reference to the **application_context** instance from an attribute of another entity.

5.2.4.10 dependent_instantiable_product_context

The **dependent_instantiable_product_context** rule specifies that all instances of **product_context** are dependent on their usage to define another entity.

EXPRESS specification:

```
*)
RULE dependent_instantiable_product_context FOR (product_context);
WHERE
  WR1: SIZEOF (QUERY (pc <* product_context |
       NOT (SIZEOF (USEDIN (pc, '')) >= 1))) = 0;
END_RULE;
(*
```

Argument definition:

product_context: the set of all instances of the **product_context** entity data type.

Formal proposition:

WR1: For each instance of **product_context**, there shall be a reference to the **product_context** instance from an attribute of another entity.

5.2.4.11 dependent_instantiable_product_definition_context

The **dependent_instantiable_product_definition_context** rule specifies that all instances of **product_-definition_context** are dependent on their usage to define another entity.

EXPRESS specification:

```
*)
RULE dependent_instantiable_product_definition_context FOR
  (product_definition_context);
WHERE
  WR1: SIZEOF (QUERY (pdc <* product_definition_context |
       NOT (SIZEOF (USEDIN (pdc, '')) >= 1))) = 0;
END_RULE;
(*
```


© ISO 2001 – All rights reserved

Argument definition:

product_definition_context: the set of all instances of the **product_definition_context** entity data type.

Formal proposition:

WR1: For each instance of **product_definition_context**, there shall be a reference to the **product_-definition_context** instance from an attribute of another entity.

5.2.4.12 product_context_discipline_type_constraint

Every **product_context** shall have a **discipline_type** of ‘process plant’.

EXPRESS specification:

```
*)
RULE product_context_discipline_type_constraint FOR
  (product_context);
WHERE
  WR1: SIZEOF (QUERY (pc <* product_context |
       NOT (pc.discipline_type = 'process plant'))) = 0;
END_RULE;
(*
```

Formal propositions:

WR1: For each **product_context**, the **name** shall be ‘process plant’.

5.2.4.13 product_definition_context_name_constraint

Every **product_definition_context** shall have a name of ‘functional definition’, ‘physical definition’, ‘functional occurrence’, ‘physical occurrence’, ‘catalogue definition’, or ‘fabrication assembly’.

EXPRESS specification:

```
*)
RULE product_definition_context_name_constraint FOR
  (product_definition_context);
WHERE
  WR1: SIZEOF (QUERY (pdc <* product_definition_context |
       NOT (pdc.name IN
       ['functional definition', 'physical definition',
        'functional occurrence', 'physical occurrence',
        'catalogue definition', 'fabrication assembly']))) = 0;
END_RULE;
(*
```

Formal propositions:

WR1: For each **product_definition_context**, the **name** shall be ‘functional definition’, ‘physical definition’, ‘functional occurrence’, ‘physical occurrence’, ‘catalogue definition’, or ‘fabrication assembly’.

5.2.4.14 product_definition_usage_constraint

Every **product_definition** that identifies an item that may be used as a component of a plant shall have restricted participation in relationships with other **product_definition**s.

© ISO 2001 – All rights reserved

EXPRESS specification:

```
*)
RULE product_definition_usage_constraint FOR (product_definition);
WHERE
  WR1: SIZEOF (QUERY (pd <* product_definition |
       ((pd.frame_of_reference.name = 'physical occurrence') AND
       (NOT (SIZEOF (QUERY (pdr <* USEDIN (pd,
       'PLANT_SPATIAL_CONFIGURATION.PRODUCT_DEFINITION_RELATIONSHIP.' +
       'RELATED_PRODUCT_DEFINITION') |
       SIZEOF (TYPEOF (pdr) *
       ['PLANT_SPATIAL_CONFIGURATION.PRODUCT_DEFINITION_USAGE',
       'PLANT_SPATIAL_CONFIGURATION.MAKE_FROM_USAGE_OPTION',
       'PLANT_SPATIAL_CONFIGURATION.ASSEMBLY_COMPONENT_USAGE'])
       = 1)) <= 1))))) = 0;
END_RULE;
(*
```

Formal propositions:

WR1: For each **product_definition** that has a **product_definition_context** where the name is ‘physical occurrence’, the **product_definition** shall be the **related product_definition** in at most one **product_-definition_usage**, **make_from_usage_option**, or **assembly_component_usage**.

5.2.4.15 subtype_exclusive_characterized_object

All instances of **characterized_object** shall be an instance of at most one of **piping_component_class**, **site**, **stream_design_case**, or **inspection_condition**.

EXPRESS specification:

```
*)
RULE subtype_exclusive_characterized_object FOR
  (characterized_object);
WHERE
  WR1: SIZEOF (QUERY (co <*characterized_object |
       NOT (SIZEOF (['PLANT_SPATIAL_CONFIGURATION.PIPING_COMPONENT_CLASS',
       'PLANT_SPATIAL_CONFIGURATION.SITE',
       'PLANT_SPATIAL_CONFIGURATION.STREAM_DESIGN_CASE']
       * TYPEOF (co)) <= 1))) = 0;
END_RULE;
(*
```

Formal propositions:

WR1: Every instance of **characterized_object** shall also be an instance of at most one of **piping_-component_class**, **site**, or **stream_design_case**.

5.2.4.16 subtype_mandatory_externally_defined_item

All instances of **externally_defined_item** shall either be be instances of **known_source** or of **externally_defined_document**.

EXPRESS specification:

```
*)
RULE subtype_mandatory_externally_defined_item FOR
  (externally_defined_item);
WHERE
  WR1: SIZEOF (QUERY (edi <* externally_defined_item |
       NOT (SIZEOF (['PLANT_SPATIAL_CONFIGURATION.CATALOGUE_CONNECTOR',
```


© ISO 2001 – All rights reserved

```
       'PLANT_SPATIAL_CONFIGURATION.EXTERNALLY_DEFINED_CLASS',
       'PLANT_SPATIAL_CONFIGURATION.EXTERNALLY_DEFINED_PLANT_ITEM_DEFINITION',
       'PLANT_SPATIAL_CONFIGURATION.EXTERNALLY_DEFINED_DOCUMENT']
       * TYPEOF (edi)) = 1))) = 0;
END_RULE;
(*
```

Formal propositions:

WR1: Every instance of **externally_defined_item** shall also be an instance of one of **catalogue_-connector**, **externally_defined_classification**, **externally_defined_plant_item_definition**, or **externally_defined_document**.

5.2.4.17 subtype_mandatory_pre_defined_item

All instances of **pre_defined_item** shall be instances of **known_source**.

EXPRESS specification:

```
*)
RULE subtype_mandatory_pre_defined_item FOR
  (pre_defined_item);
WHERE
  WR1: SIZEOF (QUERY (pdi <* pre_defined_item |
       NOT ('PLANT_SPATIAL_CONFIGURATION.KNOWN_SOURCE' IN
       TYPEOF (pdi)))) = 0;
END_RULE;
(*
```

Formal propositions:

WR1: Every instance of **pre_defined_item** shall also be an instance of **known_source**.

5.2.4.18 subtype_mandatory_shape_representation

All instances of **shape_representation** shall be instances of exactly one of **hybrid_shape_-representation**, **plant_csg_shape_representation**, **shape_dimension_representation**, **site_-representation**, or **plant_design_csg_primitive**.

EXPRESS specification:

```
*)
RULE subtype_mandatory_shape_representation FOR
  (shape_representation);
WHERE
  WR1: SIZEOF (QUERY (sr <* shape_representation |
       NOT (SIZEOF (['PLANT_SPATIAL_CONFIGURATION.' +
       'PLANT_CSG_SHAPE_REPRESENTATION',
       'PLANT_SPATIAL_CONFIGURATION.HYBRID_SHAPE_REPRESENTATION',
       'PLANT_SPATIAL_CONFIGURATION.SHAPE_DIMENSION_REPRESENTATION',
       'PLANT_SPATIAL_CONFIGURATION.' +
       'SITE_REPRESENTATION',
       'PLANT_SPATIAL_CONFIGURATION.PLANT_DESIGN_CSG_PRIMITIVE']
       * TYPEOF (sr)) = 1))) = 0;
END_RULE;
(*
```

Formal propositions:

WR1: Every instance of **shape_representation** shall be an instance of exactly one of **plant_csg_shape_-**

© ISO 2001 – All rights reserved

representation, **hybrid_shape_representation**, **shape_dimension_representation**, **site_-representation**, or plant_design_csg_primitive.

5.2.4.19 value_for_application_context

The application attribute of **application_context** shall have a value of ‘plant spatial configuration’.

EXPRESS specification:

```
*)
RULE value_for_application_context FOR
  (application_context);
WHERE
  WR1: SIZEOF (QUERY (ac <* application_context |
       NOT (ac.application = 'plant spatial configuration'))) = 0;
END_RULE;
(*
```

Formal propositions:

WR1: Every **application_context** shall have an application attribute with a value of ‘plant spatial configuration’.

5.2.4.20 version2_p41_object_role_selection

Every **role_association** instance shall associate a role with only a **plant_spatial_configuration_-change_assignment**.

EXPRESS specification:

```
*)
RULE version2_p41_object_role_selection FOR
  (role_association);
WHERE
  WR1: SIZEOF (QUERY (ra <* role_association |
       NOT ('PLANT_SPATIAL_CONFIGURATION.' +
       'PLANT_SPATIAL_CONFIGURATION_CHANGE_ASSIGNMENT' IN
       TYPEOF (ra.item_with_role)))) = 0;
END_RULE;
(*
```

Formal propositions:

WR1: Each **role_association** shall reference only instances of **plant_spatial_configuration_change_-assignment** as its **item_with_role**.

5.2.4.21 version2_p41_uninstantiable_basic_attributes

There shall be no instances of **description_attribute**, **id_attribute**, or **name_attribute** populated according to this part of ISO 10303.

EXPRESS specification:

```
*)
RULE version2_p41_uninstantiable_basic_attributes FOR
  (description_attribute, id_attribute, name_attribute);
WHERE
  WR1: SIZEOF (bag_to_set (description_attribute)) = 0;
      WR2: SIZEOF (bag_to_set (id_attribute)) = 0;
```


© ISO 2001 – All rights reserved

```
  WR3: SIZEOF (bag_to_set (name_attribute)) = 0;
END_RULE;
(*
```

Formal propositions:

WR1: There shall be zero instances of **description_attribute**.

WR2: There shall be zero instances of **id_attribute**.

WR3: There shall be zero instances of **name_attribute**.

5.2.5 Plant spatial configuration function definitions

5.2.5.1 applied_identification_correlation

The **applied_organization_correlation** boolean function returns TRUE if the **name** attribute of the **identification_role** entity is coordinated with the type of entity selected in the **items** of an **applied_-organization_assignment**.

EXPRESS specification:

```
*)
FUNCTION applied_identification_correlation
  (aia : applied_identification_assignment ) : BOOLEAN;
  LOCAL
    i_role : STRING;
  END_LOCAL;
    i_role := aia\identification_assignment.role.name;
  CASE i_role OF
    'global unambiguous identifier' :
                          IF SIZEOF (aia.items) <>
                          SIZEOF (QUERY (x <* aia.items |
                          'PLANT_SPATIAL_CONFIGURATION.PRODUCT_DEFINITION'
                          IN TYPEOF (x)))
                          THEN RETURN(FALSE);
                          END_IF;
    'stock code'        : IF SIZEOF (aia.items) <>
                          SIZEOF (QUERY (x <* aia.items |
                          'PLANT_SPATIAL_CONFIGURATION.PRODUCT_DEFINITION'
                          IN TYPEOF (x)))
                          THEN RETURN(FALSE);
                          END_IF;
    'weld id'           : IF SIZEOF (aia.items) <>
                          SIZEOF (QUERY (x <* aia.items |
                          'PLANT_SPATIAL_CONFIGURATION.MATERIAL_PROPERTY'
                          IN TYPEOF (x)))
                          THEN RETURN(FALSE);
                          END_IF;
    'connecting portion id'
                        : IF SIZEOF (aia.items) <>
                          SIZEOF (QUERY (x <* aia.items |
                          'PLANT_SPATIAL_CONFIGURATION.MATERIAL_PROPERTY'
                          IN TYPEOF (x)))
                          THEN RETURN(FALSE);
                          END_IF;
    'analysis data point id'
                        : IF SIZEOF (aia.items) <>
                          SIZEOF (QUERY (x <* aia.items |
                          'PLANT_SPATIAL_CONFIGURATION.SHAPE_ASPECT'
                          IN TYPEOF (x)))
                          THEN RETURN(FALSE);
                          END_IF;
    'document version id'
```


© ISO 2001 – All rights reserved

```
                        : IF SIZEOF (aia.items) <>
                          SIZEOF (QUERY (x <* aia.items |
                          'PLANT_SPATIAL_CONFIGURATION.DOCUMENT'
                          IN TYPEOF (x)))
                          THEN RETURN(FALSE);
                          END_IF;
    OTHERWISE : RETURN(TRUE);
  END_CASE;
  RETURN (TRUE);
END_FUNCTION;
(*
```

Argument definitions:

aia: the input **applied_identification_assignment** to be checked.

5.2.5.2 bag_to_set

The **bag_to_set** function converts BAGs into SETs.

EXAMPLE It can be used to convert the BAGs returned by the USEDIN function into SETs that can be properly assigned to variables that are SETs.

EXPRESS specification:

```
*)
FUNCTION bag_to_set (the_bag: BAG OF GENERIC:intype) :
    SET OF GENERIC:intype;
  LOCAL
    the_set : SET OF GENERIC:intype := [];
    i       : INTEGER;
  END_LOCAL;
  IF SIZEOF(the_bag) > 0 THEN
    REPEAT i := 1 TO HIINDEX(the_bag) BY 1;
      the_set := the_set + the_bag[i];
    END_REPEAT;
  END_IF;
  RETURN(the_set);
END_FUNCTION;
(*
```

Argument definitions:

the_bag: the BAG that is to be converted into a SET.

5.2.5.3 class_in_tree

The **class_in_tree** function is a boolean function that returns true if the specified **group** has the **name** specified by the **val** parameter, or if the specified **group** has a parent in a tree of related **group**s with the **name** specified by the **val** parameter.

EXPRESS specification:

```
*)
FUNCTION class_in_tree (class : group; val : STRING) : BOOLEAN;
  IF class.name = val THEN RETURN (TRUE);
  ELSE
    RETURN (SIZEOF (QUERY (gr <* USEDIN (class,
    'PLANT_SPATIAL_CONFIGURATION.' +
    'GROUP_RELATIONSHIP.RELATED_GROUP') |
    class_in_tree (gr.relating_group, val))) = 1);
      END_IF;
```


© ISO 2001 – All rights reserved

```
  RETURN (FALSE);
END_FUNCTION;
(*
```

Argument definitions:

class: the **group** containing the **name** for which the specified value is required.

val: the **value** that is required for the name of the **group**.

5.2.5.4 plant_spatial_configuration_organization_correlation

The **plant_spatial_configuration_organization_correlation** boolean function returns TRUE if the **name** attribute of the **organization_role** entity is coordinated with the type of entity selected in the **items** of a **plant_spatial_configuration_organization_assignment**.

EXAMPLE If the role for an **organization** is 'vendor', then all of the **items** in the set must be either **product** or **document**.

EXPRESS specification:

```
*)
FUNCTION plant_spatial_configuration_organization_correlation
  (e : plant_spatial_configuration_organization_assignment ) : BOOLEAN;
  LOCAL
    o_role : STRING;
  END_LOCAL;
    o_role := e\organization_assignment.role.name;
  CASE o_role OF
    'vendor'            : IF SIZEOF (e.items) <>
                          SIZEOF (QUERY (x <* e.items |
                          SIZEOF(['PLANT_SPATIAL_CONFIGURATION.PRODUCT',
                                  'PLANT_SPATIAL_CONFIGURATION.DOCUMENT'] *
                          TYPEOF (x)) = 1))
                          THEN RETURN(FALSE);
                          END_IF;
    'owner'             : IF SIZEOF (e.items) <>
                          SIZEOF (QUERY (x <* e.items |
                          SIZEOF(['PLANT_SPATIAL_CONFIGURATION.SITE',
                                 'PLANT_SPATIAL_CONFIGURATION.DOCUMENT'] *
                          TYPEOF (x)) = 1))
                          THEN RETURN(FALSE);
                          END_IF;
    'plant operator'    : IF SIZEOF (e.items) <>
                          SIZEOF (QUERY (x <* e.items |
                          'PLANT_SPATIAL_CONFIGURATION.PLANT'
                          IN TYPEOF (x)))
                          THEN RETURN(FALSE);
                          END_IF;
    'plant owner'       : IF SIZEOF (e.items) <>
                          SIZEOF (QUERY (x <* e.items |
                          'PLANT_SPATIAL_CONFIGURATION.PLANT'
                          IN TYPEOF (x)))
                          THEN RETURN(FALSE);
                          END_IF;
    'project owner'     : IF SIZEOF (e.items) <>
                          SIZEOF (QUERY (x <* e.items |
                          'PLANT_SPATIAL_CONFIGURATION.DESIGN_PROJECT'
                          IN TYPEOF (x)))
                          THEN RETURN(FALSE);
                          END_IF;
    'assessor'          : IF SIZEOF (e.items) <>
                          SIZEOF (QUERY (x <* e.items |
                          'PLANT_SPATIAL_CONFIGURATION.' +
                          'PRODUCT_DEFINITION_RELATIONSHIP'
```


© ISO 2001 – All rights reserved

```
                          IN TYPEOF (x)))
                          THEN RETURN(FALSE);
                          END_IF;
    OTHERWISE : RETURN(TRUE);
  END_CASE;
  RETURN (TRUE);
END_FUNCTION;
(*
```

Argument definitions:

e: the input **plant_spatial_configuration_organization_assignment** to be checked.

5.2.5.5 plant_spatial_configuration_person_and_organization_correlation

The **plant_spatial_configuration_person_and_organization_correlation** boolean function returns TRUE if the **name** attribute of the **person_organization_role** entity is coordinated with the type of entity selected in the **items** of a **plant_spatial_configuration_person_and_organization_assignment**.

EXAMPLE If the role for a **person_and_organization** is ‘owner’, then all of the **items** in the set must be either **site** or **change_item**.

EXPRESS specification:

```
*)
FUNCTION plant_spatial_configuration_person_and_organization_correlation
  (e : plant_spatial_configuration_person_and_organization_assignment )
  : BOOLEAN;
  LOCAL
    po_role : STRING;
  END_LOCAL;
    po_role := e\person_and_organization_assignment.role.name;
  CASE po_role OF
    'owner'             : IF SIZEOF (e.items) <>
                          SIZEOF (QUERY (x <* e.items |
                          SIZEOF(['PLANT_SPATIAL_CONFIGURATION.SITE',
                                  'PLANT_SPATIAL_CONFIGURATION.' +
                                  'CHANGE_ITEM'] *
                          TYPEOF (x)) = 1))
                          THEN RETURN(FALSE);
                          END_IF;
    'plant owner'       : IF SIZEOF (e.items) <>
                          SIZEOF (QUERY (x <* e.items |
                          'PLANT_SPATIAL_CONFIGURATION.PLANT'
                          IN TYPEOF (x)))
                          THEN RETURN(FALSE);
                          END_IF;
    'plant operator'    : IF SIZEOF (e.items) <>
                          SIZEOF (QUERY (x <* e.items |
                          'PLANT_SPATIAL_CONFIGURATION.PLANT'
                          IN TYPEOF (x)))
                          THEN RETURN(FALSE);
                          END_IF;
    OTHERWISE : RETURN(TRUE);
  END_CASE;
  RETURN (TRUE);
END_FUNCTION;
(*
```

Argument definitions:

e: the input **plant_spatial_configuration_person_and_organization_assignment** to be checked.

© ISO 2001 – All rights reserved

5.2.5.6 plant_spatial_configuration_person_correlation

The **plant_spatial_configuration_person_correlation** boolean function returns TRUE if the **name** attribute of the **person_role** entity is coordinated with the type of entity selected in the **items** of a **plant_spatial_configuration_person_assignment**.

EXAMPLE If the role for a **person** is 'owner', then all of the **items** in the set must be either **site** or **document**.

EXPRESS specification:

```
*)
FUNCTION plant_spatial_configuration_person_correlation
  (e : plant_spatial_configuration_person_assignment ) : BOOLEAN;
  LOCAL
    p_role : STRING;
  END_LOCAL;
    p_role := e\person_assignment.role.name;
  CASE p_role OF
    'vendor'            : IF SIZEOF (e.items) <>
                          SIZEOF (QUERY (x <* e.items |
                          'PLANT_SPATIAL_CONFIGURATION.DOCUMENT'
                          IN TYPEOF (x)))
                          THEN RETURN(FALSE);
                          END_IF;
    'owner'             : IF SIZEOF (e.items) <>
                          SIZEOF (QUERY (x <* e.items |
                          SIZEOF(['PLANT_SPATIAL_CONFIGURATION.SITE',
                                  'PLANT_SPATIAL_CONFIGURATION.DOCUMENT'] *
                          TYPEOF (x)) = 1))
                          THEN RETURN(FALSE);
                          END_IF;
    'plant owner'       : IF SIZEOF (e.items) <>
                          SIZEOF (QUERY (x <* e.items |
                          'PLANT_SPATIAL_CONFIGURATION.PLANT'
                          IN TYPEOF (x)))
                          THEN RETURN(FALSE);
                          END_IF;
    'assessor'          : IF SIZEOF (e.items) <>
                          SIZEOF (QUERY (x <* e.items |
                          'PLANT_SPATIAL_CONFIGURATION.' +
                          'PRODUCT_DEFINITION_RELATIONSHIP'
                          IN TYPEOF (x)))
                          THEN RETURN(FALSE);
                          END_IF;
    OTHERWISE : RETURN(TRUE);
  END_CASE;
  RETURN (TRUE);
END_FUNCTION;
(*
```

Argument definitions:

e: the input **plant_spatial_configuration_person_assignment** to be checked.

5.2.5.7 valid_advanced_csg_tree

The **valid_advanced_csg_tree** function returns true if the elements that comprise the CSG tree passed in as a parameter satisfy the requirements defined for advanced CSG trees.

EXPRESS specification:

```
*)
FUNCTION valid_advanced_csg_tree (tree_element : boolean_operand) : BOOLEAN;
  -- return true if the tree_element is a valid primitive
```


© ISO 2001 – All rights reserved

```
  IF SIZEOF (TYPEOF (tree_element) *
    ['PLANT_SPATIAL_CONFIGURATION.BLOCK',
    'PLANT_SPATIAL_CONFIGURATION.TORUS',
    'PLANT_SPATIAL_CONFIGURATION.RIGHT_CIRCULAR_CYLINDER',
    'PLANT_SPATIAL_CONFIGURATION.SPHERE',
    'PLANT_SPATIAL_CONFIGURATION.RIGHT_CIRCULAR_CONE',
    'PLANT_SPATIAL_CONFIGURATION.ECCENTRIC_CONE',
    'PLANT_SPATIAL_CONFIGURATION.PLANT_DESIGN_CSG_PRIMITIVE',
    'PLANT_SPATIAL_CONFIGURATION.CYCLIDE_SEGMENT_SOLID',
    'PLANT_SPATIAL_CONFIGURATION.RECTANGULAR_PYRAMID',
    'PLANT_SPATIAL_CONFIGURATION.EXTRUDED_AREA_SOLID',
    'PLANT_SPATIAL_CONFIGURATION.REVOLVED_AREA_SOLID',
    'PLANT_SPATIAL_CONFIGURATION.HALF_SPACE_SOLID']) = 1
    THEN RETURN (TRUE);
    ELSE
    -- if the tree_element is a boolean_result check its operations and
    -- operands
    IF 'PLANT_SPATIAL_CONFIGURATION.BOOLEAN_RESULT'
    IN TYPEOF (tree_element)
      THEN
      -- addition and subtraction are the only valid operations
      IF NOT (tree_element\boolean_result.operator
        IN [boolean_operator.union, boolean_operator.difference])
        THEN RETURN (FALSE);
      END_IF;
      -- if the operand is a half_space_solid, check for advanced surface
      -- otherwise return false and recursively check second operand
      IF 'PLANT_SPATIAL_CONFIGURATION.HALF_SPACE_SOLID' IN
        TYPEOF (tree_element\boolean_result.first_operand) THEN
        IF 'PLANT_SPATIAL_CONFIGURATION.ELEMENTARY_SURFACE' IN
          TYPEOF (tree_element\boolean_result.
                  first_operand\half_space_solid.base_surface) THEN
          IF 'PLANT_SPATIAL_CONFIGURATION.HALF_SPACE_SOLID' IN
            TYPEOF (tree_element\boolean_result.second_operand) THEN
            IF 'PLANT_SPATIAL_CONFIGURATION.ELEMENTARY_SURFACE' IN
              TYPEOF (tree_element\boolean_result.
                      second_operand\half_space_solid.base_surface) THEN
              RETURN (TRUE);
              ELSE RETURN (FALSE);
            END_IF;
            ELSE RETURN (valid_advanced_csg_tree
            (tree_element\boolean_result.second_operand));
          END_IF;
          ELSE RETURN (FALSE);
        END_IF;
        ELSE
          IF 'PLANT_SPATIAL_CONFIGURATION.HALF_SPACE_SOLID' IN
            TYPEOF (tree_element\boolean_result.second_operand) THEN
            IF 'PLANT_SPATIAL_CONFIGURATION.ELEMENTARY_SURFACE' IN TYPEOF
              (tree_element\boolean_result.second_operand\half_space_solid.
               base_surface) THEN
              RETURN (valid_advanced_csg_tree
                        (tree_element\boolean_result.first_operand));
              ELSE
              RETURN (FALSE);
            END_IF;
            ELSE
            RETURN (valid_advanced_csg_tree
                      (tree_element\boolean_result.first_operand) AND
                    valid_advanced_csg_tree
                      (tree_element\boolean_result.second_operand));
          END_IF;
      END_IF;
    END_IF;
  END_IF;
  RETURN (FALSE);
END_FUNCTION;
(*
```


© ISO 2001 – All rights reserved

Argument definitions:

tree_element: (input) the **boolean_operand** to be evaluated.

```
*)
END_SCHEMA;
(*
```


© ISO 2001 – All rights reserved

6 Conformance requirements

Conformance to this part of ISO 10303 includes satisfying the requirements stated in this part, the requirements of the implementation method(s) supported, and the relevant requirements of the normative references.

An implementation shall support at least one of the following implementation methods:

— ISO 10303-21.

Requirements with respect to implementation methods-specific requirements are specified in annex C.

The Protocol Information Conformance Statement (PICS) proforma lists the options or the combinations of options that may be included in the implementation. The PICS proforma is provided in annex D.

This part of ISO 10303 provides for a number of options that may be supported by an implementation. These options have been grouped into the following conformance classes:

— class 1 - provides piping system functional information;

— class 2 - provides equipment and component spatial information;

— class 3 - provides plant layout and piping design information;

— class 4 - provides piping fabrication and installation information;

— class 5 - provides piping inspection information;

— class 6 - provides HVAC system functional information;

— class 7 - provides HVAC spatial information;

— class 8 - provides cableway spatial information;

— class 9 - provides piping and HVAC analysis information

Support for a particular conformance class requires support of all the options specified in this class. All nine conformance classes include information concerning plant item characterization, connectors, connections, and shape information.

Table 2 defines the units of functionality included within each conformance class.

Conformance to a particular class requires that all AIM elements defined as part of that class be supported. Table 3 defines the classes that each AIM element belongs to.

NOTE ISO 10303-32: describes the conformance assessment process.

6.1 Conformance class 1, piping system functional information

© ISO 2001 — All rights reserved

This conformance class provides piping system functional information. This conformance class contains functional information of the piping system and catalogue reference information, but no shape or spatial information. This conformance class enables the following activity:

— exchange of functional information on plant piping systems.

NOTE 1 The purpose of this conformance class is to provide an interface with ISO 10303-221[2)] [3] and piping functional design and schematics software.

NOTE 2 This conformance class is related to the following data flows between AAM activities:

— piping and instrumentation diagrams (preliminary) A222 to A223, A224, and A225;

— piping and instrumentation diagrams (AFD) A222 to A232 and A235;

— piping and instrumentation diagrams (design) A232 to A241;

— piping and instrumentation diagrams A241 to A242, A243, A244, A245, and O4.

6.2 Conformance class 2, equipment and component spatial information

This conformance class provides equipment and component spatial information. This conformance class contains basic equipment performance characteristics, connector location and orientation information, material specifications, version information, explicit shape, and catalogue reference information. This conformance class enables the exchange of minimal vendor equipment and component information.

NOTE This conformance class is related to the following data flows between AAM activities:

— equipment list C3 to A32;

— equipment characteristics C3 to A32;

— material requirements C3 to A32;

— specifications and standards C3 to A32 and A33;

— plant items A35 to A43.

6.3 Conformance class 3, plant layout and piping design information

This conformance class provides plant layout and piping design information. This conformance class contains design, layout, and spatial information for the plant, and catalogue reference information. This conformance class enables the exchange of plant layout and piping design information and supports the following activities:

— area classification;

— space analysis;

 © ISO 2001 — All rights reserved

— plant arrangement (placement of space occupying elements);

— spatial design of piping systems including pipe routing and component placement and placement of pipe supports;

— operation and maintenance analysis;

— constructability reviews;

— interference checking;

— development of equipment list and line list;

— development of equipment takeoffs;

— development of material takeoffs for piping and piping components;

— connectivity and topology checks;

— material and connection compatibility checks;

— provision of spatial design information to support fabrication and construction;

— spool and weld identification;

— plant startup;

— plant commissioning;

— plant operation;

— configuration management of plant items and piping system information.

NOTE 1 Although not explicitly cited above, this conformance class also supports the activities listed for the other conformance classes, except for piping inspection information.

NOTE 2 This conformance class is related to the following data flows between AAM activities:

— corporate standards to A22 and A24;

— societal requirements to A22 and A24;

— site information (existing) I3 to A222 and A224;

— site information (existing) I1 to A242;

— process flow diagrams C2 to A222, A223, A224, and A225;

— process flow diagrams C4 to A241;

— equipment list A223 to A222, A232, A233, and A241;

— equipment list A241 to A242, A245, and A32;

© ISO 2001 — All rights reserved

— equipment list C3 to A32;

— equipment characteristics (required) C1 to A222 and A223;

— equipment characteristics (functional) A222 to A223;

— equipment characteristics (performance) A223 to A222, A232, A233, and A241;

— equipment characteristics (performance) A241 to A242, A245, and A32;

— equipment characteristics (process) C1 to A241;

— equipment characteristics C3 to A32;

— piping and instrumentation diagrams (preliminary) A222 to A223, A224, and A225;

— piping and instrumentation diagrams (AFD) A222 to A232, A234, and A235;

— piping and instrumentation diagrams (design) C2 to A241;

— system layout (preliminary) A224 to A222, A232, A234, A235, and A242;

— system design (preliminary) A222 to A224, A232, A234, A235, and A242;

— system layout and design A242 to A243, A244, A245, and A41;

— change request (design) A222, A223, A224, and A225 to A21;

— change request (design) A241, A242, and A245 to A23;

— supplier documentation I3 to A241 and A242;

— specifications and standards C9 to A241, A242, A243, and A244;

— specifications and standards C3 to A32 and A33;

— material requirements A241 to A242, A245, and A32;

— material requirements C3 to A32;

— project-specific documents A241, A242, A243 to A32, A33, A34, and A35;

— plant items A35 to A43.

6.4 Conformance class 4, piping fabrication and installation information

This conformance class provides piping fabrication and installation information. This conformance class contains system, plant item, and line identification, piping information, plant

 © ISO 2001 — All rights reserved

item characteristics and shape, and catalogue reference information. This conformance class enables the exchange of piping fabrication and installation information.

NOTE This conformance class is related to the following data flows between AAM activities:

— plant items I1 to A43;

— change request A43 to A2;

— specifications and standards to A43;

— company requirements to A43;

— project-specific documents to A43;

— supplier documentation C1 to A43;

— piping materials I2 to A4233;

— piping installation documents C2 to A42331;

— piping fabrication documents C7 to A42331;

— piping materials I2 to A42331;

— standard practice C3 to A42332;

— shop fabrication details and schedule I1 to A42332.

6.5 Conformance class 5, piping inspection information

This conformance class provides piping inspection information in addition to the piping fabrication and installation information provided in conformance class 4. This conformance class contains system, plant item, and line identification, piping information, plant item characteristics and shape, catalogue reference information, and piping inspection information. This conformance class enables the exchange of piping inspection information in addition to piping fabrication and installation information.

NOTE This conformance class is related to the following data flows between AAM activities:

— plant items I1 to A43;

— change request A43 to A2;

— specifications and standards to A43;

— company requirements to A43;

— project-specific documents to A43;

— supplier documentation C1 to A43;

© ISO 2001 — All rights reserved

— piping materials I2 to A4233;

— piping installation documents C2 to A42331;

— piping fabrication documents C7 to A42331;

— piping materials I2 to A42331;

— standard practice C3 to A42332;

— shop fabrication details and schedule I1 to A42332;

— piping inspection documents C5 to A42333;

— inspection procedure C8 to A42333;

— construction documentation C4 to A42334.

6.6 Conformance class 6, HVAC system functional information

This conformance class provides HVAC system functional information. This conformance class contains functional information of the HVAC system and catalogue reference information, but no shape or spatial information. This conformance class enables the following activity:

— exchange of functional information on heating, ventilation, and air-conditioning (HVAC) systems.

NOTE This conformance class is related to the following data flows between AAM activities:

— piping and instrumentation diagrams (preliminary) A222 to A223, A224, and A225;

— piping and instrumentation diagrams (AFD) A222 to A232 and A235;

— piping and instrumentation diagrams (design) A232 to A241;

— piping and instrumentation diagrams A241 to A242, A243, A244, A245, and O4.

6.7 Conformance class 7, HVAC spatial information

This conformance class provides HVAC layout and design information. This conformance class contains design, layout, and spatial information for the HVAC systems within the plant, and catalogue reference information. This conformance class enables the exchange of HVAC layout and design information and supports the following activities:

— area classification;

— space analysis;

— plant arrangement (placement of space occupying elements);

 © ISO 2001 — All rights reserved

— spatial design of HVAC systems including component placement;

— HVAC operation and maintenance analysis;

— HVAC constructability reviews;

— interference checking;

— development of HVAC equipment list and line list;

— development of HVAC equipment takeoffs;

— development of material takeoffs for HVAC and HVAC components;

— connectivity and topology checks;

— material and connection compatibility checks;

— provision of spatial design information to support HVAC fabrication and construction.

NOTE This conformance class is related to the following data flows between AAM activities:

— corporate standards to A22 and A24;

— societal requirements to A22 and A24;

— site information (existing) I3 to A222 and A224;

— site information (existing) I1 to A242;

— HVAC equipment list A223 to A222, A232, A233, and A241;

— HVAC equipment list A241 to A242, A245, and A32;

— HVAC equipment list C3 to A32;

— HVAC equipment characteristics (required) C1 to A222 and A223;

— HVAC equipment characteristics C3 to A32;

— system layout (preliminary) A224 to A222, A232, A234, A235, and A242;

— system design (preliminary) A222 to A224, A232, A234, A235, and A242;

— system layout and design A242 to A243, A244, A245, and A41;

— change request (design) A222, A223, A224, and A225 to A21;

— change request (design) A241, A242, and A245 to A23;

— supplier documentation I3 to A241 and A242;

— specifications and standards C9 to A241, A242, A243, and A244;

© ISO 2001 — All rights reserved

— specifications and standards C3 to A32 and A33;

— material requirements A241 to A242, A245, and A32;

— material requirements C3 to A32;

— project-specific documents A241, A242, A243 to A32, A33, A34, and A35;

— plant items A35 to A43.

6.8 Conformance class 8, cableway spatial information

This conformance class provides cableway spatial information. This conformance class contains layout and spatial information for the cableway systems within the plant. This conformance class enables the exchange of cableway layout and spatial information, but does not provide the details of the cableway contents or the operating characteristics. Details of cableway contents or operating are beyond the scope of this edition of ISO 10303-227.

NOTE This conformance class is related to the following data flows between AAM activities:

— corporate standards to A22 and A24;

— societal requirements to A22 and A24;

— site information (existing) I3 to A222 and A224;

— site information (existing) I1 to A242;

— system layout (preliminary) A224 to A222, A232, A234, A235, and A242;

— system design (preliminary) A222 to A224, A232, A234, A235, and A242;

— system layout and design A242 to A243, A244, A245, and A41;

— change request (design) A222, A223, A224, and A225 to A21;

— change request (design) A241, A242, and A245 to A23.

6.9 Conformance class 9, piping and HVAC analysis information

This conformance class provides piping and HVAC analysis information. It enables the exchange of sufficient information about a piping or HVAC system for the performance of stress or flow analysis on the receiving system. It does not, however, include exchange of the results of such an analysis.

NOTE This conformance class is related to the data flow in the following AAM activity:

— analyze final plant design A245.

 © ISO 2001 — All rights reserved

6.10 Options within a conformance class

Conformance classes may be augmented to include one or more options. Each option indicates support for a specific type of shape representation or unit of functionality.

A shape representation option specifies the type of geometric and topological entities used to provide a shape representation for plant_items. These options are mutually exclusive, e.g. only one of A, B, or C may be specified. However, for conformance classes which include shape representation, one option must be specified.

- Option A indicates the use of Brep (Boundary representation) shape representation for the plant_item entities in the conformance class. This option is intended for use with software systems which utilize surface models and/or brep solid models.
- Option B indicates the use of simple CSG (Constructive Solid Geometry) shape representations for the plant_item entities in the conformance class. A simple CSG shape representation is generated entirely from CSG primitive solids. The use of solids constructed by swept surfaces, extrusion, or Brep is not supported. This option is intended for use with software systems which utilize traditional CSG solid models.
- Option C indicates the use of hybrid CSG shape representations for the plant_item entities in the conformance class. A hybrid CSG shape representation is generated from CSG primitives solids, Brep solids, or solids defined by swept surfaces, or extrusions. This option is intended for use with software systems which utilize both brep and CSG solid models.

An option for a unit of functionality option indicates support for the entities defined by that unit of functionality.
These options are not mutually exclusion. One or more of these options may be specified. Many software systems currently provide only limited support for these units of functionality. The options are intended to specify the capabilities of conforming systems while recognizing the limitations of existing systems.

- Option P indicates the entities for the plant characterization UoF are supported
- Option S indicates the entities for the site characterization UoF are supported. Site_characterization, in particular, allows the file to be specified as applying to a "ship" rather than to a traditional "process plant"
- Option R indicates the entities for the change information UoF are supported Change information allows revision history to be optionally included in an ISO 10303-227 file for any conformance class.

The resulting conformance class with option is designated by the conformance class number and option letter(s), e.g. Conformance Class 3 Options A,P,R.

© ISO 2001 — All rights reserved

Table 2 - Conformance classes

Units of functionality	Conformance classes								
	1 PSFN	2 EPSP	3 PLSP	4 PFB	5 PIN	6 HSFN	7 HSP	8 CSP	9 PHAN
Cableway_component_characterization	-	-	X	-	-	-		X	-
Connection	X	X	X	X	X	X	X	X	X
Connector	X	X	X	X	X	X	X	X	X
HVAC_component_characterization	-	-	X	-	-	X	X	-	X
HVAC_system_functional_ characterization	-	-	X	-	-	X	X	-	X
Piping_ inspection	-	-	-	-	X	-	-	-	-
Piping_component_characterization	X	X	X	X	X	-	-	-	X
Piping_system_functional_ characterization	X	X	X	-	-	-	-	-	X
Plant_item_characterization	X	X	X	X	X	X	X	X	X
Shape	X	X	X	X	X	X	X	X	X
Shape_representation options (Note 1) (options A, or B, or C)		A,B, C	A,B, C	A,B, C	A,B, C		A,B, C	A,B, C	
Change information (option R)	R	R	R	R	R	R	R	R	R
Plant_characterization (option P)	P	P	X	P	P	P	P	P	P
Site_characterization (option S)	S	S	S	S	S	S	S	S	S

1 – PSFN - Piping system functional information
2 – EPSP - Equipment and piping spatial information
3 – PLSP - Plant spatial information
4 – PFB - Piping fabrication and installation information
5 – PIN - Piping inspection information
6 – HSFN - HVAC system functional information

7 – HSP - HVAC spatial information
8 – CSP - Cableway spatial information
9 – PHAN - Piping and HVAC analysis information

Note 1: All conformance classes include geometric entities to represent locations, connect points, and reference geometry, e.g, centrelines. These geometric entities are specified in the mapping tables

© ISO 2001 — All rights reserved

Table 2 specifies which units of functionality participate in specific conformance classes. An “X” indicates that all ARM entities in the unit of functionality are included in the conformance class. An option, “P”, “S”, or “R”, for a unit of functionality, also indicates that all the ARM entities are included. A shape representation option, “A”, “B”, “C”, indicates that specific geometry and topology entities defined in Table 3 are included in the conformance class.

Table 3 explicitly specifies which AIM entities participate in specific conformance classes. Since specific change objects apply to specific ARM entities, Table 3 also defines which change objects are required within a given conformance class.

© ISO 2001 — All rights reserved

Table 3 - Conformance class (1 –9) elements

AIM element	Conformance class								
	1	2	3	4	5	6	7	8	9
action	X	X	X	X	X	X	X	X	X
action_assignment	X	X	X	X	X	X	X	X	X
action_directive	X	X	X	X	X	X	X	X	X
action_method	R	R	R	R	R	R	R	R	R
action_method_relationship	-	-	-	-	-	-	-	-	-
action_relationship	R	R	R	R	R	R	R	R	R
action_request_assignment	X	X	X	X	X	X	X	X	X
action_request_solution	R	R	R	R	R	R	R	R	R
action_request_status	X	X	X	X	X	X	X	X	X
action_status	R	R	R	R	R	R	R	R	R
amount_of_substance_measure_with_unit	X	X	X	X	X	X	X	X	X
amount_of_substance_unit	X	X	X	X	X	X	X	X	X
angular_location	X	X	X	X	X	X	X	X	X
application_context	X	X	X	X	X	X	X	X	X
application_context_element	X	X	X	X	X	X	X	X	X
application_protocol_definition	X	X	X	X	X	X	X	X	X
applied_action_request_assignment	X	X	X	X	X	X	X	X	X
applied_approval_assignment	X	X	X	X	X	X	X	X	X
applied_classification_assignment	X	X	X	X	X	X	X	X	X
applied_date_and_time_assignment	X	X	X	X	X	X	X	X	X
applied_date_assignment	X	X	X	X	X	X	X	X	X
applied_document_reference	X	X	X	X	X	X	X	X	X
applied_identification_assignment	X	X	X	X	X	X	X	X	X
approval	P, R	P, R	P, R	P, R	P, R	P, R	P, R	P, R	P, R
approval_assignment	P, R	P, R	P, R	P, R	P, R	P, R	P, R	P, R	P, R
approval_date_time	R	R	R	R	R	R	R	R	R
approval_person_organization	R	R	R	R	R	R	R	R	R
approval_role	R	R	R	R	R	R	R	R	R
approval_status	P	P	P	P	P	P	P	P	P
assembly_component_usage	X	X	X	X	X	X	X	X	X
axis1_placement	X	X	X	X	X	X	X	X	X
axis2_placement_2d	X	X	X	X	X	X	X	X	X
axis2_placement_3d	X	X	X	X	X	X	X	X	X

© ISO 2001 — All rights reserved

Table 3 - Conformance class (1 –9) elements cont'd.

AIM element	Conformance class								
	1	**2**	**3**	**4**	**5**	**6**	**7**	**8**	**9**
b_spline_curve	X	X	X	X	X	X	X	X	X
b_spline_curve_with_knots	X	X	X	X	X	X	X	X	X
b_spline_surface	S	A,C,S	A,C,S	A,C,S	A,C,S	A,C,S	A,C,S	A,C,S	A,C,S
b_spline_surface_with_knots	S	A,C,S	A,C,S	A,C,S	A,C,S	A,C,S	A,C,S	A,C,S	A,C,S
bezier_curve	X	X	X	X	X	X	X	X	X
bezier_surface	S	A,C,S	A,C,S	A,C,S	A,C,S	A,C,S	A,C,S	A,C,S	A,C,S
blank_fitting_class	X	X	X	X	X	-	-	-	X
block	-	B,C	B,C	B,C	B,C	-	B,C	B,C	-
bolt_and_nut_component_class	X	X	X	X	X	X	X	X	X
bolt_and_nut_component_definition	X	X	X	X	X	X	X	X	X
bolt_and_nut_set_definition	X	X	X	X	X	X	X	X	X
boolean_result	-	B,C	B,C	B,C	B,C	-	B,C	B,C	-
boundary_curve	S	A,C,S	A,C,S	A,C,S	A,C,S	A,C,S	A,C,S	A,C,S	A,C,S
bounded_curve	X	X	X	X	X	X	X	X	X
bounded_pcurve	S	A,C,S	A,C,S	A,C,S	A,C,S	A,C,S	A,C,S	A,C,S	A,C,S
bounded_surface	S	A,C,S	A,C,S	A,C,S	A,C,S	A,C,S	A,C,S	A,C,S	A,C,S
bounded_surface_curve	S	A,C,S	A,C,S	A,C,S	A,C,S	A,C,S	A,C,S	A,C,S	A,C,S
brep_with_voids	-	A,C	A,C	A,C	A,C	A,C	A,C	A,C	A,C
cableway_component_class	-	-	X	-	-	-	-	X	-
cableway_component_definition	-	-	X	-	-	-	-	X	-
cableway_connector_class	-	-	X	-	-	-	-	X	-
cableway_system	P	P	X	P	P	P	P	X	P
calendar_date	X	X	X	X	X	X	X	X	X
cartesian_point	X	X	X	X	X	X	X	X	X
cartesian_transformation_operator	X	X	X	X	X	X	X	X	X
cartesian_transformation_operator_3d	X	X	X	X	X	X	X	X	X
catalogue	X	X	X	X	X	X	X	X	X
catalogue_connector	X	X	X	X	X	X	X	X	X
catalogue_item	X	X	X	X	X	X	X	X	X
centre_of_symmetry	X	X	X	X	X	X	X	X	X
change_action	R	R	R	R	R	R	R	R	R
change_item_id_assignment	R	R	R	R	R	R	R	R	R
change_life_cycle_stage_assignment	R	R	R	R	R	R	R	R	R
characterized_object	X	X	X	X	X	X	X	X	X
circle	X	X	X	X	X	X	X	X	X

© ISO 2001 — All rights reserved

Table 3 - Conformance class (1 –9) elements cont'd.

AIM element	Conformance class								
	1	**2**	**3**	**4**	**5**	**6**	**7**	**8**	**9**
clamp_component_definition	X	X	X	X	X	X	X	X	X
clamp_set_definition	X	X	X	X	X	X	X	X	X
classification_assignment	X	X	X	X	X	X	X	X	X
classification_role	X	X	X	X	X	X	X	X	X
closed_shell	S	A,C,S	A,C,S	A,C,S	A,C,S	A,C,S	A,C,S	A,C,S	A,C,S
colour	X	X	X	X	X	X	X	X	X
colour_rgb	X	X	X	X	X	X	X	X	X
colour_specification	X	X	X	X	X	X	X	X	X
composite_curve	X	X	X	X	X	X	X	X	X
composite_curve_on_surface	S	A,C,S	A,C,S	A,C,S	A,C,S	A,C,S	A,C,S	A,C,S	A,C,S
composite_curve_segment	X	X	X	X	X	X	X	X	X
conic	X	X	X	X	X	X	X	X	X
conical_surface	S	A,C,S	A,C,S	A,C,S	A,C,S	A,C,S	A,C,S	A,C,S	A,C,S
connected_face_set	S	A,C,S	A,C,S	A,C,S	A,C,S	A,C,S	A,C,S	A,C,S	A,C,S
connection_functional_class	X	X	X	X	X	X	X	X	X
connection_material_definition	X	X	X	X	X	X	X	X	X
connection_motion_class	X	X	X	X	X	X	X	X	X
connection_node	X	X	X	-	-	-	-	-	X
connector_end_type_class	X	X	X	X	X	X	X	X	X
context_dependent_unit	X	X	X	X	X	X	X	X	X
conversion_based_unit	X	X	X	X	X	X	X	X	X
coordinated_universal_time_offset	X	X	X	X	X	X	X	X	X
csg_solid	-	B,C	B,C	B,C	B,C	-	B,C	B,C	-
curve	X	X	X	X	X	X	X	X	X
curve_bounded_surface	S	A,C,S	A,C,S	A,C,S	A,C,S	A,C,S	A,C,S	A,C,S	A,C,S
curve_replica	X	X	X	X	X	X	X	X	X
cyclide_segment_solid	-	B,C	B,C	B,C	B,C	-	B,C	B,C	-
cylindrical_surface	S	A,C,S	A,C,S	A,C,S	A,C,S	A,C,S	A,C,S	A,C,S	A,C,S
data_environment	-	-	-	-	X	-	-	-	-
date	X	X	X	X	X	X	X	X	X
date_and_time	X	X	X	X	X	X	X	X	X
date_and_time_assignment	X	X	X	X	X	X	X	X	X
date_assignment	X	X	X	X	X	X	X	X	X
date_role	X	X	X	X	X	X	X	X	X
date_time_role	X	X	X	X	X	X	X	X	X
definitional_representation	X	X	X	X	X	X	X	X	X

© ISO 2001 — All rights reserved

Table 3 - Conformance class (1 –9) elements cont'd.

AIM element	Conformance class								
	1	2	3	4	5	6	7	8	9
degenerate_pcurve	S	A,C,S	A,C,S	A,C,S	A,C,S	A,C,S	A,C,S	A,C,S	A,C,S
degenerate_toroidal_surface	S	A,C,S	A,C,S	A,C,S	A,C,S	A,C,S	A,C,S	A,C,S	A,C,S
derived_shape_aspect	X	X	X	X	X	X	X	X	X
derived_unit	X	X	X	X	X	X	X	X	X
derived_unit_element	X	X	X	X	X	X	X	X	X
description_attribute	-	-	-	-	-	-	-	-	-
descriptive_colour	X	X	X	X	X	X	X	X	X
descriptive_representation_item	X	X	X	X	X	X	X	X	X
design_project	X	X	X	X	X	X	X	X	X
design_project_assignment	X	X	X	X	X	X	X	X	X
dimensional_characteristic_representation	X	X	X	X	X	X	X	X	X
dimensional_exponents	X	X	X	X	X	X	X	X	X
dimensional_location	X	X	X	X	X	X	X	X	X
dimensional_size	X	X	X	X	X	X	X	X	X
directed_action	X	X	X	X	X	X	X	X	X
direction	X	X	X	X	X	X	X	X	X
document	X	X	X	X	X	X	X	X	X
document_reference	X	X	X	X	X	X	X	X	X
document_relationship	X	X	X	X	X	X	X	X	X
document_representation_type	-	-	-	-	-	-	-	-	-
document_type	X	X	X	X	X	X	X	X	X
document_usage_constraint	X	X	X	X	X	X	X	X	X
ducting_system	P	P	P	P	P	P	P	P	P
eccentric_cone	-	B,C	B,C	B,C	B,C	-	B,C	B,C	-
edge	S	A,C,S	A,C,S	A,C,S	A,C,S	A,C,S	A,C,S	A,C,S	A,C,S
edge_curve	S	A,C,S	A,C,S	A,C,S	A,C,S	A,C,S	A,C,S	A,C,S	A,C,S
edge_loop	S	A,C,S	A,C,S	A,C,S	A,C,S	A,C,S	A,C,S	A,C,S	A,C,S
elbow_fitting_class	X	X	X	X	X	-	-	-	X
electric_current_measure_with_unit	X	X	X	X	X	X	X	X	X
electric_current_unit	X	X	X	X	X	X	X	X	X
electrical_connector_class	X	X	X	X	X	X	X	X	X
electrical_system	P	P	P	P	P	P	P	P	P
elementary_surface	S	A,C,S	A,C,S	A,C,S	A,C,S	A,C,S	A,C,S	A,C,S	A,C,S
ellipse	X	X	X	X	X	X	X	X	X
ellipsoid	-	B,C	B,C	B,C	B,C	-	B,C	B,C	-
evaluated_degenerate_pcurve	S	A,C,S	A,C,S	A,C,S	A,C,S	A,C,S	A,C,S	A,C,S	A,C,S
executed_action	X	X	X	X	X	X	X	X	X
external_source	X	X	X	X	X	X	X	X	X
externally_defined_class	X	X	X	X	X	X	X	X	X
externally_defined_document	P	P	P	P	P	P	P	P	P

© ISO 2001 — All rights reserved

Table 3 - Conformance class (1 –9) elements cont'd.

AIM element	Conformance class								
	1	2	3	4	5	6	7	8	9
externally_defined_item	X	X	X	X	X	X	X	X	X
externally_defined_item_relationship	-	-	-	-	-	-	-	-	-
externally_defined_plant_item_definition	X	X	X	X	X	X	X	X	X
externally_defined_representation_item	X	X	X	X	X	X	X	X	X
extruded_area_solid	-	A,C	A,C	A,C	A,C	A,C	A,C	A,C	A,C
extruded_face_solid	-	A,C	A,C	A,C	A,C	A,C	A,C	A,C	A,C
face	S	A,C,S	A,C,S	A,C,S	A,C,S	A,C,S	A,C,S	A,C,S	A,C,S
face_bound	S	A,C,S	A,C,S	A,C,S	A,C,S	A,C,S	A,C,S	A,C,S	A,C,S
face_outer_bound	S	A,C,S	A,C,S	A,C,S	A,C,S	A,C,S	A,C,S	A,C,S	A,C,S
face_surface	S	A,C,S	A,C,S	A,C,S	A,C,S	A,C,S	A,C,S	A,C,S	A,C,S
faceted_brep	-	A,C	A,C	A,C	A,C	A,C	A,C	A,C	A,C
flange_fitting_class	X	X	X	X	X	-	-	-	X
flange_fitting_neck_type_class	X	X	X	X	X	-	-	-	X
founded_item	X	X	X	X	X	X	X	X	X
functionally_defined_transformation	X	X	X	X	X	X	X	X	X
geometric_curve_set	X	X	X	X	X	X	X	X	X
geometric_representation_context	X	X	X	X	X	X	X	X	X
geometric_representation_item	X	X	X	X	X	X	X	X	X
geometric_set	X	X	X	X	X	X	X	X	X
geometric_set_replica	X	X	X	X	X	X	X	X	X
global_unit_assigned_context	X	X	X	X	X	X	X	X	X
group	X	X	X	X	X	X	X	X	X
group_assignment	X	X	X	X	X	X	X	X	X
group_relationship	X	X	X	X	X	X	X	X	X
half_space_solid	-	B,C	B,C	B,C	B,C	-	B,C	B,C	-
heat_tracing_representation	X	X	X	X	X	X	X	X	X
hvac_branch_connection	-	-	X	-	-	X	X	-	X
hvac_component_definition	-	-	X	-	-	X	X	-	X
hvac_connector	-	-	X	-	-	X	X	-	X
hvac_cross_section	-	-	X	-	-	X	X	-	X
hvac_fitting_class	-	-	X	-	-	X	X	-	X
hvac_plant_item_branch_connection	-	-	X	-	-	X	X	-	X
hvac_plant_item_connection	-	-	X	-	-	X	X	-	X
hvac_section_segment_definition	-	-	X	-	-	X	X	-	X
hvac_section_segment_termination	-	-	X	-	-	X	X	-	X
hvac_system	P	P	P	P	P	P	P	P	P
hvac_system_section_definition	-	-	X	-	-	X	X	-	X
hvac_termination_connection	-	-	X	-	-	X	X	-	X
hybrid_shape_representation	-	A,C	A,C	A,C	A,C	A,C	A,C	A,C	A,C
hyperbola	X	X	X	X	X	X	X	X	X

© ISO 2001 — All rights reserved

Table 3 - Conformance class (1 –9) elements cont'd.

AIM element	Conformance class								
	1	2	3	4	5	6	7	8	9
id_attribute	-	-	-	-	-	-	-	-	-
identification_assignment	X	X	X	X	X	X	X	X	X
identification_role	X	X	X	X	X	X	X	X	X
inline_equipment	X	X	X	X	X	-	-	-	X
instrumentation_and_control_system	P	P	P	P	P	P	P	P	P
interfering_shape_element	X	X	X	X	X	X	X	X	X
intersection_curve	S	A,C,S	A,C,S	A,C,S	A,C,S	A,C,S	A,C,S	A,C,S	A,C,S
item_identified_representation_usage	X	X	X	X	X	X	X	X	X
known_source	X	X	X	X	X	X	X	X	X
length_measure_with_unit	X	X	X	X	X	X	X	X	X
length_unit	X	X	X	X	X	X	X	X	X
line	X	X	X	X	X	X	X	X	X
line_branch_connection	X	X	X	-	-	-	-	-	X
line_less_piping_system	P	P	P	P	P	P	P	P	P
line_plant_item_branch_connection	X	X	X	-	-	-	-	-	X
line_plant_item_connection	X	X	X	-	-	-	-	-	X
line_termination_connection	X	X	X	-	-	-	-	-	X
local_time	X	X	X	X	X	X	X	X	X
loop	S	A,C,S	A,C,S	A,C,S	A,C,S	A,C,S	A,C,S	A,C,S	A,C,S
luminous_intensity_measure_with_unit	X	X	X	X	X	X	X	X	X
luminous_intensity_unit	X	X	X	X	X	X	X	X	X
make_from_usage_option	X	X	X	X	X	X	X	X	X
manifold_solid_brep	-	A,C	A,C	A,C	A,C	A,C	A,C	A,C	A,C
mapped_item	X	X	X	X	X	X	X	X	X
mass_measure_with_unit	X	X	X	X	X	X	X	X	X
mass_unit	X	X	X	X	X	X	X	X	X
material_designation	X	X	X	X	X	X	X	X	X
material_designation_characterization	X	X	X	X	X	X	X	X	X
material_property	X	X	X	X	X	X	X	X	X
material_property_representation	X	X	X	X	X	X	X	X	X
measure_representation_item	X	X	X	X	X	X	X	X	X
measure_with_unit	X	X	X	X	X	X	X	X	X
name_assignment	R	R	R	R	R	R	R	R	R
name_attribute	-	-	-	-	-	-	-	-	-
named_unit	X	X	X	X	X	X	X	X	X
object_role	R	R	R	R	R	R	R	R	R
offset_curve_2d	X	X	X	X	X	X	X	X	X
offset_curve_3d	X	X	X	X	X	X	X	X	X
offset_surface	S	A,C,S	A,C,S	A,C,S	A,C,S	A,C,S	A,C,S	A,C,S	A,C,S
open_shell	S	A,C,S	A,C,S	A,C,S	A,C,S	A,C,S	A,C,S	A,C,S	A,C,S

© ISO 2001 — All rights reserved

Table 3 - Conformance class (1 –9) elements cont'd.

AIM element	Conformance class								
	1	2	3	4	5	6	7	8	9
organization	X	X	X	X	X	X	X	X	X
organization_assignment	X	X	X	X	X	X	X	X	X
organization_role	X	X	X	X	X	X	X	X	X
organizational_project	X	X	X	X	X	X	X	X	X
oriented_closed_shell	S	A,C,S	A,C,S	A,C,S	A,C,S	A,C,S	A,C,S	A,C,S	A,C,S
oriented_edge	S	A,C,S	A,C,S	A,C,S	A,C,S	A,C,S	A,C,S	A,C,S	A,C,S
oriented_face	S	A,C,S	A,C,S	A,C,S	A,C,S	A,C,S	A,C,S	A,C,S	A,C,S
oriented_open_shell	S	A,C,S	A,C,S	A,C,S	A,C,S	A,C,S	A,C,S	A,C,S	A,C,S
oriented_path	S	A,C,S	A,C,S	A,C,S	A,C,S	A,C,S	A,C,S	A,C,S	A,C,S
outer_boundary_curve	S	A,C,S	A,C,S	A,C,S	A,C,S	A,C,S	A,C,S	A,C,S	A,C,S
parabola	X	X	X	X	X	X	X	X	X
parametric_representation_context	S	A,C,S	A,C,S	A,C,S	A,C,S	A,C,S	A,C,S	A,C,S	A,C,S
path	S	A,C,S	A,C,S	A,C,S	A,C,S	A,C,S	A,C,S	A,C,S	A,C,S
pcurve	S	A,C,S	A,C,S	A,C,S	A,C,S	A,C,S	A,C,S	A,C,S	A,C,S
person	X	X	X	X	X	X	X	X	X
person_and_organization	X	X	X	X	X	X	X	X	X
person_and_organization_assignment	X	X	X	X	X	X	X	X	X
person_and_organization_role	X	X	X	X	X	X	X	X	X
person_assignment	X	X	X	X	X	X	X	X	X
person_role	X	X	X	X	X	X	X	X	X
pipe_class	X	X	X	X	X	-	-	-	X
pipe_closure_fitting_class	X	X	X	X	X	-	-	-	X
piping_component_class	X	X	X	X	X	-	-	-	X
piping_component_definition	X	X	X	X	X	X	X	X	X
piping_connector_class	X	X	X	X	X	-	-	-	X
piping_spool_definition	X	X	X	X	X	-	-	-	X
piping_support_definition	X	X	X	X	X	-	-	-	X
piping_support_fitting_class	X	X	X	X	X	-	-	-	X
piping_system	P	P	P	P	P	P	P	P	P
placement	X	X	X	X	X	X	X	X	X
plane	S	A,C,S	A,C,S	A,C,S	A,C,S	A,C,S	A,C,S	A,C,S	A,C,S
plane_angle_measure_with_unit	X	X	X	X	X	X	X	X	X
plane_angle_unit	X	X	X	X	X	X	X	X	X
plant	P	P	P	P	P	P	P	P	P
plant_csg_shape_representation	-	B,C	B,C	B,C	B,C	-	B,C	B,C	-
plant_design_csg_primitive	-	B,C	B,C	B,C	B,C	-	B,C	B,C	-
plant_item_connection	X	X	X	X	X	X	X	X	X
plant_item_connector	X	X	X	X	X	X	X	X	X
plant_item_interference	X	X	X	X	X	X	X	X	X
plant_item_route	X	X	X	X	X	X	X	X	X

© ISO 2001 — All rights reserved

Table 3 - Conformance class (1 –9) elements cont'd.

AIM element	Conformance class								
	1	2	3	4	5	6	7	8	9
plant_item_weight_representation	X	X	X	X	X	X	X	X	X
plant_line_definition	X	X	X	-	-	-	-	-	X
plant_line_segment_definition	X	X	X	-	-	-	-	-	X
plant_line_segment_termination	X	X	X	-	-	-	-	-	X
plant_spatial_configuration_change_assignment	R	R	R	R	R	R	R	R	R
plant_spatial_configuration_organization_assignment	X	X	X	X	X	X	X	X	X
plant_spatial_configuration_person_and_organization_assignment	P,S,R	P,S,R	P,S,R	P,S,R	P,S,R	P,S,R	P,S,R	P,S,R	P,S,R
plant_spatial_configuration_person_assignment	X	X	X	X	X	X	X	X	X
point	X	X	X	X	X	X	X	X	X
point_on_curve	X	X	X	X	X	X	X	X	X
point_on_surface	S	A,C,S	A,C,S	A,C,S	A,C,S	A,C,S	A,C,S	A,C,S	A,C,S
point_replica	X	X	X	X	X	X	X	X	X
poly_loop	X	X	X	X	X	X	X	X	X
polyline	X	X	X	X	X	X	X	X	X
pre_defined_item	X	X	X	X	X	X	X	X	X
precision_qualifier	X	X	X	X	X	X	X	X	X
presentation_layer_assignment	X	X	X	X	X	X	X	X	X
process_capability	P	P	P	P	P	P	P	P	P
product	X	X	X	X	X	X	X	X	X
product_context	X	X	X	X	X	X	X	X	X
product_definition	X	X	X	X	X	X	X	X	X
product_definition_context	X	X	X	X	X	X	X	X	X
product_definition_formation	X	X	X	X	X	X	X	X	X
product_definition_formation_relationship	X	X	X	X	X	X	X	X	X
product_definition_formation_with_specified_source	X	X	X	X	X	X	X	X	X
product_definition_relationship	X	X	X	X	X	X	X	X	X
product_definition_shape	X	X	X	X	X	X	X	X	X
product_definition_substitute	X	X	X	X	X	X	X	X	X
product_definition_usage	X	X	X	X	X	X	X	X	X
product_definition_with_associated_documents	X	X	X	-	-	-	-	-	X
product_material_composition_relationship	X	X	X	X	X	X	X	X	X
property_definition	X	X	X	X	X	X	X	X	X
property_definition_relationship	X	X	X	X	X	X	X	X	X
property_definition_representation	X	X	X	X	X	X	X	X	X
purchase_assignment	X	X	X	X	X	X	X	X	X

© ISO 2001 — All rights reserved

Table 3 - Conformance class (1 –9) elements cont'd.

AIM element	Conformance class								
	1	2	3	4	5	6	7	8	9
qualified_representation_item	X	X	X	X	X	X	X	X	X
quasi_uniform_curve	X	X	X	X	X	X	X	X	X
quasi_uniform_surface	S	A,C,S	A,C,S	A,C,S	A,C,S	A,C,S	A,C,S	A,C,S	A,C,S
ratio_measure_with_unit	X	X	X	X	X	X	X	X	X
ratio_unit	X	X	X	X	X	X	X	X	X
rational_b_spline_curve	X	X	X	X	X	X	X	X	X
rational_b_spline_surface	S	A,C,S	A,C,S	A,C,S	A,C,S	A,C,S	A,C,S	A,C,S	A,C,S
rectangular_composite_surface	S	A,C,S	A,C,S	A,C,S	A,C,S	A,C,S	A,C,S	A,C,S	A,C,S
rectangular_pyramid	-	B,C	B,C	B,C	B,C	-	B,C	B,C	-
rectangular_trimmed_surface	S	A,C,S	A,C,S	A,C,S	A,C,S	A,C,S	A,C,S	A,C,S	A,C,S
reducer_fitting_class	X	X	X	X	X	-	-	-	X
reference_geometry	X	X	X	X	X	X	X	X	X
reinforcing_component_definition	X	X	X	X	X	-	-	-	X
reparametrised_composite_curve_segment	X	X	X	X	X	X	X	X	X
representation	X	X	X	X	X	X	X	X	X
representation_context	X	X	X	X	X	X	X	X	X
representation_item	X	X	X	X	X	X	X	X	X
representation_item_relationship	X	X	X	X	X	X	X	X	X
representation_map	X	X	X	X	X	X	X	X	X
required_material_property	X	X	X	X	X	X	X	X	X
reserved_space	X	X	X	X	X	X	X	X	X
revolved_area_solid	-	A,C	A,C	A,C	A,C	A,C	A,C	A,C	A,C
revolved_face_solid	-	A,C	A,C	A,C	A,C	A,C	A,C	A,C	A,C
right_angular_wedge	-	B,C	B,C	B,C	B,C	-	B,C	B,C	-
right_circular_cone	-	B,C	B,C	B,C	B,C	-	B,C	B,C	-
right_circular_cylinder	-	B,C	B,C	B,C	B,C	-	B,C	B,C	-
role_association	R	R	R	R	R	R	R	R	R
seam_curve	S	A,C,S	A,C,S	A,C,S	A,C,S	A,C,S	A,C,S	A,C,S	A,C,S
shape_aspect	X	X	X	X	X	X	X	X	X
shape_aspect_deriving_relationship	X	X	X	X	X	X	X	X	X
shape_aspect_relationship	X	X	X	X	X	X	X	X	X
shape_definition_representation	X	X	X	X	X	X	X	X	X
shape_dimension_representation	X	X	X	X	X	X	X	X	X
shape_representation	X	X	X	X	X	X	X	X	X
shell_based_wireframe_model	-	A,C	A,C	A,C	A,C	A,C	A,C	A,C	A,C
si_unit	X	X	X	X	X	X	X	X	X
site	S	S	S	S	S	S	S	S	S
site_building	S	S	S	S	S	S	S	S	S
site_feature	S	S	S	S	S	S	S	S	S
site_representation	S	S	S	S	S	S	S	S	S

© ISO 2001 — All rights reserved

Table 3 - Conformance class (1 –9) elements cont'd.

AIM element	Conformance class								
	1	**2**	**3**	**4**	**5**	**6**	**7**	**8**	**9**
sited_plant	S	S	S	S	S	S	S	S	S
solid_angle_measure_with_unit	X	X	X	X	X	X	X	X	X
solid_angle_unit	X	X	X	X	X	X	X	X	X
solid_model	-	B,C	B,C	B,C	B,C	-	B,C	B,C	-
spacer_fitting_class	X	X	X	X	X	-	-	-	X
specialty_item_class	X	X	X	X	X	-	-	-	X
sphere	-	B,C	B,C	B,C	B,C	-	B,C	B,C	-
spherical_surface	S	A,C,S	A,C,S	A,C,S	A,C,S	A,C,S	A,C,S	A,C,S	A,C,S
stream_design_case	X	X	X	-	-	X	X	-	X
stream_phase	X	X	X	-	-	-	-	-	X
structural_load_connector_class	X	X	X	X	X	X	X	X	X
structural_system	P	P	P	P	P	P	P	P	P
support_constraint_representation	X	X	X	X	X	X	X	X	X
surface	S	A,C,S	A,C,S	A,C,S	A,C,S	A,C,S	A,C,S	A,C,S	A,C,S
surface_curve	S	A,C,S	A,C,S	A,C,S	A,C,S	A,C,S	A,C,S	A,C,S	A,C,S
surface_of_linear_extrusion	S	A,C,S	A,C,S	A,C,S	A,C,S	A,C,S	A,C,S	A,C,S	A,C,S
surface_of_revolution	S	A,C,S	A,C,S	A,C,S	A,C,S	A,C,S	A,C,S	A,C,S	A,C,S
surface_patch	S	A,C,S	A,C,S	A,C,S	A,C,S	A,C,S	A,C,S	A,C,S	A,C,S
surface_replica	S	A,C,S	A,C,S	A,C,S	A,C,S	A,C,S	A,C,S	A,C,S	A,C,S
swage_fitting_class	X	X	X	X	X	-	-	-	X
swept_area_solid	-	A,C	A,C	A,C	A,C	A,C	A,C	A,C	A,C
swept_face_solid	-	A,C	A,C	A,C	A,C	A,C	A,C	A,C	A,C
swept_surface	S	A,C,S	A,C,S	A,C,S	A,C,S	A,C,S	A,C,S	A,C,S	A,C,S
symmetric_shape_aspect	X	X	X	X	X	X	X	X	X
system_class	P	P	P	P	P	P	P	P	P
system_space	X	X	X	X	X	X	X	X	X
thermodynamic_temperature_measure_with_unit	X	X	X	X	X	X	X	X	X
thermodynamic_temperature_unit	X	X	X	X	X	X	X	X	X
time_measure_with_unit	X	X	X	X	X	X	X	X	X
time_unit	X	X	X	X	X	X	X	X	X
topological_representation_item	S	A,C,S	A,C,S	A,C,S	A,C,S	A,C,S	A,C,S	A,C,S	A,C,S
toroidal_surface	S	A,C,S	A,C,S	A,C,S	A,C,S	A,C,S	A,C,S	A,C,S	A,C,S
torus	-	B,C	B,C	B,C	B,C	-	B,C	B,C	-
trimmed_curve	X	X	X	X	X	X	X	X	X
type_qualifier	X	X	X	X	X	X	X	X	X
uniform_curve	X	X	X	X	X	X	X	X	X
uniform_surface	S	A,C,S	A,C,S	A,C,S	A,C,S	A,C,S	A,C,S	A,C,S	A,C,S
valve_class	X	X	X	X	X	-	-	-	X
vector	X	X	X	X	X	X	X	X	X

© ISO 2001 — All rights reserved

Table 3 - Conformance class (1 –9) elements cont'd.

AIM element	Conformance class								
	1	**2**	**3**	**4**	**5**	**6**	**7**	**8**	**9**
versioned_action_request	X	X	X	X	X	X	X	X	X
vertex	S	A,C,S	A,C,S	A,C,S	A,C,S	A,C,S	A,C,S	A,C,S	A,C,S
vertex_loop	S	A,C,S	A,C,S	A,C,S	A,C,S	A,C,S	A,C,S	A,C,S	A,C,S
vertex_point	S	A,C,S	A,C,S	A,C,S	A,C,S	A,C,S	A,C,S	A,C,S	A,C,S
vertex_shell	S	A,C,S	A,C,S	A,C,S	A,C,S	A,C,S	A,C,S	A,C,S	A,C,S
wire_shell	-	A,C	A,C	A,C	A,C	A,C	A,C	A,C	A,C

© ISO 2001 — All rights reserved

Annex A
(normative)

AIM EXPRESS expanded listing

The following EXPRESS is the expanded form of the short form schema given in 5.2. In the event of any discrepancy between the short form and this expanded listing, the expanded listing shall be used.

```
*)

SCHEMA plant_spatial_configuration;

  CONSTANT
  dummy_gri : geometric_representation_item := representation_item('') ||
              geometric_representation_item();
  dummy_tri : topological_representation_item := representation_item('')
              || topological_representation_item();
  END_CONSTANT;

  TYPE action_request_item = SELECT
    (product);
  END_TYPE; -- action_request_item

  TYPE ahead_or_behind = ENUMERATION OF
    (ahead,
     exact,
     behind);
  END_TYPE; -- ahead_or_behind

  TYPE amount_of_substance_measure = REAL;
  END_TYPE; -- amount_of_substance_measure

  TYPE angle_relator = ENUMERATION OF
    (equal,
     large,
     small);
  END_TYPE; -- angle_relator

  TYPE approval_item = SELECT
    (change_action,
     piping_system,
     versioned_action_request);
  END_TYPE; -- approval_item

  TYPE area_measure = REAL;
  END_TYPE; -- area_measure

  TYPE axis2_placement = SELECT
```

© ISO 2001 — All rights reserved

```
  (axis2_placement_2d,
   axis2_placement_3d);
END_TYPE; -- axis2_placement

TYPE b_spline_curve_form = ENUMERATION OF
  (polyline_form,
   circular_arc,
   elliptic_arc,
   parabolic_arc,
   hyperbolic_arc,
   unspecified);
END_TYPE; -- b_spline_curve_form

TYPE b_spline_surface_form = ENUMERATION OF
  (plane_surf,
   cylindrical_surf,
   conical_surf,
   spherical_surf,
   toroidal_surf,
   surf_of_revolution,
   ruled_surf,
   generalised_cone,
   quadric_surf,
   surf_of_linear_extrusion,
   unspecified);
END_TYPE; -- b_spline_surface_form

TYPE boolean_operand = SELECT
  (solid_model,
   half_space_solid,
   csg_primitive,
   boolean_result);
END_TYPE; -- boolean_operand

TYPE boolean_operator = ENUMERATION OF
  (union,
   intersection,
   difference);
END_TYPE; -- boolean_operator

TYPE change_item = SELECT
  (assembly_component_usage,
   axis2_placement_2d,
   axis2_placement_3d,
   document,
   ducting_system,
   electrical_system,
   externally_defined_plant_item_definition,
   instrumentation_and_control_system,
   line_branch_connection,
   line_plant_item_branch_connection,
```

 © ISO 2001 — All rights reserved

```
   line_plant_item_connection,
   line_termination_connection,
   piping_system,
   plant,
   plant_item_connection,
   plant_item_connector,
   plant_line_definition,
   plant_line_segment_definition,
   plant_line_segment_termination,
   process_capability,
   product,
   product_definition,
   product_definition_relationship,
   product_definition_shape,
   property_definition,
   reference_geometry,
   site,
   site_feature,
   sited_plant,
   structural_system);
END_TYPE; -- change_item

TYPE change_life_cycle_item = SELECT
  (directed_action);
END_TYPE; -- change_life_cycle_item

TYPE characterized_definition = SELECT
  (characterized_object,
   characterized_product_definition,
   shape_definition);
END_TYPE; -- characterized_definition

TYPE characterized_material_property = SELECT
  (material_property_representation,
   product_material_composition_relationship);
END_TYPE; -- characterized_material_property

TYPE characterized_product_definition = SELECT
  (product_definition,
   product_definition_relationship);
END_TYPE; -- characterized_product_definition

TYPE classification_item = SELECT
  (cableway_system,
   ducting_system,
   electrical_system,
   hvac_component_definition,
   hvac_connector,
   instrumentation_and_control_system,
   piping_component_definition,
   piping_system,
   plant_item_connection,
   plant_item_connector,
   applied_document_reference,
```

© ISO 2001 — All rights reserved

```
    product,
    product_definition,
    structural_system);
  END_TYPE; -- classification_item

  TYPE context_dependent_measure = REAL;
  END_TYPE; -- context_dependent_measure

  TYPE count_measure = NUMBER;
  END_TYPE; -- count_measure

  TYPE csg_primitive = SELECT
    (sphere,
     ellipsoid,
     block,
     right_angular_wedge,
     rectangular_pyramid,
     torus,
     right_circular_cone,
     eccentric_cone,
     right_circular_cylinder,
     cyclide_segment_solid);
  END_TYPE; -- csg_primitive

  TYPE csg_select = SELECT
    (boolean_result,
     csg_primitive);
  END_TYPE; -- csg_select

  TYPE curve_on_surface = SELECT
    (pcurve,
     surface_curve,
     composite_curve_on_surface);
  END_TYPE; -- curve_on_surface

  TYPE date_and_time_item = SELECT
    (change_action,
     change_item,
     change_life_cycle_stage_assignment,
     product);
  END_TYPE; -- date_and_time_item

  TYPE date_time_or_event_occurrence = SELECT
    (date_time_select);
  END_TYPE; -- date_time_or_event_occurrence

  TYPE date_time_select = SELECT
    (date,
     local_time,
     date_and_time);
  END_TYPE; -- date_time_select
```

 © ISO 2001 — All rights reserved

```
TYPE dated_item = SELECT
  (action_directive,
   change_action,
   change_item,
   product);
END_TYPE; -- dated_item

TYPE day_in_month_number = INTEGER;
WHERE
  wr1: ((1 <= SELF) AND (SELF <= 31));
END_TYPE; -- day_in_month_number

TYPE derived_property_select = SELECT
  (property_definition);
END_TYPE; -- derived_property_select

TYPE description_attribute_select = SELECT
  (action_request_solution,
   application_context,
   approval_role,
   date_role,
   date_time_role,
   external_source,
   organization_role,
   person_and_organization_role,
   person_and_organization,
   person_role,
   property_definition_representation,
   representation);
END_TYPE; -- description_attribute_select

TYPE design_project_item = SELECT
  (product_definition);
END_TYPE; -- design_project_item

TYPE dimension_count = INTEGER;
WHERE
  wr1: (SELF > 0);
END_TYPE; -- dimension_count

TYPE dimensional_characteristic = SELECT
  (dimensional_location,
   dimensional_size);
END_TYPE; -- dimensional_characteristic

TYPE document_item = SELECT
  (externally_defined_plant_item_definition,
   heat_tracing_representation,
   material_property,
   piping_component_class,
   piping_system,
   plant_item_connector,
   plant_line_segment_definition,
```

© ISO 2001 — All rights reserved

```
    product,
    product_definition,
    product_definition_relationship,
    property_definition,
    representation,
    representation_item,
    site);
END_TYPE; -- document_item

TYPE electric_current_measure = REAL;
END_TYPE; -- electric_current_measure

TYPE founded_item_select = SELECT
  (founded_item,
    representation_item);
END_TYPE; -- founded_item_select

TYPE geometric_set_select = SELECT
  (point,
    curve,
    surface);
END_TYPE; -- geometric_set_select

TYPE hour_in_day = INTEGER;
WHERE
  wr1: ((0 <= SELF) AND (SELF < 24));
END_TYPE; -- hour_in_day

TYPE id_attribute_select = SELECT
  (action,
    property_definition,
    shape_aspect,
    shape_aspect_relationship,
    application_context,
    group,
    organizational_project,
    representation);
END_TYPE; -- id_attribute_select

TYPE identified_item = SELECT
  (document,
    material_property,
    product_definition,
    shape_aspect);
END_TYPE; -- identified_item

TYPE identifier = STRING;
END_TYPE; -- identifier

TYPE knot_type = ENUMERATION OF
  (uniform_knots,
```

 © ISO 2001 — All rights reserved

```
  quasi_uniform_knots,
  piecewise_bezier_knots,
  unspecified);
END_TYPE; -- knot_type

TYPE label = STRING;
END_TYPE; -- label

TYPE layered_item = SELECT
 (representation_item);
END_TYPE; -- layered_item

TYPE length_measure = REAL;
END_TYPE; -- length_measure

TYPE list_of_reversible_topology_item = LIST OF reversible_topology_item;
END_TYPE; -- list_of_reversible_topology_item

TYPE luminous_intensity_measure = REAL;
END_TYPE; -- luminous_intensity_measure

TYPE mass_measure = REAL;
END_TYPE; -- mass_measure

TYPE measure_value = SELECT
 (length_measure,
  mass_measure,
  time_measure,
  electric_current_measure,
  thermodynamic_temperature_measure,
  amount_of_substance_measure,
  luminous_intensity_measure,
  plane_angle_measure,
  solid_angle_measure,
  area_measure,
  volume_measure,
  ratio_measure,
  parameter_value,
  numeric_measure,
  context_dependent_measure,
  positive_length_measure,
  positive_plane_angle_measure,
  positive_ratio_measure,
  count_measure);
END_TYPE; -- measure_value

TYPE minute_in_hour = INTEGER;
WHERE
 wr1: ((0 <= SELF) AND (SELF <= 59));
END_TYPE; -- minute_in_hour

TYPE month_in_year_number = INTEGER;
WHERE
 wr1: ((1 <= SELF) AND (SELF <= 12));
```

© ISO 2001 — All rights reserved

```
END_TYPE; -- month_in_year_number

TYPE name_attribute_select = SELECT
  (action_request_solution,
   derived_unit,
   person_and_organization,
   product_definition,
   product_definition_substitute,
   property_definition_representation);
END_TYPE; -- name_attribute_select

TYPE numeric_measure = NUMBER;
END_TYPE; -- numeric_measure

TYPE parameter_value = REAL;
END_TYPE; -- parameter_value

TYPE pcurve_or_surface = SELECT
  (pcurve,
   surface);
END_TYPE; -- pcurve_or_surface

TYPE person_organization_select = SELECT
  (person,
   organization,
   person_and_organization);
END_TYPE; -- person_organization_select

TYPE plane_angle_measure = REAL;
END_TYPE; -- plane_angle_measure

TYPE plant_spatial_configuration_organization_item = SELECT
  (catalogue,
   change_action,
   design_project,
   document,
   plant,
   product_definition_formation,
   product_definition_relationship,
   representation,
   site);
END_TYPE; -- plant_spatial_configuration_organization_item

TYPE plant_spatial_configuration_person_and_organization_item = SELECT
  (change_item,
   plant,
   site);
END_TYPE; -- plant_spatial_configuration_person_and_organization_item

TYPE plant_spatial_configuration_person_item = SELECT
  (document,
```

 © ISO 2001 — All rights reserved

```
  plant,
  product_definition_relationship,
  representation,
  site);
END_TYPE; -- plant_spatial_configuration_person_item

TYPE positive_length_measure = length_measure;
WHERE
  wr1: (SELF > 0);
END_TYPE; -- positive_length_measure

TYPE positive_plane_angle_measure = plane_angle_measure;
WHERE
  wr1: (SELF > 0);
END_TYPE; -- positive_plane_angle_measure

TYPE positive_ratio_measure = ratio_measure;
WHERE
  wr1: (SELF > 0);
END_TYPE; -- positive_ratio_measure

TYPE preferred_surface_curve_representation = ENUMERATION OF
  (curve_3d,
   pcurve_s1,
   pcurve_s2);
END_TYPE; -- preferred_surface_curve_representation

TYPE purchase_item = SELECT
  (product);
END_TYPE; -- purchase_item

TYPE ratio_measure = REAL;
END_TYPE; -- ratio_measure

TYPE represented_definition = SELECT
  (property_definition,
   property_definition_relationship,
   shape_aspect,
   shape_aspect_relationship);
END_TYPE; -- represented_definition

TYPE reversible_topology = SELECT
  (reversible_topology_item,
   list_of_reversible_topology_item,
   set_of_reversible_topology_item);
END_TYPE; -- reversible_topology

TYPE reversible_topology_item = SELECT
  (edge,
   path,
   face,
   face_bound,
   closed_shell,
   open_shell);
```

© ISO 2001 — All rights reserved

```
END_TYPE; -- reversible_topology_item

TYPE role_select = SELECT
  (action_assignment,
   action_request_assignment,
   approval_assignment,
   approval_date_time,
   document_reference,
   group_assignment,
   name_assignment);
END_TYPE; -- role_select

TYPE second_in_minute = REAL;
WHERE
  wr1: ((0 <= SELF) AND (SELF <= 60));
END_TYPE; -- second_in_minute

TYPE set_of_reversible_topology_item = SET OF reversible_topology_item;
END_TYPE; -- set_of_reversible_topology_item

TYPE shape_definition = SELECT
  (product_definition_shape,
   shape_aspect,
   shape_aspect_relationship);
END_TYPE; -- shape_definition

TYPE shell = SELECT
  (vertex_shell,
   wire_shell,
   open_shell,
   closed_shell);
END_TYPE; -- shell

TYPE si_prefix = ENUMERATION OF
  (exa,
   peta,
   tera,
   giga,
   mega,
   kilo,
   hecto,
   deca,
   deci,
   centi,
   milli,
   micro,
   nano,
   pico,
   femto,
   atto);
END_TYPE; -- si_prefix
```

 © ISO 2001 — All rights reserved

```
TYPE si_unit_name = ENUMERATION OF
  (metre,
   gram,
   second,
   ampere,
   kelvin,
   mole,
   candela,
   radian,
   steradian,
   hertz,
   newton,
   pascal,
   joule,
   watt,
   coulomb,
   volt,
   farad,
   ohm,
   siemens,
   weber,
   tesla,
   henry,
   degree_celsius,
   lumen,
   lux,
   becquerel,
   gray,
   sievert);
END_TYPE; -- si_unit_name

TYPE solid_angle_measure = REAL;
END_TYPE; -- solid_angle_measure

TYPE source = ENUMERATION OF
  (made,
   bought,
   not_known);
END_TYPE; -- source

TYPE source_item = SELECT
  (identifier);
END_TYPE; -- source_item

TYPE supported_item = SELECT
  (action_directive,
   action,
   action_method);
END_TYPE; -- supported_item

TYPE surface_boundary = SELECT
  (boundary_curve,
   degenerate_pcurve);
```

© ISO 2001 — All rights reserved

```
END_TYPE; -- surface_boundary

TYPE text = STRING;
END_TYPE; -- text

TYPE thermodynamic_temperature_measure = REAL;
END_TYPE; -- thermodynamic_temperature_measure

TYPE time_measure = REAL;
END_TYPE; -- time_measure

TYPE transformation = SELECT
  (functionally_defined_transformation);
END_TYPE; -- transformation

TYPE transition_code = ENUMERATION OF
  (discontinuous,
   continuous,
   cont_same_gradient,
   cont_same_gradient_same_curvature);
END_TYPE; -- transition_code

TYPE trimming_preference = ENUMERATION OF
  (cartesian,
   parameter,
   unspecified);
END_TYPE; -- trimming_preference

TYPE trimming_select = SELECT
  (cartesian_point,
   parameter_value);
END_TYPE; -- trimming_select

TYPE unit = SELECT
  (named_unit,
   derived_unit);
END_TYPE; -- unit

TYPE value_qualifier = SELECT
  (precision_qualifier,
   type_qualifier);
END_TYPE; -- value_qualifier

TYPE vector_or_direction = SELECT
  (vector,
   direction);
END_TYPE; -- vector_or_direction

TYPE volume_measure = REAL;
END_TYPE; -- volume_measure
```

 © ISO 2001 — All rights reserved

```
TYPE wireframe_model = SELECT
  (shell_based_wireframe_model);
END_TYPE; -- wireframe_model

TYPE year_number = INTEGER;
END_TYPE; -- year_number

ENTITY action;
    name          : label;
    description   : OPTIONAL text;
    chosen_method : action_method;
  DERIVE
    id : identifier := get_id_value(SELF);
  WHERE
    wr1: (SIZEOF(USEDIN(SELF,'PLANT_SPATIAL_CONFIGURATION.' +
            'ID_ATTRIBUTE.IDENTIFIED_ITEM')) <= 1);
END_ENTITY; -- action

ENTITY action_assignment
  ABSTRACT SUPERTYPE;
    assigned_action : action;
  DERIVE
    role : object_role := get_role(SELF);
  WHERE
    wr1: (SIZEOF(USEDIN(SELF,'PLANT_SPATIAL_CONFIGURATION.' +
            'ROLE_ASSOCIATION.ITEM_WITH_ROLE')) <= 1);
END_ENTITY; -- action_assignment

ENTITY action_directive;
    name        : label;
    description : OPTIONAL text;
    analysis    : text;
    comment     : text;
    requests    : SET [1:?] OF versioned_action_request;
END_ENTITY; -- action_directive

ENTITY action_method;
    name        : label;
    description : OPTIONAL text;
    consequence : text;
    purpose     : text;
END_ENTITY; -- action_method

ENTITY action_method_relationship;
    name            : label;
    description     : OPTIONAL text;
    relating_method : action_method;
    related_method  : action_method;
END_ENTITY; -- action_method_relationship

ENTITY action_relationship;
    name            : label;
    description     : OPTIONAL text;
    relating_action : action;
```

© ISO 2001 — All rights reserved

```
    related_action  : action;
  END_ENTITY; -- action_relationship

  ENTITY action_request_assignment
    ABSTRACT SUPERTYPE;
    assigned_action_request : versioned_action_request;
    DERIVE
    role : object_role := get_role(SELF);
    WHERE
    wr1: (SIZEOF(USEDIN(SELF,'PLANT_SPATIAL_CONFIGURATION.' +
            'ROLE_ASSOCIATION.ITEM_WITH_ROLE')) <= 1);
  END_ENTITY; -- action_request_assignment

  ENTITY action_request_solution;
    method  : action_method;
    request : versioned_action_request;
    DERIVE
    description : text := get_description_value(SELF);
    name        : label := get_name_value(SELF);
    WHERE
    wr1: (SIZEOF(USEDIN(SELF,'PLANT_SPATIAL_CONFIGURATION.' +
            'DESCRIPTION_ATTRIBUTE.DESCRIBED_ITEM')) <= 1);
    wr2: (SIZEOF(USEDIN(SELF,'PLANT_SPATIAL_CONFIGURATION.' +
            'NAME_ATTRIBUTE.NAMED_ITEM')) <= 1);
  END_ENTITY; -- action_request_solution

  ENTITY action_request_status;
    status          : label;
    assigned_request : versioned_action_request;
  END_ENTITY; -- action_request_status

  ENTITY action_status;
    status         : label;
    assigned_action : executed_action;
  END_ENTITY; -- action_status

  ENTITY amount_of_substance_measure_with_unit
    SUBTYPE OF (measure_with_unit);
    WHERE
    wr1: ('PLANT_SPATIAL_CONFIGURATION.AMOUNT_OF_SUBSTANCE_UNIT' IN
TYPEOF(SELF\
            measure_with_unit.unit_component));
  END_ENTITY; -- amount_of_substance_measure_with_unit

  ENTITY amount_of_substance_unit
    SUBTYPE OF (named_unit);
    WHERE
    wr1: ((SELF\named_unit.dimensions.length_exponent = 0) AND (SELF\
            named_unit.dimensions.mass_exponent = 0) AND (SELF\
            named_unit.dimensions.time_exponent = 0) AND (SELF\
            named_unit.dimensions.electric_current_exponent = 0) AND (
```

 © ISO 2001 — All rights reserved

```
        SELF\named_unit.dimensions.
        thermodynamic_temperature_exponent = 0) AND (SELF\named_unit
        .dimensions.amount_of_substance_exponent = 1) AND (SELF\
        named_unit.dimensions.luminous_intensity_exponent = 0));
END_ENTITY; -- amount_of_substance_unit

ENTITY angular_location
  SUBTYPE OF (dimensional_location);
    angle_selection : angle_relator;
END_ENTITY; -- angular_location

ENTITY application_context;
    application : label;
  DERIVE
    description : text := get_description_value(SELF);
    id          : identifier := get_id_value(SELF);
  INVERSE
    context_elements : SET [1:?] OF application_context_element FOR
                       frame_of_reference;
  WHERE
    wr1: (SIZEOF(USEDIN(SELF,'PLANT_SPATIAL_CONFIGURATION.' +
         'DESCRIPTION_ATTRIBUTE.DESCRIBED_ITEM')) <= 1);
    wr2: (SIZEOF(USEDIN(SELF,'PLANT_SPATIAL_CONFIGURATION.' +
         'ID_ATTRIBUTE.IDENTIFIED_ITEM')) <= 1);
END_ENTITY; -- application_context

ENTITY application_context_element
  SUPERTYPE OF (ONEOF (product_context,product_definition_context));
    name               : label;
    frame_of_reference : application_context;
END_ENTITY; -- application_context_element

ENTITY application_protocol_definition;
    status                                : label;
    application_interpreted_model_schema_name : label;
    application_protocol_year             : year_number;
    application                           : application_context;
END_ENTITY; -- application_protocol_definition

ENTITY applied_action_request_assignment
  SUBTYPE OF (action_request_assignment);
    items : SET [1:?] OF action_request_item;
END_ENTITY; -- applied_action_request_assignment

ENTITY applied_approval_assignment
  SUBTYPE OF (approval_assignment);
    items : SET [1:?] OF approval_item;
END_ENTITY; -- applied_approval_assignment

ENTITY applied_classification_assignment
  SUBTYPE OF (classification_assignment);
    items : SET [1:?] OF classification_item;
  WHERE
    wr1: ((NOT (SIZEOF(QUERY ( item <* SELF.items | (NOT (
```

© ISO 2001 — All rights reserved

```
        'PLANT_SPATIAL_CONFIGURATION.PLANT_ITEM_CONNECTION' IN
        TYPEOF(item))) )) = 0)) OR (SIZEOF(TYPEOF(SELF.
        assigned_class) * [
        'PLANT_SPATIAL_CONFIGURATION.CONNECTION_FUNCTIONAL_CLASS',
        'PLANT_SPATIAL_CONFIGURATION.CONNECTION_MOTION_CLASS']) >= 1));
  wr2: ((NOT (SIZEOF(QUERY ( item <* SELF.items | (NOT (
        'PLANT_SPATIAL_CONFIGURATION.PLANT_ITEM_CONNECTOR' IN
        TYPEOF(item))) )) = 0)) OR (SIZEOF(TYPEOF(SELF.
        assigned_class) * [
        'PLANT_SPATIAL_CONFIGURATION.CONNECTOR_END_TYPE_CLASS',
        'PLANT_SPATIAL_CONFIGURATION.ELECTRICAL_CONNECTOR_CLASS',
        'PLANT_SPATIAL_CONFIGURATION.PIPING_CONNECTOR_CLASS',
        'PLANT_SPATIAL_CONFIGURATION.EXTERNALLY_DEFINED_CLASS',
        'PLANT_SPATIAL_CONFIGURATION.' +
        'STRUCTURAL_LOAD_CONNECTOR_CLASS']) >= 1));
  wr3: ((NOT (SIZEOF(QUERY ( item <* SELF.items | (NOT (
        'PLANT_SPATIAL_CONFIGURATION.PIPING_COMPONENT_DEFINITION' IN
         TYPEOF(item))) )) = 0)) OR (SIZEOF(TYPEOF(SELF.
        assigned_class) * [
        'PLANT_SPATIAL_CONFIGURATION.BLANK_FITTING_CLASS',
        'PLANT_SPATIAL_CONFIGURATION.ELBOW_FITTING_CLASS',
        'PLANT_SPATIAL_CONFIGURATION.FLANGE_FITTING_CLASS',
        'PLANT_SPATIAL_CONFIGURATION.' +
        'FLANGE_FITTING_NECK_TYPE_CLASS',
        'PLANT_SPATIAL_CONFIGURATION.PIPE_CLOSURE_FITTING_CLASS',
        'PLANT_SPATIAL_CONFIGURATION.PIPE_CLASS',
        'PLANT_SPATIAL_CONFIGURATION.REDUCER_FITTING_CLASS',
        'PLANT_SPATIAL_CONFIGURATION.SPACER_FITTING_CLASS',
        'PLANT_SPATIAL_CONFIGURATION.SPECIALTY_ITEM_CLASS',
        'PLANT_SPATIAL_CONFIGURATION.SWAGE_FITTING_CLASS',
        'PLANT_SPATIAL_CONFIGURATION.VALVE_CLASS']) >= 1));
END_ENTITY; -- applied_classification_assignment

ENTITY applied_date_and_time_assignment
  SUBTYPE OF (date_and_time_assignment);
    items : SET [1:?] OF date_and_time_item;
END_ENTITY; -- applied_date_and_time_assignment

ENTITY applied_date_assignment
  SUBTYPE OF (date_assignment);
    items : SET [1:?] OF dated_item;
END_ENTITY; -- applied_date_assignment

ENTITY applied_document_reference
  SUBTYPE OF (document_reference);
    items : SET [1:?] OF document_item;
END_ENTITY; -- applied_document_reference

ENTITY applied_identification_assignment
  SUBTYPE OF (identification_assignment);
    items : SET [1:?] OF identified_item;
```

 © ISO 2001 — All rights reserved

```
  WHERE
    wr1: applied_identification_correlation(SELF);
END_ENTITY; -- applied_identification_assignment

ENTITY approval;
    status : approval_status;
    level  : label;
END_ENTITY; -- approval

ENTITY approval_assignment
  ABSTRACT SUPERTYPE;
    assigned_approval : approval;
  DERIVE
    role : object_role := get_role(SELF);
  WHERE
    wr1: (SIZEOF(USEDIN(SELF,'PLANT_SPATIAL_CONFIGURATION.' +
            'ROLE_ASSOCIATION.ITEM_WITH_ROLE')) <= 1);
END_ENTITY; -- approval_assignment

ENTITY approval_date_time;
    date_time      : date_time_select;
    dated_approval : approval;
  DERIVE
    role : object_role := get_role(SELF);
  WHERE
    wr1: (SIZEOF(USEDIN(SELF,'PLANT_SPATIAL_CONFIGURATION.' +
            'ROLE_ASSOCIATION.ITEM_WITH_ROLE')) <= 1);
END_ENTITY; -- approval_date_time

ENTITY approval_person_organization;
    person_organization : person_organization_select;
    authorized_approval : approval;
    role                : approval_role;
END_ENTITY; -- approval_person_organization

ENTITY approval_role;
    role : label;
  DERIVE
    description : text := get_description_value(SELF);
  WHERE
    wr1: (SIZEOF(USEDIN(SELF,'PLANT_SPATIAL_CONFIGURATION.' +
            'DESCRIPTION_ATTRIBUTE.DESCRIBED_ITEM')) <= 1);
END_ENTITY; -- approval_role

ENTITY approval_status;
    name : label;
END_ENTITY; -- approval_status

ENTITY assembly_component_usage
  SUBTYPE OF (product_definition_usage);
    reference_designator : OPTIONAL identifier;
END_ENTITY; -- assembly_component_usage

ENTITY axis1_placement
```

© ISO 2001 — All rights reserved

```
  SUBTYPE OF (placement);
    axis : OPTIONAL direction;
  DERIVE
    z : direction := NVL(normalise(axis),dummy_gri || direction([0,0,1]));
  WHERE
    wr1: (SELF\geometric_representation_item.dim = 3);
END_ENTITY; -- axis1_placement

ENTITY axis2_placement_2d
  SUBTYPE OF (placement);
    ref_direction : OPTIONAL direction;
  DERIVE
    p : LIST [2:2] OF direction := build_2axes(ref_direction);
  WHERE
    wr1: (SELF\geometric_representation_item.dim = 2);
END_ENTITY; -- axis2_placement_2d

ENTITY axis2_placement_3d
  SUBTYPE OF (placement);
    axis          : OPTIONAL direction;
    ref_direction : OPTIONAL direction;
  DERIVE
    p : LIST [3:3] OF direction := build_axes(axis,ref_direction);
  WHERE
    wr1: (SELF\placement.location.dim = 3);
    wr2: ((NOT EXISTS(axis)) OR (axis.dim = 3));
    wr3: ((NOT EXISTS(ref_direction)) OR (ref_direction.dim = 3));
    wr4: ((NOT EXISTS(axis)) OR (NOT EXISTS(ref_direction)) OR (
           cross_product(axis,ref_direction).magnitude > 0));
END_ENTITY; -- axis2_placement_3d

ENTITY b_spline_curve
  SUPERTYPE OF (ONEOF (uniform_curve,b_spline_curve_with_knots,
     quasi_uniform_curve,bezier_curve) ANDOR rational_b_spline_curve)
  SUBTYPE OF (bounded_curve);
    degree              : INTEGER;
    control_points_list : LIST [2:?] OF cartesian_point;
    curve_form          : b_spline_curve_form;
    closed_curve        : LOGICAL;
    self_intersect      : LOGICAL;
  DERIVE
    upper_index_on_control_points : INTEGER := SIZEOF(
                                    control_points_list) - 1;
    control_points                : ARRAY [0:100] OF cartesian_point :=
                                    list_to_array(control_points_list,
                                    0,upper_index_on_control_points);
  WHERE
    wr1: (('PLANT_SPATIAL_CONFIGURATION.UNIFORM_CURVE' IN TYPEOF(SELF))
OR (
           'PLANT_SPATIAL_CONFIGURATION.QUASI_UNIFORM_CURVE' IN
           TYPEOF(SELF)) OR (
```

 © ISO 2001 — All rights reserved

```
            'PLANT_SPATIAL_CONFIGURATION.BEZIER_CURVE' IN TYPEOF(SELF)) OR (
            'PLANT_SPATIAL_CONFIGURATION.B_SPLINE_CURVE_WITH_KNOTS' IN
TYPEOF(SELF)));
  END_ENTITY; -- b_spline_curve

  ENTITY b_spline_curve_with_knots
    SUBTYPE OF (b_spline_curve);
      knot_multiplicities : LIST [2:?] OF INTEGER;
      knots               : LIST [2:?] OF parameter_value;
      knot_spec           : knot_type;
    DERIVE
      upper_index_on_knots : INTEGER := SIZEOF(knots);
    WHERE
      wr1: constraints_param_b_spline(degree,upper_index_on_knots,
             upper_index_on_control_points,knot_multiplicities,knots);
      wr2: (SIZEOF(knot_multiplicities) = upper_index_on_knots);
  END_ENTITY; -- b_spline_curve_with_knots

  ENTITY b_spline_surface
    SUPERTYPE OF (ONEOF (b_spline_surface_with_knots,uniform_surface,
        quasi_uniform_surface,bezier_surface) ANDOR
        rational_b_spline_surface)
    SUBTYPE OF (bounded_surface);
      u_degree            : INTEGER;
      v_degree            : INTEGER;
      control_points_list : LIST [2:?] OF LIST [2:?] OF cartesian_point;
      surface_form        : b_spline_surface_form;
      u_closed            : LOGICAL;
      v_closed            : LOGICAL;
      self_intersect      : LOGICAL;
    DERIVE
      u_upper       : INTEGER := SIZEOF(control_points_list) - 1;
      v_upper       : INTEGER := SIZEOF(control_points_list[1]) - 1;
      control_points : ARRAY [0:100] OF ARRAY [0:100] OF cartesian_point
                     := make_array_of_array(control_points_list,0,
                     u_upper,0,v_upper);
    WHERE
      wr1: (('PLANT_SPATIAL_CONFIGURATION.UNIFORM_SURFACE' IN
TYPEOF(SELF)) OR (
            'PLANT_SPATIAL_CONFIGURATION.QUASI_UNIFORM_SURFACE' IN
            TYPEOF(SELF)) OR
            ('PLANT_SPATIAL_CONFIGURATION.BEZIER_SURFACE' IN TYPEOF(SELF))
OR
            ('PLANT_SPATIAL_CONFIGURATION.B_SPLINE_SURFACE_WITH_KNOTS' IN
            TYPEOF(SELF)));
  END_ENTITY; -- b_spline_surface

  ENTITY b_spline_surface_with_knots
    SUBTYPE OF (b_spline_surface);
      u_multiplicities : LIST [2:?] OF INTEGER;
      v_multiplicities : LIST [2:?] OF INTEGER;
      u_knots          : LIST [2:?] OF parameter_value;
      v_knots          : LIST [2:?] OF parameter_value;
      knot_spec        : knot_type;
```

© ISO 2001 — All rights reserved

```
    DERIVE
      knot_u_upper : INTEGER := SIZEOF(u_knots);
      knot_v_upper : INTEGER := SIZEOF(v_knots);
    WHERE
      wr1: constraints_param_b_spline(SELF\b_spline_surface.u_degree,
             knot_u_upper,SELF\b_spline_surface.u_upper,u_multiplicities,
             u_knots);
      wr2: constraints_param_b_spline(SELF\b_spline_surface.v_degree,
             knot_v_upper,SELF\b_spline_surface.v_upper,v_multiplicities,
             v_knots);
      wr3: (SIZEOF(u_multiplicities) = knot_u_upper);
      wr4: (SIZEOF(v_multiplicities) = knot_v_upper);
  END_ENTITY; -- b_spline_surface_with_knots

  ENTITY bezier_curve
    SUBTYPE OF (b_spline_curve);
  END_ENTITY; -- bezier_curve

  ENTITY bezier_surface
    SUBTYPE OF (b_spline_surface);
  END_ENTITY; -- bezier_surface

  ENTITY blank_fitting_class
    SUBTYPE OF (group);
    WHERE
      wr1: (SIZEOF(QUERY ( aca <* QUERY ( ca <* USEDIN(SELF,
             'PLANT_SPATIAL_CONFIGURATION.CLASSIFICATION_ASSIGNMENT.' +
             'ASSIGNED_CLASS') |

('PLANT_SPATIAL_CONFIGURATION.APPLIED_CLASSIFICATION_ASSIGNMENT'
             IN TYPEOF(ca)) ) | (NOT (SIZEOF(QUERY ( it <* aca.items | (
             NOT (
             'PLANT_SPATIAL_CONFIGURATION.PIPING_COMPONENT_DEFINITION' IN
              TYPEOF(it))) )) = 0)) )) = 0);
      wr2: (SIZEOF(QUERY ( aca <* QUERY ( ca <* USEDIN(SELF,
             'PLANT_SPATIAL_CONFIGURATION.CLASSIFICATION_ASSIGNMENT.' +
             'ASSIGNED_CLASS') |

('PLANT_SPATIAL_CONFIGURATION.APPLIED_CLASSIFICATION_ASSIGNMENT'
             IN TYPEOF(ca)) ) | (NOT (SIZEOF(QUERY ( pcd <*
             QUERY ( it <* aca.items | (
             'PLANT_SPATIAL_CONFIGURATION.PIPING_COMPONENT_DEFINITION' IN
              TYPEOF(it)) ) | (NOT (SIZEOF(QUERY ( aca1 <* USEDIN(pcd.
             formation.of_product,'PLANT_SPATIAL_CONFIGURATION.' +
             'APPLIED_CLASSIFICATION_ASSIGNMENT.ITEMS') | class_in_tree(
             aca1.assigned_class,'blank') )) = 1)) )) = 0)) )) = 0);
  END_ENTITY; -- blank_fitting_class

  ENTITY block
    SUBTYPE OF (geometric_representation_item);
      position : axis2_placement_3d;
```

 © ISO 2001 — All rights reserved

```
    x       : positive_length_measure;
    y       : positive_length_measure;
    z       : positive_length_measure;
END_ENTITY; -- block

ENTITY bolt_and_nut_component_class
  SUBTYPE OF (group);
  WHERE
    wr1: (SIZEOF(QUERY ( aca <* QUERY ( ca <* USEDIN(SELF,
           'PLANT_SPATIAL_CONFIGURATION.CLASSIFICATION_ASSIGNMENT.' +
           'ASSIGNED_CLASS') |

('PLANT_SPATIAL_CONFIGURATION.APPLIED_CLASSIFICATION_ASSIGNMENT'
           IN TYPEOF(ca)) ) | (NOT (SIZEOF(QUERY ( it <* aca.items | (
           NOT

('PLANT_SPATIAL_CONFIGURATION.BOLT_AND_NUT_COMPONENT_DEFINITION'
           IN TYPEOF(it))) )) = 0)) )) = 0);
    wr2: (SIZEOF(QUERY ( aca <* QUERY ( ca <* USEDIN(SELF,
           'PLANT_SPATIAL_CONFIGURATION.CLASSIFICATION_ASSIGNMENT.' +
           'ASSIGNED_CLASS') |

('PLANT_SPATIAL_CONFIGURATION.APPLIED_CLASSIFICATION_ASSIGNMENT'
           IN TYPEOF(ca)) ) | (NOT (SIZEOF(QUERY ( pcd <*
           QUERY ( it <* aca.items |

('PLANT_SPATIAL_CONFIGURATION.BOLT_AND_NUT_COMPONENT_DEFINITION'
           IN TYPEOF(it)) ) | (NOT (SIZEOF(QUERY ( aca1 <* USEDIN(pcd.
           formation.of_product,'PLANT_SPATIAL_CONFIGURATION.' +
           'APPLIED_CLASSIFICATION_ASSIGNMENT.ITEMS') | class_in_tree(
           aca1.assigned_class,'bolt and nut component') )) = 1)) )) =
           0)) )) = 0);
END_ENTITY; -- bolt_and_nut_component_class

ENTITY bolt_and_nut_component_definition
  SUBTYPE OF (product_definition);
END_ENTITY; -- bolt_and_nut_component_definition

ENTITY bolt_and_nut_set_definition
  SUBTYPE OF (product_definition);
END_ENTITY; -- bolt_and_nut_set_definition

ENTITY boolean_result
  SUBTYPE OF (geometric_representation_item);
    operator       : boolean_operator;
    first_operand  : boolean_operand;
    second_operand : boolean_operand;
END_ENTITY; -- boolean_result

ENTITY boundary_curve
  SUBTYPE OF (composite_curve_on_surface);
  WHERE
    wr1: SELF\composite_curve.closed_curve;
END_ENTITY; -- boundary_curve
```

© ISO 2001 — All rights reserved

```
  ENTITY bounded_curve
    SUPERTYPE OF (ONEOF (polyline,b_spline_curve,trimmed_curve,
       bounded_pcurve,bounded_surface_curve,composite_curve))
    SUBTYPE OF (curve);
  END_ENTITY; -- bounded_curve

  ENTITY bounded_pcurve
    SUBTYPE OF (pcurve, bounded_curve);
    WHERE
      wr1: ('PLANT_SPATIAL_CONFIGURATION.BOUNDED_CURVE' IN
TYPEOF(SELF\pcurve.
            reference_to_curve.items[1]));
  END_ENTITY; -- bounded_pcurve

  ENTITY bounded_surface
    SUPERTYPE OF (ONEOF (b_spline_surface,rectangular_trimmed_surface,
       curve_bounded_surface,rectangular_composite_surface))
    SUBTYPE OF (surface);
  END_ENTITY; -- bounded_surface

  ENTITY bounded_surface_curve
    SUBTYPE OF (surface_curve, bounded_curve);
    WHERE
      wr1: ('PLANT_SPATIAL_CONFIGURATION.BOUNDED_CURVE' IN
TYPEOF(SELF\surface_curve.
            curve_3d));
  END_ENTITY; -- bounded_surface_curve

  ENTITY brep_with_voids
    SUBTYPE OF (manifold_solid_brep);
      voids : SET [1:?] OF oriented_closed_shell;
  END_ENTITY; -- brep_with_voids

  ENTITY cableway_component_class
    SUBTYPE OF (group);
    WHERE
      wr1: (SIZEOF(QUERY ( aca <* QUERY ( ca <* USEDIN(SELF,
            'PLANT_SPATIAL_CONFIGURATION.' +
            'CLASSIFICATION_ASSIGNMENT.ASSIGNED_CLASS') |

('PLANT_SPATIAL_CONFIGURATION.APPLIED_CLASSIFICATION_ASSIGNMENT'
            IN TYPEOF(ca)) ) | (NOT (SIZEOF(QUERY ( it <* aca.items | (
            NOT (

'PLANT_SPATIAL_CONFIGURATION.CABLEWAY_COMPONENT_DEFINITION'
            IN TYPEOF(it))) )) = 0)) )) = 0));
      wr2: (SIZEOF(QUERY ( aca <* QUERY ( ca <* USEDIN(SELF,
            'PLANT_SPATIAL_CONFIGURATION.CLASSIFICATION_ASSIGNMENT.' +
            'ASSIGNED_CLASS') |
```

 © ISO 2001 — All rights reserved

```
('PLANT_SPATIAL_CONFIGURATION.APPLIED_CLASSIFICATION_ASSIGNMENT'
          IN TYPEOF(ca)) ) | (NOT (SIZEOF(QUERY ( pcd <*
          QUERY ( it <* aca.items | (
          'PLANT_SPATIAL_CONFIGURATION.PIPING_COMPONENT_DEFINITION' IN
           TYPEOF(it)) ) | (NOT (SIZEOF(QUERY ( aca1 <* USEDIN(pcd.
          formation.of_product,'PLANT_SPATIAL_CONFIGURATION.' +
          'APPLIED_CLASSIFICATION_ASSIGNMENT.ITEMS') | class_in_tree(
          aca1.assigned_class,'cableway component') )) = 1)) )) = 0)) ))
          = 0);
 END_ENTITY; -- cableway_component_class

 ENTITY cableway_component_definition
  SUBTYPE OF (product_definition);
 END_ENTITY; -- cableway_component_definition

 ENTITY cableway_connector_class
  SUBTYPE OF (group);
 END_ENTITY; -- cableway_connector_class

 ENTITY cableway_system
  SUBTYPE OF (product_definition);
  WHERE
   wr1: (SIZEOF(QUERY ( pdr <* USEDIN(SELF,
          'PLANT_SPATIAL_CONFIGURATION.' +
          'PRODUCT_DEFINITION_RELATIONSHIP.RELATED_PRODUCT_DEFINITION')
          | (('PLANT_SPATIAL_CONFIGURATION.PLANT' IN TYPEOF(pdr.
          relating_product_definition.formation.of_product)) AND (pdr.
          relating_product_definition.frame_of_reference.name =
          'functional occurrence')) )) = 1);
 END_ENTITY; -- cableway_system

 ENTITY calendar_date
  SUBTYPE OF (date);
   day_component   : day_in_month_number;
   month_component : month_in_year_number;
  WHERE
   wr1: valid_calendar_date(SELF);
 END_ENTITY; -- calendar_date

 ENTITY cartesian_point
  SUBTYPE OF (point);
   coordinates : LIST [1:3] OF length_measure;
 END_ENTITY; -- cartesian_point

 ENTITY cartesian_transformation_operator
  SUPERTYPE OF (ONEOF (cartesian_transformation_operator_3d))
  SUBTYPE OF (geometric_representation_item,
     functionally_defined_transformation);
   axis1       : OPTIONAL direction;
   axis2       : OPTIONAL direction;
   local_origin : cartesian_point;
   scale       : OPTIONAL REAL;
  DERIVE
```

© ISO 2001 — All rights reserved

```
    scl : REAL := NVL(scale,1);
  WHERE
    wr1: (scl > 0);
END_ENTITY; -- cartesian_transformation_operator

ENTITY cartesian_transformation_operator_3d
  SUBTYPE OF (cartesian_transformation_operator);
    axis3 : OPTIONAL direction;
  DERIVE
    u : LIST [3:3] OF direction := base_axis(3,SELF\
          cartesian_transformation_operator.axis1,SELF\
          cartesian_transformation_operator.axis2,axis3);
  WHERE
    wr1: (SELF\geometric_representation_item.dim = 3);
END_ENTITY; -- cartesian_transformation_operator_3d

ENTITY catalogue
  SUBTYPE OF (document, external_source);
END_ENTITY; -- catalogue

ENTITY catalogue_connector
  SUBTYPE OF (shape_aspect, externally_defined_item);
  WHERE
    wr1: ('PLANT_SPATIAL_CONFIGURATION.CHARACTERIZED_OBJECT' IN TYPEOF(
           SELF.of_shape));
    wr2: ('PLANT_SPATIAL_CONFIGURATION.CATALOGUE' IN TYPEOF(SELF.source));
END_ENTITY; -- catalogue_connector

ENTITY catalogue_item
  SUBTYPE OF (externally_defined_plant_item_definition);
  WHERE
    wr1: ('PLANT_SPATIAL_CONFIGURATION.CATALOGUE' IN TYPEOF(SELF.source));
    wr2: (SELF.frame_of_reference.name = 'catalogue definition');
END_ENTITY; -- catalogue_item

ENTITY centre_of_symmetry
  SUBTYPE OF (derived_shape_aspect);
  WHERE
    wr1: (SIZEOF(QUERY ( sadr <* SELF\derived_shape_aspect.
           deriving_relationships | (NOT (
           'PLANT_SPATIAL_CONFIGURATION.SYMMETRIC_SHAPE_ASPECT' IN
           TYPEOF(sadr\shape_aspect_relationship.related_shape_aspect))) ))
           = 0);
END_ENTITY; -- centre_of_symmetry

ENTITY change_action
  SUBTYPE OF (directed_action);
  WHERE
    wr1: (SIZEOF(QUERY ( ca <* USEDIN(SELF,
           'PLANT_SPATIAL_CONFIGURATION.' +
           'ACTION_ASSIGNMENT.ASSIGNED_ACTION') | ((
```

 © ISO 2001 — All rights reserved

```
        'PLANT_SPATIAL_CONFIGURATION.' +
        'PLANT_SPATIAL_CONFIGURATION_CHANGE_ASSIGNMENT') IN TYPEOF(
        ca)) )) >= 1);
   wr2: (SIZEOF(QUERY ( ar <* SELF\directed_action.directive.requests
         | (NOT (SIZEOF(USEDIN(ar,'PLANT_SPATIAL_CONFIGURATION.' +
        'ACTION_REQUEST_SOLUTION.REQUEST')) = 1)) )) = 0);
   wr3: (SIZEOF(USEDIN(SELF,
        'PLANT_SPATIAL_CONFIGURATION.ACTION_STATUS.' +
        'ASSIGNED_ACTION')) = 1);
END_ENTITY; -- change_action

ENTITY change_item_id_assignment
  SUBTYPE OF (name_assignment);
   items : SET [1:?] OF change_item;
END_ENTITY; -- change_item_id_assignment

ENTITY change_life_cycle_stage_assignment
  SUBTYPE OF (group_assignment);
   items : SET [1:?] OF change_life_cycle_item;
END_ENTITY; -- change_life_cycle_stage_assignment

ENTITY characterized_object;
   name        : label;
   description : OPTIONAL text;
END_ENTITY; -- characterized_object

ENTITY circle
  SUBTYPE OF (conic);
   radius : positive_length_measure;
END_ENTITY; -- circle

ENTITY classification_assignment
  ABSTRACT SUPERTYPE;
   assigned_class : group;
   role           : classification_role;
END_ENTITY; -- classification_assignment

ENTITY classification_role;
   name        : label;
   description : OPTIONAL text;
END_ENTITY; -- classification_role

ENTITY closed_shell
  SUBTYPE OF (connected_face_set);
END_ENTITY; -- closed_shell

ENTITY colour;
END_ENTITY; -- colour

ENTITY colour_rgb
  SUBTYPE OF (colour_specification);
   red   : REAL;
   green : REAL;
   blue  : REAL;
```

© ISO 2001 — All rights reserved

```
  WHERE
    wr1: ((0 <= red) AND (red <= 1));
    wr2: ((0 <= green) AND (green <= 1));
    wr3: ((0 <= blue) AND (blue <= 1));
END_ENTITY; -- colour_rgb

ENTITY colour_specification
  SUBTYPE OF (colour);
    name : label;
END_ENTITY; -- colour_specification

ENTITY composite_curve
  SUBTYPE OF (bounded_curve);
    segments       : LIST [1:?] OF composite_curve_segment;
    self_intersect : LOGICAL;
  DERIVE
    n_segments   : INTEGER := SIZEOF(segments);
    closed_curve : LOGICAL := segments[n_segments].transition <>
                   discontinuous;
  WHERE
    wr1: (((NOT closed_curve) AND (SIZEOF(QUERY ( temp <* segments | (
           temp.transition = discontinuous) )) = 1)) OR (closed_curve
           AND (SIZEOF(QUERY ( temp <* segments | (temp.transition =
           discontinuous) )) = 0)));
END_ENTITY; -- composite_curve

ENTITY composite_curve_on_surface
  SUBTYPE OF (composite_curve);
  DERIVE
    basis_surface : SET [0:2] OF surface := get_basis_surface(SELF);
  WHERE
    wr1: (SIZEOF(basis_surface) > 0);
    wr2: constraints_composite_curve_on_surface(SELF);
END_ENTITY; -- composite_curve_on_surface

ENTITY composite_curve_segment
  SUBTYPE OF (founded_item);
    transition   : transition_code;
    same_sense   : BOOLEAN;
    parent_curve : curve;
  INVERSE
    using_curves : BAG [1:?] OF composite_curve FOR segments;
  WHERE
    wr1: ('PLANT_SPATIAL_CONFIGURATION.BOUNDED_CURVE' IN
        TYPEOF(parent_curve));
END_ENTITY; -- composite_curve_segment

ENTITY conic
  SUPERTYPE OF (ONEOF (circle,ellipse,hyperbola,parabola))
  SUBTYPE OF (curve);
    position : axis2_placement;
```

 © ISO 2001 — All rights reserved

```
END_ENTITY; -- conic

ENTITY conical_surface
  SUBTYPE OF (elementary_surface);
    radius     : length_measure;
    semi_angle : plane_angle_measure;
  WHERE
    wr1: (radius >= 0);
END_ENTITY; -- conical_surface

ENTITY connected_face_set
  SUPERTYPE OF (ONEOF (closed_shell,open_shell))
  SUBTYPE OF (topological_representation_item);
    cfs_faces : SET [1:?] OF face;
END_ENTITY; -- connected_face_set

ENTITY clamp_component_definition
  SUBTYPE OF (product_definition);
END_ENTITY; -- clamp_component_definition

ENTITY clamp_set_definition
  SUBTYPE OF (product_definition);
END_ENTITY; -- clamp_set_definition

ENTITY connection_functional_class
  SUBTYPE OF (group);
END_ENTITY; -- connection_functional_class

ENTITY connection_material_definition
  SUBTYPE OF (product_definition);
END_ENTITY; -- connection_material_definition

ENTITY connection_motion_class
  SUBTYPE OF (group);
  WHERE
    wr1: (SELF.name IN ['flexible','locked orientation']);
END_ENTITY; -- connection_motion_class

ENTITY connection_node
  SUBTYPE OF (shape_aspect);
  WHERE
    wr1: ('PLANT_SPATIAL_CONFIGURATION.PIPING_SYSTEM' IN TYPEOF(SELF.
           of_shape.definition));
    wr2: (SIZEOF(QUERY ( sar <* USEDIN(SELF,
           'PLANT_SPATIAL_CONFIGURATION.SHAPE_ASPECT_RELATIONSHIP.' +
           'RELATING_SHAPE_ASPECT') | (
           'PLANT_SPATIAL_CONFIGURATION.LINE_TERMINATION_CONNECTION' IN
            TYPEOF(sar)) )) >= 2);
END_ENTITY; -- connection_node

ENTITY connector_end_type_class
  SUBTYPE OF (group);
END_ENTITY; -- connector_end_type_class
```

© ISO 2001 — All rights reserved

```
ENTITY context_dependent_unit
  SUBTYPE OF (named_unit);
    name : label;
END_ENTITY; -- context_dependent_unit

ENTITY conversion_based_unit
  SUBTYPE OF (named_unit);
    name             : label;
    conversion_factor : measure_with_unit;
END_ENTITY; -- conversion_based_unit

ENTITY coordinated_universal_time_offset;
    hour_offset   : INTEGER;
    minute_offset : OPTIONAL INTEGER;
    sense         : ahead_or_behind;
  DERIVE
    actual_minute_offset : INTEGER := NVL(minute_offset,0);
  WHERE
    wr1: ((0 <= hour_offset) AND (hour_offset < 24));
    wr2: ((0 <= actual_minute_offset) AND (actual_minute_offset <= 59));
    wr3: (NOT (((hour_offset <> 0) OR (actual_minute_offset <> 0)) AND (
           sense = exact)));
END_ENTITY; -- coordinated_universal_time_offset

ENTITY csg_solid
  SUBTYPE OF (solid_model);
    tree_root_expression : csg_select;
END_ENTITY; -- csg_solid

ENTITY curve
  SUPERTYPE OF (ONEOF (line,conic,pcurve,surface_curve,offset_curve_2d,
      offset_curve_3d,curve_replica) ANDOR bounded_curve)
  SUBTYPE OF (geometric_representation_item);
END_ENTITY; -- curve

ENTITY curve_bounded_surface
  SUBTYPE OF (bounded_surface);
    basis_surface  : surface;
    boundaries     : SET [1:?] OF boundary_curve;
    implicit_outer : BOOLEAN;
  WHERE
    wr1: ((NOT implicit_outer) OR (SIZEOF(QUERY ( temp <* boundaries | (
           'PLANT_SPATIAL_CONFIGURATION.OUTER_BOUNDARY_CURVE' IN
           TYPEOF(temp)) )) = 0));
    wr2: ((NOT implicit_outer) OR
           ('PLANT_SPATIAL_CONFIGURATION.BOUNDED_SURFACE' IN
           TYPEOF(basis_surface)));
    wr3: (SIZEOF(QUERY ( temp <* boundaries | (
           'PLANT_SPATIAL_CONFIGURATION.OUTER_BOUNDARY_CURVE' IN
           TYPEOF(temp)) )) <= 1);
    wr4: (SIZEOF(QUERY ( temp <* boundaries | (temp\
```

 © ISO 2001 — All rights reserved

```
        composite_curve_on_surface.basis_surface[1] <> SELF.
        basis_surface) )) = 0);
END_ENTITY; -- curve_bounded_surface

ENTITY curve_replica
  SUBTYPE OF (curve);
    parent_curve   : curve;
    transformation : cartesian_transformation_operator;
  WHERE
    wr1: (transformation.dim = parent_curve.dim);
    wr2: acyclic_curve_replica(SELF,parent_curve);
END_ENTITY; -- curve_replica

ENTITY cyclide_segment_solid
  SUBTYPE OF (geometric_representation_item);
    position    : axis2_placement_3d;
    radius1     : positive_length_measure;
    radius2     : positive_length_measure;
    cone_angle1 : plane_angle_measure;
    cone_angle2 : plane_angle_measure;
    turn_angle  : plane_angle_measure;
END_ENTITY; -- cyclide_segment_solid

ENTITY cylindrical_surface
  SUBTYPE OF (elementary_surface);
    radius : positive_length_measure;
END_ENTITY; -- cylindrical_surface

ENTITY data_environment;
    name        : label;
    description : text;
    elements    : SET [1:?] OF property_definition_representation;
END_ENTITY; -- data_environment

ENTITY date
  SUPERTYPE OF (ONEOF (calendar_date));
    year_component : year_number;
END_ENTITY; -- date

ENTITY date_and_time;
    date_component : date;
    time_component : local_time;
END_ENTITY; -- date_and_time

ENTITY date_and_time_assignment
  ABSTRACT SUPERTYPE;
    assigned_date_and_time : date_and_time;
    role                   : date_time_role;
END_ENTITY; -- date_and_time_assignment

ENTITY date_assignment
  ABSTRACT SUPERTYPE;
    assigned_date : date;
    role          : date_role;
```

© ISO 2001 — All rights reserved

```
  END_ENTITY; -- date_assignment

  ENTITY date_role;
     name : label;
    DERIVE
     description : text := get_description_value(SELF);
    WHERE
     wr1: (SIZEOF(USEDIN(SELF,'PLANT_SPATIAL_CONFIGURATION.' +
            'DESCRIPTION_ATTRIBUTE.DESCRIBED_ITEM')) <= 1);
  END_ENTITY; -- date_role

  ENTITY date_time_role;
     name : label;
    DERIVE
     description : text := get_description_value(SELF);
    WHERE
     wr1: (SIZEOF(USEDIN(SELF,'PLANT_SPATIAL_CONFIGURATION.' +
            'DESCRIPTION_ATTRIBUTE.DESCRIBED_ITEM')) <= 1);
  END_ENTITY; -- date_time_role

  ENTITY definitional_representation
    SUBTYPE OF (representation);
    WHERE
     wr1:
('PLANT_SPATIAL_CONFIGURATION.PARAMETRIC_REPRESENTATION_CONTEXT'
IN
            TYPEOF(SELF\representation.context_of_items));
  END_ENTITY; -- definitional_representation

  ENTITY degenerate_pcurve
    SUBTYPE OF (point);
     basis_surface      : surface;
     reference_to_curve : definitional_representation;
    WHERE
     wr1: (SIZEOF(reference_to_curve\representation.items) = 1);
     wr2: ('PLANT_SPATIAL_CONFIGURATION.CURVE' IN TYPEOF(reference_to_curve\
            representation.items[1]));
     wr3: (reference_to_curve\representation.items[1]\
            geometric_representation_item.dim = 2);
  END_ENTITY; -- degenerate_pcurve

  ENTITY degenerate_toroidal_surface
    SUBTYPE OF (toroidal_surface);
     select_outer : BOOLEAN;
    WHERE
     wr1: (major_radius < minor_radius);
  END_ENTITY; -- degenerate_toroidal_surface

  ENTITY derived_shape_aspect
    SUPERTYPE OF (ONEOF (centre_of_symmetry))
    SUBTYPE OF (shape_aspect);
```

 © ISO 2001 — All rights reserved

```
  INVERSE
    deriving_relationships : SET [1:?] OF shape_aspect_relationship FOR
                            relating_shape_aspect;
  WHERE
    wr1: (SIZEOF(QUERY ( dr <* SELF\derived_shape_aspect.
            deriving_relationships | (NOT ((
            'PLANT_SPATIAL_CONFIGURATION.' +
            'SHAPE_ASPECT_DERIVING_RELATIONSHIP') IN TYPEOF(dr))) )) = 0);
END_ENTITY; -- derived_shape_aspect

ENTITY derived_unit;
    elements : SET [1:?] OF derived_unit_element;
  DERIVE
    name : label := get_name_value(SELF);
  WHERE
    wr1: ((SIZEOF(elements) > 1) OR ((SIZEOF(elements) = 1) AND (
            elements[1].exponent <> 1)));
    wr2: (SIZEOF(USEDIN(SELF,'PLANT_SPATIAL_CONFIGURATION.' +
            'NAME_ATTRIBUTE.NAMED_ITEM')) <= 1);
END_ENTITY; -- derived_unit

ENTITY derived_unit_element;
    unit     : named_unit;
    exponent : REAL;
END_ENTITY; -- derived_unit_element

ENTITY description_attribute;
    attribute_value : text;
    described_item  : description_attribute_select;
END_ENTITY; -- description_attribute

ENTITY descriptive_colour
  SUBTYPE OF (colour, descriptive_representation_item);
END_ENTITY; -- descriptive_colour

ENTITY descriptive_representation_item
  SUBTYPE OF (representation_item);
    description : text;
END_ENTITY; -- descriptive_representation_item

ENTITY design_project
  SUBTYPE OF (organization);
  WHERE
    wr1: (SIZEOF(USEDIN(SELF,'PLANT_SPATIAL_CONFIGURATION.' +
            'ORGANIZATION_ASSIGNMENT.ASSIGNED_ORGANIZATION')) >= 1);
END_ENTITY; -- design_project

ENTITY design_project_assignment
  SUBTYPE OF (organization_assignment);
    items : SET [1:?] OF design_project_item;
  WHERE
    wr1: ('PLANT_SPATIAL_CONFIGURATION.DESIGN_PROJECT' IN TYPEOF(SELF.
            assigned_organization));
END_ENTITY; -- design_project_assignment
```

© ISO 2001 — All rights reserved

```
ENTITY dimensional_characteristic_representation;
   dimension      : dimensional_characteristic;
   representation : shape_dimension_representation;
END_ENTITY; -- dimensional_characteristic_representation

ENTITY dimensional_exponents;
   length_exponent                 : REAL;
   mass_exponent                   : REAL;
   time_exponent                   : REAL;
   electric_current_exponent       : REAL;
   thermodynamic_temperature_exponent : REAL;
   amount_of_substance_exponent    : REAL;
   luminous_intensity_exponent     : REAL;
END_ENTITY; -- dimensional_exponents

ENTITY dimensional_location
  SUPERTYPE OF (ONEOF (angular_location))
  SUBTYPE OF (shape_aspect_relationship);
END_ENTITY; -- dimensional_location

ENTITY dimensional_size;
   applies_to : shape_aspect;
   name       : label;
  WHERE
   wr1: (applies_to.product_definitional = TRUE);
END_ENTITY; -- dimensional_size

ENTITY directed_action
  SUBTYPE OF (executed_action);
   directive : action_directive;
END_ENTITY; -- directed_action

ENTITY direction
  SUBTYPE OF (geometric_representation_item);
   direction_ratios : LIST [2:3] OF REAL;
  WHERE
   wr1: (SIZEOF(QUERY ( tmp <* direction_ratios | (tmp <> 0) )) > 0);
END_ENTITY; -- direction

ENTITY document;
   id          : identifier;
   name        : label;
   description : OPTIONAL text;
   kind        : document_type;
  INVERSE
   representation_types : SET OF document_representation_type FOR
                          represented_document;
END_ENTITY; -- document

ENTITY document_reference
```

 © ISO 2001 — All rights reserved

```
  ABSTRACT SUPERTYPE;
    assigned_document : document;
    source            : label;
  DERIVE
    role : object_role := get_role(SELF);
  WHERE
    wr1: (SIZEOF(USEDIN(SELF,'PLANT_SPATIAL_CONFIGURATION.' +
          'ROLE_ASSOCIATION.ITEM_WITH_ROLE')) <= 1);
END_ENTITY; -- document_reference

ENTITY document_relationship;
    name              : label;
    description       : OPTIONAL text;
    relating_document : document;
    related_document  : document;
END_ENTITY; -- document_relationship

ENTITY document_representation_type;
    name                : label;
    represented_document : document;
END_ENTITY; -- document_representation_type

ENTITY document_type;
    product_data_type : label;
END_ENTITY; -- document_type

ENTITY document_usage_constraint;
    source               : document;
    subject_element      : label;
    subject_element_value : text;
END_ENTITY; -- document_usage_constraint

ENTITY ducting_system
  SUBTYPE OF (product_definition);
  WHERE
    wr1: (SIZEOF(QUERY ( pdr <* USEDIN(SELF,
          'PLANT_SPATIAL_CONFIGURATION.' +
          'PRODUCT_DEFINITION_RELATIONSHIP.RELATED_PRODUCT_DEFINITION')
          | (('PLANT_SPATIAL_CONFIGURATION.PLANT' IN TYPEOF(pdr.
          relating_product_definition.formation.of_product)) AND (pdr.
          relating_product_definition.frame_of_reference.name =
          'functional occurrence')) )) = 1);
END_ENTITY; -- ducting_system

ENTITY eccentric_cone
  SUBTYPE OF (geometric_representation_item);
    position    : axis2_placement_3d;
    semi_axis_1 : positive_length_measure;
    semi_axis_2 : positive_length_measure;
    height      : positive_length_measure;
    x_offset    : length_measure;
    y_offset    : length_measure;
    ratio       : REAL;
  WHERE
```

© ISO 2001 — All rights reserved

```
    wr1: (ratio >= 0);
  END_ENTITY; -- eccentric_cone

  ENTITY edge
    SUPERTYPE OF (ONEOF (edge_curve,oriented_edge))
    SUBTYPE OF (topological_representation_item);
      edge_start : vertex;
      edge_end   : vertex;
  END_ENTITY; -- edge

  ENTITY edge_curve
    SUBTYPE OF (edge, geometric_representation_item);
      edge_geometry : curve;
      same_sense    : BOOLEAN;
  END_ENTITY; -- edge_curve

  ENTITY edge_loop
    SUBTYPE OF (loop, path);
    DERIVE
      ne : INTEGER := SIZEOF(SELF\path.edge_list);
    WHERE
      wr1: (SELF\path.edge_list[1].edge_start :=: SELF\path.edge_list[ne].
             edge_end);
  END_ENTITY; -- edge_loop

  ENTITY elbow_fitting_class
    SUBTYPE OF (group);
    WHERE
      wr1: (SIZEOF(QUERY ( aca <* QUERY ( ca <* USEDIN(SELF,
             'PLANT_SPATIAL_CONFIGURATION.' +
             'CLASSIFICATION_ASSIGNMENT.ASSIGNED_CLASS') |

('PLANT_SPATIAL_CONFIGURATION.APPLIED_CLASSIFICATION_ASSIGNMENT'
             IN TYPEOF(ca)) ) | (NOT (SIZEOF(QUERY ( it <* aca.items | (
             NOT (
             'PLANT_SPATIAL_CONFIGURATION.PIPING_COMPONENT_DEFINITION' IN
              TYPEOF(it))) )) = 0)) )) = 0);
      wr2: (SIZEOF(QUERY ( aca <* QUERY ( ca <* USEDIN(SELF,
             'PLANT_SPATIAL_CONFIGURATION.CLASSIFICATION_ASSIGNMENT.' +
             'ASSIGNED_CLASS') |

('PLANT_SPATIAL_CONFIGURATION.APPLIED_CLASSIFICATION_ASSIGNMENT'
             IN TYPEOF(ca)) ) | (NOT (SIZEOF(QUERY ( pcd <*
             QUERY ( it <* aca.items | (
             'PLANT_SPATIAL_CONFIGURATION.PIPING_COMPONENT_DEFINITION' IN
              TYPEOF(it)) ) | (NOT (SIZEOF(QUERY ( aca1 <* USEDIN(pcd.
             formation.of_product,'PLANT_SPATIAL_CONFIGURATION.' +
             'APPLIED_CLASSIFICATION_ASSIGNMENT.ITEMS') | class_in_tree(
             aca1.assigned_class,'elbow') )) = 1)) )) = 0)) )) = 0);
  END_ENTITY; -- elbow_fitting_class
```

 © ISO 2001 — All rights reserved

```
ENTITY electric_current_measure_with_unit
  SUBTYPE OF (measure_with_unit);
  WHERE
    wr1: ('PLANT_SPATIAL_CONFIGURATION.ELECTRIC_CURRENT_UNIT' IN
TYPEOF(SELF\
          measure_with_unit.unit_component));
END_ENTITY; -- electric_current_measure_with_unit

ENTITY electric_current_unit
  SUBTYPE OF (named_unit);
  WHERE
    wr1: ((SELF\named_unit.dimensions.length_exponent = 0) AND (SELF\
          named_unit.dimensions.mass_exponent = 0) AND (SELF\
          named_unit.dimensions.time_exponent = 0) AND (SELF\
          named_unit.dimensions.electric_current_exponent = 1) AND (
          SELF\named_unit.dimensions.
          thermodynamic_temperature_exponent = 0) AND (SELF\named_unit
          .dimensions.amount_of_substance_exponent = 0) AND (SELF\
          named_unit.dimensions.luminous_intensity_exponent = 0));
END_ENTITY; -- electric_current_unit

ENTITY electrical_connector_class
  SUBTYPE OF (group);
END_ENTITY; -- electrical_connector_class

ENTITY electrical_system
  SUBTYPE OF (product_definition);
  WHERE
    wr1: (SIZEOF(QUERY ( pdr <* USEDIN(SELF,
          'PLANT_SPATIAL_CONFIGURATION.' +
          'PRODUCT_DEFINITION_RELATIONSHIP.RELATED_PRODUCT_DEFINITION')
          | (('PLANT_SPATIAL_CONFIGURATION.PLANT' IN TYPEOF(pdr.
          relating_product_definition.formation.of_product)) AND (pdr.
          relating_product_definition.frame_of_reference.name =
          'functional occurrence')) )) = 1);
END_ENTITY; -- electrical_system

ENTITY elementary_surface
  SUPERTYPE OF (ONEOF (plane,cylindrical_surface,conical_surface,
     spherical_surface,toroidal_surface))
  SUBTYPE OF (surface);
    position : axis2_placement_3d;
END_ENTITY; -- elementary_surface

ENTITY ellipse
  SUBTYPE OF (conic);
    semi_axis_1 : positive_length_measure;
    semi_axis_2 : positive_length_measure;
END_ENTITY; -- ellipse

ENTITY ellipsoid
  SUBTYPE OF (geometric_representation_item);
    position    : axis2_placement_3d;
    semi_axis_1 : positive_length_measure;
```

© ISO 2001 — All rights reserved

```
    semi_axis_2 : positive_length_measure;
    semi_axis_3 : positive_length_measure;
  END_ENTITY; -- ellipsoid

  ENTITY evaluated_degenerate_pcurve
    SUBTYPE OF (degenerate_pcurve);
    equivalent_point : cartesian_point;
  END_ENTITY; -- evaluated_degenerate_pcurve

  ENTITY executed_action
    SUBTYPE OF (action);
  END_ENTITY; -- executed_action

  ENTITY external_source;
    source_id : source_item;
    DERIVE
      description : text := get_description_value(SELF);
    WHERE
      wr1: (SIZEOF(USEDIN(SELF,'PLANT_SPATIAL_CONFIGURATION.' +
            'DESCRIPTION_ATTRIBUTE.DESCRIBED_ITEM')) <= 1);
  END_ENTITY; -- external_source

  ENTITY externally_defined_class
    SUBTYPE OF (group, externally_defined_item);
    WHERE
      wr1: (SIZEOF(QUERY ( aca <* QUERY ( ca <* USEDIN(SELF,
            'PLANT_SPATIAL_CONFIGURATION.CLASSIFICATION_ASSIGNMENT.' +
            'ASSIGNED_CLASS') |

('PLANT_SPATIAL_CONFIGURATION.APPLIED_CLASSIFICATION_ASSIGNMENT'
            IN TYPEOF(ca)) ) | (NOT (SIZEOF(QUERY ( it <* aca.items | (
            NOT ((SIZEOF(TYPEOF(it) * [
            'PLANT_SPATIAL_CONFIGURATION.ELECTRICAL_SYSTEM',
            'PLANT_SPATIAL_CONFIGURATION.DUCTING_SYSTEM',

'PLANT_SPATIAL_CONFIGURATION.INSTRUMENTATION_AND_CONTROL_SYSTEM'
,
            'PLANT_SPATIAL_CONFIGURATION.PIPING_SYSTEM',
            'PLANT_SPATIAL_CONFIGURATION.PLANT',
            'PLANT_SPATIAL_CONFIGURATION.PLANT_ITEM_CONNECTOR',
            'PLANT_SPATIAL_CONFIGURATION.PIPING_COMPONENT_DEFINITION',
            'PLANT_SPATIAL_CONFIGURATION.STRUCTURAL_SYSTEM']) = 1) OR ((
            'PLANT_SPATIAL_CONFIGURATION.PRODUCT_DEFINITION' IN TYPEOF(
            it)) AND (SIZEOF(QUERY ( pc <* it.formation.of_product.
            frame_of_reference | (pc.discipline_type = 'process plant') ))
            = 1)))) )) = 0)) )) = 0);
  END_ENTITY; -- externally_defined_class

  ENTITY externally_defined_document
    SUBTYPE OF (document, externally_defined_item);
  END_ENTITY; -- externally_defined_document
```

 © ISO 2001 — All rights reserved

```
ENTITY externally_defined_item;
   item_id : source_item;
   source  : external_source;
END_ENTITY; -- externally_defined_item

ENTITY externally_defined_item_relationship;
   name          : label;
   description   : OPTIONAL text;
   relating_item : externally_defined_item;
   related_item  : externally_defined_item;
END_ENTITY; -- externally_defined_item_relationship

ENTITY externally_defined_plant_item_definition
  SUBTYPE OF (product_definition, externally_defined_item);
END_ENTITY; -- externally_defined_plant_item_definition

ENTITY externally_defined_representation_item
  SUBTYPE OF (representation_item, externally_defined_item);
END_ENTITY; -- externally_defined_representation_item

ENTITY extruded_area_solid
  SUBTYPE OF (swept_area_solid);
    extruded_direction : direction;
    depth              : positive_length_measure;
  WHERE
    wr1: (dot_product(SELF\swept_area_solid.swept_area.basis_surface\
          elementary_surface.position.p[3],extruded_direction) <> 0);
END_ENTITY; -- extruded_area_solid

ENTITY extruded_face_solid
  SUBTYPE OF (swept_face_solid);
    extruded_direction : direction;
    depth              : positive_length_measure;
  WHERE
    wr1: (dot_product(SELF\swept_face_solid.swept_face.face_geometry\
          elementary_surface.position.p[3],extruded_direction) <> 0);
END_ENTITY; -- extruded_face_solid

ENTITY face
  SUPERTYPE OF (ONEOF (face_surface,oriented_face))
  SUBTYPE OF (topological_representation_item);
    bounds : SET [1:?] OF face_bound;
  WHERE
    wr1: (NOT mixed_loop_type_set(list_to_set(list_face_loops(SELF))));
    wr2: (SIZEOF(QUERY ( temp <* bounds | (
          'PLANT_SPATIAL_CONFIGURATION.FACE_OUTER_BOUND' IN
TYPEOF(temp))
          )) <= 1);
END_ENTITY; -- face

ENTITY face_bound
  SUBTYPE OF (topological_representation_item);
    bound      : loop;
```

© ISO 2001 — All rights reserved

```
    orientation : BOOLEAN;
  END_ENTITY; -- face_bound

  ENTITY face_outer_bound
    SUBTYPE OF (face_bound);
  END_ENTITY; -- face_outer_bound

  ENTITY face_surface
    SUBTYPE OF (face, geometric_representation_item);
      face_geometry : surface;
      same_sense    : BOOLEAN;
    WHERE
      wr1: (NOT ('PLANT_SPATIAL_CONFIGURATION.ORIENTED_SURFACE' IN
TYPEOF(
            face_geometry)));
  END_ENTITY; -- face_surface

  ENTITY faceted_brep
    SUBTYPE OF (manifold_solid_brep);
  END_ENTITY; -- faceted_brep

  ENTITY flange_fitting_class
    SUBTYPE OF (group);
    WHERE
      wr1: (SIZEOF(QUERY ( aca <* QUERY ( ca <* USEDIN(SELF,
            'PLANT_SPATIAL_CONFIGURATION.' +
            'CLASSIFICATION_ASSIGNMENT.ASSIGNED_CLASS') |

('PLANT_SPATIAL_CONFIGURATION.APPLIED_CLASSIFICATION_ASSIGNMENT'
            IN TYPEOF(ca)) ) | (NOT (SIZEOF(QUERY ( it <* aca.items | (
            NOT (
            'PLANT_SPATIAL_CONFIGURATION.PIPING_COMPONENT_DEFINITION' IN
             TYPEOF(it))) )) = 0)) )) = 0));
      wr2: (SIZEOF(QUERY ( aca <* QUERY ( ca <* USEDIN(SELF,
            'PLANT_SPATIAL_CONFIGURATION.' +
            'CLASSIFICATION_ASSIGNMENT.ASSIGNED_CLASS') |

('PLANT_SPATIAL_CONFIGURATION.APPLIED_CLASSIFICATION_ASSIGNMENT'
            IN TYPEOF(ca)) ) | (NOT (SIZEOF(QUERY ( pcd <*
            QUERY ( it <* aca.items | (
            'PLANT_SPATIAL_CONFIGURATION.PIPING_COMPONENT_DEFINITION' IN
             TYPEOF(it)) ) | (NOT (SIZEOF(QUERY ( aca1 <* USEDIN(pcd.
            formation.of_product,'PLANT_SPATIAL_CONFIGURATION.' +
            'APPLIED_CLASSIFICATION_ASSIGNMENT.ITEMS') | class_in_tree(
            aca1.assigned_class,'flange') )) = 1)) )) = 0)) )) = 0));
  END_ENTITY; -- flange_fitting_class

  ENTITY flange_fitting_neck_type_class
    SUBTYPE OF (group);
    WHERE
      wr1: (SIZEOF(QUERY ( aca <* QUERY ( ca <* USEDIN(SELF,
```

 © ISO 2001 — All rights reserved

```
            'PLANT_SPATIAL_CONFIGURATION.CLASSIFICATION_ASSIGNMENT.' +
            'ASSIGNED_CLASS') |

('PLANT_SPATIAL_CONFIGURATION.APPLIED_CLASSIFICATION_ASSIGNMENT'
            IN TYPEOF(ca)) ) | (NOT (SIZEOF(QUERY ( it <* aca.items | (
            NOT (
            'PLANT_SPATIAL_CONFIGURATION.PIPING_COMPONENT_DEFINITION' IN
             TYPEOF(it))) )) = 0)) )) = 0);
    wr2: (SIZEOF(QUERY ( aca <* QUERY ( ca <* USEDIN(SELF,
            'PLANT_SPATIAL_CONFIGURATION.CLASSIFICATION_ASSIGNMENT.' +
            'ASSIGNED_CLASS') |

('PLANT_SPATIAL_CONFIGURATION.APPLIED_CLASSIFICATION_ASSIGNMENT'
            IN TYPEOF(ca)) ) | (NOT (SIZEOF(QUERY ( pcd <*
            QUERY ( it <* aca.items | (
            'PLANT_SPATIAL_CONFIGURATION.PIPING_COMPONENT_DEFINITION' IN
             TYPEOF(it)) ) | (NOT (SIZEOF(QUERY ( aca1 <* USEDIN(pcd.
            formation.of_product,'PLANT_SPATIAL_CONFIGURATION.' +
            'APPLIED_CLASSIFICATION_ASSIGNMENT.ITEMS') | class_in_tree(
            aca1.assigned_class,'flange') )) = 1)) )) = 0)) )) =
             0);
  END_ENTITY; -- flange_fitting_neck_type_class

  ENTITY founded_item;
  END_ENTITY; -- founded_item

  ENTITY functionally_defined_transformation;
    name        : label;
    description : OPTIONAL text;
  END_ENTITY; -- functionally_defined_transformation

  ENTITY geometric_curve_set
   SUBTYPE OF (geometric_set);
   WHERE
    wr1: (SIZEOF(QUERY ( temp <* SELF\geometric_set.elements | (
            'PLANT_SPATIAL_CONFIGURATION.SURFACE' IN TYPEOF(temp)) )) = 0);
  END_ENTITY; -- geometric_curve_set

  ENTITY geometric_representation_context
   SUBTYPE OF (representation_context);
    coordinate_space_dimension : dimension_count;
  END_ENTITY; -- geometric_representation_context

  ENTITY geometric_representation_item
   SUBTYPE OF (representation_item);
   DERIVE
    dim : dimension_count := dimension_of(SELF);
   WHERE
    wr1: (SIZEOF(QUERY ( using_rep <* using_representations(SELF) | (
        NOT
('PLANT_SPATIAL_CONFIGURATION.GEOMETRIC_REPRESENTATION_CONTEXT'
        IN TYPEOF(using_rep.context_of_items))) )) = 0);
  END_ENTITY; -- geometric_representation_item
```

© ISO 2001 — All rights reserved

```
ENTITY geometric_set
  SUPERTYPE OF (ONEOF (geometric_curve_set,geometric_set_replica))
  SUBTYPE OF (geometric_representation_item);
    elements : SET [1:?] OF geometric_set_select;
END_ENTITY; -- geometric_set

ENTITY geometric_set_replica
  SUBTYPE OF (geometric_set);
    parent_set     : geometric_set;
    transformation : cartesian_transformation_operator;
  DERIVE
    SELF\geometric_set.elements : SET [1:?] OF geometric_set_select :=
                                  build_transformed_set(transformation,
                                  parent_set);
  WHERE
    wr1: acyclic_set_replica(SELF,parent_set);
END_ENTITY; -- geometric_set_replica

ENTITY global_uncertainty_assigned_context
  SUBTYPE OF (representation_context);
  uncertainty : SET [1:?] OF uncertainty_measure_with_unit;
END_ENTITY; --global_uncertainty_assigned_context

ENTITY global_unit_assigned_context
  SUBTYPE OF (representation_context);
    units : SET [1:?] OF unit;
END_ENTITY; -- global_unit_assigned_context

ENTITY group;
    name        : label;
    description : OPTIONAL text;
  DERIVE
    id : identifier := get_id_value(SELF);
  WHERE
    wr1: (SIZEOF(USEDIN(SELF,'PLANT_SPATIAL_CONFIGURATION.' +
          'ID_ATTRIBUTE.IDENTIFIED_ITEM')) <= 1);
END_ENTITY; -- group

ENTITY group_assignment
  ABSTRACT SUPERTYPE;
    assigned_group : group;
  DERIVE
    role : object_role := get_role(SELF);
  WHERE
    wr1: (SIZEOF(USEDIN(SELF,'PLANT_SPATIAL_CONFIGURATION.' +
          'ROLE_ASSOCIATION.ITEM_WITH_ROLE')) <= 1);
END_ENTITY; -- group_assignment

ENTITY group_relationship;
    name           : label;
    description    : OPTIONAL text;
```

 © ISO 2001 — All rights reserved

```
    relating_group : group;
    related_group  : group;
  END_ENTITY; -- group_relationship

  ENTITY half_space_solid
   SUBTYPE OF (geometric_representation_item);
    base_surface   : surface;
    agreement_flag : BOOLEAN;
  END_ENTITY; -- half_space_solid

  ENTITY heat_tracing_representation
   SUBTYPE OF (representation);
  END_ENTITY; -- heat_tracing_representation

  ENTITY hvac_branch_connection
   SUBTYPE OF (shape_aspect_relationship);
   WHERE
    wr1: (SELF.description = 'branch location');
    wr2:
('PLANT_SPATIAL_CONFIGURATION.HVAC_SECTION_SEGMENT_DEFINITION'
          IN TYPEOF(SELF.relating_shape_aspect.of_shape.definition));
    wr3:
('PLANT_SPATIAL_CONFIGURATION.HVAC_SECTION_SEGMENT_TERMINATION'
          IN TYPEOF(SELF.related_shape_aspect));
  END_ENTITY; -- hvac_branch_connection

  ENTITY hvac_component_definition
   SUBTYPE OF (product_definition);
  END_ENTITY; -- hvac_component_definition

  ENTITY hvac_connector
   SUBTYPE OF (shape_aspect);
   WHERE
    wr1 : (SELF\shape_aspect.of_shape\property_definition.definition\
           product_definition.frame_of_reference\
           application_context_element.name IN [
           'functional definition','physical definition',
           'functional occurrence','physical occurrence']);
    wr2 : ((NOT (SIZEOF(QUERY ( pd <* USEDIN(SELF,
           'PLANT_SPATIAL_CONFIGURATION.PROPERTY_DEFINITION.DEFINITION')
           | (pd.name = 'hvac service characteristics') )) >= 1)) OR
           (SIZEOF(QUERY ( sc <* QUERY ( pd <* USEDIN(SELF,
           'PLANT_SPATIAL_CONFIGURATION.PROPERTY_DEFINITION.DEFINITION')
           | (pd.name = 'hvac service characteristics') ) | (NOT (
           SIZEOF(QUERY ( pdr <* USEDIN(sc,
           'PLANT_SPATIAL_CONFIGURATION.' +
           'PROPERTY_DEFINITION_REPRESENTATION.DEFINITION') | (pdr.
           used_representation.name = 'design service characteristics') ))
           = 1)) )) = 0));
    wr3 : ((NOT (SIZEOF(QUERY ( pd <* USEDIN(SELF,
           'PLANT_SPATIAL_CONFIGURATION.PROPERTY_DEFINITION.DEFINITION')
           | (pd.name = 'hvac service characteristics') )) >= 1)) OR
           (SIZEOF(QUERY ( sc <* QUERY ( pd <* USEDIN(SELF,
           'PLANT_SPATIAL_CONFIGURATION.PROPERTY_DEFINITION.DEFINITION')
```

© ISO 2001 — All rights reserved

```
        | (pd.name = 'hvac service characteristics') ) | (NOT (
        SIZEOF(QUERY ( dsc <* QUERY ( pdr <* USEDIN(sc,
        'PLANT_SPATIAL_CONFIGURATION.' +
        'PROPERTY_DEFINITION_REPRESENTATION.DEFINITION') | (pdr.
        used_representation.name = 'design service characteristics') )
         | (SIZEOF(dsc.used_representation.items) >= 2) )) = 1)) ))
        = 0));
wr4 : ((NOT (SIZEOF(QUERY ( pd <* USEDIN(SELF,
         'PLANT_SPATIAL_CONFIGURATION.PROPERTY_DEFINITION.DEFINITION')
         | (pd.name = 'hvac service characteristics') )) >= 1)) OR
        (SIZEOF(QUERY ( sc <* QUERY ( pd <* USEDIN(SELF,
        'PLANT_SPATIAL_CONFIGURATION.PROPERTY_DEFINITION.DEFINITION')
         | (pd.name = 'hvac service characteristics') ) | (NOT (
        SIZEOF(QUERY ( dsc <* QUERY ( pdr <* USEDIN(sc,
        'PLANT_SPATIAL_CONFIGURATION.' +
        'PROPERTY_DEFINITION_REPRESENTATION.DEFINITION') | (pdr.
        used_representation.name = 'design service characteristics') )
         | ((1 <= SIZEOF(QUERY ( it <* dsc.used_representation.
        items | ((
        'PLANT_SPATIAL_CONFIGURATION.MEASURE_REPRESENTATION_ITEM'
        IN TYPEOF(it)) AND (it.name IN ['pressure',
        'minimum pressure','maximum pressure'])) ))) AND (SIZEOF(
        QUERY ( it <* dsc.used_representation.items | ((
        'PLANT_SPATIAL_CONFIGURATION.MEASURE_REPRESENTATION_ITEM'
        IN TYPEOF(it)) AND (it.name IN ['pressure',
        'minimum pressure','maximum pressure'])) )) <= 2)) )) = 1)) ))
        = 0));
wr5 : ((NOT (SIZEOF(QUERY ( pd <* USEDIN(SELF,
        'PLANT_SPATIAL_CONFIGURATION.PROPERTY_DEFINITION.DEFINITION')
        | (pd.name = 'hvac service characteristics') )) >= 1)) OR
        (SIZEOF(QUERY ( sc <* QUERY ( pd <* USEDIN(SELF,
        'PLANT_SPATIAL_CONFIGURATION.PROPERTY_DEFINITION.DEFINITION')
        | (pd.name = 'hvac service characteristics') ) | (NOT (
        SIZEOF(QUERY ( dsc <* QUERY ( pdr <* USEDIN(sc,
        'PLANT_SPATIAL_CONFIGURATION.' +
        'PROPERTY_DEFINITION_REPRESENTATION.DEFINITION') | (pdr.
        used_representation.name = 'design service characteristics') )
         | (SIZEOF(QUERY ( it <* dsc.used_representation.items | ((
        'PLANT_SPATIAL_CONFIGURATION.MEASURE_REPRESENTATION_ITEM'
        IN TYPEOF(it)) AND (it.name = 'pressure')) )) <= 1) )) = 1)) ))
        = 0));
wr6 : ((NOT (SIZEOF(QUERY ( pd <* USEDIN(SELF,
        'PLANT_SPATIAL_CONFIGURATION.PROPERTY_DEFINITION.DEFINITION')
        | (pd.name = 'hvac service characteristics') )) >= 1)) OR
        (SIZEOF(QUERY ( sc <* QUERY ( pd <* USEDIN(SELF,
        'PLANT_SPATIAL_CONFIGURATION.PROPERTY_DEFINITION.DEFINITION')
        | (pd.name = 'hvac service characteristics') ) | (NOT (
        SIZEOF(QUERY ( dsc <* QUERY ( pdr <* USEDIN(sc,
        'PLANT_SPATIAL_CONFIGURATION.' +
        'PROPERTY_DEFINITION_REPRESENTATION.DEFINITION') | (pdr.
        used_representation.name = 'design service characteristics') )
```

 © ISO 2001 — All rights reserved

```
        | (SIZEOF(QUERY ( it <* dsc.used_representation.items | ((
        'PLANT_SPATIAL_CONFIGURATION.MEASURE_REPRESENTATION_ITEM'
        IN TYPEOF(it)) AND (it.name = 'minimum pressure')) )) <= 1) ))
        = 1)) )) = 0));
wr7 : ((NOT (SIZEOF(QUERY ( pd <* USEDIN(SELF,
        'PLANT_SPATIAL_CONFIGURATION.PROPERTY_DEFINITION.DEFINITION')
        | (pd.name = 'hvac service characteristics') )) >= 1)) OR
        (SIZEOF(QUERY ( sc <* QUERY ( pd <* USEDIN(SELF,
        'PLANT_SPATIAL_CONFIGURATION.PROPERTY_DEFINITION.DEFINITION')
        | (pd.name = 'hvac service characteristics') ) | (NOT (
        SIZEOF(QUERY ( dsc <* QUERY ( pdr <* USEDIN(sc,
        'PLANT_SPATIAL_CONFIGURATION.' +
        'PROPERTY_DEFINITION_REPRESENTATION.DEFINITION') | (pdr.
        used_representation.name = 'design service characteristics') )
        | (SIZEOF(QUERY ( it <* dsc.used_representation.items | ((
        'PLANT_SPATIAL_CONFIGURATION.MEASURE_REPRESENTATION_ITEM'
        IN TYPEOF(it)) AND (it.name = 'maximum pressure')) )) <= 1) ))
        = 1)) )) = 0));
wr8 : ((NOT (SIZEOF(QUERY ( pd <* USEDIN(SELF,
        'PLANT_SPATIAL_CONFIGURATION.PROPERTY_DEFINITION.DEFINITION')
        | (pd.name = 'hvac service characteristics') )) >= 1)) OR
        (SIZEOF(QUERY ( sc <* QUERY ( pd <* USEDIN(SELF,
        'PLANT_SPATIAL_CONFIGURATION.PROPERTY_DEFINITION.DEFINITION')
        | (pd.name = 'hvac service characteristics') ) | (NOT (
        SIZEOF(QUERY ( dsc <* QUERY ( pdr <* USEDIN(sc,
        'PLANT_SPATIAL_CONFIGURATION.' +
        'PROPERTY_DEFINITION_REPRESENTATION.DEFINITION') | (pdr.
        used_representation.name = 'design service characteristics') )
        | ((1 <= SIZEOF(QUERY ( it <* dsc.used_representation.
        items | ((SIZEOF(TYPEOF(it) * [
        'PLANT_SPATIAL_CONFIGURATION.MEASURE_REPRESENTATION_ITEM',
        'PLANT_SPATIAL_CONFIGURATION.' +
        'THERMODYNAMIC_TEMPERATURE_MEASURE_WITH_UNIT']) = 2) AND (
        it.name IN ['temperature','minimum temperature',
        'maximum temperature'])) ))) AND (SIZEOF(QUERY ( it <* dsc.
        used_representation.items | ((SIZEOF(TYPEOF(it) * [
        'PLANT_SPATIAL_CONFIGURATION.MEASURE_REPRESENTATION_ITEM',
        'PLANT_SPATIAL_CONFIGURATION.' +
        'THERMODYNAMIC_TEMPERATURE_MEASURE_WITH_UNIT']) = 2) AND (
        it.name IN ['temperature','minimum temperature',
        'maximum temperature'])) )) <= 2)) )) = 1)) )) = 0));
wr9 : ((NOT (SIZEOF(QUERY ( pd <* USEDIN(SELF,
        'PLANT_SPATIAL_CONFIGURATION.PROPERTY_DEFINITION.DEFINITION')
        | (pd.name = 'hvac service characteristics') )) >= 1)) OR
        (SIZEOF(QUERY ( sc <* QUERY ( pd <* USEDIN(SELF,
        'PLANT_SPATIAL_CONFIGURATION.PROPERTY_DEFINITION.DEFINITION')
        | (pd.name = 'hvac service characteristics') ) | (NOT (
        SIZEOF(QUERY ( dsc <* QUERY ( pdr <* USEDIN(sc,
        'PLANT_SPATIAL_CONFIGURATION.' +
        'PROPERTY_DEFINITION_REPRESENTATION.DEFINITION') | (pdr.
        used_representation.name = 'design service characteristics') )
        | (SIZEOF(QUERY ( it <* dsc.used_representation.items | ((
        SIZEOF(TYPEOF(it) * [
        'PLANT_SPATIAL_CONFIGURATION.MEASURE_REPRESENTATION_ITEM',
```

© ISO 2001 — All rights reserved

```
            'PLANT_SPATIAL_CONFIGURATION.' +
            'THERMODYNAMIC_TEMPERATURE_MEASURE_WITH_UNIT']) = 2) AND (
            it.name = 'temperature')) )) <= 1) )) = 1)) )) = 0));
    wr10: ((NOT (SIZEOF(QUERY ( pd <* USEDIN(SELF,
            'PLANT_SPATIAL_CONFIGURATION.PROPERTY_DEFINITION.DEFINITION')
            | (pd.name = 'hvac service characteristics') )) >= 1)) OR
            (SIZEOF(QUERY ( sc <* QUERY ( pd <* USEDIN(SELF,
            'PLANT_SPATIAL_CONFIGURATION.PROPERTY_DEFINITION.DEFINITION')
            | (pd.name = 'hvac service characteristics') ) | (NOT (
            SIZEOF(QUERY ( dsc <* QUERY ( pdr <* USEDIN(sc,
            'PLANT_SPATIAL_CONFIGURATION.' +
            'PROPERTY_DEFINITION_REPRESENTATION.DEFINITION') | (pdr.
            used_representation.name = 'design service characteristics') )
             | (SIZEOF(QUERY ( it <* dsc.used_representation.items | ((
            SIZEOF(TYPEOF(it) * [
            'PLANT_SPATIAL_CONFIGURATION.MEASURE_REPRESENTATION_ITEM',
            'PLANT_SPATIAL_CONFIGURATION.' +
            'THERMODYNAMIC_TEMPERATURE_MEASURE_WITH_UNIT']) = 2) AND (
            it.name = 'minimum temperature')) )) <= 1) )) = 1)) )) = 0));
    wr11: ((NOT (SIZEOF(QUERY ( pd <* USEDIN(SELF,
            'PLANT_SPATIAL_CONFIGURATION.PROPERTY_DEFINITION.DEFINITION')
            | (pd.name = 'hvac service characteristics') )) >= 1)) OR
            (SIZEOF(QUERY ( sc <* QUERY ( pd <* USEDIN(SELF,
            'PLANT_SPATIAL_CONFIGURATION.PROPERTY_DEFINITION.DEFINITION')
            | (pd.name = 'hvac service characteristics') ) | (NOT (
            SIZEOF(QUERY ( dsc <* QUERY ( pdr <* USEDIN(sc,
            'PLANT_SPATIAL_CONFIGURATION.' +
            'PROPERTY_DEFINITION_REPRESENTATION.DEFINITION') | (pdr.
            used_representation.name = 'design service characteristics') )
             | (SIZEOF(QUERY ( it <* dsc.used_representation.items | ((
            SIZEOF(TYPEOF(it) * [
            'PLANT_SPATIAL_CONFIGURATION.MEASURE_REPRESENTATION_ITEM',
            'PLANT_SPATIAL_CONFIGURATION.' +
            'THERMODYNAMIC_TEMPERATURE_MEASURE_WITH_UNIT']) = 2) AND (
            it.name = 'maximum temperature')) )) <= 1) )) = 1)) )) = 0));
    wr12: ((NOT (SELF\shape_aspect.of_shape\property_definition.
            definition\product_definition.frame_of_reference\
            application_context_element.name IN [
            'functional definition','functional occurrence'])) OR (
            SIZEOF(QUERY ( pdr <* USEDIN(SELF,
            'PLANT_SPATIAL_CONFIGURATION.' +
            'PROPERTY_DEFINITION_REPRESENTATION.DEFINITION') | (
            'PLANT_SPATIAL_CONFIGURATION.SHAPE_REPRESENTATION' IN
            TYPEOF(pdr.used_representation)) )) = 0));
END_ENTITY; -- hvac_connector

ENTITY hvac_fitting_class
  SUBTYPE OF (group);
  WHERE
    wr1: (SIZEOF(QUERY ( aca <* QUERY ( ca <* USEDIN(SELF,
           'PLANT_SPATIAL_CONFIGURATION.CLASSIFICATION_ASSIGNMENT.' +
```

 © ISO 2001 — All rights reserved

```
            'ASSIGNED_CLASS') |

('PLANT_SPATIAL_CONFIGURATION.APPLIED_CLASSIFICATION_ASSIGNMENT'
            IN TYPEOF(ca)) ) | (NOT (SIZEOF(QUERY ( it <* aca.items | (
            NOT
('PLANT_SPATIAL_CONFIGURATION.HVAC_COMPONENT_DEFINITION'
            IN TYPEOF(it))) )) = 0)) )) = 0);
     wr2: (SIZEOF(QUERY ( aca <* QUERY ( ca <* USEDIN(SELF,
            'PLANT_SPATIAL_CONFIGURATION.CLASSIFICATION_ASSIGNMENT.' +
            'ASSIGNED_CLASS') |

('PLANT_SPATIAL_CONFIGURATION.APPLIED_CLASSIFICATION_ASSIGNMENT'
            IN TYPEOF(ca)) ) | (NOT (SIZEOF(QUERY ( pcd <*
            QUERY ( it <* aca.items | (
            'PLANT_SPATIAL_CONFIGURATION.HVAC_COMPONENT_DEFINITION' IN
            TYPEOF(it)) ) | (NOT (SIZEOF(QUERY ( aca1 <* USEDIN(pcd.
            formation.of_product,'PLANT_SPATIAL_CONFIGURATION.' +
            'APPLIED_CLASSIFICATION_ASSIGNMENT.ITEMS') | class_in_tree(
            aca1.assigned_class,'hvac fitting') )) = 1)) )) = 0)) )) = 0);
  END_ENTITY; -- hvac_fitting_class

  ENTITY hvac_plant_item_branch_connection
    SUBTYPE OF (shape_aspect_relationship);
    WHERE
     wr1: (SELF.description = 'branch location');
     wr2:
('PLANT_SPATIAL_CONFIGURATION.HVAC_SECTION_SEGMENT_DEFINITION'
            IN TYPEOF(SELF.relating_shape_aspect.of_shape.definition));
     wr3: ('PLANT_SPATIAL_CONFIGURATION.HVAC_CONNECTOR' IN TYPEOF(SELF.
            related_shape_aspect));
  END_ENTITY; -- hvac_plant_item_branch_connection

  ENTITY hvac_plant_item_connection
    SUBTYPE OF (shape_aspect_relationship);
    WHERE
     wr1:
('PLANT_SPATIAL_CONFIGURATION.HVAC_SECTION_SEGMENT_TERMINATION'
            IN TYPEOF(SELF.relating_shape_aspect));
     wr2: ('PLANT_SPATIAL_CONFIGURATION.HVAC_CONNECTOR' IN TYPEOF(SELF.
            related_shape_aspect));
     wr3: (SELF\shape_aspect_relationship.related_shape_aspect.of_shape\
            property_definition.definition\product_definition.
            frame_of_reference\application_context_element.name =
            'physical occurrence');
  END_ENTITY; -- hvac_plant_item_connection

  ENTITY hvac_cross_section
    SUBTYPE OF (shape_aspect);
  END_ENTITY; -- hvac_section

  ENTITY hvac_section_segment_definition
    SUBTYPE OF (product_definition);
    WHERE
     wr1 : (SIZEOF(QUERY ( pdr <* USEDIN(SELF,
```

© ISO 2001 — All rights reserved

```
            'PLANT_SPATIAL_CONFIGURATION.' +

'PRODUCT_DEFINITION_RELATIONSHIP.RELATED_PRODUCT_DEFINITION')
            |
('PLANT_SPATIAL_CONFIGURATION.HVAC_SYSTEM_SECTION_DEFINITION'
            IN TYPEOF(pdr.relating_product_definition)) )) >= 1);
    wr2 : (SIZEOF(QUERY ( pd <* USEDIN(SELF,
            'PLANT_SPATIAL_CONFIGURATION.PROPERTY_DEFINITION.DEFINITION')
            | ('PLANT_SPATIAL_CONFIGURATION.SHAPE_DEFINITION' IN
            TYPEOF(pd)) )) >= 1);
    wr3 : (SELF.frame_of_reference\application_context_element.name =
            'functional definition');
    wr4 : (SIZEOF(QUERY ( pdr <* USEDIN(SELF,
            'PLANT_SPATIAL_CONFIGURATION.' +
            'PROPERTY_DEFINITION_REPRESENTATION.DEFINITION') | (pdr.
            used_representation.name =
            'hvac section segment characteristics') )) = 1);
    wr5 : (SIZEOF(QUERY ( hssc <* QUERY ( pdr <* USEDIN(SELF,
            'PLANT_SPATIAL_CONFIGURATION.' +
            'PROPERTY_DEFINITION_REPRESENTATION.DEFINITION') | (pdr.
            used_representation.name =
            'hvac section segment characteristics') ) | (NOT ((1 <=
            SIZEOF(QUERY ( it <* hssc.used_representation.items | (it.
            name IN ['pressure drop','maximum pressure drop',
            'minimum pressure drop ']) ))) AND (SIZEOF(QUERY ( it <*
            hssc.used_representation.items | (it.name IN [
            'pressure drop','maximum pressure drop',
            'minimum pressure drop ']) )) <= 2))) )) = 0);
    wr6 : (SIZEOF(QUERY ( hssc <* QUERY ( pdr <* USEDIN(SELF,
            'PLANT_SPATIAL_CONFIGURATION.' +
            'PROPERTY_DEFINITION_REPRESENTATION.DEFINITION') | (pdr.
            used_representation.name =
            'hvac section segment characteristics') ) | (NOT (SIZEOF(
            QUERY ( it <* hssc.used_representation.items | ((
            'PLANT_SPATIAL_CONFIGURATION.MEASURE_REPRESENTATION_ITEM'
            IN TYPEOF(it)) AND (it.name = 'pressure drop')) )) <= 1)) ))
            = 0);
    wr7 : (SIZEOF(QUERY ( hssc <* QUERY ( pdr <* USEDIN(SELF,
            'PLANT_SPATIAL_CONFIGURATION.' +
            'PROPERTY_DEFINITION_REPRESENTATION.DEFINITION') | (pdr.
            used_representation.name =
            'hvac section segment characteristics') ) | (NOT (SIZEOF(
            QUERY ( it <* hssc.used_representation.items | ((
            'PLANT_SPATIAL_CONFIGURATION.MEASURE_REPRESENTATION_ITEM'
            IN TYPEOF(it)) AND (it.name = 'minimum pressure drop')) ))
            <= 1)) )) = 0);
    wr8 : (SIZEOF(QUERY ( hssc <* QUERY ( pdr <* USEDIN(SELF,
            'PLANT_SPATIAL_CONFIGURATION.' +
            'PROPERTY_DEFINITION_REPRESENTATION.DEFINITION') | (pdr.
            used_representation.name =
            'hvac section segment characteristics') ) | (NOT (SIZEOF(
```

 © ISO 2001 — All rights reserved

```
        QUERY ( it <* hssc.used_representation.items | ((
        'PLANT_SPATIAL_CONFIGURATION.MEASURE_REPRESENTATION_ITEM'
        IN TYPEOF(it)) AND (it.name = 'maximum pressure drop')) ))
        <= 1)) )) = 0);
    wr9 : ((NOT (SIZEOF(QUERY ( pdr <* USEDIN(SELF,
        'PLANT_SPATIAL_CONFIGURATION.' +

'PRODUCT_DEFINITION_RELATIONSHIP.RELATED_PRODUCT_DEFINITION')
        | (pdr.name = 'hvac segment insulation') )) >= 1)) OR (
        SIZEOF(QUERY ( si <* QUERY ( pdr <* USEDIN(SELF,
        'PLANT_SPATIAL_CONFIGURATION.' +

'PRODUCT_DEFINITION_RELATIONSHIP.RELATED_PRODUCT_DEFINITION')
        | (pdr.name = 'hvac segment insulation') ) | (NOT (SIZEOF(
        QUERY ( pd <* USEDIN(si,
        'PLANT_SPATIAL_CONFIGURATION.PROPERTY_DEFINITION.DEFINITION')
        | (NOT (SIZEOF(QUERY ( pds <* QUERY ( pdr <* USEDIN(pd,
        'PLANT_SPATIAL_CONFIGURATION.' +
        'PROPERTY_DEFINITION_REPRESENTATION.DEFINITION') | (
        'PLANT_SPATIAL_CONFIGURATION.PRODUCT_DEFINITION_SHAPE' IN
        TYPEOF(pdr)) ) | (pds.used_representation.name =
        'hvac segment insulation characteristics') )) = 1)) )) = 0)) ))
        = 0));
    wr10: ((NOT (SIZEOF(QUERY ( pdr <* USEDIN(SELF,
        'PLANT_SPATIAL_CONFIGURATION.' +

'PRODUCT_DEFINITION_RELATIONSHIP.RELATED_PRODUCT_DEFINITION')
        | (pdr.name = 'hvac segment insulation') )) >= 1)) OR (
        SIZEOF(QUERY ( si <* QUERY ( pdr <* USEDIN(SELF,
        'PLANT_SPATIAL_CONFIGURATION.' +

'PRODUCT_DEFINITION_RELATIONSHIP.RELATED_PRODUCT_DEFINITION')
        | (pdr.name = 'hvac segment insulation') ) | (NOT (SIZEOF(
        QUERY ( pd <* USEDIN(si,
        'PLANT_SPATIAL_CONFIGURATION.PROPERTY_DEFINITION.DEFINITION')
        | (NOT (SIZEOF(QUERY ( sic <* QUERY ( pds <*
        QUERY ( pdr <* USEDIN(pd,'PLANT_SPATIAL_CONFIGURATION.' +
        'PROPERTY_DEFINITION_REPRESENTATION.DEFINITION') | (
        'PLANT_SPATIAL_CONFIGURATION.PRODUCT_DEFINITION_SHAPE' IN
        TYPEOF(pdr)) ) | (pds.used_representation.name =
        'hvac segment insulation characteristics') ) | (SIZEOF(sic.
        used_representation.items) >= 1) )) = 1)) )) = 0)) )) = 0));
    wr11: ((NOT (SIZEOF(QUERY ( pdr <* USEDIN(SELF,
        'PLANT_SPATIAL_CONFIGURATION.' +

'PRODUCT_DEFINITION_RELATIONSHIP.RELATED_PRODUCT_DEFINITION')
        | (pdr.name = 'hvac segment insulation') )) >= 1)) OR (
        SIZEOF(QUERY ( si <* QUERY ( pdr <* USEDIN(SELF,
        'PLANT_SPATIAL_CONFIGURATION.' +

'PRODUCT_DEFINITION_RELATIONSHIP.RELATED_PRODUCT_DEFINITION')
        | (pdr.name = 'hvac segment insulation') ) | (NOT (SIZEOF(
        QUERY ( pd <* USEDIN(si,
        'PLANT_SPATIAL_CONFIGURATION.PROPERTY_DEFINITION.DEFINITION')
```

© ISO 2001 — All rights reserved

```
        | (NOT (SIZEOF(QUERY ( sic <* QUERY ( pds <*
        QUERY ( pdr <* USEDIN(pd,'PLANT_SPATIAL_CONFIGURATION.' +
        'PROPERTY_DEFINITION_REPRESENTATION.DEFINITION') | (
        'PLANT_SPATIAL_CONFIGURATION.PRODUCT_DEFINITION_SHAPE' IN
        TYPEOF(pdr)) ) | (pds.used_representation.name =
        'hvac segment insulation characteristics') ) | ((1 <=
        SIZEOF(QUERY ( it <* sic.used_representation.items | ((
        SIZEOF(TYPEOF(it) * [
        'PLANT_SPATIAL_CONFIGURATION.MEASURE_REPRESENTATION_ITEM',
        'PLANT_SPATIAL_CONFIGURATION.LENGTH_MEASURE_WITH_UNIT']) =
        2) AND (it.name IN ['thickness','minimum thickness',
        'maximum thickness'])) ))) AND (SIZEOF(QUERY ( it <* sic.
        used_representation.items | ((SIZEOF(TYPEOF(it) * [
        'PLANT_SPATIAL_CONFIGURATION.MEASURE_REPRESENTATION_ITEM',
        'PLANT_SPATIAL_CONFIGURATION.LENGTH_MEASURE_WITH_UNIT']) =
        2) AND (it.name IN ['thickness','minimum thickness',
        'maximum thickness'])) )) <= 2)) )) = 1)) )) = 0)) )) = 0));
    wr12: ((NOT (SIZEOF(QUERY ( pdr <* USEDIN(SELF,
        'PLANT_SPATIAL_CONFIGURATION.' +

'PRODUCT_DEFINITION_RELATIONSHIP.RELATED_PRODUCT_DEFINITION')
        | (pdr.name = 'hvac segment insulation') )) >= 1)) OR (
        SIZEOF(QUERY ( si <* QUERY ( pdr <* USEDIN(SELF,
        'PLANT_SPATIAL_CONFIGURATION.' +

'PRODUCT_DEFINITION_RELATIONSHIP.RELATED_PRODUCT_DEFINITION')
        | (pdr.name = 'hvac segment insulation') ) | (NOT (SIZEOF(
        QUERY ( pd <* USEDIN(si,
        'PLANT_SPATIAL_CONFIGURATION.PROPERTY_DEFINITION.DEFINITION')
        | (NOT (SIZEOF(QUERY ( sic <* QUERY ( pds <*
        QUERY ( pdr <* USEDIN(pd,'PLANT_SPATIAL_CONFIGURATION.' +
        'PROPERTY_DEFINITION_REPRESENTATION.DEFINITION') | (
        'PLANT_SPATIAL_CONFIGURATION.PRODUCT_DEFINITION_SHAPE' IN
        TYPEOF(pdr)) ) | (pds.used_representation.name =
        'segment insulation characteristics') ) | (SIZEOF(
        QUERY ( it <* sic.used_representation.items | ((SIZEOF(
        TYPEOF(it) * [
        'PLANT_SPATIAL_CONFIGURATION.MEASURE_REPRESENTATION_ITEM',
        'PLANT_SPATIAL_CONFIGURATION.LENGTH_MEASURE_WITH_UNIT']) =
        2) AND (it.name = 'thickness')) )) <= 1) )) = 1)) )) = 0)) ))
        = 0));
    wr13: ((NOT (SIZEOF(QUERY ( pdr <* USEDIN(SELF,
        'PLANT_SPATIAL_CONFIGURATION.' +

'PRODUCT_DEFINITION_RELATIONSHIP.RELATED_PRODUCT_DEFINITION')
        | (pdr.name = 'segment insulation') )) >= 1)) OR (SIZEOF(
        QUERY ( si <* QUERY ( pdr <* USEDIN(SELF,
        'PLANT_SPATIAL_CONFIGURATION.' +

'PRODUCT_DEFINITION_RELATIONSHIP.RELATED_PRODUCT_DEFINITION')
        | (pdr.name = 'hvac segment insulation') ) | (NOT (SIZEOF(
```

 © ISO 2001 — All rights reserved

```
            QUERY ( pd <* USEDIN(si,
            'PLANT_SPATIAL_CONFIGURATION.PROPERTY_DEFINITION.DEFINITION')
            | (NOT (SIZEOF(QUERY ( sic <* QUERY ( pds <*
            QUERY ( pdr <* USEDIN(pd,'PLANT_SPATIAL_CONFIGURATION.' +
            'PROPERTY_DEFINITION_REPRESENTATION.DEFINITION') | (
            'PLANT_SPATIAL_CONFIGURATION.PRODUCT_DEFINITION_SHAPE' IN
            TYPEOF(pdr)) ) | (pds.used_representation.name =
            'hvac segment insulation characteristics') ) | (SIZEOF(
            QUERY ( it <* sic.used_representation.items | ((SIZEOF(
            TYPEOF(it) * [
            'PLANT_SPATIAL_CONFIGURATION.MEASURE_REPRESENTATION_ITEM',
            'PLANT_SPATIAL_CONFIGURATION.LENGTH_MEASURE_WITH_UNIT']) =
            2) AND (it.name = 'minimum thickness')) )) <= 1) )) = 1)) ))
            = 0)) )) = 0));
    wr14: ((NOT (SIZEOF(QUERY ( pdr <* USEDIN(SELF,
            'PLANT_SPATIAL_CONFIGURATION.' +

'PRODUCT_DEFINITION_RELATIONSHIP.RELATED_PRODUCT_DEFINITION')
            | (pdr.name = 'hvac segment insulation') )) >= 1)) OR (
            SIZEOF(QUERY ( si <* QUERY ( pdr <* USEDIN(SELF,
            'PLANT_SPATIAL_CONFIGURATION.' +

'PRODUCT_DEFINITION_RELATIONSHIP.RELATED_PRODUCT_DEFINITION')
            | (pdr.name = 'hvac segment insulation') ) | (NOT (SIZEOF(
            QUERY ( pd <* USEDIN(si,
            'PLANT_SPATIAL_CONFIGURATION.PROPERTY_DEFINITION.DEFINITION')
            | (NOT (SIZEOF(QUERY ( sic <* QUERY ( pds <*
            QUERY ( pdr <* USEDIN(pd,'PLANT_SPATIAL_CONFIGURATION.' +
            'PROPERTY_DEFINITION_REPRESENTATION.DEFINITION') | (
            'PLANT_SPATIAL_CONFIGURATION.PRODUCT_DEFINITION_SHAPE' IN
            TYPEOF(pdr)) ) | (pds.used_representation.name =
            'hvac segment insulation characteristics') ) | (SIZEOF(
            QUERY ( it <* sic.used_representation.items | ((SIZEOF(
            TYPEOF(it) * [
            'PLANT_SPATIAL_CONFIGURATION.MEASURE_REPRESENTATION_ITEM',
            'PLANT_SPATIAL_CONFIGURATION.LENGTH_MEASURE_WITH_UNIT']) =
            2) AND (it.name = 'maximum thickness')) )) <= 1) )) = 1)) ))
            = 0)) )) = 0));
    wr15: (SIZEOF(QUERY ( pds <* QUERY ( pd <* USEDIN(SELF,
            'PLANT_SPATIAL_CONFIGURATION.PROPERTY_DEFINITION.DEFINITION')
            | ('PLANT_SPATIAL_CONFIGURATION.PRODUCT_DEFINITION_SHAPE'
            IN TYPEOF(pd)) ) | (NOT (SIZEOF(QUERY ( sa <* USEDIN(pds,
            'PLANT_SPATIAL_CONFIGURATION.SHAPE_ASPECT.OF_SHAPE') |

('PLANT_SPATIAL_CONFIGURATION.HVAC_SECTION_SEGMENT_TERMINATION'
            IN TYPEOF(sa)) )) = 2)) )) = 0);
  END_ENTITY; -- hvac_section_segment_definition

  ENTITY hvac_section_segment_termination
    SUBTYPE OF (shape_aspect);
    WHERE
      wr1: (SIZEOF(QUERY ( sar <* (USEDIN(SELF,
             'PLANT_SPATIAL_CONFIGURATION.' +
             'SHAPE_ASPECT_RELATIONSHIP.RELATING_SHAPE_ASPECT') + USEDIN(
```

© ISO 2001 — All rights reserved

```
            SELF,'PLANT_SPATIAL_CONFIGURATION.' +
            'SHAPE_ASPECT_RELATIONSHIP.RELATED_SHAPE_ASPECT')) | (NOT (
            SIZEOF(TYPEOF(sar) * [
            'PLANT_SPATIAL_CONFIGURATION.HVAC_BRANCH_CONNECTION',
            'PLANT_SPATIAL_CONFIGURATION.HVAC_PLANT_ITEM_CONNECTION',
            'PLANT_SPATIAL_CONFIGURATION.HVAC_TERMINATION_CONNECTION'])
            = 1)) )) = 0);
    wr2: (SIZEOF(QUERY ( sar <* USEDIN(SELF,
            'PLANT_SPATIAL_CONFIGURATION.' +
            'SHAPE_ASPECT_RELATIONSHIP.RELATED_SHAPE_ASPECT') | (SIZEOF(
            TYPEOF(sar) * [
            'PLANT_SPATIAL_CONFIGURATION.HVAC_BRANCH_CONNECTION',
            'PLANT_SPATIAL_CONFIGURATION.HVAC_PLANT_ITEM_CONNECTION']) =
             1) )) = 1);
  END_ENTITY; -- hvac_section_segment_termination

  ENTITY hvac_system
    SUBTYPE OF (product_definition);
    WHERE
     wr1: (SIZEOF(QUERY ( pdr <* USEDIN(SELF,
            'PLANT_SPATIAL_CONFIGURATION.' +
            'PRODUCT_DEFINITION_RELATIONSHIP.RELATED_PRODUCT_DEFINITION')
            | (('PLANT_SPATIAL_CONFIGURATION.PLANT' IN TYPEOF(pdr.
            relating_product_definition.formation.of_product)) AND (pdr.
            relating_product_definition.frame_of_reference.name =
            'functional occurrence')) )) = 1);
  END_ENTITY; -- hvac_system

  ENTITY hvac_system_section_definition
    SUBTYPE OF (product_definition);
    WHERE
     wr1: (SIZEOF(QUERY ( pdr <* USEDIN(SELF,
            'PLANT_SPATIAL_CONFIGURATION.' +
            'PRODUCT_DEFINITION_RELATIONSHIP.RELATED_PRODUCT_DEFINITION')
            | ('PLANT_SPATIAL_CONFIGURATION.HVAC_SYSTEM' IN TYPEOF(pdr.
            relating_product_definition)) )) = 1);
    wr2: (SIZEOF(QUERY ( pdr <* USEDIN(SELF,
            'PLANT_SPATIAL_CONFIGURATION.' +

'PRODUCT_DEFINITION_RELATIONSHIP.RELATING_PRODUCT_DEFINITION')
            |
('PLANT_SPATIAL_CONFIGURATION.HVAC_SECTION_SEGMENT_DEFINITION'
            IN TYPEOF(pdr.related_product_definition)) )) >= 1);
    wr3: (SELF.frame_of_reference.name = 'functional definition');
    wr4: (SIZEOF(QUERY ( pds <* QUERY ( pd <* USEDIN(SELF,
            'PLANT_SPATIAL_CONFIGURATION.PROPERTY_DEFINITION.DEFINITION')
            | ('PLANT_SPATIAL_CONFIGURATION.PRODUCT_DEFINITION_SHAPE'
            IN TYPEOF(pd)) ) | (NOT (SIZEOF(QUERY ( sa <* USEDIN(pds,
            'PLANT_SPATIAL_CONFIGURATION.SHAPE_ASPECT.OF_SHAPE') |

(('PLANT_SPATIAL_CONFIGURATION.HVAC_SECTION_SEGMENT_TERMINATION'
```

 © ISO 2001 — All rights reserved

```
            IN TYPEOF(sa)) AND (sa.description =
            'hvac system section termination')) )) <= 2)) )) = 0);
  END_ENTITY; -- hvac_system_section_definition

  ENTITY hvac_termination_connection
    SUBTYPE OF (shape_aspect_relationship);
    WHERE
      wr1:
('PLANT_SPATIAL_CONFIGURATION.HVAC_SECTION_SEGMENT_TERMINATION'
            IN TYPEOF(SELF.relating_shape_aspect));
      wr2:
('PLANT_SPATIAL_CONFIGURATION.HVAC_SECTION_SEGMENT_TERMINATION'
            IN TYPEOF(SELF.related_shape_aspect));
  END_ENTITY; -- hvac_termination_connection

  ENTITY hybrid_shape_representation
    SUBTYPE OF (shape_representation);
    WHERE
      wr1: (SIZEOF(QUERY ( i <* SELF\representation.items | (NOT (SIZEOF([
            'PLANT_SPATIAL_CONFIGURATION.BOOLEAN_RESULT',
            'PLANT_SPATIAL_CONFIGURATION.CSG_SOLID',
            'PLANT_SPATIAL_CONFIGURATION.RECTANGULAR_PYRAMID',
            'PLANT_SPATIAL_CONFIGURATION.BLOCK',
            'PLANT_SPATIAL_CONFIGURATION.TORUS',
            'PLANT_SPATIAL_CONFIGURATION.RIGHT_CIRCULAR_CYLINDER',
            'PLANT_SPATIAL_CONFIGURATION.SPHERE',
            'PLANT_SPATIAL_CONFIGURATION.RIGHT_CIRCULAR_CONE',
            'PLANT_SPATIAL_CONFIGURATION.EXTRUDED_AREA_SOLID',
            'PLANT_SPATIAL_CONFIGURATION.REVOLVED_AREA_SOLID',
            'PLANT_SPATIAL_CONFIGURATION.AXIS2_PLACEMENT_3D',
            'PLANT_SPATIAL_CONFIGURATION.MANIFOLD_SOLID_BREP',
            'PLANT_SPATIAL_CONFIGURATION.SHELL_BASED_WIREFRAME_MODEL',
            'PLANT_SPATIAL_CONFIGURATION.CURVE',
            'PLANT_SPATIAL_CONFIGURATION.POINT',
            'PLANT_SPATIAL_CONFIGURATION.SURFACE',
            'PLANT_SPATIAL_CONFIGURATION.VECTOR',
            'PLANT_SPATIAL_CONFIGURATION.MEASURE_REPRESENTATION_ITEM',
            'PLANT_SPATIAL_CONFIGURATION.MAPPED_ITEM'] * TYPEOF(i)) = 1)) ))
            = 0);
      wr2: (SIZEOF(QUERY ( mi <* QUERY ( item <* SELF\representation.items
             | ('PLANT_SPATIAL_CONFIGURATION.MAPPED_ITEM' IN TYPEOF(item)) )
             | (NOT (SIZEOF(['PLANT_SPATIAL_CONFIGURATION.' +
            'PLANT_CSG_SHAPE_REPRESENTATION',
            'PLANT_SPATIAL_CONFIGURATION.HYBRID_SHAPE_REPRESENTATION'] *
             TYPEOF(mi\mapped_item.mapping_source.mapped_representation))
            = 1)) )) = 0);
  END_ENTITY; -- hybrid_shape_representation

  ENTITY hyperbola
    SUBTYPE OF (conic);
      semi_axis      : positive_length_measure;
      semi_imag_axis : positive_length_measure;
  END_ENTITY; -- hyperbola
```

© ISO 2001 — All rights reserved

```
ENTITY id_attribute;
   attribute_value : identifier;
   identified_item : id_attribute_select;
END_ENTITY; -- id_attribute

ENTITY identification_assignment
  ABSTRACT SUPERTYPE;
   assigned_id : identifier;
   role        : identification_role;
END_ENTITY; -- identification_assignment

ENTITY identification_role;
   name        : label;
   description : OPTIONAL text;
END_ENTITY; -- identification_role

ENTITY inline_equipment
  SUBTYPE OF (piping_component_definition);
END_ENTITY; -- inline_equipment

ENTITY instrumentation_and_control_system
  SUBTYPE OF (product_definition);
  WHERE
   wr1: (SIZEOF(QUERY ( pdr <* USEDIN(SELF,
          'PLANT_SPATIAL_CONFIGURATION.' +
          'PRODUCT_DEFINITION_RELATIONSHIP.RELATED_PRODUCT_DEFINITION')
          | (('PLANT_SPATIAL_CONFIGURATION.PLANT' IN TYPEOF(pdr.
          relating_product_definition.formation.of_product)) AND (pdr.
          relating_product_definition.frame_of_reference.name =
          'functional occurrence')) )) = 1);
END_ENTITY; -- instrumentation_and_control_system

ENTITY interfering_shape_element
  SUBTYPE OF (shape_aspect, shape_aspect_relationship);
END_ENTITY; -- interfering_shape_element

ENTITY intersection_curve
  SUBTYPE OF (surface_curve);
  WHERE
   wr1: (SIZEOF(SELF\surface_curve.associated_geometry) = 2);
   wr2: (associated_surface(SELF\surface_curve.associated_geometry[1])
          <> associated_surface(SELF\surface_curve.associated_geometry
          [2]));
END_ENTITY; -- intersection_curve

ENTITY item_identified_representation_usage;
  name               : label;
  description        : OPTIONAL text;
  definition         : represented_definition;
  used_representation : representation;
  identified_item    : representation_item;
```

 © ISO 2001 — All rights reserved

```
  WHERE
    WR1: SELF.used_representation IN
         using_representations(SELF.identified_item);
  END_ENTITY; -- item_identified_representation_usage

  ENTITY known_source
    SUBTYPE OF (external_source, pre_defined_item);
    WHERE
      wr1: (SELF\pre_defined_item.name IN ['ISO 13584 Dictionary',
              'ISO 13584 Parts Library']);
  END_ENTITY; -- known_source

  ENTITY length_measure_with_unit
    SUBTYPE OF (measure_with_unit);
    WHERE
      wr1: ('PLANT_SPATIAL_CONFIGURATION.LENGTH_UNIT' IN
           TYPEOF(SELF\measure_with_unit.unit_component));
  END_ENTITY; -- length_measure_with_unit

  ENTITY length_unit
    SUBTYPE OF (named_unit);
    WHERE
      wr1: ((SELF\named_unit.dimensions.length_exponent = 1) AND (SELF\
              named_unit.dimensions.mass_exponent = 0) AND (SELF\
              named_unit.dimensions.time_exponent = 0) AND (SELF\
              named_unit.dimensions.electric_current_exponent = 0) AND (
              SELF\named_unit.dimensions.
              thermodynamic_temperature_exponent = 0) AND (SELF\named_unit
              .dimensions.amount_of_substance_exponent = 0) AND (SELF\
              named_unit.dimensions.luminous_intensity_exponent = 0));
  END_ENTITY; -- length_unit

  ENTITY line
    SUBTYPE OF (curve);
      pnt : cartesian_point;
      dir : vector;
    WHERE
      wr1: (dir.dim = pnt.dim);
  END_ENTITY; -- line

  ENTITY line_branch_connection
    SUBTYPE OF (shape_aspect_relationship);
    WHERE
      wr1: (SELF.description = 'branch location');
      wr2: ('PLANT_SPATIAL_CONFIGURATION.PLANT_LINE_SEGMENT_DEFINITION'
IN
               TYPEOF(SELF.relating_shape_aspect.of_shape.definition));
      wr3:
('PLANT_SPATIAL_CONFIGURATION.PLANT_LINE_SEGMENT_TERMINATION'
              IN TYPEOF(SELF.related_shape_aspect));
  END_ENTITY; -- line_branch_connection

  ENTITY line_less_piping_system
    SUBTYPE OF (product_definition);
```

© ISO 2001 — All rights reserved

```
  END_ENTITY; -- line_less_piping_system

  ENTITY line_plant_item_branch_connection
    SUBTYPE OF (shape_aspect_relationship);
  END_ENTITY; -- line_plant_item_branch_connection

  ENTITY line_plant_item_connection
    SUBTYPE OF (shape_aspect_relationship);
  WHERE
      wr1:
('PLANT_SPATIAL_CONFIGURATION.PLANT_LINE_SEGMENT_TERMINATION'
            IN TYPEOF(SELF.relating_shape_aspect));
      wr2: ('PLANT_SPATIAL_CONFIGURATION.PLANT_ITEM_CONNECTOR' IN
TYPEOF(
            SELF.related_shape_aspect));
      wr3: (SELF\shape_aspect_relationship.related_shape_aspect.of_shape\
            property_definition.definition\product_definition.
            frame_of_reference\application_context_element.name =
            'physical occurrence');
  END_ENTITY; -- line_plant_item_connection

  ENTITY line_termination_connection
    SUBTYPE OF (shape_aspect_relationship);
    WHERE
      wr1: (SIZEOF(TYPEOF(SELF.relating_shape_aspect) *
          ['PLANT_SPATIAL_CONFIGURATION.CONNECTION_NODE',
          'PLANT_SPATIAL_CONFIGURATION.PLANT_LINE_SEGMENT_TERMINATION'])
          >= 1);
      wr2:
('PLANT_SPATIAL_CONFIGURATION.PLANT_LINE_SEGMENT_TERMINATION'
            IN TYPEOF(SELF.related_shape_aspect));
  END_ENTITY; -- line_termination_connection

  ENTITY local_time;
      hour_component   : hour_in_day;
      minute_component : OPTIONAL minute_in_hour;
      second_component : OPTIONAL second_in_minute;
      zone             : coordinated_universal_time_offset;
    WHERE
      wr1: valid_time(SELF);
  END_ENTITY; -- local_time

  ENTITY loop
    SUPERTYPE OF (ONEOF (vertex_loop,edge_loop,poly_loop))
    SUBTYPE OF (topological_representation_item);
  END_ENTITY; -- loop

  ENTITY luminous_intensity_measure_with_unit
    SUBTYPE OF (measure_with_unit);
    WHERE
      wr1: ('PLANT_SPATIAL_CONFIGURATION.LUMINOUS_INTENSITY_UNIT' IN
```

 © ISO 2001 — All rights reserved

```
        TYPEOF(SELF\measure_with_unit.unit_component));
END_ENTITY; -- luminous_intensity_measure_with_unit

ENTITY luminous_intensity_unit
  SUBTYPE OF (named_unit);
  WHERE
    wr1: ((SELF\named_unit.dimensions.length_exponent = 0) AND (SELF\
           named_unit.dimensions.mass_exponent = 0) AND (SELF\
           named_unit.dimensions.time_exponent = 0) AND (SELF\
           named_unit.dimensions.electric_current_exponent = 0) AND (
           SELF\named_unit.dimensions.
           thermodynamic_temperature_exponent = 0) AND (SELF\named_unit
           .dimensions.amount_of_substance_exponent = 0) AND (SELF\
           named_unit.dimensions.luminous_intensity_exponent = 1));
END_ENTITY; -- luminous_intensity_unit

ENTITY make_from_usage_option
  SUBTYPE OF (product_definition_usage);
    ranking          : INTEGER;
    ranking_rationale : text;
    quantity         : measure_with_unit;
  WHERE
    wr1: ((NOT ('NUMBER' IN TYPEOF(quantity.value_component))) OR (
           quantity.value_component > 0));
END_ENTITY; -- make_from_usage_option

ENTITY manifold_solid_brep
  SUBTYPE OF (solid_model);
    outer : closed_shell;
END_ENTITY; -- manifold_solid_brep

ENTITY mapped_item
  SUBTYPE OF (representation_item);
    mapping_source : representation_map;
    mapping_target : representation_item;
  WHERE
    wr1: acyclic_mapped_representation(using_representations(SELF),[SELF]);
END_ENTITY; -- mapped_item

ENTITY mass_measure_with_unit
  SUBTYPE OF (measure_with_unit);
  WHERE
    wr1: ('PLANT_SPATIAL_CONFIGURATION.MASS_UNIT' IN
        TYPEOF(SELF\measure_with_unit.unit_component));
END_ENTITY; -- mass_measure_with_unit

ENTITY mass_unit
  SUBTYPE OF (named_unit);
  WHERE
    wr1: ((SELF\named_unit.dimensions.length_exponent = 0) AND (SELF\
           named_unit.dimensions.mass_exponent = 1) AND (SELF\
           named_unit.dimensions.time_exponent = 0) AND (SELF\
           named_unit.dimensions.electric_current_exponent = 0) AND (
           SELF\named_unit.dimensions.
```

© ISO 2001 — All rights reserved

```
            thermodynamic_temperature_exponent = 0) AND (SELF\named_unit
            .dimensions.amount_of_substance_exponent = 0) AND (SELF\
            named_unit.dimensions.luminous_intensity_exponent = 0));
END_ENTITY; -- mass_unit

ENTITY material_designation;
   name        : label;
   definitions : SET [1:?] OF characterized_definition;
END_ENTITY; -- material_designation

ENTITY material_designation_characterization;
   name        : label;
   description : text;
   designation : material_designation;
   property    : characterized_material_property;
END_ENTITY; -- material_designation_characterization

ENTITY material_property
  SUBTYPE OF (property_definition);
  WHERE
   wr1: (('PLANT_SPATIAL_CONFIGURATION.CHARACTERIZED_OBJECT' IN
            TYPEOF(SELF\property_definition.definition)) OR (SIZEOF(
            bag_to_set(USEDIN(SELF,
            'PLANT_SPATIAL_CONFIGURATION.' +
            'PROPERTY_DEFINITION_REPRESENTATION.DEFINITION')) -
            QUERY ( temp <* bag_to_set(USEDIN(SELF,
            'PLANT_SPATIAL_CONFIGURATION.' +
            'PROPERTY_DEFINITION_REPRESENTATION.DEFINITION')) | ((
            'PLANT_SPATIAL_CONFIGURATION.' +
            'MATERIAL_PROPERTY_REPRESENTATION') IN TYPEOF(temp)) )) = 0));
END_ENTITY; -- material_property

ENTITY material_property_representation
  SUBTYPE OF (property_definition_representation);
   dependent_environment : data_environment;
END_ENTITY; -- material_property_representation

ENTITY measure_representation_item
  SUBTYPE OF (representation_item, measure_with_unit);
END_ENTITY; -- measure_representation_item

ENTITY measure_with_unit
  SUPERTYPE OF (ONEOF (length_measure_with_unit,mass_measure_with_unit,
     time_measure_with_unit,electric_current_measure_with_unit,
     thermodynamic_temperature_measure_with_unit,
     amount_of_substance_measure_with_unit,
     luminous_intensity_measure_with_unit,plane_angle_measure_with_unit,
     solid_angle_measure_with_unit,ratio_measure_with_unit));
   value_component : measure_value;
   unit_component  : unit;
  WHERE
```

 © ISO 2001 — All rights reserved

```
    wr1: valid_units(SELF);
END_ENTITY; -- measure_with_unit

ENTITY name_assignment
  ABSTRACT SUPERTYPE;
    assigned_name : label;
  DERIVE
    role : object_role := get_role(SELF);
  WHERE
    wr1: (SIZEOF(USEDIN(SELF,'PLANT_SPATIAL_CONFIGURATION.' +
           'ROLE_ASSOCIATION.ITEM_WITH_ROLE')) <= 1);
END_ENTITY; -- name_assignment

ENTITY name_attribute;
    attribute_value : label;
    named_item      : name_attribute_select;
END_ENTITY; -- name_attribute

ENTITY named_unit
  SUPERTYPE OF (ONEOF (si_unit,conversion_based_unit,
      context_dependent_unit) ANDOR ONEOF (length_unit,mass_unit,
      time_unit,electric_current_unit,thermodynamic_temperature_unit,
      amount_of_substance_unit,luminous_intensity_unit,plane_angle_unit,
      solid_angle_unit,ratio_unit));
    dimensions : dimensional_exponents;
END_ENTITY; -- named_unit

ENTITY object_role;
    name        : label;
    description : OPTIONAL text;
END_ENTITY; -- object_role

ENTITY offset_curve_2d
  SUBTYPE OF (curve);
    basis_curve    : curve;
    distance       : length_measure;
    self_intersect : LOGICAL;
  WHERE
    wr1: (basis_curve.dim = 2);
END_ENTITY; -- offset_curve_2d

ENTITY offset_curve_3d
  SUBTYPE OF (curve);
    basis_curve    : curve;
    distance       : length_measure;
    self_intersect : LOGICAL;
    ref_direction  : direction;
  WHERE
    wr1: ((basis_curve.dim = 3) AND (ref_direction.dim = 3));
END_ENTITY; -- offset_curve_3d

ENTITY offset_surface
  SUBTYPE OF (surface);
    basis_surface  : surface;
```

© ISO 2001 — All rights reserved

```
    distance       : length_measure;
    self_intersect : LOGICAL;
END_ENTITY; -- offset_surface

ENTITY open_shell
  SUBTYPE OF (connected_face_set);
END_ENTITY; -- open_shell

ENTITY organization;
    id          : OPTIONAL identifier;
    name        : label;
    description : OPTIONAL text;
END_ENTITY; -- organization

ENTITY organization_assignment
  ABSTRACT SUPERTYPE;
    assigned_organization : organization;
    role                  : organization_role;
END_ENTITY; -- organization_assignment

ENTITY organization_role;
    name : label;
  DERIVE
    description : text := get_description_value(SELF);
  WHERE
    wr1: (SIZEOF(USEDIN(SELF,'PLANT_SPATIAL_CONFIGURATION.' +
          'DESCRIPTION_ATTRIBUTE.DESCRIBED_ITEM')) <= 1);
END_ENTITY; -- organization_role

ENTITY organizational_project;
    name                    : label;
    description               : OPTIONAL text;
    responsible_organizations : SET [1:?] OF organization;
  DERIVE
    id : identifier := get_id_value(SELF);
  WHERE
    wr1: (SIZEOF(USEDIN(SELF,'PLANT_SPATIAL_CONFIGURATION.' +
          'ID_ATTRIBUTE.IDENTIFIED_ITEM')) <= 1);
END_ENTITY; -- organizational_project

ENTITY oriented_closed_shell
  SUBTYPE OF (closed_shell);
    closed_shell_element : closed_shell;
    orientation          : BOOLEAN;
  DERIVE
    SELF\connected_face_set.cfs_faces : SET [1:?] OF face :=
                                  conditional_reverse(SELF.
                                  orientation,SELF.
                                  closed_shell_element.cfs_faces);
  WHERE
    wr1: (NOT ('PLANT_SPATIAL_CONFIGURATION.ORIENTED_CLOSED_SHELL' IN
```

 © ISO 2001 — All rights reserved

```
        TYPEOF(SELF.closed_shell_element)));
  END_ENTITY; -- oriented_closed_shell

  ENTITY oriented_edge
    SUBTYPE OF (edge);
      edge_element : edge;
      orientation  : BOOLEAN;
    DERIVE
      SELF\edge.edge_start : vertex := boolean_choose(SELF.orientation,
                             SELF.edge_element.edge_start,SELF.
                             edge_element.edge_end);
      SELF\edge.edge_end   : vertex := boolean_choose(SELF.orientation,
                             SELF.edge_element.edge_end,SELF.
                             edge_element.edge_start);
    WHERE
      wr1: (NOT ('PLANT_SPATIAL_CONFIGURATION.ORIENTED_EDGE' IN
TYPEOF(SELF.
            edge_element)));
  END_ENTITY; -- oriented_edge

  ENTITY oriented_face
    SUBTYPE OF (face);
      face_element : face;
      orientation  : BOOLEAN;
    DERIVE
      SELF\face.bounds : SET [1:?] OF face_bound := conditional_reverse(
                         SELF.orientation,SELF.face_element.bounds);
    WHERE
      wr1: (NOT ('PLANT_SPATIAL_CONFIGURATION.ORIENTED_FACE' IN
TYPEOF(SELF.
            face_element)));
  END_ENTITY; -- oriented_face

  ENTITY oriented_open_shell
    SUBTYPE OF (open_shell);
      open_shell_element : open_shell;
      orientation        : BOOLEAN;
    DERIVE
      SELF\connected_face_set.cfs_faces : SET [1:?] OF face :=
                                  conditional_reverse(SELF.
                                  orientation,SELF.
                                  open_shell_element.cfs_faces);
    WHERE
      wr1: (NOT ('PLANT_SPATIAL_CONFIGURATION.ORIENTED_OPEN_SHELL' IN
        TYPEOF(SELF.open_shell_element)));
  END_ENTITY; -- oriented_open_shell

  ENTITY oriented_path
    SUBTYPE OF (path);
      path_element : path;
      orientation  : BOOLEAN;
    DERIVE
      SELF\path.edge_list : LIST [1:?] OF oriented_edge :=
                        conditional_reverse(SELF.orientation,SELF.
```

© ISO 2001 — All rights reserved

```
                        path_element.edge_list);
   WHERE
     wr1: (NOT ('PLANT_SPATIAL_CONFIGURATION.ORIENTED_PATH' IN
TYPEOF(SELF.
            path_element)));
 END_ENTITY; -- oriented_path

 ENTITY outer_boundary_curve
   SUBTYPE OF (boundary_curve);
 END_ENTITY; -- outer_boundary_curve

 ENTITY parabola
   SUBTYPE OF (conic);
     focal_dist : length_measure;
   WHERE
     wr1: (focal_dist <> 0);
 END_ENTITY; -- parabola

 ENTITY parametric_representation_context
   SUBTYPE OF (representation_context);
 END_ENTITY; -- parametric_representation_context

 ENTITY path
   SUPERTYPE OF (ONEOF (edge_loop,oriented_path))
   SUBTYPE OF (topological_representation_item);
     edge_list : LIST [1:?] OF oriented_edge;
   WHERE
     wr1: path_head_to_tail(SELF);
 END_ENTITY; -- path

 ENTITY pcurve
   SUBTYPE OF (curve);
     basis_surface      : surface;
     reference_to_curve : definitional_representation;
   WHERE
     wr1: (SIZEOF(reference_to_curve\representation.items) = 1);
     wr2: ('PLANT_SPATIAL_CONFIGURATION.CURVE' IN TYPEOF(reference_to_curve\
            representation.items[1]));
     wr3: (reference_to_curve\representation.items[1]\
            geometric_representation_item.dim = 2);
 END_ENTITY; -- pcurve

 ENTITY person;
     id           : identifier;
     last_name     : OPTIONAL label;
     first_name    : OPTIONAL label;
     middle_names  : OPTIONAL LIST [1:?] OF label;
     prefix_titles : OPTIONAL LIST [1:?] OF label;
     suffix_titles : OPTIONAL LIST [1:?] OF label;
   WHERE
     wr1: (EXISTS(last_name) OR EXISTS(first_name));
```

 © ISO 2001 — All rights reserved

```
END_ENTITY; -- person

ENTITY person_and_organization;
   the_person       : person;
   the_organization : organization;
  DERIVE
   name       : label := get_name_value(SELF);
   description : text := get_description_value(SELF);
  WHERE
   wr1: (SIZEOF(USEDIN(SELF,'PLANT_SPATIAL_CONFIGURATION.' +
          'NAME_ATTRIBUTE.NAMED_ITEM')) <= 1);
   wr2: (SIZEOF(USEDIN(SELF,'PLANT_SPATIAL_CONFIGURATION.' +
          'DESCRIPTION_ATTRIBUTE.DESCRIBED_ITEM')) <= 1);
END_ENTITY; -- person_and_organization

ENTITY person_and_organization_assignment
  ABSTRACT SUPERTYPE;
   assigned_person_and_organization : person_and_organization;
   role                             : person_and_organization_role;
END_ENTITY; -- person_and_organization_assignment

ENTITY person_and_organization_role;
   name : label;
  DERIVE
   description : text := get_description_value(SELF);
  WHERE
   wr1: (SIZEOF(USEDIN(SELF,'PLANT_SPATIAL_CONFIGURATION.' +
          'DESCRIPTION_ATTRIBUTE.DESCRIBED_ITEM')) <= 1);
END_ENTITY; -- person_and_organization_role

ENTITY person_assignment
  ABSTRACT SUPERTYPE;
   assigned_person : person;
   role            : person_role;
END_ENTITY; -- person_assignment

ENTITY person_role;
   name : label;
  DERIVE
   description : text := get_description_value(SELF);
  WHERE
   wr1: (SIZEOF(USEDIN(SELF,'PLANT_SPATIAL_CONFIGURATION.' +
          'DESCRIPTION_ATTRIBUTE.DESCRIBED_ITEM')) <= 1);
END_ENTITY; -- person_role

ENTITY pipe_class
  SUBTYPE OF (group);
  WHERE
   wr1: (SIZEOF(QUERY ( aca <* QUERY ( ca <* USEDIN(SELF,
          'PLANT_SPATIAL_CONFIGURATION.CLASSIFICATION_ASSIGNMENT.' +
          'ASSIGNED_CLASS') |

('PLANT_SPATIAL_CONFIGURATION.APPLIED_CLASSIFICATION_ASSIGNMENT'
          IN TYPEOF(ca)) ) | (NOT (SIZEOF(QUERY ( it <* aca.items | (
```

© ISO 2001 — All rights reserved

```
            NOT (
            'PLANT_SPATIAL_CONFIGURATION.PIPING_COMPONENT_DEFINITION' IN
             TYPEOF(it))) )) = 0)) )) = 0);
     wr2: (SIZEOF(QUERY ( aca <* QUERY ( ca <* USEDIN(SELF,
            'PLANT_SPATIAL_CONFIGURATION.CLASSIFICATION_ASSIGNMENT.' +
            'ASSIGNED_CLASS') |

('PLANT_SPATIAL_CONFIGURATION.APPLIED_CLASSIFICATION_ASSIGNMENT'
            IN TYPEOF(ca)) ) | (NOT (SIZEOF(QUERY ( pcd <*
            QUERY ( it <* aca.items | (
            'PLANT_SPATIAL_CONFIGURATION.PIPING_COMPONENT_DEFINITION' IN
             TYPEOF(it)) ) | (NOT (SIZEOF(QUERY ( aca1 <* USEDIN(pcd.
            formation.of_product,'PLANT_SPATIAL_CONFIGURATION.' +
            'APPLIED_CLASSIFICATION_ASSIGNMENT.ITEMS') | class_in_tree(
            aca1.assigned_class,'pipe') )) = 1)) )) = 0)) )) = 0);
  END_ENTITY; -- pipe_class

  ENTITY pipe_closure_fitting_class
    SUBTYPE OF (group);
    WHERE
     wr1: (SIZEOF(QUERY ( aca <* QUERY ( ca <* USEDIN(SELF,
            'PLANT_SPATIAL_CONFIGURATION.CLASSIFICATION_ASSIGNMENT.' +
            'ASSIGNED_CLASS') |

('PLANT_SPATIAL_CONFIGURATION.APPLIED_CLASSIFICATION_ASSIGNMENT'
            IN TYPEOF(ca)) ) | (NOT (SIZEOF(QUERY ( it <* aca.items | (
            NOT (
            'PLANT_SPATIAL_CONFIGURATION.PIPING_COMPONENT_DEFINITION' IN
             TYPEOF(it))) )) = 0)) )) = 0);
     wr2: (SIZEOF(QUERY ( aca <* QUERY ( ca <* USEDIN(SELF,
            'PLANT_SPATIAL_CONFIGURATION.CLASSIFICATION_ASSIGNMENT.' +
            'ASSIGNED_CLASS') |

('PLANT_SPATIAL_CONFIGURATION.APPLIED_CLASSIFICATION_ASSIGNMENT'
            IN TYPEOF(ca)) ) | (NOT (SIZEOF(QUERY ( pcd <*
            QUERY ( it <* aca.items | (
            'PLANT_SPATIAL_CONFIGURATION.PIPING_COMPONENT_DEFINITION' IN
            TYPEOF(it)) ) | (NOT (SIZEOF(QUERY ( aca1 <* USEDIN(pcd.
            formation.of_product,'PLANT_SPATIAL_CONFIGURATION.' +
            'APPLIED_CLASSIFICATION_ASSIGNMENT.ITEMS') | class_in_tree(
            aca1.assigned_class,'pipe closure') )) = 1)) )) = 0)) )) = 0);
  END_ENTITY; -- pipe_closure_fitting_class

  ENTITY piping_component_class
    SUBTYPE OF (group, characterized_object);
  END_ENTITY; -- piping_component_class

  ENTITY piping_component_definition
    SUBTYPE OF (product_definition);
  END_ENTITY; -- piping_component_definition
```

 © ISO 2001 — All rights reserved

```
ENTITY piping_connector_class
  SUBTYPE OF (group);
END_ENTITY; -- piping_connector_class

ENTITY piping_spool_definition
  SUBTYPE OF (product_definition);
  WHERE
    wr1: (SIZEOF(USEDIN(SELF,'PLANT_SPATIAL_CONFIGURATION.' +
'PRODUCT_DEFINITION_RELATIONSHIP.RELATING_PRODUCT_DEFINITION'))
          > 1);
END_ENTITY; -- piping_spool_definition

ENTITY piping_support_definition
  SUBTYPE OF (product_definition);
END_ENTITY; -- piping_support_definition

ENTITY piping_support_fitting_class
  SUBTYPE OF (group);
  WHERE
    wr1: (SIZEOF(QUERY ( aca <* QUERY ( ca <* USEDIN(SELF,
          'PLANT_SPATIAL_CONFIGURATION.CLASSIFICATION_ASSIGNMENT.' +
          'ASSIGNED_CLASS') |

('PLANT_SPATIAL_CONFIGURATION.APPLIED_CLASSIFICATION_ASSIGNMENT'
          IN TYPEOF(ca)) ) | (NOT (SIZEOF(QUERY ( it <* aca.items | (
          NOT ('PLANT_SPATIAL_CONFIGURATION.PIPING_SUPPORT_DEFINITION'
          IN TYPEOF(it))) )) = 0)) )) = 0);
    wr2: (SIZEOF(QUERY ( aca <* QUERY ( ca <* USEDIN(SELF,
          'PLANT_SPATIAL_CONFIGURATION.CLASSIFICATION_ASSIGNMENT.' +
          'ASSIGNED_CLASS') |

('PLANT_SPATIAL_CONFIGURATION.APPLIED_CLASSIFICATION_ASSIGNMENT'
          IN TYPEOF(ca)) ) | (NOT (SIZEOF(QUERY ( pcd <*
          QUERY ( it <* aca.items | (
          'PLANT_SPATIAL_CONFIGURATION.PIPING_COMPONENT_DEFINITION' IN
           TYPEOF(it)) ) | (NOT (SIZEOF(QUERY ( aca1 <* USEDIN(pcd.
          formation.of_product,'PLANT_SPATIAL_CONFIGURATION.' +
          'APPLIED_CLASSIFICATION_ASSIGNMENT.ITEMS') | class_in_tree(
          aca1.assigned_class,'piping support') )) = 1)) )) = 0)) )) =
           0);
END_ENTITY; -- piping_support_fitting_class

ENTITY piping_system
  SUBTYPE OF (product_definition);
  WHERE
    wr1: (SIZEOF(QUERY ( pdr <* USEDIN(SELF,
          'PLANT_SPATIAL_CONFIGURATION.' +
          'PRODUCT_DEFINITION_RELATIONSHIP.RELATED_PRODUCT_DEFINITION')
          | (('PLANT_SPATIAL_CONFIGURATION.PLANT' IN TYPEOF(pdr.
          relating_product_definition.formation.of_product)) AND (pdr.
          relating_product_definition.frame_of_reference.name =
          'functional occurrence')) )) = 1);
END_ENTITY; -- piping_system
```

© ISO 2001 — All rights reserved

```
  ENTITY placement
    SUPERTYPE OF (ONEOF (axis1_placement,axis2_placement_2d,
       axis2_placement_3d))
    SUBTYPE OF (geometric_representation_item);
      location : cartesian_point;
  END_ENTITY; -- placement

  ENTITY plane
    SUBTYPE OF (elementary_surface);
  END_ENTITY; -- plane

  ENTITY plane_angle_measure_with_unit
    SUBTYPE OF (measure_with_unit);
    WHERE
      wr1: ('PLANT_SPATIAL_CONFIGURATION.PLANE_ANGLE_UNIT' IN
TYPEOF(SELF\
            measure_with_unit.unit_component));
  END_ENTITY; -- plane_angle_measure_with_unit

  ENTITY plane_angle_unit
    SUBTYPE OF (named_unit);
    WHERE
      wr1: ((SELF\named_unit.dimensions.length_exponent = 0) AND (SELF\
            named_unit.dimensions.mass_exponent = 0) AND (SELF\
            named_unit.dimensions.time_exponent = 0) AND (SELF\
            named_unit.dimensions.electric_current_exponent = 0) AND (
            SELF\named_unit.dimensions.
            thermodynamic_temperature_exponent = 0) AND (SELF\named_unit
            .dimensions.amount_of_substance_exponent = 0) AND (SELF\
            named_unit.dimensions.luminous_intensity_exponent = 0));
  END_ENTITY; -- plane_angle_unit

  ENTITY plant
    SUBTYPE OF (product);
    WHERE
      wr1: ((SIZEOF(QUERY ( pscoa <* USEDIN(SELF,
            'PLANT_SPATIAL_CONFIGURATION.' +

'PLANT_SPATIAL_CONFIGURATION_ORGANIZATION_ASSIGNMENT.ITEMS')
             | (pscoa.role.name = 'plant operator') )) + SIZEOF(
            QUERY ( pscpaoa <* USEDIN(SELF,
            'PLANT_SPATIAL_CONFIGURATION.' +

'PLANT_SPATIAL_CONFIGURATION_PERSON_AND_ORGANIZATION_ASSIGNMENT.'
            + 'ITEMS') | (pscpaoa.role.name = 'plant operator') ))) <= 1);
      wr2: ((SIZEOF(QUERY ( pscoa <* USEDIN(SELF,
            'PLANT_SPATIAL_CONFIGURATION.' +

'PLANT_SPATIAL_CONFIGURATION_ORGANIZATION_ASSIGNMENT.ITEMS')
             | (pscoa.role.name = 'plant owner') )) + SIZEOF(
            QUERY ( pscpaoa <* USEDIN(SELF,
```

 © ISO 2001 — All rights reserved

```
            'PLANT_SPATIAL_CONFIGURATION.' +

'PLANT_SPATIAL_CONFIGURATION_PERSON_AND_ORGANIZATION_ASSIGNMENT.'
            + 'ITEMS') | (pscpaoa.role.name = 'plant owner') )) +
            SIZEOF(QUERY ( pscpa <* USEDIN(SELF,
            'PLANT_SPATIAL_CONFIGURATION.' +
            'PLANT_SPATIAL_CONFIGURATION_PERSON_ASSIGNMENT.ITEMS') | (
            pscpa.role.name = 'plant owner') ))) >= 1);
     wr3: ((SIZEOF(QUERY ( pscoa <* USEDIN(SELF,
            'PLANT_SPATIAL_CONFIGURATION.' +

'PLANT_SPATIAL_CONFIGURATION_ORGANIZATION_ASSIGNMENT.ITEMS')
             | (pscoa\organization_assignment.role.name =
            'plant project owner') )) + SIZEOF(QUERY ( pscpaoa <*
            USEDIN(SELF,'PLANT_SPATIAL_CONFIGURATION.' +

'PLANT_SPATIAL_CONFIGURATION_PERSON_AND_ORGANIZATION_ASSIGNMENT.'
            + 'ITEMS') | (pscpaoa\person_and_organization_assignment.
            role.name = 'plant project owner') ))) >= 1);
     wr4: (SIZEOF(QUERY ( pdf <* USEDIN(SELF,
            'PLANT_SPATIAL_CONFIGURATION.' +
            'PRODUCT_DEFINITION_FORMATION.OF_PRODUCT') | (NOT (SIZEOF(
            QUERY ( pd <* USEDIN(pdf,
            'PLANT_SPATIAL_CONFIGURATION.PRODUCT_DEFINITION.FORMATION')
             | (pd.frame_of_reference.name = 'functional occurrence') ))
            <= 1)) )) = 0);
  END_ENTITY; -- plant

ENTITY plant_csg_shape_representation
  SUBTYPE OF (shape_representation);
WHERE
  WR1: SIZEOF (QUERY (item <* SELF.items |
      NOT (SIZEOF (['PLANT_SPATIAL_CONFIGURATION.CSG_SOLID',
      'PLANT_SPATIAL_CONFIGURATION.AXIS2_PLACEMENT_3D',
      'PLANT_SPATIAL_CONFIGURATION.MAPPED_ITEM'] * TYPEOF (item)) = 1)))
      = 0;
  WR2: SIZEOF (QUERY (item <* SELF.items |
      SIZEOF (['PLANT_SPATIAL_CONFIGURATION.CSG_SOLID',
      'PLANT_SPATIAL_CONFIGURATION.MAPPED_ITEM'] * TYPEOF (item))
      = 1)) >= 1;
  WR3: SIZEOF (QUERY (item <* SELF.items |
      ('PLANT_SPATIAL_CONFIGURATION.CSG_SOLID' IN TYPEOF (item)) AND
      (NOT (valid_advanced_csg_tree
            (item\csg_solid.tree_root_expression))))) = 0;
  WR4: SIZEOF (QUERY (mi <* QUERY (item <* SELF.items |
      'PLANT_SPATIAL_CONFIGURATION.MAPPED_ITEM' IN TYPEOF (item)) |
      NOT ('PLANT_SPATIAL_CONFIGURATION.' +
      'PLANT_CSG_SHAPE_REPRESENTATION' IN
      TYPEOF (mi\mapped_item.mapping_source.mapped_representation)))) = 0;
END_ENTITY; -- plant_csg_shape_representation

  ENTITY plant_design_csg_primitive
    SUBTYPE OF (shape_representation, solid_model);
    WHERE
```

© ISO 2001 — All rights reserved

```
wr1 : (SELF.context_of_items.coordinate_space_dimension = 3);
wr2 : (SELF\representation.name = SELF\representation_item.name);
wr3 : (SELF\representation.name IN ['hemisphere',
        'rectangle to ellipse','trimmed sphere','trimmed pyramid']);
wr4 : ((NOT (SELF\representation.name = 'hemisphere')) OR (SIZEOF(
        SELF.items) = 2));
wr5 : ((NOT (SELF\representation.name = 'hemisphere')) OR (SIZEOF(
        QUERY ( it <* SELF.items | ((it.name = 'position') AND (
        'PLANT_SPATIAL_CONFIGURATION.AXIS2_PLACEMENT_3D' IN TYPEOF(
        it))) )) = 1));
wr6 : ((NOT (SELF\representation.name = 'hemisphere')) OR (SIZEOF(
        QUERY ( it <* SELF.items | ((it.name = 'radius') AND (
        SIZEOF([
        'PLANT_SPATIAL_CONFIGURATION.MEASURE_REPRESENTATION_ITEM',
        'PLANT_SPATIAL_CONFIGURATION.LENGTH_MEASURE_WITH_UNIT'] *
        TYPEOF(it)) = 2)) )) = 1));
wr7 : ((NOT (SELF\representation.name = 'rectangle to ellipse')) OR
        (SIZEOF(SELF.items) = 8));
wr8 : ((NOT (SELF\representation.name = 'rectangle to ellipse')) OR
        (SIZEOF(QUERY ( it <* SELF.items | ((it.name = 'position')
        AND ('PLANT_SPATIAL_CONFIGURATION.AXIS2_PLACEMENT_3D' IN
        TYPEOF(it))) )) = 1));
wr9 : ((NOT (SELF\representation.name = 'rectangle to ellipse')) OR
        (SIZEOF(QUERY ( it <* SELF.items | ((it.name = 'x size')
        AND (SIZEOF([
        'PLANT_SPATIAL_CONFIGURATION.MEASURE_REPRESENTATION_ITEM',
        'PLANT_SPATIAL_CONFIGURATION.LENGTH_MEASURE_WITH_UNIT'] *
        TYPEOF(it)) = 2) AND (
        'PLANT_SPATIAL_CONFIGURATION.POSITIVE_LENGTH_MEASURE' IN
        TYPEOF(it\measure_with_unit.value_component))) )) = 1));
wr10: ((NOT (SELF\representation.name = 'rectangle to ellipse')) OR
        (SIZEOF(QUERY ( it <* SELF.items | ((it.name = 'y size')
        AND (SIZEOF([
        'PLANT_SPATIAL_CONFIGURATION.MEASURE_REPRESENTATION_ITEM',
        'PLANT_SPATIAL_CONFIGURATION.LENGTH_MEASURE_WITH_UNIT'] *
        TYPEOF(it)) = 2) AND (
        'PLANT_SPATIAL_CONFIGURATION.POSITIVE_LENGTH_MEASURE' IN
        TYPEOF(it\measure_with_unit.value_component))) )) = 1));
wr11: ((NOT (SELF\representation.name = 'rectangle to ellipse')) OR
        (SIZEOF(QUERY ( it <* SELF.items | ((it.name = 'height')
        AND (SIZEOF([
        'PLANT_SPATIAL_CONFIGURATION.MEASURE_REPRESENTATION_ITEM',
        'PLANT_SPATIAL_CONFIGURATION.LENGTH_MEASURE_WITH_UNIT'] *
        TYPEOF(it)) = 2) AND (
        'PLANT_SPATIAL_CONFIGURATION.POSITIVE_LENGTH_MEASURE' IN
        TYPEOF(it\measure_with_unit.value_component))) )) = 1));
wr12: ((NOT (SELF\representation.name = 'rectangle to ellipse')) OR
        (SIZEOF(QUERY ( it <* SELF.items | ((it.name = 'x offset')
        AND (SIZEOF([
        'PLANT_SPATIAL_CONFIGURATION.MEASURE_REPRESENTATION_ITEM',
        'PLANT_SPATIAL_CONFIGURATION.LENGTH_MEASURE_WITH_UNIT'] *
```

 © ISO 2001 — All rights reserved

```
        TYPEOF(it)) = 2)) )) = 1));
wr13: ((NOT (SELF\representation.name = 'rectangle to ellipse')) OR
        (SIZEOF(QUERY ( it <* SELF.items | ((it.name = 'y offset')
        AND (SIZEOF([
        'PLANT_SPATIAL_CONFIGURATION.MEASURE_REPRESENTATION_ITEM',
        'PLANT_SPATIAL_CONFIGURATION.LENGTH_MEASURE_WITH_UNIT'] *
        TYPEOF(it)) = 2)) )) = 1));
wr14: ((NOT (SELF\representation.name = 'rectangle to ellipse')) OR
        (SIZEOF(QUERY ( it <* SELF.items | ((it.name =
        'semi axis 1') AND (SIZEOF([
        'PLANT_SPATIAL_CONFIGURATION.MEASURE_REPRESENTATION_ITEM',
        'PLANT_SPATIAL_CONFIGURATION.LENGTH_MEASURE_WITH_UNIT'] *
        TYPEOF(it)) = 2)) )) = 1));
wr15: ((NOT (SELF\representation.name = 'rectangle to ellipse')) OR
        (SIZEOF(QUERY ( it <* SELF.items | ((it.name =
        'semi axis 2') AND (SIZEOF([
        'PLANT_SPATIAL_CONFIGURATION.MEASURE_REPRESENTATION_ITEM',
        'PLANT_SPATIAL_CONFIGURATION.LENGTH_MEASURE_WITH_UNIT'] *
        TYPEOF(it)) = 2)) )) = 1));
wr16: ((NOT (SELF\representation.name = 'trimmed sphere')) OR (
        SIZEOF(SELF.items) = 3));
wr17: ((NOT (SELF\representation.name = 'trimmed sphere')) OR (
        SIZEOF(QUERY ( it <* SELF.items | ((it.name = 'base sphere')
        AND ('PLANT_SPATIAL_CONFIGURATION.SPHERE' IN TYPEOF(it))) ))
        = 1));
wr18: ((NOT (SELF\representation.name = 'trimmed sphere')) OR (
        SIZEOF(QUERY ( it <* SELF.items | ((it.name =
        'cutting plane normal direction') AND (
        'PLANT_SPATIAL_CONFIGURATION.DIRECTION' IN TYPEOF(it))) ))
        = 1));
wr19: ((NOT (SELF\representation.name = 'trimmed sphere')) OR (
        SIZEOF(QUERY ( it <* SELF.items | ((it.name = 'height') AND
         (SIZEOF([
        'PLANT_SPATIAL_CONFIGURATION.MEASURE_REPRESENTATION_ITEM',
        'PLANT_SPATIAL_CONFIGURATION.LENGTH_MEASURE_WITH_UNIT'] *
        TYPEOF(it)) = 2)) )) = 1));
wr20: ((NOT (SELF\representation.name = 'trimmed sphere')) OR (
        SIZEOF(QUERY ( ht <* QUERY ( it <* SELF.items | ((it.name =
         'height') AND (SIZEOF([
        'PLANT_SPATIAL_CONFIGURATION.MEASURE_REPRESENTATION_ITEM',
        'PLANT_SPATIAL_CONFIGURATION.LENGTH_MEASURE_WITH_UNIT'] *
        TYPEOF(it)) = 2)) ) | (NOT (SIZEOF(QUERY ( sphre <*
        QUERY ( it <* SELF.items | ((it.name = 'base sphere') AND (
        'PLANT_SPATIAL_CONFIGURATION.SPHERE' IN TYPEOF(it))) ) | (
        NOT (((-sphre.radius) < ht.value_component) AND (ht.
        value_component < sphre.radius))) )) = 0)) )) = 0));
wr21: ((NOT (SELF\representation.name = 'trimmed pyramid')) OR (
        SIZEOF(SELF.items) = 8));
wr22: ((NOT (SELF\representation.name = 'trimmed pyramid')) OR (
        SIZEOF(QUERY ( it <* SELF.items | ((it.name =
        'base position') AND (
        'PLANT_SPATIAL_CONFIGURATION.AXIS2_PLACEMENT_3D' IN TYPEOF(
        it))) )) = 1));
wr23: ((NOT (SELF\representation.name = 'trimmed pyramid')) OR (
```

© ISO 2001 — All rights reserved

```
            SIZEOF(QUERY ( it <* SELF.items | ((it.name = 'base length')
            AND (SIZEOF([
            'PLANT_SPATIAL_CONFIGURATION.MEASURE_REPRESENTATION_ITEM',
            'PLANT_SPATIAL_CONFIGURATION.LENGTH_MEASURE_WITH_UNIT'] *
            TYPEOF(it)) = 2)) )) = 1));
    wr24: ((NOT (SELF\representation.name = 'trimmed pyramid')) OR (
            SIZEOF(QUERY ( it <* SELF.items | ((it.name = 'base width')
            AND (SIZEOF([
            'PLANT_SPATIAL_CONFIGURATION.MEASURE_REPRESENTATION_ITEM',
            'PLANT_SPATIAL_CONFIGURATION.LENGTH_MEASURE_WITH_UNIT'] *
            TYPEOF(it)) = 2)) )) = 1));
    wr25: ((NOT (SELF\representation.name = 'trimmed pyramid')) OR (
            SIZEOF(QUERY ( it <* SELF.items | ((it.name = 'height') AND
             (SIZEOF([
            'PLANT_SPATIAL_CONFIGURATION.MEASURE_REPRESENTATION_ITEM',
            'PLANT_SPATIAL_CONFIGURATION.LENGTH_MEASURE_WITH_UNIT'] *
            TYPEOF(it)) = 2)) )) = 1));
    wr26: ((NOT (SELF\representation.name = 'trimmed pyramid')) OR (
            SIZEOF(QUERY ( it <* SELF.items | ((it.name =
            'top centre x') AND (SIZEOF([
            'PLANT_SPATIAL_CONFIGURATION.MEASURE_REPRESENTATION_ITEM',
            'PLANT_SPATIAL_CONFIGURATION.LENGTH_MEASURE_WITH_UNIT'] *
            TYPEOF(it)) = 2)) )) = 1));
    wr27: ((NOT (SELF\representation.name = 'trimmed pyramid')) OR (
            SIZEOF(QUERY ( it <* SELF.items | ((it.name =
            'top centre y') AND (SIZEOF([
            'PLANT_SPATIAL_CONFIGURATION.MEASURE_REPRESENTATION_ITEM',
            'PLANT_SPATIAL_CONFIGURATION.LENGTH_MEASURE_WITH_UNIT'] *
            TYPEOF(it)) = 2)) )) = 1));
    wr28: ((NOT (SELF\representation.name = 'trimmed pyramid')) OR (
            SIZEOF(QUERY ( it <* SELF.items | ((it.name = 'top length')
            AND (SIZEOF([
            'PLANT_SPATIAL_CONFIGURATION.MEASURE_REPRESENTATION_ITEM',
            'PLANT_SPATIAL_CONFIGURATION.LENGTH_MEASURE_WITH_UNIT'] *
            TYPEOF(it)) = 2)) )) = 1));
    wr29: ((NOT (SELF\representation.name = 'trimmed pyramid')) OR (
            SIZEOF(QUERY ( it <* SELF.items | ((it.name = 'top width')
            AND (SIZEOF([
            'PLANT_SPATIAL_CONFIGURATION.MEASURE_REPRESENTATION_ITEM',
            'PLANT_SPATIAL_CONFIGURATION.LENGTH_MEASURE_WITH_UNIT'] *
            TYPEOF(it)) = 2)) )) = 1));
 END_ENTITY; -- plant_design_csg_primitive

 ENTITY plant_item_connection
   SUBTYPE OF (shape_aspect, shape_aspect_relationship);
   WHERE
    wr1: ('PLANT_SPATIAL_CONFIGURATION.PLANT_ITEM_CONNECTOR' IN
TYPEOF(
           SELF\shape_aspect_relationship.relating_shape_aspect));
    wr2: ('PLANT_SPATIAL_CONFIGURATION.PLANT_ITEM_CONNECTOR' IN
TYPEOF(
```

 © ISO 2001 — All rights reserved

```
        SELF\shape_aspect_relationship.related_shape_aspect));
    wr3: (SELF\shape_aspect.of_shape\property_definition.definition\
        product_definition.frame_of_reference\
        application_context_element.name IN ['functional occurrence',
        'physical occurrence','functional definition',
        'physical definition']);
    wr4: (SELF\shape_aspect_relationship.relating_shape_aspect.of_shape\
        property_definition.definition\product_definition.
        frame_of_reference\application_context_element.name = SELF\
        shape_aspect_relationship.related_shape_aspect.of_shape\
        property_definition.definition\product_definition.
        frame_of_reference\application_context_element.name);
    wr5: (SIZEOF(USEDIN(SELF,'PLANT_SPATIAL_CONFIGURATION.' +
        'APPLIED_CLASSIFICATION_ASSIGNMENT.ITEMS')) >= 1);
    wr6: (SIZEOF(QUERY ( pscca <* USEDIN(SELF,
        'PLANT_SPATIAL_CONFIGURATION.' +
        'APPLIED_CLASSIFICATION_ASSIGNMENT.ITEMS') | (NOT (SIZEOF([
        'PLANT_SPATIAL_CONFIGURATION.CONNECTION_FUNCTIONAL_CLASS',
        'PLANT_SPATIAL_CONFIGURATION.CONNECTION_MOTION_CLASS'] *
        TYPEOF(pscca.assigned_class)) >= 1)) )) = 0);
    wr7: (SIZEOF(QUERY ( pdr <* USEDIN(SELF.of_shape.definition,

'PLANT_SPATIAL_CONFIGURATION.PRODUCT_DEFINITION_RELATIONSHIP.' +
        'RELATED_PRODUCT_DEFINITION') | (pdr.name =
        'support usage connection') )) <= 1);
  END_ENTITY; -- plant_item_connection

  ENTITY plant_item_connector
    SUBTYPE OF (shape_aspect);
    WHERE
      wr1 : (SELF\shape_aspect.of_shape\property_definition.definition\
          product_definition.frame_of_reference\
          application_context_element.name IN [
          'functional definition','physical definition',
          'functional occurrence','physical occurrence']);
      wr2 : (SIZEOF(QUERY ( pic <* (bag_to_set(USEDIN(SELF,
          'PLANT_SPATIAL_CONFIGURATION.' +
          'SHAPE_ASPECT_RELATIONSHIP.RELATED_SHAPE_ASPECT')) +
          bag_to_set(USEDIN(SELF,'PLANT_SPATIAL_CONFIGURATION.' +
          'SHAPE_ASPECT_RELATIONSHIP.RELATING_SHAPE_ASPECT'))) | (
          'PLANT_SPATIAL_CONFIGURATION.PLANT_ITEM_CONNECTION' IN
          TYPEOF(pic)) )) <= 1);
      wr3 : ((NOT (SIZEOF(QUERY ( aca <* USEDIN(SELF,
          'PLANT_SPATIAL_CONFIGURATION.' +
          'APPLIED_CLASSIFICATION_ASSIGNMENT.ITEMS') | (SIZEOF(
          TYPEOF(aca.assigned_class) * [
          'PLANT_SPATIAL_CONFIGURATION.PIPING_CONNECTOR_CLASS',
          'PLANT_SPATIAL_CONFIGURATION.CONNECTOR_END_TYPE_CLASS']) =
          1) )) >= 1)) OR (NOT (SIZEOF(QUERY ( pd <* USEDIN(SELF,
          'PLANT_SPATIAL_CONFIGURATION.PROPERTY_DEFINITION.DEFINITION')
          | (pd.name = 'service characteristics') )) >= 1)) OR (
          SIZEOF(QUERY ( sc <* QUERY ( pd <* USEDIN(SELF,
          'PLANT_SPATIAL_CONFIGURATION.PROPERTY_DEFINITION.DEFINITION')
          | (pd.name = 'service characteristics') ) | (NOT (SIZEOF(
```

© ISO 2001 — All rights reserved

```
        QUERY ( pdr <* USEDIN(sc,'PLANT_SPATIAL_CONFIGURATION.' +
        'PROPERTY_DEFINITION_REPRESENTATION.DEFINITION') | (pdr.
        used_representation.name = 'design service characteristics') ))
        = 1)) )) = 0));
    wr4 : ((NOT (SIZEOF(QUERY ( aca <* USEDIN(SELF,
        'PLANT_SPATIAL_CONFIGURATION.' +
        'APPLIED_CLASSIFICATION_ASSIGNMENT.ITEMS') | (SIZEOF(
        TYPEOF(aca.assigned_class) * [
        'PLANT_SPATIAL_CONFIGURATION.PIPING_CONNECTOR_CLASS',
        'PLANT_SPATIAL_CONFIGURATION.CONNECTOR_END_TYPE_CLASS']) =
        1) )) >= 1)) OR (NOT (SIZEOF(QUERY ( pd <* USEDIN(SELF,
        'PLANT_SPATIAL_CONFIGURATION.PROPERTY_DEFINITION.DEFINITION')
        | (pd.name = 'service characteristics') )) >= 1)) OR (
        SIZEOF(QUERY ( sc <* QUERY ( pd <* USEDIN(SELF,
        'PLANT_SPATIAL_CONFIGURATION.PROPERTY_DEFINITION.DEFINITION')
        | (pd.name = 'service characteristics') ) | (NOT (SIZEOF(
        QUERY ( dsc <* QUERY ( pdr <* USEDIN(sc,
        'PLANT_SPATIAL_CONFIGURATION.' +
        'PROPERTY_DEFINITION_REPRESENTATION.DEFINITION') | (pdr.
        used_representation.name = 'design service characteristics') )
         | (SIZEOF(dsc.used_representation.items) >= 2) )) = 1)) ))
        = 0));
    wr5 : ((NOT (SIZEOF(QUERY ( aca <* USEDIN(SELF,
        'PLANT_SPATIAL_CONFIGURATION.' +
        'APPLIED_CLASSIFICATION_ASSIGNMENT.ITEMS') | (SIZEOF(
        TYPEOF(aca.assigned_class) * [
        'PLANT_SPATIAL_CONFIGURATION.PIPING_CONNECTOR_CLASS',
        'PLANT_SPATIAL_CONFIGURATION.CONNECTOR_END_TYPE_CLASS']) =
        1) )) >= 1)) OR (NOT (SIZEOF(QUERY ( pd <* USEDIN(SELF,
        'PLANT_SPATIAL_CONFIGURATION.PROPERTY_DEFINITION.DEFINITION')
        | (pd.name = 'service characteristics') )) >= 1)) OR (
        SIZEOF(QUERY ( sc <* QUERY ( pd <* USEDIN(SELF,
        'PLANT_SPATIAL_CONFIGURATION.PROPERTY_DEFINITION.DEFINITION')
        | (pd.name = 'service characteristics') ) | (NOT (SIZEOF(
        QUERY ( dsc <* QUERY ( pdr <* USEDIN(sc,
        'PLANT_SPATIAL_CONFIGURATION.' +
        'PROPERTY_DEFINITION_REPRESENTATION.DEFINITION') | (pdr.
        used_representation.name = 'design service characteristics') )
         | ((1 <= SIZEOF(QUERY ( it <* dsc.used_representation.
        items | ((
        'PLANT_SPATIAL_CONFIGURATION.MEASURE_REPRESENTATION_ITEM'
        IN TYPEOF(it)) AND (it.name IN ['pressure',
        'minimum pressure','maximum pressure'])) ))) AND (SIZEOF(
        QUERY ( it <* dsc.used_representation.items | ((
        'PLANT_SPATIAL_CONFIGURATION.MEASURE_REPRESENTATION_ITEM'
        IN TYPEOF(it)) AND (it.name IN ['pressure',
        'minimum pressure','maximum pressure'])) )) <= 2)) )) = 1)) ))
        = 0));
    wr6 : ((NOT (SIZEOF(QUERY ( aca <* USEDIN(SELF,
        'PLANT_SPATIAL_CONFIGURATION.' +
        'APPLIED_CLASSIFICATION_ASSIGNMENT.ITEMS') | (SIZEOF(
```

 © ISO 2001 — All rights reserved

```
        TYPEOF(aca.assigned_class) * [
        'PLANT_SPATIAL_CONFIGURATION.PIPING_CONNECTOR_CLASS',
        'PLANT_SPATIAL_CONFIGURATION.CONNECTOR_END_TYPE_CLASS']) =
1) )) >= 1)) OR (NOT (SIZEOF(QUERY ( pd <* USEDIN(SELF,
'PLANT_SPATIAL_CONFIGURATION.PROPERTY_DEFINITION.DEFINITION')
        | (pd.name = 'service characteristics') )) >= 1)) OR (
        SIZEOF(QUERY ( sc <* QUERY ( pd <* USEDIN(SELF,
        'PLANT_SPATIAL_CONFIGURATION.PROPERTY_DEFINITION.DEFINITION')
        | (pd.name = 'service characteristics') ) | (NOT (SIZEOF(
        QUERY ( dsc <* QUERY ( pdr <* USEDIN(sc,
        'PLANT_SPATIAL_CONFIGURATION.' +
        'PROPERTY_DEFINITION_REPRESENTATION.DEFINITION') | (pdr.
        used_representation.name = 'design service characteristics') )
         | (SIZEOF(QUERY ( it <* dsc.used_representation.items | ((
        'PLANT_SPATIAL_CONFIGURATION.MEASURE_REPRESENTATION_ITEM'
        IN TYPEOF(it)) AND (it.name = 'pressure')) )) <= 1) )) = 1)) ))
        = 0));
    wr7 : ((NOT (SIZEOF(QUERY ( aca <* USEDIN(SELF,
        'PLANT_SPATIAL_CONFIGURATION.' +
        'APPLIED_CLASSIFICATION_ASSIGNMENT.ITEMS') | (SIZEOF(
        TYPEOF(aca.assigned_class) * [
        'PLANT_SPATIAL_CONFIGURATION.PIPING_CONNECTOR_CLASS',
        'PLANT_SPATIAL_CONFIGURATION.CONNECTOR_END_TYPE_CLASS']) =
1) )) >= 1)) OR (NOT (SIZEOF(QUERY ( pd <* USEDIN(SELF,
        'PLANT_SPATIAL_CONFIGURATION.PROPERTY_DEFINITION.DEFINITION')
        | (pd.name = 'service characteristics') )) >= 1)) OR (
        SIZEOF(QUERY ( sc <* QUERY ( pd <* USEDIN(SELF,
        'PLANT_SPATIAL_CONFIGURATION.PROPERTY_DEFINITION.DEFINITION')
        | (pd.name = 'service characteristics') ) | (NOT (SIZEOF(
        QUERY ( dsc <* QUERY ( pdr <* USEDIN(sc,
        'PLANT_SPATIAL_CONFIGURATION.' +
        'PROPERTY_DEFINITION_REPRESENTATION.DEFINITION') | (pdr.
        used_representation.name = 'design service characteristics') )
         | (SIZEOF(QUERY ( it <* dsc.used_representation.items | ((
        'PLANT_SPATIAL_CONFIGURATION.MEASURE_REPRESENTATION_ITEM'
        IN TYPEOF(it)) AND (it.name = 'minimum pressure')) )) <= 1) ))
        = 1)) )) = 0));
    wr8 : ((NOT (SIZEOF(QUERY ( aca <* USEDIN(SELF,
        'PLANT_SPATIAL_CONFIGURATION.' +
        'APPLIED_CLASSIFICATION_ASSIGNMENT.ITEMS') | (SIZEOF(
        TYPEOF(aca.assigned_class) * [
        'PLANT_SPATIAL_CONFIGURATION.PIPING_CONNECTOR_CLASS',
        'PLANT_SPATIAL_CONFIGURATION.CONNECTOR_END_TYPE_CLASS']) =
        1) )) >= 1)) OR (NOT (SIZEOF(QUERY ( pd <* USEDIN(SELF,
        'PLANT_SPATIAL_CONFIGURATION.PROPERTY_DEFINITION.DEFINITION')
         | (pd.name = 'service characteristics') )) >= 1)) OR (
        SIZEOF(QUERY ( sc <* QUERY ( pd <* USEDIN(SELF,
        'PLANT_SPATIAL_CONFIGURATION.PROPERTY_DEFINITION.DEFINITION')
        | (pd.name = 'service characteristics') ) | (NOT (SIZEOF(
        QUERY ( dsc <* QUERY ( pdr <* USEDIN(sc,
        'PLANT_SPATIAL_CONFIGURATION.' +
        'PROPERTY_DEFINITION_REPRESENTATION.DEFINITION') | (pdr.
        used_representation.name = 'design service characteristics') )
         | (SIZEOF(QUERY ( it <* dsc.used_representation.items | ((
```

© ISO 2001 — All rights reserved

```
        'PLANT_SPATIAL_CONFIGURATION.MEASURE_REPRESENTATION_ITEM'
        IN TYPEOF(it)) AND (it.name = 'maximum pressure')) )) <= 1) ))
        = 1)) )) = 0));
wr9 : ((NOT (SIZEOF(QUERY ( aca <* USEDIN(SELF,
        'PLANT_SPATIAL_CONFIGURATION.' +
        'APPLIED_CLASSIFICATION_ASSIGNMENT.ITEMS') | (SIZEOF(
        TYPEOF(aca.assigned_class) * [
        'PLANT_SPATIAL_CONFIGURATION.PIPING_CONNECTOR_CLASS',
        'PLANT_SPATIAL_CONFIGURATION.CONNECTOR_END_TYPE_CLASS']) =
        1) )) >= 1)) OR (NOT (SIZEOF(QUERY ( pd <* USEDIN(SELF,
        'PLANT_SPATIAL_CONFIGURATION.PROPERTY_DEFINITION.DEFINITION')
        | (pd.name = 'service characteristics') )) >= 1)) OR (
        SIZEOF(QUERY ( sc <* QUERY ( pd <* USEDIN(SELF,
        'PLANT_SPATIAL_CONFIGURATION.PROPERTY_DEFINITION.DEFINITION')
        | (pd.name = 'service characteristics') ) | (NOT (SIZEOF(
        QUERY ( dsc <* QUERY ( pdr <* USEDIN(sc,
        'PLANT_SPATIAL_CONFIGURATION.' +
        'PROPERTY_DEFINITION_REPRESENTATION.DEFINITION') | (pdr.
        used_representation.name = 'design service characteristics') )
         | ((1 <= SIZEOF(QUERY ( it <* dsc.used_representation.
        items | ((SIZEOF(TYPEOF(it) * [
        'PLANT_SPATIAL_CONFIGURATION.MEASURE_REPRESENTATION_ITEM',
        'PLANT_SPATIAL_CONFIGURATION.' +
        'THERMODYNAMIC_TEMPERATURE_MEASURE_WITH_UNIT']) = 2) AND (
        it.name IN ['temperature','minimum temperature',
        'maximum temperature'])) ))) AND (SIZEOF(QUERY ( it <* dsc.
        used_representation.items | ((SIZEOF(TYPEOF(it) * [
        'PLANT_SPATIAL_CONFIGURATION.MEASURE_REPRESENTATION_ITEM',
        'PLANT_SPATIAL_CONFIGURATION.' +
        'THERMODYNAMIC_TEMPERATURE_MEASURE_WITH_UNIT']) = 2) AND (
        it.name IN ['temperature','minimum temperature',
        'maximum temperature'])) )) <= 2)) )) = 1)) )) = 0));
wr10: ((NOT (SIZEOF(QUERY ( aca <* USEDIN(SELF,
        'PLANT_SPATIAL_CONFIGURATION.' +
        'APPLIED_CLASSIFICATION_ASSIGNMENT.ITEMS') | (SIZEOF(
        TYPEOF(aca.assigned_class) * [
        'PLANT_SPATIAL_CONFIGURATION.PIPING_CONNECTOR_CLASS',
        'PLANT_SPATIAL_CONFIGURATION.CONNECTOR_END_TYPE_CLASS']) =
        1) )) >= 1)) OR (NOT (SIZEOF(QUERY ( pd <* USEDIN(SELF,
        'PLANT_SPATIAL_CONFIGURATION.PROPERTY_DEFINITION.DEFINITION')
         | (pd.name = 'service characteristics') )) >= 1)) OR (
        SIZEOF(QUERY ( sc <* QUERY ( pd <* USEDIN(SELF,
        'PLANT_SPATIAL_CONFIGURATION.PROPERTY_DEFINITION.DEFINITION')
         | (pd.name = 'service characteristics') ) | (NOT (SIZEOF(
        QUERY ( dsc <* QUERY ( pdr <* USEDIN(sc,
        'PLANT_SPATIAL_CONFIGURATION.' +
        'PROPERTY_DEFINITION_REPRESENTATION.DEFINITION') | (pdr.
        used_representation.name = 'design service characteristics') )
         | (SIZEOF(QUERY ( it <* dsc.used_representation.items | ((
        SIZEOF(TYPEOF(it) * [
        'PLANT_SPATIAL_CONFIGURATION.MEASURE_REPRESENTATION_ITEM',
```

 © ISO 2001 — All rights reserved

```
        'PLANT_SPATIAL_CONFIGURATION.' +
        'THERMODYNAMIC_TEMPERATURE_MEASURE_WITH_UNIT']) = 2) AND (
        it.name = 'temperature')) )) <= 1) )) = 1)) )) = 0));
wr11: ((NOT (SIZEOF(QUERY ( aca <* USEDIN(SELF,
        'PLANT_SPATIAL_CONFIGURATION.' +
        'APPLIED_CLASSIFICATION_ASSIGNMENT.ITEMS') | (SIZEOF(
        TYPEOF(aca.assigned_class) * [
        'PLANT_SPATIAL_CONFIGURATION.PIPING_CONNECTOR_CLASS',
        'PLANT_SPATIAL_CONFIGURATION.CONNECTOR_END_TYPE_CLASS']) =
        1) )) >= 1)) OR (NOT (SIZEOF(QUERY ( pd <* USEDIN(SELF,
        'PLANT_SPATIAL_CONFIGURATION.PROPERTY_DEFINITION.DEFINITION')
         | (pd.name = 'service characteristics') )) >= 1)) OR (
        SIZEOF(QUERY ( sc <* QUERY ( pd <* USEDIN(SELF,
        'PLANT_SPATIAL_CONFIGURATION.PROPERTY_DEFINITION.DEFINITION')
         | (pd.name = 'service characteristics') ) | (NOT (SIZEOF(
        QUERY ( dsc <* QUERY ( pdr <* USEDIN(sc,
        'PLANT_SPATIAL_CONFIGURATION.' +
        'PROPERTY_DEFINITION_REPRESENTATION.DEFINITION') | (pdr.
        used_representation.name = 'design service characteristics') )
         | (SIZEOF(QUERY ( it <* dsc.used_representation.items | ((
        SIZEOF(TYPEOF(it) * [
        'PLANT_SPATIAL_CONFIGURATION.MEASURE_REPRESENTATION_ITEM',
        'PLANT_SPATIAL_CONFIGURATION.' +
        'THERMODYNAMIC_TEMPERATURE_MEASURE_WITH_UNIT']) = 2) AND (
        it.name = 'minimum temperature')) )) <= 1) )) = 1)) )) = 0));
wr12: ((NOT (SIZEOF(QUERY ( aca <* USEDIN(SELF,
        'PLANT_SPATIAL_CONFIGURATION.' +
        'APPLIED_CLASSIFICATION_ASSIGNMENT.ITEMS') | (SIZEOF(
        TYPEOF(aca.assigned_class) * [
        'PLANT_SPATIAL_CONFIGURATION.PIPING_CONNECTOR_CLASS',
        'PLANT_SPATIAL_CONFIGURATION.CONNECTOR_END_TYPE_CLASS']) =
        1) )) >= 1)) OR (NOT (SIZEOF(QUERY ( pd <* USEDIN(SELF,
        'PLANT_SPATIAL_CONFIGURATION.PROPERTY_DEFINITION.DEFINITION')
         | (pd.name = 'service characteristics') )) >= 1)) OR (
        SIZEOF(QUERY ( sc <* QUERY ( pd <* USEDIN(SELF,
        'PLANT_SPATIAL_CONFIGURATION.PROPERTY_DEFINITION.DEFINITION')
         | (pd.name = 'service characteristics') ) | (NOT (SIZEOF(
        QUERY ( dsc <* QUERY ( pdr <* USEDIN(sc,
        'PLANT_SPATIAL_CONFIGURATION.' +
        'PROPERTY_DEFINITION_REPRESENTATION.DEFINITION') | (pdr.
        used_representation.name = 'design service characteristics') )
         | (SIZEOF(QUERY ( it <* dsc.used_representation.items | ((
        SIZEOF(TYPEOF(it) * [
        'PLANT_SPATIAL_CONFIGURATION.MEASURE_REPRESENTATION_ITEM',
        'PLANT_SPATIAL_CONFIGURATION.' +
        'THERMODYNAMIC_TEMPERATURE_MEASURE_WITH_UNIT']) = 2) AND (
        it.name = 'maximum temperature')) )) <= 1) )) = 1)) )) = 0));
wr13: ((NOT (SELF\shape_aspect.of_shape\property_definition.
        definition\product_definition.frame_of_reference\
        application_context_element.name IN [
        'functional definition','functional occurrence'])) OR (
        SIZEOF(QUERY ( pdr <* USEDIN(SELF,
        'PLANT_SPATIAL_CONFIGURATION.' +
        'PROPERTY_DEFINITION_REPRESENTATION.DEFINITION') | (
```

© ISO 2001 — All rights reserved

```
            'PLANT_SPATIAL_CONFIGURATION.SHAPE_REPRESENTATION' IN
            TYPEOF(pdr.used_representation)) )) = 0));
END_ENTITY; -- plant_item_connector

ENTITY plant_item_interference
  SUBTYPE OF (product_definition_relationship);
END_ENTITY; -- plant_item_interference

ENTITY plant_item_route
  SUBTYPE OF (product_definition_shape);
  WHERE
    wr1: (SELF\property_definition.definition\product_definition.
            frame_of_reference\application_context_element.name =
            'physical occurrence');
    wr2: (SIZEOF(TYPEOF(SELF\property_definition.definition) * [
            'PLANT_SPATIAL_CONFIGURATION.PLANT_LINE_DEFINITION',
            'PLANT_SPATIAL_CONFIGURATION.PLANT_LINE_SEGMENT_DEFINITION'])
            = 1);
END_ENTITY; -- plant_item_route

ENTITY plant_item_weight_representation
  SUBTYPE OF (property_definition_representation);
  WHERE
    wr1: (SELF.used_representation.name = 'item weight');
    wr2: (SIZEOF(SELF.used_representation.items) >= 2);
    wr3: (SIZEOF(QUERY ( it <* SELF.used_representation.items | ((it.
            name IN ['weight value','maximum weight value',
            'minimum weight value']) AND (NOT (SIZEOF(TYPEOF(it) * [
            'PLANT_SPATIAL_CONFIGURATION.MEASURE_REPRESENTATION_ITEM',
            'PLANT_SPATIAL_CONFIGURATION.QUALIFIED_REPRESENTATION_ITEM'])
            = 2))) )) = 0);
    wr4: (SIZEOF(QUERY ( it <* SELF.used_representation.items | ((
            'PLANT_SPATIAL_CONFIGURATION.GEOMETRIC_REPRESENTATION_ITEM'
            IN TYPEOF(it)) AND (it.name = 'centre of gravity')) )) = 1);
    wr5: ((1 <= SIZEOF(QUERY ( it <* SELF.used_representation.items | (
            it.name IN ['weight value','maximum weight value',
            'minimum weight value']) ))) AND (SIZEOF(QUERY ( it <* SELF.
            used_representation.items | (it.name IN ['weight value',
            'maximum weight value','minimum weight value']) )) <= 2));
    wr6: (SIZEOF(QUERY ( it <* SELF\property_definition_representation.
            used_representation.items | ((it.name IN [
            'maximum weight value','minimum weight value']) AND (NOT (
            SIZEOF(QUERY ( tq <* QUERY ( qual <* it\
            qualified_representation_item.qualifiers | (
            'PLANT_SPATIAL_CONFIGURATION.TYPE_QUALIFIER' IN TYPEOF(qual)) )
             | (tq.name = 'operating') )) = 1))) )) = 0);
END_ENTITY; -- plant_item_weight_representation

ENTITY plant_line_definition
  SUBTYPE OF (product_definition_with_associated_documents);
  WHERE
```

 © ISO 2001 — All rights reserved

```
    wr1: (SIZEOF(QUERY ( pdr <* USEDIN(SELF,
          'PLANT_SPATIAL_CONFIGURATION.' +
          'PRODUCT_DEFINITION_RELATIONSHIP.RELATED_PRODUCT_DEFINITION')
           | ('PLANT_SPATIAL_CONFIGURATION.PIPING_SYSTEM' IN TYPEOF(
          pdr.relating_product_definition)) )) = 1);
    wr2: (SIZEOF(QUERY ( pdr <* USEDIN(SELF,
          'PLANT_SPATIAL_CONFIGURATION.' +

'PRODUCT_DEFINITION_RELATIONSHIP.RELATING_PRODUCT_DEFINITION')
           |
('PLANT_SPATIAL_CONFIGURATION.PLANT_LINE_SEGMENT_DEFINITION'
          IN TYPEOF(pdr.related_product_definition)) )) >= 1);
    wr3: ((NOT (SIZEOF(QUERY ( pd <* USEDIN(SELF,
          'PLANT_SPATIAL_CONFIGURATION.PROPERTY_DEFINITION.DEFINITION')
          | (SIZEOF(USEDIN(pd,'PLANT_SPATIAL_CONFIGURATION.' +
          'PROPERTY_DEFINITION_REPRESENTATION.DEFINITION')) >= 1) )) =
          0)) OR (SIZEOF(QUERY ( pd <* USEDIN(SELF,
          'PLANT_SPATIAL_CONFIGURATION.PROPERTY_DEFINITION.DEFINITION')
          | (NOT (SIZEOF(QUERY ( pdr <* USEDIN(pd,
          'PLANT_SPATIAL_CONFIGURATION.' +
          'PROPERTY_DEFINITION_REPRESENTATION.DEFINITION') | (SIZEOF(
          QUERY ( rep <* USEDIN(pdr.used_representation.context_of_items,

'PLANT_SPATIAL_CONFIGURATION.REPRESENTATION.CONTEXT_OF_ITEMS')
          | (SIZEOF(QUERY ( prop_def_rep <* USEDIN(rep,
          'PLANT_SPATIAL_CONFIGURATION.' +
          'PROPERTY_DEFINITION_REPRESENTATION.USED_REPRESENTATION') |
          ((SIZEOF(['PLANT_SPATIAL_CONFIGURATION.SITE',
          'PLANT_SPATIAL_CONFIGURATION.SITE_BUILDING'] * TYPEOF(
          prop_def_rep.definition)) = 1) OR (
          'PLANT_SPATIAL_CONFIGURATION.PLANT' IN TYPEOF(prop_def_rep.
          definition.definition.formation.of_product))) )) >= 1) )) >=
           1) )) >= 1)) )) = 0));
    wr4: (SELF.frame_of_reference.name = 'functional definition');
    wr5: (SIZEOF(QUERY ( pds <* QUERY ( pd <* USEDIN(SELF,
          'PLANT_SPATIAL_CONFIGURATION.PROPERTY_DEFINITION.DEFINITION')
          | ('PLANT_SPATIAL_CONFIGURATION.PRODUCT_DEFINITION_SHAPE'
          IN TYPEOF(pd)) ) | (NOT (SIZEOF(QUERY ( sa <* USEDIN(pds,
          'PLANT_SPATIAL_CONFIGURATION.SHAPE_ASPECT.OF_SHAPE') |

(('PLANT_SPATIAL_CONFIGURATION.PLANT_LINE_SEGMENT_TERMINATION'
          IN TYPEOF(sa)) AND (sa.description =
          'piping line termination')) )) <= 2)) )) = 0);
  END_ENTITY; -- plant_line_definition

  ENTITY plant_line_segment_definition
    SUBTYPE OF (product_definition);
    WHERE
    wr1 : (SIZEOF(QUERY ( pdr <* USEDIN(SELF,
           'PLANT_SPATIAL_CONFIGURATION.' +

'PRODUCT_DEFINITION_RELATIONSHIP.RELATED_PRODUCT_DEFINITION')
           | ('PLANT_SPATIAL_CONFIGURATION.PLANT_LINE_DEFINITION' IN
           TYPEOF(pdr.relating_product_definition)) )) >= 1);
```

© ISO 2001 — All rights reserved

```
wr2 : (SIZEOF(QUERY ( pd <* USEDIN(SELF,
        'PLANT_SPATIAL_CONFIGURATION.PROPERTY_DEFINITION.DEFINITION')
        | ('PLANT_SPATIAL_CONFIGURATION.SHAPE_DEFINITION' IN
        TYPEOF(pd)) )) >= 1);
wr3 : (SELF.frame_of_reference\application_context_element.name =
        'functional definition');
wr4 : (SIZEOF(QUERY ( pdr <* USEDIN(SELF,
        'PLANT_SPATIAL_CONFIGURATION.' +
        'PROPERTY_DEFINITION_REPRESENTATION.DEFINITION') | (pdr.
        used_representation.name = 'line segment characteristics') ))
        = 1);
wr5 : (SIZEOF(QUERY ( lsc <* QUERY ( pdr <* USEDIN(SELF,
        'PLANT_SPATIAL_CONFIGURATION.' +
        'PROPERTY_DEFINITION_REPRESENTATION.DEFINITION') | (pdr.
        used_representation.name = 'line segment characteristics') )
         | (NOT (SIZEOF(lsc.used_representation.items) >= 2)) )) =
        0);
wr6 : (SIZEOF(QUERY ( lsc <* QUERY ( pdr <* USEDIN(SELF,
        'PLANT_SPATIAL_CONFIGURATION.' +
        'PROPERTY_DEFINITION_REPRESENTATION.DEFINITION') | (pdr.
        used_representation.name = 'line segment characteristics') )
         | (NOT (SIZEOF(QUERY ( it <* lsc.used_representation.items
         | ((
        'PLANT_SPATIAL_CONFIGURATION.MEASURE_REPRESENTATION_ITEM'
        IN TYPEOF(it)) AND (it.name = 'design pressure')) )) = 1)) ))
        = 0);
wr7 : (SIZEOF(QUERY ( lsc <* QUERY ( pdr <* USEDIN(SELF,
        'PLANT_SPATIAL_CONFIGURATION.' +
        'PROPERTY_DEFINITION_REPRESENTATION.DEFINITION') | (pdr.
        used_representation.name = 'line segment characteristics') )
         | (NOT (SIZEOF(QUERY ( it <* lsc.used_representation.items
         | ((SIZEOF(TYPEOF(it) * [
        'PLANT_SPATIAL_CONFIGURATION.MEASURE_REPRESENTATION_ITEM',
        'PLANT_SPATIAL_CONFIGURATION.' +
        'THERMODYNAMIC_TEMPERATURE_MEASURE_WITH_UNIT']) = 2) AND (
        it.name = 'design temperature')) )) = 1)) )) = 0);
wr8 : (SIZEOF(QUERY ( lsc <* QUERY ( pdr <* USEDIN(SELF,
        'PLANT_SPATIAL_CONFIGURATION.' +
        'PROPERTY_DEFINITION_REPRESENTATION.DEFINITION') | (pdr.
        used_representation.name = 'line segment characteristics') )
         | (NOT (SIZEOF(QUERY ( it <* lsc.used_representation.items
         | ((SIZEOF(TYPEOF(it) * [
        'PLANT_SPATIAL_CONFIGURATION.MEASURE_REPRESENTATION_ITEM',
        'PLANT_SPATIAL_CONFIGURATION.LENGTH_MEASURE_WITH_UNIT']) =
        2) AND (it.name = 'elevation')) )) <= 1)) )) = 0);
wr9 : (SIZEOF(QUERY ( lsc <* QUERY ( pdr <* USEDIN(SELF,
        'PLANT_SPATIAL_CONFIGURATION.' +
        'PROPERTY_DEFINITION_REPRESENTATION.DEFINITION') | (pdr.
        used_representation.name = 'line segment characteristics') )
         | (NOT (SIZEOF(QUERY ( it <* lsc.used_representation.items
         | ((
```

 © ISO 2001 — All rights reserved

```
        'PLANT_SPATIAL_CONFIGURATION.MEASURE_REPRESENTATION_ITEM'
        IN TYPEOF(it)) AND (it.name = 'corrosion allowance')) )) <=
         1)) )) = 0);
    wr10: ((NOT (SIZEOF(QUERY ( pdr <* USEDIN(SELF,
        'PLANT_SPATIAL_CONFIGURATION.' +

'PRODUCT_DEFINITION_RELATIONSHIP.RELATED_PRODUCT_DEFINITION')
        | (pdr.name = 'segment insulation') )) >= 1)) OR (SIZEOF(
        QUERY ( si <* QUERY ( pdr <* USEDIN(SELF,
        'PLANT_SPATIAL_CONFIGURATION.' +

'PRODUCT_DEFINITION_RELATIONSHIP.RELATED_PRODUCT_DEFINITION')
        | (pdr.name = 'segment insulation') ) | (NOT (SIZEOF(
        QUERY ( pd <* USEDIN(si,
        'PLANT_SPATIAL_CONFIGURATION.PROPERTY_DEFINITION.DEFINITION')
        | (NOT (SIZEOF(QUERY ( pds <* QUERY ( pdr <* USEDIN(pd,
        'PLANT_SPATIAL_CONFIGURATION.' +
        'PROPERTY_DEFINITION_REPRESENTATION.DEFINITION') | (
        'PLANT_SPATIAL_CONFIGURATION.PRODUCT_DEFINITION_SHAPE' IN
        TYPEOF(pdr)) ) | (pds.used_representation.name =
        'segment insulation characteristics') )) = 1)) )) = 0)) ))
        = 0));
    wr11: ((NOT (SIZEOF(QUERY ( pdr <* USEDIN(SELF,
        'PLANT_SPATIAL_CONFIGURATION.' +

'PRODUCT_DEFINITION_RELATIONSHIP.RELATED_PRODUCT_DEFINITION')
        | (pdr.name = 'segment insulation') )) >= 1)) OR (SIZEOF(
        QUERY ( si <* QUERY ( pdr <* USEDIN(SELF,
        'PLANT_SPATIAL_CONFIGURATION.' +

'PRODUCT_DEFINITION_RELATIONSHIP.RELATED_PRODUCT_DEFINITION')
        | (pdr.name = 'segment insulation') ) | (NOT (SIZEOF(
        QUERY ( pd <* USEDIN(si,
        'PLANT_SPATIAL_CONFIGURATION.PROPERTY_DEFINITION.DEFINITION')
        | (NOT (SIZEOF(QUERY ( sic <* QUERY ( pds <*
        QUERY ( pdr <* USEDIN(pd,'PLANT_SPATIAL_CONFIGURATION.' +
        'PROPERTY_DEFINITION_REPRESENTATION.DEFINITION') | (
        'PLANT_SPATIAL_CONFIGURATION.PRODUCT_DEFINITION_SHAPE' IN
        TYPEOF(pdr)) ) | (pds.used_representation.name =
        'segment insulation characteristics') ) | (SIZEOF(sic.
        used_representation.items) >= 1) )) = 1)) )) = 0)) )) = 0));
    wr12: ((NOT (SIZEOF(QUERY ( pdr <* USEDIN(SELF,
        'PLANT_SPATIAL_CONFIGURATION.' +
'PRODUCT_DEFINITION_RELATIONSHIP.RELATED_PRODUCT_DEFINITION')
         | (pdr.name = 'segment insulation') )) >= 1)) OR (SIZEOF(
        QUERY ( si <* QUERY ( pdr <* USEDIN(SELF,
        'PLANT_SPATIAL_CONFIGURATION.' +

'PRODUCT_DEFINITION_RELATIONSHIP.RELATED_PRODUCT_DEFINITION')
        | (pdr.name = 'segment insulation') ) | (NOT (SIZEOF(
        QUERY ( pd <* USEDIN(si,
        'PLANT_SPATIAL_CONFIGURATION.PROPERTY_DEFINITION.DEFINITION')
        | (NOT (SIZEOF(QUERY ( sic <* QUERY ( pds <*
        QUERY ( pdr <* USEDIN(pd,'PLANT_SPATIAL_CONFIGURATION.' +
```

© ISO 2001 — All rights reserved

```
        'PROPERTY_DEFINITION_REPRESENTATION.DEFINITION') | (
        'PLANT_SPATIAL_CONFIGURATION.PRODUCT_DEFINITION_SHAPE' IN
        TYPEOF(pdr)) ) | (pds.used_representation.name =
        'segment insulation characteristics') ) | ((1 <= SIZEOF(
        QUERY ( it <* sic.used_representation.items | ((SIZEOF(
        TYPEOF(it) * [
        'PLANT_SPATIAL_CONFIGURATION.MEASURE_REPRESENTATION_ITEM',
        'PLANT_SPATIAL_CONFIGURATION.LENGTH_MEASURE_WITH_UNIT']) =
        2) AND (it.name IN ['thickness','minimum thickness',
        'maximum thickness'])) ))) AND (SIZEOF(QUERY ( it <* sic.
        used_representation.items | ((SIZEOF(TYPEOF(it) * [
        'PLANT_SPATIAL_CONFIGURATION.MEASURE_REPRESENTATION_ITEM',
        'PLANT_SPATIAL_CONFIGURATION.LENGTH_MEASURE_WITH_UNIT']) =
        2) AND (it.name IN ['thickness','minimum thickness',
        'maximum thickness'])) )) <= 2)) )) = 1)) )) = 0)) )) = 0));
    wr13: ((NOT (SIZEOF(QUERY ( pdr <* USEDIN(SELF,
        'PLANT_SPATIAL_CONFIGURATION.' +

'PRODUCT_DEFINITION_RELATIONSHIP.RELATED_PRODUCT_DEFINITION')
        | (pdr.name = 'segment insulation') )) >= 1)) OR (SIZEOF(
        QUERY ( si <* QUERY ( pdr <* USEDIN(SELF,
        'PLANT_SPATIAL_CONFIGURATION.' +

'PRODUCT_DEFINITION_RELATIONSHIP.RELATED_PRODUCT_DEFINITION')
        | (pdr.name = 'segment insulation') ) | (NOT (SIZEOF(
        QUERY ( pd <* USEDIN(si,
        'PLANT_SPATIAL_CONFIGURATION.PROPERTY_DEFINITION.DEFINITION')
        | (NOT (SIZEOF(QUERY ( sic <* QUERY ( pds <*
        QUERY ( pdr <* USEDIN(pd,'PLANT_SPATIAL_CONFIGURATION.' +
        'PROPERTY_DEFINITION_REPRESENTATION.DEFINITION') | (
        'PLANT_SPATIAL_CONFIGURATION.PRODUCT_DEFINITION_SHAPE' IN
        TYPEOF(pdr)) ) | (pds.used_representation.name =
        'segment insulation characteristics') ) | (SIZEOF(
        QUERY ( it <* sic.used_representation.items | ((SIZEOF(
        TYPEOF(it) * [
        'PLANT_SPATIAL_CONFIGURATION.MEASURE_REPRESENTATION_ITEM',
        'PLANT_SPATIAL_CONFIGURATION.LENGTH_MEASURE_WITH_UNIT']) =
        2) AND (it.name = 'thickness')) )) <= 1) )) = 1)) )) = 0)) ))
        = 0));
    wr14: ((NOT (SIZEOF(QUERY ( pdr <* USEDIN(SELF,
        'PLANT_SPATIAL_CONFIGURATION.' +

'PRODUCT_DEFINITION_RELATIONSHIP.RELATED_PRODUCT_DEFINITION')
        | (pdr.name = 'segment insulation') )) >= 1)) OR (SIZEOF(
        QUERY ( si <* QUERY ( pdr <* USEDIN(SELF,
        'PLANT_SPATIAL_CONFIGURATION.' +

'PRODUCT_DEFINITION_RELATIONSHIP.RELATED_PRODUCT_DEFINITION')
         | (pdr.name = 'segment insulation') ) | (NOT (SIZEOF(
        QUERY ( pd <* USEDIN(si,
        'PLANT_SPATIAL_CONFIGURATION.PROPERTY_DEFINITION.DEFINITION')
```

 © ISO 2001 — All rights reserved

```
        | (NOT (SIZEOF(QUERY ( sic <* QUERY ( pds <*
        QUERY ( pdr <* USEDIN(pd,'PLANT_SPATIAL_CONFIGURATION.' +
        'PROPERTY_DEFINITION_REPRESENTATION.DEFINITION') | (
        'PLANT_SPATIAL_CONFIGURATION.PRODUCT_DEFINITION_SHAPE' IN
        TYPEOF(pdr)) ) | (pds.used_representation.name =
        'segment insulation characteristics') ) | (SIZEOF(
        QUERY ( it <* sic.used_representation.items | ((SIZEOF(
        TYPEOF(it) * [
        'PLANT_SPATIAL_CONFIGURATION.MEASURE_REPRESENTATION_ITEM',
        'PLANT_SPATIAL_CONFIGURATION.LENGTH_MEASURE_WITH_UNIT']) =
        2) AND (it.name = 'minimum thickness')) )) <= 1) )) = 1)) ))
        = 0)) )) = 0));
    wr15: ((NOT (SIZEOF(QUERY ( pdr <* USEDIN(SELF,
        'PLANT_SPATIAL_CONFIGURATION.' +

'PRODUCT_DEFINITION_RELATIONSHIP.RELATED_PRODUCT_DEFINITION')
        | (pdr.name = 'segment insulation') )) >= 1)) OR (SIZEOF(
        QUERY ( si <* QUERY ( pdr <* USEDIN(SELF,
        'PLANT_SPATIAL_CONFIGURATION.' +

'PRODUCT_DEFINITION_RELATIONSHIP.RELATED_PRODUCT_DEFINITION')
         | (pdr.name = 'segment insulation') ) | (NOT (SIZEOF(
        QUERY ( pd <* USEDIN(si,
        'PLANT_SPATIAL_CONFIGURATION.PROPERTY_DEFINITION.DEFINITION')
        | (NOT (SIZEOF(QUERY ( sic <* QUERY ( pds <*
        QUERY ( pdr <* USEDIN(pd,'PLANT_SPATIAL_CONFIGURATION.' +
        'PROPERTY_DEFINITION_REPRESENTATION.DEFINITION') | (
        'PLANT_SPATIAL_CONFIGURATION.PRODUCT_DEFINITION_SHAPE' IN
        TYPEOF(pdr)) ) | (pds.used_representation.name =
        'segment insulation characteristics') ) | (SIZEOF(
        QUERY ( it <* sic.used_representation.items | ((SIZEOF(
        TYPEOF(it) * [
        'PLANT_SPATIAL_CONFIGURATION.MEASURE_REPRESENTATION_ITEM',
        'PLANT_SPATIAL_CONFIGURATION.LENGTH_MEASURE_WITH_UNIT']) =
        2) AND (it.name = 'maximum thickness')) )) <= 1) )) = 1)) ))
        = 0)) )) = 0));
    wr16: ((NOT (SIZEOF(QUERY ( pdr <* USEDIN(SELF,
        'PLANT_SPATIAL_CONFIGURATION.' +

'PRODUCT_DEFINITION_RELATIONSHIP.RELATED_PRODUCT_DEFINITION')
         | (pdr.name = 'segment insulation') )) >= 1)) OR (SIZEOF(
        QUERY ( si <* QUERY ( pdr <* USEDIN(SELF,
        'PLANT_SPATIAL_CONFIGURATION.' +

'PRODUCT_DEFINITION_RELATIONSHIP.RELATED_PRODUCT_DEFINITION')
         | (pdr.name = 'segment insulation') ) | (NOT (SIZEOF(
        QUERY ( pd <* USEDIN(si,
        'PLANT_SPATIAL_CONFIGURATION.PROPERTY_DEFINITION.DEFINITION')
        | (NOT (SIZEOF(QUERY ( sic <* QUERY ( pds <*
        QUERY ( pdr <* USEDIN(pd,'PLANT_SPATIAL_CONFIGURATION.' +
        'PROPERTY_DEFINITION_REPRESENTATION.DEFINITION') | (
        'PLANT_SPATIAL_CONFIGURATION.PRODUCT_DEFINITION_SHAPE' IN
        TYPEOF(pdr)) ) | (pds.used_representation.name =
        'segment insulation characteristics') ) | (SIZEOF(
```

© ISO 2001 — All rights reserved

```
            QUERY ( it <* sic.used_representation.items |

(('PLANT_SPATIAL_CONFIGURATION.DESCRIPTIVE_REPRESENTATION_ITEM'
            IN TYPEOF(it)) AND (it.name = 'boundaries')) )) <= 1) )) =
            1)) )) = 0)) )) = 0));
    wr17: (SIZEOF(QUERY ( pds <* QUERY ( pd <* USEDIN(SELF,
            'PLANT_SPATIAL_CONFIGURATION.PROPERTY_DEFINITION.DEFINITION')
            | ('PLANT_SPATIAL_CONFIGURATION.PRODUCT_DEFINITION_SHAPE'
            IN TYPEOF(pd)) ) | (NOT (SIZEOF(QUERY ( sa <* USEDIN(pds,
            'PLANT_SPATIAL_CONFIGURATION.SHAPE_ASPECT.OF_SHAPE') |

('PLANT_SPATIAL_CONFIGURATION.PLANT_LINE_SEGMENT_TERMINATION'
            IN TYPEOF(sa)) )) = 2)) )) = 0);
  END_ENTITY; -- plant_line_segment_definition

  ENTITY plant_line_segment_termination
    SUBTYPE OF (shape_aspect);
    WHERE
      wr1: (((SELF.description = 'piping line segment termination') AND (
            'PLANT_SPATIAL_CONFIGURATION.PLANT_LINE_SEGMENT_DEFINITION'
            IN TYPEOF(SELF.of_shape.definition))) XOR ((SELF.description
            = 'piping line termination') AND

('PLANT_SPATIAL_CONFIGURATION.PRODUCT_DEFINITION_RELATIONSHIP'
            IN TYPEOF(SELF.of_shape.definition)) AND (
            'PLANT_SPATIAL_CONFIGURATION.PLANT_LINE_SEGMENT_DEFINITION'
            IN TYPEOF(SELF.of_shape.definition.
            related_product_definition)) AND (
            'PLANT_SPATIAL_CONFIGURATION.PLANT_LINE_DEFINITION' IN
            TYPEOF(SELF.of_shape.definition.relating_product_definition))));
    wr2: (SIZEOF(QUERY ( sar <* (USEDIN(SELF,
            'PLANT_SPATIAL_CONFIGURATION.' +
            'SHAPE_ASPECT_RELATIONSHIP.RELATING_SHAPE_ASPECT') + USEDIN(
            SELF,'PLANT_SPATIAL_CONFIGURATION.' +
            'SHAPE_ASPECT_RELATIONSHIP.RELATED_SHAPE_ASPECT')) | (NOT (
            SIZEOF(TYPEOF(sar) * [
            'PLANT_SPATIAL_CONFIGURATION.LINE_BRANCH_CONNECTION',
            'PLANT_SPATIAL_CONFIGURATION.LINE_PLANT_ITEM_CONNECTION',
            'PLANT_SPATIAL_CONFIGURATION.LINE_TERMINATION_CONNECTION'])
            = 1)) )) = 0);
    wr3: SIZEOF (QUERY (sar <*
            USEDIN (SELF, 'PLANT_SPATIAL_CONFIGURATION.'+
            'SHAPE_ASPECT_RELATIONSHIP.RELATED_SHAPE_ASPECT') |
            SIZEOF (TYPEOF (sar) *
            ['PLANT_SPATIAL_CONFIGURATION.LINE_TERMINATION_CONNECTION',
            'PLANT_SPATIAL_CONFIGURATION.LINE_BRANCH_CONNECTION']) = 1)) +
            SIZEOF (QUERY (sar <*
            USEDIN (SELF, 'PLANT_SPATIAL_CONFIGURATION.'+
            'SHAPE_ASPECT_RELATIONSHIP.RELATING_SHAPE_ASPECT') |
            'PLANT_SPATIAL_CONFIGURATION.LINE_PLANT_ITEM_CONNECTION'
            IN TYPEOF (sar))) = 1;
```

 © ISO 2001 — All rights reserved

```
END_ENTITY; -- plant_line_segment_termination

ENTITY plant_spatial_configuration_change_assignment
  SUBTYPE OF (action_assignment);
    items : SET [1:?] OF change_item;
  WHERE
    wr1: ('PLANT_SPATIAL_CONFIGURATION.CHANGE_ACTION' IN TYPEOF(SELF.
           assigned_action));
END_ENTITY; -- plant_spatial_configuration_change_assignment

ENTITY plant_spatial_configuration_organization_assignment
  SUBTYPE OF (organization_assignment);
    items : SET [1:?] OF plant_spatial_configuration_organization_item;
  WHERE
    wr1: plant_spatial_configuration_organization_correlation(SELF);
END_ENTITY; -- plant_spatial_configuration_organization_assignment

ENTITY plant_spatial_configuration_person_and_organization_assignment
  SUBTYPE OF (person_and_organization_assignment);
    items : SET [1:?] OF
              plant_spatial_configuration_person_and_organization_item;
  WHERE
    wr1: plant_spatial_configuration_person_and_organization_correlation(
           SELF);
END_ENTITY; -- plant_spatial_configuration_person_and_organization_assignment

ENTITY plant_spatial_configuration_person_assignment
  SUBTYPE OF (person_assignment);
    items : SET [1:?] OF plant_spatial_configuration_person_item;
  WHERE
    wr1: plant_spatial_configuration_person_correlation(SELF);
END_ENTITY; -- plant_spatial_configuration_person_assignment

ENTITY point
  SUPERTYPE OF (ONEOF (cartesian_point,point_on_curve,point_on_surface,
      point_replica,degenerate_pcurve))
  SUBTYPE OF (geometric_representation_item);
END_ENTITY; -- point

ENTITY point_on_curve
  SUBTYPE OF (point);
    basis_curve     : curve;
    point_parameter : parameter_value;
END_ENTITY; -- point_on_curve

ENTITY point_on_surface
  SUBTYPE OF (point);
    basis_surface     : surface;
    point_parameter_u : parameter_value;
    point_parameter_v : parameter_value;
END_ENTITY; -- point_on_surface

ENTITY point_replica
  SUBTYPE OF (point);
```

© ISO 2001 — All rights reserved

```
    parent_pt      : point;
    transformation : cartesian_transformation_operator;
  WHERE
    wr1: (transformation.dim = parent_pt.dim);
    wr2: acyclic_point_replica(SELF,parent_pt);
END_ENTITY; -- point_replica

ENTITY poly_loop
  SUBTYPE OF (loop, geometric_representation_item);
    polygon : LIST [3:?] OF cartesian_point;
END_ENTITY; -- poly_loop

ENTITY polyline
  SUBTYPE OF (bounded_curve);
    points : LIST [2:?] OF cartesian_point;
END_ENTITY; -- polyline

ENTITY pre_defined_item;
    name : label;
END_ENTITY; -- pre_defined_item

ENTITY precision_qualifier;
    precision_value : INTEGER;
END_ENTITY; -- precision_qualifier

ENTITY presentation_layer_assignment;
    name           : label;
    description    : text;
    assigned_items : SET [1:?] OF layered_item;
END_ENTITY; -- presentation_layer_assignment

ENTITY process_capability
  SUBTYPE OF (property_definition);
  WHERE
    wr1: ('PLANT_SPATIAL_CONFIGURATION.PLANT' IN TYPEOF(SELF.definition\
           product_definition.formation.of_product));
    wr2: (SIZEOF(QUERY ( pdr <* USEDIN(SELF,

'PLANT_SPATIAL_CONFIGURATION.PROPERTY_DEFINITION_REPRESENTATION.'
           + 'DEFINITION') | ((pdr.used_representation.name =
           'production capacity') AND (NOT (SIZEOF(QUERY ( it <* pdr.
           used_representation.items |

(('PLANT_SPATIAL_CONFIGURATION.DESCRIPTIVE_REPRESENTATION_ITEM'
           IN TYPEOF(it)) AND (it.name = 'production type')) )) = 1))) ))
           = 0);
END_ENTITY; -- process_capability

ENTITY product;
    id              : identifier;
    name            : label;
```

 © ISO 2001 — All rights reserved

```
   description       : OPTIONAL text;
   frame_of_reference : SET [1:?] OF product_context;
END_ENTITY; -- product

ENTITY product_context
  SUBTYPE OF (application_context_element);
   discipline_type : label;
END_ENTITY; -- product_context

ENTITY product_definition;
   id                : identifier;
   description       : OPTIONAL text;
   formation         : product_definition_formation;
   frame_of_reference : product_definition_context;
  DERIVE
   name : label := get_name_value(SELF);
  WHERE
   wr1: (SIZEOF(USEDIN(SELF,'PLANT_SPATIAL_CONFIGURATION.' +
          'NAME_ATTRIBUTE.NAMED_ITEM')) <= 1);
END_ENTITY; -- product_definition

ENTITY product_definition_context
  SUBTYPE OF (application_context_element);
   life_cycle_stage : label;
END_ENTITY; -- product_definition_context

ENTITY product_definition_formation;
   id          : identifier;
   description : OPTIONAL text;
   of_product  : product;
  UNIQUE
   ur1 : id, of_product;
END_ENTITY; -- product_definition_formation

ENTITY product_definition_formation_relationship;
   id                                : identifier;
   name                              : label;
   description                       : OPTIONAL text;
   relating_product_definition_formation : product_definition_formation;
   related_product_definition_formation  : product_definition_formation;
END_ENTITY; -- product_definition_formation_relationship

ENTITY product_definition_formation_with_specified_source
  SUBTYPE OF (product_definition_formation);
   make_or_buy : source;
END_ENTITY; -- product_definition_formation_with_specified_source

ENTITY product_definition_relationship;
   id                        : identifier;
   name                      : label;
   description               : OPTIONAL text;
   relating_product_definition : product_definition;
   related_product_definition  : product_definition;
END_ENTITY; -- product_definition_relationship
```

© ISO 2001 — All rights reserved

```
ENTITY product_definition_shape
  SUBTYPE OF (property_definition);
  UNIQUE
    ur1 : definition;
  WHERE
    wr1: (SIZEOF

(['PLANT_SPATIAL_CONFIGURATION.CHARACTERIZED_PRODUCT_DEFINITION',
          'PLANT_SPATIAL_CONFIGURATION.CHARACTERIZED_OBJECT'] *
           TYPEOF(SELF\property_definition.definition)) > 0);
END_ENTITY; -- product_definition_shape

ENTITY product_definition_substitute;
    description          : OPTIONAL text;
    context_relationship  : product_definition_relationship;
    substitute_definition : product_definition;
  DERIVE
    name : label := get_name_value(SELF);
  WHERE
    wr1: (context_relationship.related_product_definition :<>:
          substitute_definition);
    wr2: (SIZEOF(USEDIN(SELF,'PLANT_SPATIAL_CONFIGURATION.' +
          'NAME_ATTRIBUTE.NAMED_ITEM')) <= 1);
END_ENTITY; -- product_definition_substitute

ENTITY product_definition_usage
  SUPERTYPE OF (ONEOF (make_from_usage_option,assembly_component_usage))
  SUBTYPE OF (product_definition_relationship);
  WHERE
    wr1: acyclic_product_definition_relationship(SELF,[SELF\
          product_definition_relationship.related_product_definition],
          'PLANT_SPATIAL_CONFIGURATION.PRODUCT_DEFINITION_USAGE');
END_ENTITY; -- product_definition_usage

ENTITY product_definition_with_associated_documents
  SUBTYPE OF (product_definition);
    documentation_ids : SET [1:?] OF document;
END_ENTITY; -- product_definition_with_associated_documents

ENTITY product_material_composition_relationship
  SUBTYPE OF (product_definition_relationship);
    class               : label;
    constituent_amount   : SET [1:?] OF measure_with_unit;
    composition_basis    : label;
    determination_method : text;
END_ENTITY; -- product_material_composition_relationship

ENTITY property_definition;
    name       : label;
    description : OPTIONAL text;
```

 © ISO 2001 — All rights reserved

```
    definition  : characterized_definition;
  DERIVE
    id : identifier := get_id_value(SELF);
  WHERE
    wr1: (SIZEOF(USEDIN(SELF,'PLANT_SPATIAL_CONFIGURATION.' +
          'ID_ATTRIBUTE.IDENTIFIED_ITEM')) <= 1);
END_ENTITY; -- property_definition

ENTITY property_definition_relationship;
    name                        : label;
    description                 : text;
    relating_property_definition : property_definition;
    related_property_definition  : property_definition;
END_ENTITY; -- property_definition_relationship

ENTITY property_definition_representation;
    definition          : represented_definition;
    used_representation : representation;
  DERIVE
    description : text := get_description_value(SELF);
    name        : label := get_name_value(SELF);
  WHERE
    wr1: (SIZEOF(USEDIN(SELF,'PLANT_SPATIAL_CONFIGURATION.' +
          'DESCRIPTION_ATTRIBUTE.DESCRIBED_ITEM')) <= 1);
    wr2: (SIZEOF(USEDIN(SELF,'PLANT_SPATIAL_CONFIGURATION.' +
          'NAME_ATTRIBUTE.NAMED_ITEM')) <= 1);
END_ENTITY; -- property_definition_representation

ENTITY purchase_assignment
  SUBTYPE OF (action_assignment);
    items : SET [1:?] OF purchase_item;
END_ENTITY; -- purchase_assignment

ENTITY qualified_representation_item
  SUBTYPE OF (representation_item);
    qualifiers : SET [1:?] OF value_qualifier;
  WHERE
    wr1: (SIZEOF(QUERY ( temp <* qualifiers | (
          'PLANT_SPATIAL_CONFIGURATION.PRECISION_QUALIFIER' IN TYPEOF(
          temp)) )) < 2);
END_ENTITY; -- qualified_representation_item

ENTITY quasi_uniform_curve
  SUBTYPE OF (b_spline_curve);
END_ENTITY; -- quasi_uniform_curve

ENTITY quasi_uniform_surface
  SUBTYPE OF (b_spline_surface);
END_ENTITY; -- quasi_uniform_surface

ENTITY ratio_measure_with_unit
  SUBTYPE OF (measure_with_unit);
  WHERE
```

© ISO 2001 — All rights reserved

```
    wr1: ('PLANT_SPATIAL_CONFIGURATION.RATIO_UNIT' IN
TYPEOF(SELF\measure_with_unit.
            unit_component));
  END_ENTITY; -- ratio_measure_with_unit

  ENTITY ratio_unit
    SUBTYPE OF (named_unit);
    WHERE
      wr1: ((SELF\named_unit.dimensions.length_exponent = 0) AND (SELF\
            named_unit.dimensions.mass_exponent = 0) AND (SELF\
            named_unit.dimensions.time_exponent = 0) AND (SELF\
            named_unit.dimensions.electric_current_exponent = 0) AND (
            SELF\named_unit.dimensions.
            thermodynamic_temperature_exponent = 0) AND (SELF\named_unit
            .dimensions.amount_of_substance_exponent = 0) AND (SELF\
            named_unit.dimensions.luminous_intensity_exponent = 0));
  END_ENTITY; -- ratio_unit

  ENTITY rational_b_spline_curve
    SUBTYPE OF (b_spline_curve);
      weights_data : LIST [2:?] OF REAL;
    DERIVE
      weights : ARRAY [0:100] OF REAL := list_to_array(weights_data,0,
                upper_index_on_control_points);
    WHERE
      wr1: (SIZEOF(weights_data) = SIZEOF(SELF\b_spline_curve.
            control_points_list));
      wr2: curve_weights_positive(SELF);
  END_ENTITY; -- rational_b_spline_curve

  ENTITY rational_b_spline_surface
    SUBTYPE OF (b_spline_surface);
      weights_data : LIST [2:?] OF LIST [2:?] OF REAL;
    DERIVE
      weights : ARRAY [0:100] OF ARRAY [0:100] OF REAL :=
                make_array_of_array(weights_data,0,u_upper,0,v_upper);
    WHERE
      wr1: ((SIZEOF(weights_data) = SIZEOF(SELF\b_spline_surface.
            control_points_list)) AND (SIZEOF(weights_data[1]) = SIZEOF(
            SELF\b_spline_surface.control_points_list[1])));
      wr2: surface_weights_positive(SELF);
  END_ENTITY; -- rational_b_spline_surface

  ENTITY rectangular_composite_surface
    SUBTYPE OF (bounded_surface);
      segments : LIST [1:?] OF LIST [1:?] OF surface_patch;
    DERIVE
      n_u : INTEGER := SIZEOF(segments);
      n_v : INTEGER := SIZEOF(segments[1]);
    WHERE
      wr1: (SIZEOF(QUERY ( s <* segments | (n_v <> SIZEOF(s)) )) = 0);
```

 © ISO 2001 — All rights reserved

```
    wr2: constraints_rectangular_composite_surface(SELF);
  END_ENTITY; -- rectangular_composite_surface

  ENTITY rectangular_pyramid
    SUBTYPE OF (geometric_representation_item);
    position : axis2_placement_3d;
    xlength  : positive_length_measure;
    ylength  : positive_length_measure;
    height   : positive_length_measure;
  END_ENTITY; -- rectangular_pyramid

  ENTITY rectangular_trimmed_surface
    SUBTYPE OF (bounded_surface);
    basis_surface : surface;
    u1          : parameter_value;
    u2          : parameter_value;
    v1          : parameter_value;
    v2          : parameter_value;
    usense        : BOOLEAN;
    vsense        : BOOLEAN;
    WHERE
    wr1: (u1 <> u2);
    wr2: (v1 <> v2);
    wr3: ((('PLANT_SPATIAL_CONFIGURATION.ELEMENTARY_SURFACE' IN
          TYPEOF(basis_surface))
          AND (NOT ('PLANT_SPATIAL_CONFIGURATION.PLANE' IN
          TYPEOF(basis_surface))))
          OR ('PLANT_SPATIAL_CONFIGURATION.SURFACE_OF_REVOLUTION' IN
          TYPEOF(basis_surface)) OR (usense = (u2 > u1)));
    wr4: (('PLANT_SPATIAL_CONFIGURATION.SPHERICAL_SURFACE' IN
          TYPEOF(basis_surface))
          OR ('PLANT_SPATIAL_CONFIGURATION.TOROIDAL_SURFACE' IN TYPEOF(
          basis_surface)) OR (vsense = (v2 > v1)));
  END_ENTITY; -- rectangular_trimmed_surface

  ENTITY reducer_fitting_class
    SUBTYPE OF (group);
    WHERE
    wr1: (SIZEOF(QUERY ( aca <* QUERY ( ca <* USEDIN(SELF,
          'PLANT_SPATIAL_CONFIGURATION.CLASSIFICATION_ASSIGNMENT.' +
          'ASSIGNED_CLASS') |

('PLANT_SPATIAL_CONFIGURATION.APPLIED_CLASSIFICATION_ASSIGNMENT'
          IN TYPEOF(ca)) ) | (NOT (SIZEOF(QUERY ( it <* aca.items | (
          NOT (
          'PLANT_SPATIAL_CONFIGURATION.PIPING_COMPONENT_DEFINITION' IN
           TYPEOF(it))) )) = 0)) )) = 0);
    wr2: (SIZEOF(QUERY ( aca <* QUERY ( ca <* USEDIN(SELF,
          'PLANT_SPATIAL_CONFIGURATION.CLASSIFICATION_ASSIGNMENT.' +
          'ASSIGNED_CLASS') |

('PLANT_SPATIAL_CONFIGURATION.APPLIED_CLASSIFICATION_ASSIGNMENT'
          IN TYPEOF(ca)) ) | (NOT (SIZEOF(QUERY ( pcd <*
          QUERY ( it <* aca.items | (
```

© ISO 2001 — All rights reserved

```
            'PLANT_SPATIAL_CONFIGURATION.PIPING_COMPONENT_DEFINITION' IN
             TYPEOF(it)) ) | (NOT (SIZEOF(QUERY ( aca1 <* USEDIN(pcd.
            formation.of_product,'PLANT_SPATIAL_CONFIGURATION.' +
            'APPLIED_CLASSIFICATION_ASSIGNMENT.ITEMS') | class_in_tree(
            aca1.assigned_class,'reducer') )) = 1)) )) = 0)) )) = 0);
END_ENTITY; -- reducer_fitting_class

ENTITY reference_geometry
  SUBTYPE OF (derived_shape_aspect);
  WHERE
    wr1: (SIZEOF(QUERY ( pd <* USEDIN(SELF,
            'PLANT_SPATIAL_CONFIGURATION.' +
            'PROPERTY_DEFINITION.DEFINITION') | (NOT (SIZEOF(USEDIN(pd,
            'PLANT_SPATIAL_CONFIGURATION.' +
            'PROPERTY_DEFINITION_REPRESENTATION.DEFINITION')) >= 1)) ))
            = 0);
END_ENTITY; -- reference_geometry

ENTITY reinforcing_component_definition
  SUBTYPE OF (product_definition);
END_ENTITY; -- reinforcing_component_definition

ENTITY reparametrised_composite_curve_segment
  SUBTYPE OF (composite_curve_segment);
    param_length : parameter_value;
  WHERE
    wr1: (param_length > 0);
END_ENTITY; -- reparametrised_composite_curve_segment

ENTITY representation;
    name            : label;
    items           : SET [1:?] OF representation_item;
    context_of_items : representation_context;
  DERIVE
    id          : identifier := get_id_value(SELF);
    description : text := get_description_value(SELF);
  WHERE
    wr1: (SIZEOF(USEDIN(SELF,'PLANT_SPATIAL_CONFIGURATION.' +
            'ID_ATTRIBUTE.IDENTIFIED_ITEM')) <= 1);
    wr2: (SIZEOF(USEDIN(SELF,'PLANT_SPATIAL_CONFIGURATION.' +
            'DESCRIPTION_ATTRIBUTE.DESCRIBED_ITEM')) <= 1);
END_ENTITY; -- representation

ENTITY representation_context;
    context_identifier : identifier;
    context_type       : text;
  INVERSE
    representations_in_context : SET [1:?] OF representation FOR
                                 context_of_items;
END_ENTITY; -- representation_context
```

 © ISO 2001 — All rights reserved

```
ENTITY representation_item;
   name : label;
  WHERE
   wr1: (SIZEOF(using_representations(SELF)) > 0);
END_ENTITY; -- representation_item

ENTITY representation_item_relationship;
   name                        : label;
   description                 : OPTIONAL text;
   relating_representation_item : representation_item;
   related_representation_item  : representation_item;
END_ENTITY; -- representation_item_relationship

ENTITY representation_map;
   mapping_origin       : representation_item;
   mapped_representation : representation;
  INVERSE
   map_usage : SET [1:?] OF mapped_item FOR mapping_source;
  WHERE
   wr1: item_in_context(SELF.mapping_origin,SELF.mapped_representation.
          context_of_items);
END_ENTITY; -- representation_map

ENTITY required_material_property
  SUBTYPE OF (material_property);
  WHERE
   wr1: ((SIZEOF(TYPEOF(SELF\property_definition.definition) * [
          'PLANT_SPATIAL_CONFIGURATION.PLANT_ITEM_CONNECTOR',
          'PLANT_SPATIAL_CONFIGURATION.' +
          'EXTERNALLY_DEFINED_PLANT_ITEM_DEFINITION']) = 1) OR ((
          'PLANT_SPATIAL_CONFIGURATION.PRODUCT_DEFINITION' IN TYPEOF(
          SELF.definition)) AND (SIZEOF(QUERY ( pc <* SELF\
          property_definition.definition\product_definition.formation.
          of_product.frame_of_reference | (pc.discipline_type =
          'process plant') )) = 1)));
   wr2: (SIZEOF(QUERY ( ra <* QUERY ( pdr <* USEDIN(SELF,
          'PLANT_SPATIAL_CONFIGURATION.' +

'PROPERTY_DEFINITION_RELATIONSHIP.RELATED_PROPERTY_DEFINITION')
          | (pdr.name = 'requirement allocation') ) | (
          'PLANT_SPATIAL_CONFIGURATION.MATERIAL_PROPERTY' IN TYPEOF(ra
          .relating_property_definition)) )) >= 1);
END_ENTITY; -- required_material_property

ENTITY reserved_space
  SUBTYPE OF (shape_aspect);
  WHERE
   wr1: (SELF\shape_aspect.of_shape\property_definition.definition\
          product_definition.frame_of_reference\
          application_context_element.name = 'physical occurrence');
END_ENTITY; -- reserved_space

ENTITY revolved_area_solid
  SUBTYPE OF (swept_area_solid);
```

© ISO 2001 — All rights reserved

```
    axis  : axis1_placement;
    angle : plane_angle_measure;
  DERIVE
    axis_line : line := dummy_gri || curve() || line(axis.location,
                dummy_gri || vector(axis.z,1));
END_ENTITY; -- revolved_area_solid

ENTITY revolved_face_solid
  SUBTYPE OF (swept_face_solid);
    axis  : axis1_placement;
    angle : plane_angle_measure;
  DERIVE
    axis_line : line := dummy_gri || curve() || line(axis.location,
                dummy_gri || vector(axis.z,1));
END_ENTITY; -- revolved_face_solid

ENTITY right_angular_wedge
  SUBTYPE OF (geometric_representation_item);
    position : axis2_placement_3d;
    x        : positive_length_measure;
    y        : positive_length_measure;
    z        : positive_length_measure;
    ltx      : length_measure;
  WHERE
    wr1: ((0 <= ltx) AND (ltx < x));
END_ENTITY; -- right_angular_wedge

ENTITY right_circular_cone
  SUBTYPE OF (geometric_representation_item);
    position   : axis1_placement;
    height     : positive_length_measure;
    radius     : length_measure;
    semi_angle : plane_angle_measure;
  WHERE
    wr1: (radius >= 0);
END_ENTITY; -- right_circular_cone

ENTITY right_circular_cylinder
  SUBTYPE OF (geometric_representation_item);
    position : axis1_placement;
    height   : positive_length_measure;
    radius   : positive_length_measure;
END_ENTITY; -- right_circular_cylinder

ENTITY role_association;
    role           : object_role;
    item_with_role : role_select;
END_ENTITY; -- role_association

ENTITY seam_curve
  SUBTYPE OF (surface_curve);
```

 © ISO 2001 — All rights reserved

```
  WHERE
    wr1: (SIZEOF(SELF\surface_curve.associated_geometry) = 2);
    wr2: (associated_surface(SELF\surface_curve.associated_geometry[1])
            = associated_surface(SELF\surface_curve.associated_geometry[
            2]));
    wr3: ('PLANT_SPATIAL_CONFIGURATION.PCURVE' IN TYPEOF(SELF\surface_curve.
            associated_geometry[1]));
    wr4: ('PLANT_SPATIAL_CONFIGURATION.PCURVE' IN TYPEOF(SELF\surface_curve.
            associated_geometry[2]));
END_ENTITY; -- seam_curve

ENTITY shape_aspect;
    name                : label;
    description          : OPTIONAL text;
    of_shape             : product_definition_shape;
    product_definitional : LOGICAL;
  DERIVE
    id : identifier := get_id_value(SELF);
  WHERE
    wr1: (SIZEOF(USEDIN(SELF,'PLANT_SPATIAL_CONFIGURATION.' +
            'ID_ATTRIBUTE.IDENTIFIED_ITEM')) <= 1);
END_ENTITY; -- shape_aspect

ENTITY shape_aspect_deriving_relationship
     SUBTYPE OF (shape_aspect_relationship);
   WHERE
     WR1: 'PLANT_SPATIAL_CONFIGURATION.DERIVED_SHAPE_ASPECT' IN TYPEOF
         (SELF\SHAPE_ASPECT_RELATIONSHIP.RELATING_SHAPE_ASPECT);
 END_ENTITY;

ENTITY shape_aspect_relationship;
    name                : label;
    description          : OPTIONAL text;
    relating_shape_aspect : shape_aspect;
    related_shape_aspect  : shape_aspect;
  DERIVE
    id : identifier := get_id_value(SELF);
  WHERE
    wr1: (SIZEOF(USEDIN(SELF,'PLANT_SPATIAL_CONFIGURATION.' +
            'ID_ATTRIBUTE.IDENTIFIED_ITEM')) <= 1);
END_ENTITY; -- shape_aspect_relationship

ENTITY shape_definition_representation
  SUBTYPE OF (property_definition_representation);
  WHERE
    wr1: (('PLANT_SPATIAL_CONFIGURATION.PRODUCT_DEFINITION_SHAPE'
            IN TYPEOF(SELF.definition)) OR (
            'PLANT_SPATIAL_CONFIGURATION.SHAPE_DEFINITION' IN
            TYPEOF(SELF.definition.definition)));
    wr2: ('PLANT_SPATIAL_CONFIGURATION.SHAPE_REPRESENTATION'
            IN TYPEOF(SELF.used_representation));
END_ENTITY; -- shape_definition_representation

ENTITY shape_dimension_representation
```

© ISO 2001 — All rights reserved

```
  SUBTYPE OF (shape_representation);
  WHERE
    wr1: (SIZEOF(QUERY ( temp <* SELF\representation.items | (NOT (
           'PLANT_SPATIAL_CONFIGURATION.MEASURE_REPRESENTATION_ITEM' IN
           TYPEOF(temp))) )) = 0);
    wr2: (SIZEOF(SELF\representation.items) <= 3);
    wr3: (SIZEOF(QUERY ( pos_mri <* QUERY ( real_mri <* SELF\
           representation.items | ('REAL' IN TYPEOF(real_mri\
           measure_with_unit.value_component)) ) | (NOT (pos_mri\
           measure_with_unit.value_component > 0)) )) = 0);
END_ENTITY; -- shape_dimension_representation

ENTITY shape_representation
  SUBTYPE OF (representation);
END_ENTITY; -- shape_representation

ENTITY shell_based_wireframe_model
  SUBTYPE OF (geometric_representation_item);
    sbwm_boundary : SET [1:?] OF shell;
  WHERE
    wr1: constraints_geometry_shell_based_wireframe_model(SELF);
END_ENTITY; -- shell_based_wireframe_model

ENTITY si_unit
  SUBTYPE OF (named_unit);
    prefix : OPTIONAL si_prefix;
    name   : si_unit_name;
  DERIVE
    SELF\named_unit.dimensions : dimensional_exponents :=
                                 dimensions_for_si_unit(name);
END_ENTITY; -- si_unit

ENTITY site
  SUBTYPE OF (characterized_object, property_definition);
  WHERE
    wr1: ('PLANT_SPATIAL_CONFIGURATION.PLANT' IN TYPEOF(SELF\
           property_definition.definition\product_definition.formation.
           of_product));
END_ENTITY; -- site

ENTITY site_building
  SUBTYPE OF (property_definition);
  WHERE
    wr1: ('PLANT_SPATIAL_CONFIGURATION.SITE' IN TYPEOF(SELF.definition));
    wr2: (SIZEOF(QUERY ( pdr <* USEDIN(SELF,
           'PLANT_SPATIAL_CONFIGURATION.' +
           'PROPERTY_DEFINITION_REPRESENTATION.DEFINITION') | ((pdr.
           used_representation.name = 'building number') AND (SIZEOF(
           QUERY ( it <* pdr.used_representation.items |

('PLANT_SPATIAL_CONFIGURATION.DESCRIPTIVE_REPRESENTATION_ITEM'
```

 © ISO 2001 — All rights reserved

```
            IN TYPEOF(it)) )) = 1)) )) = 1);
    wr3: (SIZEOF(QUERY ( pdr <* USEDIN(SELF,
            'PLANT_SPATIAL_CONFIGURATION.' +
            'PROPERTY_DEFINITION_REPRESENTATION.DEFINITION') | (SIZEOF(
            QUERY ( it <* pdr.used_representation.items | ((SIZEOF([
            'PLANT_SPATIAL_CONFIGURATION.AXIS2_PLACEMENT_2D',
            'PLANT_SPATIAL_CONFIGURATION.AXIS2_PLACEMENT_3D'] * TYPEOF(
            it)) = 1) AND (it.name = 'building orientation') AND (it.
            location.name = 'building location')) )) = 1) )) <= 1);
  END_ENTITY; -- site_building

  ENTITY site_feature
   SUBTYPE OF (property_definition);
   WHERE
    wr1: ('PLANT_SPATIAL_CONFIGURATION.SITE' IN TYPEOF(SELF.definition));
    wr2: (SIZEOF(USEDIN(SELF,'PLANT_SPATIAL_CONFIGURATION.' +
            'PROPERTY_DEFINITION_REPRESENTATION.DEFINITION')) = 3);
    wr3: (SIZEOF(QUERY ( pdr <* USEDIN(SELF,
            'PLANT_SPATIAL_CONFIGURATION.' +
            'PROPERTY_DEFINITION_REPRESENTATION.DEFINITION') | (SIZEOF(
            QUERY ( it <* pdr.used_representation.items |

(('PLANT_SPATIAL_CONFIGURATION.DESCRIPTIVE_REPRESENTATION_ITEM'
            IN TYPEOF(it)) AND (it.name = 'site feature type')) )) = 1) ))
            = 1);
    wr4: (SIZEOF(QUERY ( pdr <* USEDIN(SELF,
            'PLANT_SPATIAL_CONFIGURATION.' +
            'PROPERTY_DEFINITION_REPRESENTATION.DEFINITION') | (SIZEOF(
            QUERY ( it <* pdr.used_representation.items | ((SIZEOF([
            'PLANT_SPATIAL_CONFIGURATION.AXIS2_PLACEMENT_2D',
            'PLANT_SPATIAL_CONFIGURATION.AXIS2_PLACEMENT_3D'] * TYPEOF(
            it)) = 1) AND (it.name = 'feature orientation') AND (it.
            location.name = 'feature location')) )) = 1) )) = 1);
    wr5: (SIZEOF(QUERY ( pdr <* USEDIN(SELF,
            'PLANT_SPATIAL_CONFIGURATION.' +
            'PROPERTY_DEFINITION_REPRESENTATION.DEFINITION') | (SIZEOF(
            QUERY ( it <* pdr.used_representation.items |

(('PLANT_SPATIAL_CONFIGURATION.DESCRIPTIVE_REPRESENTATION_ITEM'
            IN TYPEOF(pdr.used_representation)) AND (it.name =
            'origin type') AND (it.description IN ['man made','natural'])) ))
            = 1) )) = 1);
  END_ENTITY; -- site_feature

  ENTITY site_representation
   SUBTYPE OF (shape_representation);
   WHERE
    wr1: (SIZEOF(QUERY ( pdr <* USEDIN(SELF,
            'PLANT_SPATIAL_CONFIGURATION.' +
            'PROPERTY_DEFINITION_REPRESENTATION.USED_REPRESENTATION') |
            (NOT ('PLANT_SPATIAL_CONFIGURATION.SITE' IN TYPEOF(pdr.
            definition.definition))) )) = 0);
    wr2: (SIZEOF(QUERY ( item <* SELF.items | (NOT (SIZEOF([
            'PLANT_SPATIAL_CONFIGURATION.CONNECTED_FACE_SET',
```

© ISO 2001 — All rights reserved

```
        'PLANT_SPATIAL_CONFIGURATION.GEOMETRIC_CURVE_SET'] * TYPEOF(
        item)) = 1)) )) = 1);
    wr3: (SIZEOF(QUERY ( cfs <* QUERY ( item <* SELF.items | (
        'PLANT_SPATIAL_CONFIGURATION.CONNECTED_FACE_SET' IN TYPEOF(
        item)) ) | (NOT (SIZEOF(QUERY ( fcs <* cfs\
        connected_face_set.cfs_faces | (NOT (SIZEOF(QUERY ( bnds <*
        fcs.bounds | (NOT ('PLANT_SPATIAL_CONFIGURATION.POLY_LOOP'
        IN TYPEOF(bnds.bound))) )) = 0)) )) = 0)) )) = 0);
    wr4: (SIZEOF(QUERY ( cfs <* QUERY ( item <* SELF.items | (
        'PLANT_SPATIAL_CONFIGURATION.CONNECTED_FACE_SET' IN TYPEOF(
        item)) ) | (NOT (SIZEOF(QUERY ( fcs <* cfs\
        connected_face_set.cfs_faces | (NOT (SIZEOF(QUERY ( bnds <*
        fcs.bounds | (NOT (SIZEOF(bnds.bound\poly_loop.polygon) = 3)) ))
        = 0)) )) = 0)) )) = 0);
    wr5: (SIZEOF(QUERY ( gcs <* QUERY ( item <* SELF.items | (
        'PLANT_SPATIAL_CONFIGURATION.GEOMETRIC_CURVE_SET' IN TYPEOF(
        item)) ) | (NOT (SIZEOF(QUERY ( el <* gcs\geometric_set.
        elements | (NOT (SIZEOF([
        'PLANT_SPATIAL_CONFIGURATION.CARTESIAN_POINT',
        'PLANT_SPATIAL_CONFIGURATION.POLYLINE'] * TYPEOF(el)) = 1)) ))
        = 0)) )) = 0);
    wr6: (SIZEOF(QUERY ( gcs <* QUERY ( item <* SELF.items | (
        'PLANT_SPATIAL_CONFIGURATION.GEOMETRIC_CURVE_SET' IN TYPEOF(
        item)) ) | (NOT (SIZEOF(QUERY ( el <* gcs\geometric_set.
        elements | ('PLANT_SPATIAL_CONFIGURATION.CARTESIAN_POINT' IN
         TYPEOF(el)) )) >= 1)) )) = 0);
    wr7: (SIZEOF(QUERY ( gcs <* QUERY ( item <* SELF.items | (
        'PLANT_SPATIAL_CONFIGURATION.GEOMETRIC_CURVE_SET' IN TYPEOF(
        item)) ) | (NOT (SIZEOF(QUERY ( pline <* QUERY ( el <* gcs\
        geometric_set.elements | (
        'PLANT_SPATIAL_CONFIGURATION.POLYLINE' IN TYPEOF(el)) ) | (
        NOT (SIZEOF(QUERY ( pline_pt <* pline\polyline.points | (
        NOT (pline_pt IN gcs\geometric_set.elements)) )) = 0)) )) =
        0)) )) = 0);
END_ENTITY; -- site_representation

ENTITY sited_plant
  SUBTYPE OF (property_definition);
  WHERE
    wr1: ('PLANT_SPATIAL_CONFIGURATION.PRODUCT_DEFINITION' IN TYPEOF(
        SELF.definition));
    wr2: (SELF.definition.frame_of_reference.name =
        'physical occurrence');
END_ENTITY; -- sited_plant

ENTITY solid_angle_measure_with_unit
  SUBTYPE OF (measure_with_unit);
  WHERE
    wr1: ('PLANT_SPATIAL_CONFIGURATION.SOLID_ANGLE_UNIT' IN TYPEOF(SELF\
        measure_with_unit.unit_component));
END_ENTITY; -- solid_angle_measure_with_unit
```

 © ISO 2001 — All rights reserved

```
ENTITY solid_angle_unit
  SUBTYPE OF (named_unit);
  WHERE
    wr1: ((SELF\named_unit.dimensions.length_exponent = 0) AND (SELF\
          named_unit.dimensions.mass_exponent = 0) AND (SELF\
          named_unit.dimensions.time_exponent = 0) AND (SELF\
          named_unit.dimensions.electric_current_exponent = 0) AND (
          SELF\named_unit.dimensions.
          thermodynamic_temperature_exponent = 0) AND (SELF\named_unit
          .dimensions.amount_of_substance_exponent = 0) AND (SELF\
          named_unit.dimensions.luminous_intensity_exponent = 0));
END_ENTITY; -- solid_angle_unit

ENTITY solid_model
  SUPERTYPE OF (ONEOF (csg_solid,manifold_solid_brep,swept_face_solid,
     swept_area_solid))
  SUBTYPE OF (geometric_representation_item);
END_ENTITY; -- solid_model

ENTITY spacer_fitting_class
  SUBTYPE OF (group);
  WHERE
    wr1: (SIZEOF(QUERY ( aca <* QUERY ( ca <* USEDIN(SELF,
          'PLANT_SPATIAL_CONFIGURATION.CLASSIFICATION_ASSIGNMENT.' +
          'ASSIGNED_CLASS') |

('PLANT_SPATIAL_CONFIGURATION.APPLIED_CLASSIFICATION_ASSIGNMENT'
          IN TYPEOF(ca)) ) | (NOT (SIZEOF(QUERY ( it <* aca.items | (
          NOT (
          'PLANT_SPATIAL_CONFIGURATION.PIPING_COMPONENT_DEFINITION' IN
           TYPEOF(it))) )) = 0)) )) = 0);
    wr2: (SIZEOF(QUERY ( aca <* QUERY ( ca <* USEDIN(SELF,
          'PLANT_SPATIAL_CONFIGURATION.CLASSIFICATION_ASSIGNMENT.' +
          'ASSIGNED_CLASS') |

('PLANT_SPATIAL_CONFIGURATION.APPLIED_CLASSIFICATION_ASSIGNMENT'
          IN TYPEOF(ca)) ) | (NOT (SIZEOF(QUERY ( pcd <*
          QUERY ( it <* aca.items | (
          'PLANT_SPATIAL_CONFIGURATION.PIPING_COMPONENT_DEFINITION' IN
           TYPEOF(it)) ) | (NOT (SIZEOF(QUERY ( aca1 <* USEDIN(pcd.
          formation.of_product,'PLANT_SPATIAL_CONFIGURATION.' +
          'APPLIED_CLASSIFICATION_ASSIGNMENT.ITEMS') | class_in_tree(
          aca1.assigned_class,'spacer') )) = 1)) )) = 0)) )) = 0);
END_ENTITY; -- spacer_fitting_class

ENTITY specialty_item_class
  SUBTYPE OF (group);
END_ENTITY; -- specialty_item_class

ENTITY sphere
  SUBTYPE OF (geometric_representation_item);
    radius : positive_length_measure;
    centre : point;
```

© ISO 2001 — All rights reserved

```
END_ENTITY; -- sphere

ENTITY spherical_surface
  SUBTYPE OF (elementary_surface);
    radius : positive_length_measure;
END_ENTITY; -- spherical_surface

ENTITY stream_design_case
  SUBTYPE OF (property_definition, characterized_object);
  WHERE
    wr1 : (SIZEOF(QUERY ( pd <* USEDIN(SELF,
            'PLANT_SPATIAL_CONFIGURATION.' +
            'PROPERTY_DEFINITION.DEFINITION') | (
            'PLANT_SPATIAL_CONFIGURATION.STREAM_PHASE' IN TYPEOF(pd)) ))
            >= 1);
    wr2 : (SIZEOF(QUERY ( pdr <* USEDIN(SELF,
            'PLANT_SPATIAL_CONFIGURATION.' +
            'PROPERTY_DEFINITION_REPRESENTATION.DEFINITION') | (pdr.
            used_representation.name = 'stream flow characteristics') ))
            = 1);
    wr3 : (SIZEOF(QUERY ( sfc <* QUERY ( pdr <* USEDIN(SELF,
            'PLANT_SPATIAL_CONFIGURATION.' +
            'PROPERTY_DEFINITION_REPRESENTATION.DEFINITION') | (pdr.
            used_representation.name = 'stream flow characteristics') )
             | (NOT (SIZEOF(sfc.used_representation.items) >= 2)) )) =
            0);
    wr4 : (SIZEOF(QUERY ( sfc <* QUERY ( pdr <* USEDIN(SELF,
            'PLANT_SPATIAL_CONFIGURATION.' +
            'PROPERTY_DEFINITION_REPRESENTATION.DEFINITION') | (pdr.
            used_representation.name = 'stream flow characteristics') )
             | (NOT ((1 <= SIZEOF(QUERY ( it <* sfc.used_representation
            .items | ((
            'PLANT_SPATIAL_CONFIGURATION.MEASURE_REPRESENTATION_ITEM'
            IN TYPEOF(it)) AND (it.name IN ['flow rate',
            'minimum flow rate','maximum flow rate'])) ))) AND (SIZEOF(
            QUERY ( it <* sfc.used_representation.items | ((
            'PLANT_SPATIAL_CONFIGURATION.MEASURE_REPRESENTATION_ITEM'
            IN TYPEOF(it)) AND (it.name IN ['flow rate',
            'minimum flow rate','maximum flow rate'])) )) <= 2))) )) =
            0);
    wr5 : (SIZEOF(QUERY ( sfc <* QUERY ( pdr <* USEDIN(SELF,
            'PLANT_SPATIAL_CONFIGURATION.' +
            'PROPERTY_DEFINITION_REPRESENTATION.DEFINITION') | (pdr.
            used_representation.name = 'stream flow characteristics') )
             | (NOT (SIZEOF(QUERY ( it <* sfc.used_representation.items
             | ((
            'PLANT_SPATIAL_CONFIGURATION.MEASURE_REPRESENTATION_ITEM'
            IN TYPEOF(it)) AND (it.name = 'flow rate')) )) <= 1)) )) =
            0);
    wr6 : (SIZEOF(QUERY ( sfc <* QUERY ( pdr <* USEDIN(SELF,
            'PLANT_SPATIAL_CONFIGURATION.' +
```

 © ISO 2001 — All rights reserved

```
        'PROPERTY_DEFINITION_REPRESENTATION.DEFINITION') | (pdr.
        used_representation.name = 'stream flow characteristics') )
         | (NOT (SIZEOF(QUERY ( it <* sfc.used_representation.items
         | ((
        'PLANT_SPATIAL_CONFIGURATION.MEASURE_REPRESENTATION_ITEM'
        IN TYPEOF(it)) AND (it.name = 'minimum flow rate')) )) <= 1)) ))
        = 0);
wr7 : (SIZEOF(QUERY ( sfc <* QUERY ( pdr <* USEDIN(SELF,
        'PLANT_SPATIAL_CONFIGURATION.' +
        'PROPERTY_DEFINITION_REPRESENTATION.DEFINITION') | (pdr.
        used_representation.name = 'stream flow characteristics') )
         | (NOT (SIZEOF(QUERY ( it <* sfc.used_representation.items
         | ((
        'PLANT_SPATIAL_CONFIGURATION.MEASURE_REPRESENTATION_ITEM'
        IN TYPEOF(it)) AND (it.name = 'maximum flow rate')) )) <= 1)) ))
        = 0);
wr8 : (SIZEOF(QUERY ( sfc <* QUERY ( pdr <* USEDIN(SELF,
        'PLANT_SPATIAL_CONFIGURATION.' +
        'PROPERTY_DEFINITION_REPRESENTATION.DEFINITION') | (pdr.
        used_representation.name = 'stream flow characteristics') )
         | (NOT ((1 <= SIZEOF(QUERY ( it <* sfc.used_representation
        .items | ((
        'PLANT_SPATIAL_CONFIGURATION.MEASURE_REPRESENTATION_ITEM'
        IN TYPEOF(it)) AND (it.name IN ['pressure',
        'minimum pressure','maximum pressure'])) ))) AND (SIZEOF(
        QUERY ( it <* sfc.used_representation.items | ((
        'PLANT_SPATIAL_CONFIGURATION.MEASURE_REPRESENTATION_ITEM'
        IN TYPEOF(it)) AND (it.name IN ['pressure',
        'minimum pressure','maximum pressure'])) )) <= 2))) )) = 0);
wr9 : (SIZEOF(QUERY ( sfc <* QUERY ( pdr <* USEDIN(SELF,
        'PLANT_SPATIAL_CONFIGURATION.' +
        'PROPERTY_DEFINITION_REPRESENTATION.DEFINITION') | (pdr.
        used_representation.name = 'stream flow characteristics') )
         | (NOT (SIZEOF(QUERY ( it <* sfc.used_representation.items
         | ((
        'PLANT_SPATIAL_CONFIGURATION.MEASURE_REPRESENTATION_ITEM'
        IN TYPEOF(it)) AND (it.name = 'pressure')) )) <= 1)) )) = 0);
wr10: (SIZEOF(QUERY ( sfc <* QUERY ( pdr <* USEDIN(SELF,
        'PLANT_SPATIAL_CONFIGURATION.' +
        'PROPERTY_DEFINITION_REPRESENTATION.DEFINITION') | (pdr.
        used_representation.name = 'stream flow characteristics') )
         | (NOT (SIZEOF(QUERY ( it <* sfc.used_representation.items
         | ((
        'PLANT_SPATIAL_CONFIGURATION.MEASURE_REPRESENTATION_ITEM'
        IN TYPEOF(it)) AND (it.name = 'minimum pressure')) )) <= 1)) ))
        = 0);
wr11: (SIZEOF(QUERY ( sfc <* QUERY ( pdr <* USEDIN(SELF,
        'PLANT_SPATIAL_CONFIGURATION.' +
        'PROPERTY_DEFINITION_REPRESENTATION.DEFINITION') | (pdr.
        used_representation.name = 'stream flow characteristics') )
         | (NOT (SIZEOF(QUERY ( it <* sfc.used_representation.items
         | ((
        'PLANT_SPATIAL_CONFIGURATION.MEASURE_REPRESENTATION_ITEM'
        IN TYPEOF(it)) AND (it.name = 'maximum pressure')) )) <= 1)) ))
```

© ISO 2001 — All rights reserved

```
        = 0);
    wr12: (SIZEOF(QUERY ( sfc <* QUERY ( pdr <* USEDIN(SELF,
        'PLANT_SPATIAL_CONFIGURATION.' +
        'PROPERTY_DEFINITION_REPRESENTATION.DEFINITION') | (pdr.
        used_representation.name = 'stream flow characteristics') ) |
        (NOT (SIZEOF(QUERY ( it <* sfc.used_representation.items |

(('PLANT_SPATIAL_CONFIGURATION.DESCRIPTIVE_REPRESENTATION_ITEM'
        IN TYPEOF(it)) AND (it.name = 'stream data reference')) ))
        <= 1)) )) = 0);
    wr13: ((NOT (SIZEOF(QUERY ( pdr <* USEDIN(SELF,
        'PLANT_SPATIAL_CONFIGURATION.' +

'PROPERTY_DEFINITION_RELATIONSHIP.RELATING_PROPERTY_DEFINITION')
        | (pdr.related_property_definition.name =
        'service characteristics') )) >= 1)) OR (SIZEOF(
        QUERY ( sc <* QUERY ( pdr <* USEDIN(SELF,
        'PLANT_SPATIAL_CONFIGURATION.' +

'PROPERTY_DEFINITION_RELATIONSHIP.RELATING_PROPERTY_DEFINITION')
        | (pdr.related_property_definition.name =
        'service characteristics') ) | (NOT (SIZEOF(QUERY ( pdr <*
        USEDIN(sc.related_property_definition,
        'PLANT_SPATIAL_CONFIGURATION.' +
        'PROPERTY_DEFINITION_REPRESENTATION.DEFINITION') | (pdr.
        used_representation.name =
        'service operating characteristics') )) = 1)) )) = 0));
    wr14: ((NOT (SIZEOF(QUERY ( pdr <* USEDIN(SELF,
        'PLANT_SPATIAL_CONFIGURATION.' +

'PROPERTY_DEFINITION_RELATIONSHIP.RELATING_PROPERTY_DEFINITION')
        | (pdr.related_property_definition.name =
        'service characteristics') )) >= 1)) OR (SIZEOF(
        QUERY ( sc <* QUERY ( pdr <* USEDIN(SELF,
        'PLANT_SPATIAL_CONFIGURATION.' +

'PROPERTY_DEFINITION_RELATIONSHIP.RELATING_PROPERTY_DEFINITION')
        | (pdr.related_property_definition.name =
        'service characteristics') ) | (NOT (SIZEOF(QUERY ( soc <*
        QUERY ( pdr <* USEDIN(sc.related_property_definition,
        'PLANT_SPATIAL_CONFIGURATION.' +
        'PROPERTY_DEFINITION_REPRESENTATION.DEFINITION') | (pdr.
        used_representation.name =
        'service operating characteristics') ) | (NOT (SIZEOF(soc.
        used_representation.items) >= 3)) )) = 0)) )) = 0));
    wr15: ((NOT (SIZEOF(QUERY ( pdr <* USEDIN(SELF,
        'PLANT_SPATIAL_CONFIGURATION.' +

'PROPERTY_DEFINITION_RELATIONSHIP.RELATING_PROPERTY_DEFINITION')
        | (pdr.related_property_definition.name =
        'service characteristics') )) >= 1)) OR (SIZEOF(
```

 © ISO 2001 — All rights reserved

```
        QUERY ( sc <* QUERY ( pdr <* USEDIN(SELF,
        'PLANT_SPATIAL_CONFIGURATION.' +

'PROPERTY_DEFINITION_RELATIONSHIP.RELATING_PROPERTY_DEFINITION')
        | (pdr.related_property_definition.name =
        'service characteristics') ) | (NOT (SIZEOF(QUERY ( soc <*
        QUERY ( pdr <* USEDIN(sc.related_property_definition,
        'PLANT_SPATIAL_CONFIGURATION.' +
        'PROPERTY_DEFINITION_REPRESENTATION.DEFINITION') | (pdr.
        used_representation.name =
        'service operating characteristics') ) | ((1 <= SIZEOF(
        QUERY ( it <* soc.used_representation.items | ((SIZEOF(
        TYPEOF(it) * [
        'PLANT_SPATIAL_CONFIGURATION.MEASURE_REPRESENTATION_ITEM',
        'PLANT_SPATIAL_CONFIGURATION.' +
        'THERMODYNAMIC_TEMPERATURE_MEASURE_WITH_UNIT']) = 2) AND (
        it.name IN ['temperature','minimum temperature',
        'maximum temperature'])) ))) AND (SIZEOF(QUERY ( it <* soc.
        used_representation.items | ((SIZEOF(TYPEOF(it) * [
        'PLANT_SPATIAL_CONFIGURATION.MEASURE_REPRESENTATION_ITEM',
        'PLANT_SPATIAL_CONFIGURATION.' +
        'THERMODYNAMIC_TEMPERATURE_MEASURE_WITH_UNIT']) = 2) AND (
        it.name IN ['temperature','minimum temperature',
        'maximum temperature'])) )) <= 2)) )) = 1)) )) = 0));
    wr16: ((NOT (SIZEOF(QUERY ( pdr <* USEDIN(SELF,
        'PLANT_SPATIAL_CONFIGURATION.' +

'PROPERTY_DEFINITION_RELATIONSHIP.RELATING_PROPERTY_DEFINITION')
        | (pdr.related_property_definition.name =
        'service characteristics') )) >= 1)) OR (SIZEOF(
        QUERY ( sc <* QUERY ( pdr <* USEDIN(SELF,
        'PLANT_SPATIAL_CONFIGURATION.' +

'PROPERTY_DEFINITION_RELATIONSHIP.RELATING_PROPERTY_DEFINITION')
        | (pdr.related_property_definition.name =
        'service characteristics') ) | (NOT (SIZEOF(QUERY ( soc <*
        QUERY ( pdr <* USEDIN(sc.related_property_definition,
        'PLANT_SPATIAL_CONFIGURATION.' +
        'PROPERTY_DEFINITION_REPRESENTATION.DEFINITION') | (pdr.
        used_representation.name =
        'service operating characteristics') ) | (SIZEOF(
        QUERY ( it <* soc.used_representation.items | ((SIZEOF(
        TYPEOF(it) * [
        'PLANT_SPATIAL_CONFIGURATION.MEASURE_REPRESENTATION_ITEM',
        'PLANT_SPATIAL_CONFIGURATION.' +
        'THERMODYNAMIC_TEMPERATURE_MEASURE_WITH_UNIT']) = 2) AND (
        it.name = 'temperature')) )) <= 1) )) = 1)) )) = 0));
    wr17: ((NOT (SIZEOF(QUERY ( pdr <* USEDIN(SELF,
        'PLANT_SPATIAL_CONFIGURATION.' +

'PROPERTY_DEFINITION_RELATIONSHIP.RELATING_PROPERTY_DEFINITION')
        | (pdr.related_property_definition.name =
        'service characteristics') )) >= 1)) OR (SIZEOF(
        QUERY ( sc <* QUERY ( pdr <* USEDIN(SELF,
```

© ISO 2001 — All rights reserved

```
            'PLANT_SPATIAL_CONFIGURATION.' +

'PROPERTY_DEFINITION_RELATIONSHIP.RELATING_PROPERTY_DEFINITION')
            | (pdr.related_property_definition.name =
            'service characteristics') ) | (NOT (SIZEOF(QUERY ( soc <*
            QUERY ( pdr <* USEDIN(sc.related_property_definition,
            'PLANT_SPATIAL_CONFIGURATION.' +
            'PROPERTY_DEFINITION_REPRESENTATION.DEFINITION') | (pdr.
            used_representation.name =
            'service operating characteristics') ) | (SIZEOF(
            QUERY ( it <* soc.used_representation.items | ((SIZEOF(
            TYPEOF(it) * [
            'PLANT_SPATIAL_CONFIGURATION.MEASURE_REPRESENTATION_ITEM',
            'PLANT_SPATIAL_CONFIGURATION.' +
            'THERMODYNAMIC_TEMPERATURE_MEASURE_WITH_UNIT']) = 2) AND (
            it.name = 'minimum temperature')) )) <= 1) )) = 1)) )) = 0));
    wr18: ((NOT (SIZEOF(QUERY ( pdr <* USEDIN(SELF,
            'PLANT_SPATIAL_CONFIGURATION.' +

'PROPERTY_DEFINITION_RELATIONSHIP.RELATING_PROPERTY_DEFINITION')
            | (pdr.related_property_definition.name =
            'service characteristics') )) >= 1)) OR (SIZEOF(
            QUERY ( sc <* QUERY ( pdr <* USEDIN(SELF,
            'PLANT_SPATIAL_CONFIGURATION.' +

'PROPERTY_DEFINITION_RELATIONSHIP.RELATING_PROPERTY_DEFINITION')
            | (pdr.related_property_definition.name =
            'service characteristics') ) | (NOT (SIZEOF(QUERY ( soc <*
            QUERY ( pdr <* USEDIN(sc.related_property_definition,
            'PLANT_SPATIAL_CONFIGURATION.' +
            'PROPERTY_DEFINITION_REPRESENTATION.DEFINITION') | (pdr.
            used_representation.name =
            'service operating characteristics') ) | (SIZEOF(
            QUERY ( it <* soc.used_representation.items | ((SIZEOF(
            TYPEOF(it) * [
            'PLANT_SPATIAL_CONFIGURATION.MEASURE_REPRESENTATION_ITEM',
            'PLANT_SPATIAL_CONFIGURATION.' +
            'THERMODYNAMIC_TEMPERATURE_MEASURE_WITH_UNIT']) = 2) AND (
            it.name = 'maximum temperature')) )) <= 1) )) = 1)) )) = 0));
    wr19: ((NOT (SIZEOF(QUERY ( pdr <* USEDIN(SELF,
            'PLANT_SPATIAL_CONFIGURATION.' +

'PROPERTY_DEFINITION_RELATIONSHIP.RELATING_PROPERTY_DEFINITION')
            | (pdr.related_property_definition.name =
            'service characteristics') )) >= 1)) OR (SIZEOF(
            QUERY ( sc <* QUERY ( pdr <* USEDIN(SELF,
            'PLANT_SPATIAL_CONFIGURATION.' +

'PROPERTY_DEFINITION_RELATIONSHIP.RELATING_PROPERTY_DEFINITION')
            | (pdr.related_property_definition.name =
            'service characteristics') ) | (NOT (SIZEOF(QUERY ( soc <*
```

 © ISO 2001 — All rights reserved

```
        QUERY ( pdr <* USEDIN(sc.related_property_definition,
        'PLANT_SPATIAL_CONFIGURATION.' +
        'PROPERTY_DEFINITION_REPRESENTATION.DEFINITION') | (pdr.
        used_representation.name =
        'service operating characteristics') ) | ((1 <= SIZEOF(
        QUERY ( it <* soc.used_representation.items | ((
        'PLANT_SPATIAL_CONFIGURATION.MEASURE_REPRESENTATION_ITEM'
        IN TYPEOF(it)) AND (it.name IN ['pressure',
        'minimum pressure','maximum pressure'])) ))) AND (SIZEOF(
        QUERY ( it <* soc.used_representation.items | ((
        'PLANT_SPATIAL_CONFIGURATION.MEASURE_REPRESENTATION_ITEM'
        IN TYPEOF(it)) AND (it.name IN ['pressure',
        'minimum pressure','maximum pressure'])) )) <= 2)) )) = 1)) ))
        = 0));
    wr20: ((NOT (SIZEOF(QUERY ( pdr <* USEDIN(SELF,
        'PLANT_SPATIAL_CONFIGURATION.' +

'PROPERTY_DEFINITION_RELATIONSHIP.RELATING_PROPERTY_DEFINITION')
        | (pdr.related_property_definition.name =
        'service characteristics') )) >= 1)) OR (SIZEOF(
        QUERY ( sc <* QUERY ( pdr <* USEDIN(SELF,
        'PLANT_SPATIAL_CONFIGURATION.' +

'PROPERTY_DEFINITION_RELATIONSHIP.RELATING_PROPERTY_DEFINITION')
        | (pdr.related_property_definition.name =
        'service characteristics') ) | (NOT (SIZEOF(QUERY ( soc <*
        QUERY ( pdr <* USEDIN(sc.related_property_definition,
        'PLANT_SPATIAL_CONFIGURATION.' +
        'PROPERTY_DEFINITION_REPRESENTATION.DEFINITION') | (pdr.
        used_representation.name =
        'service operating characteristics') ) | (SIZEOF(
        QUERY ( it <* soc.used_representation.items | ((
        'PLANT_SPATIAL_CONFIGURATION.MEASURE_REPRESENTATION_ITEM'
        IN TYPEOF(it)) AND (it.name = 'pressure')) )) <= 1) )) = 1)) ))
        = 0));
    wr21: ((NOT (SIZEOF(QUERY ( pdr <* USEDIN(SELF,
        'PLANT_SPATIAL_CONFIGURATION.' +

'PROPERTY_DEFINITION_RELATIONSHIP.RELATING_PROPERTY_DEFINITION')
        | (pdr.related_property_definition.name =
        'service characteristics') )) >= 1)) OR (SIZEOF(
        QUERY ( sc <* QUERY ( pdr <* USEDIN(SELF,
        'PLANT_SPATIAL_CONFIGURATION.' +

'PROPERTY_DEFINITION_RELATIONSHIP.RELATING_PROPERTY_DEFINITION')
        | (pdr.related_property_definition.name =
        'service characteristics') ) | (NOT (SIZEOF(QUERY ( soc <*
        QUERY ( pdr <* USEDIN(sc.related_property_definition,
        'PLANT_SPATIAL_CONFIGURATION.' +
        'PROPERTY_DEFINITION_REPRESENTATION.DEFINITION') | (pdr.
        used_representation.name =
        'service operating characteristics') ) | (SIZEOF(
        QUERY ( it <* soc.used_representation.items | ((
        'PLANT_SPATIAL_CONFIGURATION.MEASURE_REPRESENTATION_ITEM'
```

© ISO 2001 — All rights reserved

```
        IN TYPEOF(it)) AND (it.name = 'minimum pressure')) )) <= 1) ))
        = 1)) )) = 0));
    wr22: ((NOT (SIZEOF(QUERY ( pdr <* USEDIN(SELF,
        'PLANT_SPATIAL_CONFIGURATION.' +

'PROPERTY_DEFINITION_RELATIONSHIP.RELATING_PROPERTY_DEFINITION')
        | (pdr.related_property_definition.name =
        'service characteristics') )) >= 1)) OR (SIZEOF(
        QUERY ( sc <* QUERY ( pdr <* USEDIN(SELF,
        'PLANT_SPATIAL_CONFIGURATION.' +

'PROPERTY_DEFINITION_RELATIONSHIP.RELATING_PROPERTY_DEFINITION')
        | (pdr.related_property_definition.name =
        'service characteristics') ) | (NOT (SIZEOF(QUERY ( soc <*
        QUERY ( pdr <* USEDIN(sc.related_property_definition,
        'PLANT_SPATIAL_CONFIGURATION.' +
        'PROPERTY_DEFINITION_REPRESENTATION.DEFINITION') | (pdr.
        used_representation.name =
        'service operating characteristics') ) | (SIZEOF(
        QUERY ( it <* soc.used_representation.items | ((
        'PLANT_SPATIAL_CONFIGURATION.MEASURE_REPRESENTATION_ITEM'
        IN TYPEOF(it)) AND (it.name = 'maximum pressure')) )) <= 1) ))
        = 1)) )) = 0));
    wr23: ((NOT (SIZEOF(QUERY ( pdr <* USEDIN(SELF,
        'PLANT_SPATIAL_CONFIGURATION.' +

'PROPERTY_DEFINITION_RELATIONSHIP.RELATING_PROPERTY_DEFINITION')
        | (pdr.related_property_definition.name =
        'service characteristics') )) >= 1)) OR (SIZEOF(
        QUERY ( sc <* QUERY ( pdr <* USEDIN(SELF,
        'PLANT_SPATIAL_CONFIGURATION.' +

'PROPERTY_DEFINITION_RELATIONSHIP.RELATING_PROPERTY_DEFINITION')
        | (pdr.related_property_definition.name =
        'service characteristics') ) | (NOT (SIZEOF(QUERY ( soc <*
        QUERY ( pdr <* USEDIN(sc.related_property_definition,
        'PLANT_SPATIAL_CONFIGURATION.' +
        'PROPERTY_DEFINITION_REPRESENTATION.DEFINITION') | (pdr.
        used_representation.name =
        'service operating characteristics') ) | ((1 <= SIZEOF(
        QUERY ( it <* soc.used_representation.items | ((SIZEOF(
        TYPEOF(it) * [
        'PLANT_SPATIAL_CONFIGURATION.MEASURE_REPRESENTATION_ITEM',
        'PLANT_SPATIAL_CONFIGURATION.TIME_MEASURE_WITH_UNIT']) = 2)
        AND (it.name IN ['duration','minimum duration',
        'maximum duration'])) ))) AND (SIZEOF(QUERY ( it <* soc.
        used_representation.items | ((SIZEOF(TYPEOF(it) * [
        'PLANT_SPATIAL_CONFIGURATION.MEASURE_REPRESENTATION_ITEM',
        'PLANT_SPATIAL_CONFIGURATION.TIME_MEASURE_WITH_UNIT']) = 2)
        AND (it.name IN ['duration','minimum duration',
        'maximum duration'])) )) <= 2)) )) = 1)) )) = 0));
```

 © ISO 2001 — All rights reserved

```
    wr24: ((NOT (SIZEOF(QUERY ( pdr <* USEDIN(SELF,
          'PLANT_SPATIAL_CONFIGURATION.' +

'PROPERTY_DEFINITION_RELATIONSHIP.RELATING_PROPERTY_DEFINITION')
          | (pdr.related_property_definition.name =
          'service characteristics') )) >= 1)) OR (SIZEOF(
          QUERY ( sc <* QUERY ( pdr <* USEDIN(SELF,
          'PLANT_SPATIAL_CONFIGURATION.' +

'PROPERTY_DEFINITION_RELATIONSHIP.RELATING_PROPERTY_DEFINITION')
          | (pdr.related_property_definition.name =
          'service characteristics') ) | (NOT (SIZEOF(QUERY ( soc <*
          QUERY ( pdr <* USEDIN(sc.related_property_definition,
          'PLANT_SPATIAL_CONFIGURATION.' +
          'PROPERTY_DEFINITION_REPRESENTATION.DEFINITION') | (pdr.
          used_representation.name =
          'service operating characteristics') ) | (SIZEOF(
          QUERY ( it <* soc.used_representation.items | ((SIZEOF(
          TYPEOF(it) * [
          'PLANT_SPATIAL_CONFIGURATION.MEASURE_REPRESENTATION_ITEM',
          'PLANT_SPATIAL_CONFIGURATION.TIME_MEASURE_WITH_UNIT']) = 2)
          AND (it.name = 'duration')) )) <= 1) )) = 1)) )) = 0));
    wr25: ((NOT (SIZEOF(QUERY ( pdr <* USEDIN(SELF,
          'PLANT_SPATIAL_CONFIGURATION.' +

'PROPERTY_DEFINITION_RELATIONSHIP.RELATING_PROPERTY_DEFINITION')
          | (pdr.related_property_definition.name =
          'service characteristics') )) >= 1)) OR (SIZEOF(
          QUERY ( sc <* QUERY ( pdr <* USEDIN(SELF,
          'PLANT_SPATIAL_CONFIGURATION.' +

'PROPERTY_DEFINITION_RELATIONSHIP.RELATING_PROPERTY_DEFINITION')
          | (pdr.related_property_definition.name =
          'service characteristics') ) | (NOT (SIZEOF(QUERY ( soc <*
          QUERY ( pdr <* USEDIN(sc.related_property_definition,
          'PLANT_SPATIAL_CONFIGURATION.' +
          'PROPERTY_DEFINITION_REPRESENTATION.DEFINITION') | (pdr.
          used_representation.name =
          'service operating characteristics') ) | (SIZEOF(
          QUERY ( it <* soc.used_representation.items | ((SIZEOF(
          TYPEOF(it) * [
          'PLANT_SPATIAL_CONFIGURATION.MEASURE_REPRESENTATION_ITEM',
          'PLANT_SPATIAL_CONFIGURATION.TIME_MEASURE_WITH_UNIT']) = 2)
          AND (it.name = 'minimum duration')) )) <= 1) )) = 1)) )) =
          0));
    wr26: ((NOT (SIZEOF(QUERY ( pdr <* USEDIN(SELF,
          'PLANT_SPATIAL_CONFIGURATION.' +

'PROPERTY_DEFINITION_RELATIONSHIP.RELATING_PROPERTY_DEFINITION')
          | (pdr.related_property_definition.name =
          'service characteristics') )) >= 1)) OR (SIZEOF(
          QUERY ( sc <* QUERY ( pdr <* USEDIN(SELF,
          'PLANT_SPATIAL_CONFIGURATION.' +
```

© ISO 2001 — All rights reserved

```
'PROPERTY_DEFINITION_RELATIONSHIP.RELATING_PROPERTY_DEFINITION')
            | (pdr.related_property_definition.name =
            'service characteristics') ) | (NOT (SIZEOF(QUERY ( soc <*
            QUERY ( pdr <* USEDIN(sc.related_property_definition,
            'PLANT_SPATIAL_CONFIGURATION.' +
            'PROPERTY_DEFINITION_REPRESENTATION.DEFINITION') | (pdr.
            used_representation.name =
            'service operating characteristics') ) | (SIZEOF(
            QUERY ( it <* soc.used_representation.items | ((SIZEOF(
            TYPEOF(it) * [
            'PLANT_SPATIAL_CONFIGURATION.MEASURE_REPRESENTATION_ITEM',
            'PLANT_SPATIAL_CONFIGURATION.TIME_MEASURE_WITH_UNIT']) = 2)
            AND (it.name = 'maximum duration')) )) <= 1) )) = 1)) )) =
            0));
    wr27: ((NOT (SIZEOF(QUERY ( pdr <* USEDIN(SELF,
            'PLANT_SPATIAL_CONFIGURATION.' +

'PROPERTY_DEFINITION_RELATIONSHIP.RELATING_PROPERTY_DEFINITION')
            | (pdr.related_property_definition.name =
            'service characteristics') )) >= 1)) OR (SIZEOF(
            QUERY ( sc <* QUERY ( pdr <* USEDIN(SELF,
            'PLANT_SPATIAL_CONFIGURATION.' +

'PROPERTY_DEFINITION_RELATIONSHIP.RELATING_PROPERTY_DEFINITION')
            | (pdr.related_property_definition.name =
            'service characteristics') ) | (NOT (
            'PLANT_SPATIAL_CONFIGURATION.PLANT_ITEM_CONNECTOR' IN
            TYPEOF(sc.related_property_definition.definition))) )) = 0));
 END_ENTITY; -- stream_design_case

 ENTITY stream_phase
  SUBTYPE OF (property_definition);
  WHERE
    wr1 : ('PLANT_SPATIAL_CONFIGURATION.STREAM_DESIGN_CASE' IN TYPEOF(
            SELF.definition));
    wr2 : (SIZEOF(QUERY ( pdr <* USEDIN(SELF,
            'PLANT_SPATIAL_CONFIGURATION.' +
            'PROPERTY_DEFINITION_REPRESENTATION.DEFINITION') | (pdr.
            used_representation.name = 'stream phase characteristics') ))
            = 1);
    wr3 : (SIZEOF(QUERY ( spc <* QUERY ( pdr <* USEDIN(SELF,
            'PLANT_SPATIAL_CONFIGURATION.' +
            'PROPERTY_DEFINITION_REPRESENTATION.DEFINITION') | (pdr.
            used_representation.name = 'stream phase characteristics') )
             | (NOT (SIZEOF(spc.used_representation.items) >= 5)) )) =
            0);
    wr4 : (SIZEOF(QUERY ( spc <* QUERY ( pdr <* USEDIN(SELF,
            'PLANT_SPATIAL_CONFIGURATION.' +
            'PROPERTY_DEFINITION_REPRESENTATION.DEFINITION') | (pdr.
            used_representation.name = 'stream phase characteristics') )
```

 © ISO 2001 — All rights reserved

```
        | (NOT (SIZEOF(QUERY ( it <* spc.used_representation.items
        | ((SIZEOF(TYPEOF(it) * [
        'PLANT_SPATIAL_CONFIGURATION.MEASURE_REPRESENTATION_ITEM',
        'PLANT_SPATIAL_CONFIGURATION.RATIO_MEASURE_WITH_UNIT']) = 2)
        AND (it.name = 'constituent mole fraction')) )) = 1)) )) =
        0);
    wr5 : (SIZEOF(QUERY ( spc <* QUERY ( pdr <* USEDIN(SELF,
        'PLANT_SPATIAL_CONFIGURATION.' +
        'PROPERTY_DEFINITION_REPRESENTATION.DEFINITION') | (pdr.
        used_representation.name = 'stream phase characteristics') )
        | (NOT (SIZEOF(QUERY ( it <* spc.used_representation.items |

(('PLANT_SPATIAL_CONFIGURATION.DESCRIPTIVE_REPRESENTATION_ITEM'
        IN TYPEOF(it)) AND (it.name = 'constituents')) )) = 1)) ))
        = 0);
    wr6 : (SIZEOF(QUERY ( spc <* QUERY ( pdr <* USEDIN(SELF,
        'PLANT_SPATIAL_CONFIGURATION.' +
        'PROPERTY_DEFINITION_REPRESENTATION.DEFINITION') | (pdr.
        used_representation.name = 'stream phase characteristics') )
        | (NOT (SIZEOF(QUERY ( it <* spc.used_representation.items
        | ((
        'PLANT_SPATIAL_CONFIGURATION.MEASURE_REPRESENTATION_ITEM'
        IN TYPEOF(it)) AND (it.name = 'phase density')) )) = 1)) ))
        = 0);
    wr7 : (SIZEOF(QUERY ( spc <* QUERY ( pdr <* USEDIN(SELF,
        'PLANT_SPATIAL_CONFIGURATION.' +
        'PROPERTY_DEFINITION_REPRESENTATION.DEFINITION') | (pdr.
        used_representation.name = 'stream phase characteristics') )
        | (NOT (SIZEOF(QUERY ( it <* spc.used_representation.items
        | ((SIZEOF(TYPEOF(it) * [
        'PLANT_SPATIAL_CONFIGURATION.MEASURE_REPRESENTATION_ITEM',
        'PLANT_SPATIAL_CONFIGURATION.RATIO_MEASURE_WITH_UNIT']) = 2)
        AND (it.name = 'phase fraction')) )) = 1)) )) = 0);
    wr8 : (SIZEOF(QUERY ( spc <* QUERY ( pdr <* USEDIN(SELF,
        'PLANT_SPATIAL_CONFIGURATION.' +
        'PROPERTY_DEFINITION_REPRESENTATION.DEFINITION') | (pdr.
        used_representation.name = 'stream phase characteristics') )
        | (NOT ((1 <= SIZEOF(QUERY ( it <* spc.used_representation
        .items | ((SIZEOF(TYPEOF(it) * [
        'PLANT_SPATIAL_CONFIGURATION.MEASURE_REPRESENTATION_ITEM',
        'PLANT_SPATIAL_CONFIGURATION.' +
        'THERMODYNAMIC_TEMPERATURE_MEASURE_WITH_UNIT']) = 2) AND (
        it.name IN ['temperature','minimum temperature',
        'maximum temperature'])) ))) AND (SIZEOF(QUERY ( it <* spc.
        used_representation.items | ((SIZEOF(TYPEOF(it) * [
        'PLANT_SPATIAL_CONFIGURATION.MEASURE_REPRESENTATION_ITEM',
        'PLANT_SPATIAL_CONFIGURATION.' +
        'THERMODYNAMIC_TEMPERATURE_MEASURE_WITH_UNIT']) = 2) AND (
        it.name IN ['temperature','minimum temperature',
        'maximum temperature'])) )) <= 2))) )) = 0);
    wr9 : (SIZEOF(QUERY ( spc <* QUERY ( pdr <* USEDIN(SELF,
        'PLANT_SPATIAL_CONFIGURATION.' +
        'PROPERTY_DEFINITION_REPRESENTATION.DEFINITION') | (pdr.
        used_representation.name = 'stream phase characteristics') )
```

© ISO 2001 — All rights reserved

```
        | (NOT (SIZEOF(QUERY ( it <* spc.used_representation.items
        | ((SIZEOF(TYPEOF(it) * [
        'PLANT_SPATIAL_CONFIGURATION.MEASURE_REPRESENTATION_ITEM',
        'PLANT_SPATIAL_CONFIGURATION.' +
        'THERMODYNAMIC_TEMPERATURE_MEASURE_WITH_UNIT']) = 2) AND (
        it.name = 'temperature')) )) <= 1)) )) = 0);
wr10: (SIZEOF(QUERY ( spc <* QUERY ( pdr <* USEDIN(SELF,
        'PLANT_SPATIAL_CONFIGURATION.' +
        'PROPERTY_DEFINITION_REPRESENTATION.DEFINITION') | (pdr.
        used_representation.name = 'stream phase characteristics') )
        | (NOT (SIZEOF(QUERY ( it <* spc.used_representation.items
        | ((SIZEOF(TYPEOF(it) * [
        'PLANT_SPATIAL_CONFIGURATION.MEASURE_REPRESENTATION_ITEM',
        'PLANT_SPATIAL_CONFIGURATION.' +
        'THERMODYNAMIC_TEMPERATURE_MEASURE_WITH_UNIT']) = 2) AND (
        it.name = 'minimum temperature')) )) <= 1)) )) = 0);
wr11: (SIZEOF(QUERY ( spc <* QUERY ( pdr <* USEDIN(SELF,
        'PLANT_SPATIAL_CONFIGURATION.' +
        'PROPERTY_DEFINITION_REPRESENTATION.DEFINITION') | (pdr.
        used_representation.name = 'stream phase characteristics') )
        | (NOT (SIZEOF(QUERY ( it <* spc.used_representation.items
        | ((SIZEOF(TYPEOF(it) * [
        'PLANT_SPATIAL_CONFIGURATION.MEASURE_REPRESENTATION_ITEM',
        'PLANT_SPATIAL_CONFIGURATION.' +
        'THERMODYNAMIC_TEMPERATURE_MEASURE_WITH_UNIT']) = 2) AND (
        it.name = 'maximum temperature')) )) <= 1)) )) = 0);
wr12: (SIZEOF(QUERY ( spc <* QUERY ( pdr <* USEDIN(SELF,
        'PLANT_SPATIAL_CONFIGURATION.' +
        'PROPERTY_DEFINITION_REPRESENTATION.DEFINITION') | (pdr.
        used_representation.name = 'stream phase characteristics') )
        | (NOT (SIZEOF(QUERY ( it <* spc.used_representation.items
        | ((
        'PLANT_SPATIAL_CONFIGURATION.MEASURE_REPRESENTATION_ITEM'
        IN TYPEOF(it)) AND (it.name = 'specific gravity')) )) <= 1)) ))
        = 0);
wr13: (SIZEOF(QUERY ( spc <* QUERY ( pdr <* USEDIN(SELF,
        'PLANT_SPATIAL_CONFIGURATION.' +
        'PROPERTY_DEFINITION_REPRESENTATION.DEFINITION') | (pdr.
        used_representation.name = 'stream phase characteristics') )
        | (NOT (SIZEOF(QUERY ( it <* spc.used_representation.items
        | ((
        'PLANT_SPATIAL_CONFIGURATION.MEASURE_REPRESENTATION_ITEM'
        IN TYPEOF(it)) AND (it.name = 'surface tension')) )) <= 1)) ))
        = 0);
wr14: (SIZEOF(QUERY ( spc <* QUERY ( pdr <* USEDIN(SELF,
        'PLANT_SPATIAL_CONFIGURATION.' +
        'PROPERTY_DEFINITION_REPRESENTATION.DEFINITION') | (pdr.
        used_representation.name = 'stream phase characteristics') )
        | (NOT (SIZEOF(QUERY ( it <* spc.used_representation.items
        | ((
        'PLANT_SPATIAL_CONFIGURATION.MEASURE_REPRESENTATION_ITEM'
```

 © ISO 2001 — All rights reserved

```
            IN TYPEOF(it)) AND (it.name = 'viscosity')) )) <= 1)) )) =
            0);
  END_ENTITY; -- stream_phase

  ENTITY structural_load_connector_class
    SUBTYPE OF (group);
  END_ENTITY; -- structural_load_connector_class

  ENTITY structural_system
    SUBTYPE OF (product_definition);
    WHERE
      wr1: (SIZEOF(QUERY ( pdr <* USEDIN(SELF,
            'PLANT_SPATIAL_CONFIGURATION.' +
'PRODUCT_DEFINITION_RELATIONSHIP.RELATED_PRODUCT_DEFINITION')
            | (('PLANT_SPATIAL_CONFIGURATION.PLANT' IN TYPEOF(pdr.
            relating_product_definition.formation.of_product)) AND (pdr.
            relating_product_definition.frame_of_reference.name =
            'functional occurrence')) )) = 1);
  END_ENTITY; -- structural_system

  ENTITY support_constraint_representation
    SUBTYPE OF (representation);
    WHERE
      wr1: (SIZEOF(SELF.items) >= 3);
      wr2: (SIZEOF(QUERY ( it <* SELF.items | ((
            'PLANT_SPATIAL_CONFIGURATION.MEASURE_REPRESENTATION_ITEM' IN
             TYPEOF(it)) AND (it.name IN ['negative x','positive x',
            'negative y','positive y','negative z','positive z',
            'negative x rotation','positive x rotation',
            'negative y rotation','positive y rotation',
            'negative z rotation','positive z rotation']) )) = 1);
      wr3: (SIZEOF(QUERY ( it <* SELF.items | (
            'PLANT_SPATIAL_CONFIGURATION.RATIO_MEASURE_WITH_UNIT' IN
            TYPEOF(it)) )) = 1);
      wr4: (SIZEOF(QUERY ( it <* SELF.items |

('PLANT_SPATIAL_CONFIGURATION.DESCRIPTIVE_REPRESENTATION_ITEM'
            IN TYPEOF(it)) )) = 1);
  END_ENTITY; -- support_constraint_representation

  ENTITY surface
    SUPERTYPE OF (ONEOF (elementary_surface,swept_surface,bounded_surface,
       offset_surface,surface_replica))
    SUBTYPE OF (geometric_representation_item);
  END_ENTITY; -- surface

  ENTITY surface_curve
    SUPERTYPE OF (ONEOF (intersection_curve,seam_curve) ANDOR
       bounded_surface_curve)
    SUBTYPE OF (curve);
      curve_3d              : curve;
      associated_geometry   : LIST [1:2] OF pcurve_or_surface;
      master_representation : preferred_surface_curve_representation;
    DERIVE
```

© ISO 2001 — All rights reserved

```
    basis_surface : SET [1:2] OF surface := get_basis_surface(SELF);
  WHERE
    wr1: (curve_3d.dim = 3);
    wr2: (('PLANT_SPATIAL_CONFIGURATION.PCURVE' IN
           TYPEOF(associated_geometry[1]))
           OR (master_representation <> pcurve_s1));
    wr3: (('PLANT_SPATIAL_CONFIGURATION.PCURVE' IN
           TYPEOF(associated_geometry[2]))
           OR (master_representation <> pcurve_s2));
    wr4: (NOT ('PLANT_SPATIAL_CONFIGURATION.PCURVE' IN TYPEOF(curve_3d)));
END_ENTITY; -- surface_curve

ENTITY surface_of_linear_extrusion
  SUBTYPE OF (swept_surface);
    extrusion_axis : vector;
END_ENTITY; -- surface_of_linear_extrusion

ENTITY surface_of_revolution
  SUBTYPE OF (swept_surface);
    axis_position : axis1_placement;
  DERIVE
    axis_line : line := dummy_gri || curve() || line(axis_position.
                location,dummy_gri || vector(axis_position.z,1));
END_ENTITY; -- surface_of_revolution

ENTITY surface_patch
  SUBTYPE OF (founded_item);
    parent_surface : bounded_surface;
    u_transition   : transition_code;
    v_transition   : transition_code;
    u_sense        : BOOLEAN;
    v_sense        : BOOLEAN;
  INVERSE
    using_surfaces : BAG [1:?] OF rectangular_composite_surface FOR
                     segments;
  WHERE
    wr1: (NOT ('PLANT_SPATIAL_CONFIGURATION.CURVE_BOUNDED_SURFACE' IN
TYPEOF(
           parent_surface)));
END_ENTITY; -- surface_patch

ENTITY surface_replica
  SUBTYPE OF (surface);
    parent_surface : surface;
    transformation : cartesian_transformation_operator_3d;
  WHERE
    wr1: acyclic_surface_replica(SELF,parent_surface);
END_ENTITY; -- surface_replica

ENTITY swage_fitting_class
  SUBTYPE OF (group);
```

 © ISO 2001 — All rights reserved

```
    WHERE
      wr1: (SIZEOF(QUERY ( aca <* QUERY ( ca <* USEDIN(SELF,
            'PLANT_SPATIAL_CONFIGURATION.CLASSIFICATION_ASSIGNMENT.' +
            'ASSIGNED_CLASS') |

('PLANT_SPATIAL_CONFIGURATION.APPLIED_CLASSIFICATION_ASSIGNMENT'
            IN TYPEOF(ca)) ) | (NOT (SIZEOF(QUERY ( it <* aca.items | (
            NOT (
            'PLANT_SPATIAL_CONFIGURATION.PIPING_COMPONENT_DEFINITION' IN
             TYPEOF(it))) )) = 0)) )) = 0);
      wr2: (SIZEOF(QUERY ( aca <* QUERY ( ca <* USEDIN(SELF,
            'PLANT_SPATIAL_CONFIGURATION.CLASSIFICATION_ASSIGNMENT.' +
            'ASSIGNED_CLASS') |

('PLANT_SPATIAL_CONFIGURATION.APPLIED_CLASSIFICATION_ASSIGNMENT'
            IN TYPEOF(ca)) ) | (NOT (SIZEOF(QUERY ( pcd <*
            QUERY ( it <* aca.items | (
            'PLANT_SPATIAL_CONFIGURATION.PIPING_COMPONENT_DEFINITION' IN
             TYPEOF(it)) ) | (NOT (SIZEOF(QUERY ( aca1 <* USEDIN(pcd.
            formation.of_product,'PLANT_SPATIAL_CONFIGURATION.' +
            'APPLIED_CLASSIFICATION_ASSIGNMENT.ITEMS') | class_in_tree(
            aca.assigned_class,'swage') )) = 1)) )) = 0)) )) = 0);
  END_ENTITY; -- swage_fitting_class

  ENTITY swept_area_solid
    SUPERTYPE OF (ONEOF (revolved_area_solid,extruded_area_solid))
    SUBTYPE OF (solid_model);
      swept_area : curve_bounded_surface;
    WHERE
      wr1: ('PLANT_SPATIAL_CONFIGURATION.PLANE' IN
TYPEOF(swept_area.basis_surface));
  END_ENTITY; -- swept_area_solid

  ENTITY swept_face_solid
    SUPERTYPE OF (ONEOF (extruded_face_solid,revolved_face_solid))
    SUBTYPE OF (solid_model);
      swept_face : face_surface;
    WHERE
      wr1: ('PLANT_SPATIAL_CONFIGURATION.PLANE' IN
TYPEOF(swept_face.face_geometry));
  END_ENTITY; -- swept_face_solid

  ENTITY swept_surface
    SUPERTYPE OF (ONEOF (surface_of_linear_extrusion,surface_of_revolution))
    SUBTYPE OF (surface);
      swept_curve : curve;
  END_ENTITY; -- swept_surface

  ENTITY symmetric_shape_aspect
    SUBTYPE OF (shape_aspect);
    INVERSE
      basis_relationships : SET [1:?] OF shape_aspect_relationship FOR
                            relating_shape_aspect;
    WHERE
```

© ISO 2001 — All rights reserved

```
    wr1: (SIZEOF(QUERY ( x <* SELF\symmetric_shape_aspect.
          basis_relationships | (
          'PLANT_SPATIAL_CONFIGURATION.CENTRE_OF_SYMMETRY' IN
          TYPEOF(x\shape_aspect_relationship.related_shape_aspect)) ))
          >= 1);
  END_ENTITY; -- symmetric_shape_aspect

  ENTITY system_class
    SUBTYPE OF (group);
    WHERE
     wr1: (SIZEOF(QUERY ( aca <* QUERY ( ca <* USEDIN(SELF,
          'PLANT_SPATIAL_CONFIGURATION.CLASSIFICATION_ASSIGNMENT.' +
          'ASSIGNED_CLASS') |

('PLANT_SPATIAL_CONFIGURATION.APPLIED_CLASSIFICATION_ASSIGNMENT'
          IN TYPEOF(ca)) ) | (NOT (SIZEOF(QUERY ( it <* aca.items | (
          NOT (SIZEOF(TYPEOF(it) * [
          'PLANT_SPATIAL_CONFIGURATION.CABLEWAY_SYSTEM',
          'PLANT_SPATIAL_CONFIGURATION.DUCTING_SYSTEM',
          'PLANT_SPATIAL_CONFIGURATION.ELECTRICAL_SYSTEM',

'PLANT_SPATIAL_CONFIGURATION.INSTRUMENTATION_AND_CONTROL_SYSTEM'
,
          'PLANT_SPATIAL_CONFIGURATION.PIPING_SYSTEM',
          'PLANT_SPATIAL_CONFIGURATION.STRUCTURAL_SYSTEM']) = 1)) )) =
           0)) )) = 0);
  END_ENTITY; -- system_class

  ENTITY system_space
    SUBTYPE OF (product_definition_shape);
    WHERE
     wr1: (SIZEOF(TYPEOF(SELF.definition) * [
          'PLANT_SPATIAL_CONFIGURATION.ELECTRICAL_SYSTEM',
          'PLANT_SPATIAL_CONFIGURATION.DUCTING_SYSTEM',
          'PLANT_SPATIAL_CONFIGURATION.' +
          'INSTRUMENTATION_AND_CONTROL_SYSTEM',
          'PLANT_SPATIAL_CONFIGURATION.PIPING_SYSTEM',
          'PLANT_SPATIAL_CONFIGURATION.STRUCTURAL_SYSTEM']) = 1);
  END_ENTITY; -- system_space

  ENTITY thermodynamic_temperature_measure_with_unit
    SUBTYPE OF (measure_with_unit);
    WHERE
     wr1:
('PLANT_SPATIAL_CONFIGURATION.THERMODYNAMIC_TEMPERATURE_UNIT' IN
        TYPEOF(SELF\measure_with_unit.unit_component));
  END_ENTITY; -- thermodynamic_temperature_measure_with_unit

  ENTITY thermodynamic_temperature_unit
    SUBTYPE OF (named_unit);
    WHERE
```

 © ISO 2001 — All rights reserved

```
    wr1: ((SELF\named_unit.dimensions.length_exponent = 0) AND (SELF\
          named_unit.dimensions.mass_exponent = 0) AND (SELF\
          named_unit.dimensions.time_exponent = 0) AND (SELF\
          named_unit.dimensions.electric_current_exponent = 0) AND (
          SELF\named_unit.dimensions.
          thermodynamic_temperature_exponent = 1) AND (SELF\named_unit
          .dimensions.amount_of_substance_exponent = 0) AND (SELF\
          named_unit.dimensions.luminous_intensity_exponent = 0));
END_ENTITY; -- thermodynamic_temperature_unit

ENTITY time_measure_with_unit
  SUBTYPE OF (measure_with_unit);
  WHERE
    wr1: ('PLANT_SPATIAL_CONFIGURATION.TIME_UNIT' IN
          TYPEOF(SELF\measure_with_unit.unit_component));
END_ENTITY; -- time_measure_with_unit

ENTITY time_unit
  SUBTYPE OF (named_unit);
  WHERE
    wr1: ((SELF\named_unit.dimensions.length_exponent = 0) AND (SELF\
          named_unit.dimensions.mass_exponent = 0) AND (SELF\
          named_unit.dimensions.time_exponent = 1) AND (SELF\
          named_unit.dimensions.electric_current_exponent = 0) AND (
          SELF\named_unit.dimensions.
          thermodynamic_temperature_exponent = 0) AND (SELF\named_unit
          .dimensions.amount_of_substance_exponent = 0) AND (SELF\
          named_unit.dimensions.luminous_intensity_exponent = 0));
END_ENTITY; -- time_unit

ENTITY topological_representation_item
  SUPERTYPE OF (ONEOF (vertex,edge,face_bound,face,vertex_shell,
     wire_shell,connected_face_set,loop ANDOR path))
  SUBTYPE OF (representation_item);
END_ENTITY; -- topological_representation_item

ENTITY toroidal_surface
  SUBTYPE OF (elementary_surface);
    major_radius : positive_length_measure;
    minor_radius : positive_length_measure;
END_ENTITY; -- toroidal_surface

ENTITY torus
  SUBTYPE OF (geometric_representation_item);
    position     : axis1_placement;
    major_radius : positive_length_measure;
    minor_radius : positive_length_measure;
  WHERE
    wr1: (major_radius > minor_radius);
END_ENTITY; -- torus

ENTITY trimmed_curve
  SUBTYPE OF (bounded_curve);
    basis_curve          : curve;
```

© ISO 2001 — All rights reserved

```
    trim_1              : SET [1:2] OF trimming_select;
    trim_2              : SET [1:2] OF trimming_select;
    sense_agreement       : BOOLEAN;
    master_representation : trimming_preference;
  WHERE
    wr1: ((HIINDEX(trim_1) = 1) OR (TYPEOF(trim_1[1]) <> TYPEOF(trim_1[2])));
    wr2: ((HIINDEX(trim_2) = 1) OR (TYPEOF(trim_2[1]) <> TYPEOF(trim_2[2])));
END_ENTITY; -- trimmed_curve

ENTITY type_qualifier;
    name : label;
END_ENTITY; -- type_qualifier

ENTITY uncertainty_measure_with_unit
  SUBTYPE OF (measure_with_unit);
  name        : label;
  description : OPTIONAL text;
WHERE
  WR1: valid_measure_value (SELF\measure_with_unit.value_component);
END_ENTITY; -- uncertainty_measure_with_unit

ENTITY uniform_curve
  SUBTYPE OF (b_spline_curve);
END_ENTITY; -- uniform_curve

ENTITY uniform_surface
  SUBTYPE OF (b_spline_surface);
END_ENTITY; -- uniform_surface

ENTITY valve_class
  SUBTYPE OF (group);
  WHERE
    wr1: (SIZEOF(QUERY ( aca <* QUERY ( ca <* USEDIN(SELF,
            'PLANT_SPATIAL_CONFIGURATION.CLASSIFICATION_ASSIGNMENT.' +
            'ASSIGNED_CLASS') |

('PLANT_SPATIAL_CONFIGURATION.APPLIED_CLASSIFICATION_ASSIGNMENT'
            IN TYPEOF(ca)) ) | (NOT (SIZEOF(QUERY ( it <* aca.items | (
            NOT (
            'PLANT_SPATIAL_CONFIGURATION.PIPING_COMPONENT_DEFINITION' IN
             TYPEOF(it))) )) = 0)) )) = 0);
    wr2: (SIZEOF(QUERY ( aca <* QUERY ( ca <* USEDIN(SELF,
            'PLANT_SPATIAL_CONFIGURATION.CLASSIFICATION_ASSIGNMENT.' +
            'ASSIGNED_CLASS') |

('PLANT_SPATIAL_CONFIGURATION.APPLIED_CLASSIFICATION_ASSIGNMENT'
            IN TYPEOF(ca)) ) | (NOT (SIZEOF(QUERY ( pcd <*
            QUERY ( it <* aca.items | (
            'PLANT_SPATIAL_CONFIGURATION.PIPING_COMPONENT_DEFINITION' IN
             TYPEOF(it)) ) | (NOT (SIZEOF(QUERY ( aca1 <* USEDIN(pcd.
            formation.of_product,'PLANT_SPATIAL_CONFIGURATION.' +
```

 © ISO 2001 — All rights reserved

```
          'APPLIED_CLASSIFICATION_ASSIGNMENT.ITEMS') | class_in_tree(
          aca1.assigned_class,'valve') )) = 1)) )) = 0)) )) = 0);
END_ENTITY; -- valve_class

ENTITY vector
  SUBTYPE OF (geometric_representation_item);
    orientation : direction;
    magnitude   : length_measure;
  WHERE
    wr1: (magnitude >= 0);
END_ENTITY; -- vector

ENTITY versioned_action_request;
    id          : identifier;
    version     : label;
    purpose     : text;
    description : OPTIONAL text;
END_ENTITY; -- versioned_action_request

ENTITY vertex
  SUBTYPE OF (topological_representation_item);
END_ENTITY; -- vertex

ENTITY vertex_loop
  SUBTYPE OF (loop);
    loop_vertex : vertex;
END_ENTITY; -- vertex_loop

ENTITY vertex_point
  SUBTYPE OF(vertex,geometric_representation_item);
  vertex_geometry : point;
END_ENTITY;

ENTITY vertex_shell
  SUBTYPE OF (topological_representation_item);
    vertex_shell_extent : vertex_loop;
END_ENTITY; -- vertex_shell

ENTITY wire_shell
  SUBTYPE OF (topological_representation_item);
    wire_shell_extent : SET [1:?] OF loop;
  WHERE
    wr1: (NOT mixed_loop_type_set(wire_shell_extent));
END_ENTITY; -- wire_shell

RULE application_context_requires_ap_definition FOR (application_context,
          application_protocol_definition);

WHERE
  wr1: (SIZEOF(QUERY ( ac <* application_context | (NOT (SIZEOF(
          QUERY ( apd <* application_protocol_definition | ((ac :=: apd.
          application) AND (apd.
          application_interpreted_model_schema_name =
          'plant_spatial_configuration')) )) = 1)) )) = 0);
```

© ISO 2001 — All rights reserved

```
END_RULE; -- application_context_requires_ap_definition

RULE approval_requires_approval_date_time FOR (approval_date_time,
        approval);

WHERE
  wr1: (SIZEOF(QUERY ( app <* approval | (NOT (SIZEOF(QUERY ( adt <*
        approval_date_time | (app :=: adt.dated_approval) )) = 1)) ))
        = 0);

END_RULE; -- approval_requires_approval_date_time

RULE approval_requires_approval_person_organization FOR (
        approval_person_organization, approval);

WHERE
  wr1: (SIZEOF(QUERY ( app <* approval | (NOT (SIZEOF(QUERY ( apo <*
        approval_person_organization | (app :=: apo.
        authorized_approval) )) = 1)) )) = 0);

END_RULE; -- approval_requires_approval_person_organization

RULE change_action_requires_date FOR (change_action,
        applied_date_assignment);

WHERE
  wr1: (SIZEOF(QUERY ( ca <* change_action | (NOT (SIZEOF(
        QUERY ( pscda <* applied_date_assignment | (ca IN pscda.items) ))
        = 1)) )) = 0);

END_RULE; -- change_action_requires_date

RULE change_item_requires_creation_date FOR (
        plant_spatial_configuration_change_assignment,
        applied_date_assignment);

WHERE
  wr1: (SIZEOF(QUERY ( pscca <*
        plant_spatial_configuration_change_assignment | (NOT (SIZEOF(
        QUERY ( ch_it <* pscca.items | (NOT (SIZEOF(QUERY ( pscda <*
        applied_date_assignment | ((NOT (ch_it IN pscda.items)) OR (
        pscda.role.name = 'creation date')) )) = 1)) )) = 0)) )) = 0);

END_RULE; -- change_item_requires_creation_date

RULE change_item_requires_id FOR (
        plant_spatial_configuration_change_assignment,
        change_item_id_assignment);

WHERE
```

 © ISO 2001 — All rights reserved

```
  wr1: (SIZEOF(QUERY ( pscca <*
        plant_spatial_configuration_change_assignment | (NOT (SIZEOF(
        QUERY ( ch_it <* pscca.items | (NOT (SIZEOF(QUERY ( ciia <*
        change_item_id_assignment | (ch_it IN ciia.items) )) = 1)) ))
        = 0)) )) = 0);

END_RULE; -- change_item_requires_id

RULE change_life_cycle_stage_usage_requires_approval FOR (
        versioned_action_request, applied_approval_assignment);

WHERE
  wr1: (SIZEOF(QUERY ( vareq <* versioned_action_request | (NOT (SIZEOF(
        QUERY ( pscaa <* applied_approval_assignment | (vareq IN pscaa
        .items) )) = 1)) )) = 0);

END_RULE; -- change_life_cycle_stage_usage_requires_approval

RULE change_life_cycle_stage_usage_requires_stage FOR (
        versioned_action_request, action_request_status);

WHERE
  wr1: (SIZEOF(QUERY ( vareq <* versioned_action_request | (NOT (SIZEOF(
        QUERY ( ars <* action_request_status | (vareq :=: ars.
        assigned_request) )) = 1)) )) = 0);

END_RULE; -- change_life_cycle_stage_usage_requires_stage

RULE compatible_dimension FOR (cartesian_point, direction,
        geometric_representation_context);

WHERE
  wr1: (SIZEOF(QUERY ( x <* cartesian_point | (SIZEOF(QUERY ( y <*
        geometric_representation_context | (item_in_context(x,y) AND (
        HIINDEX(x.coordinates) <> y.coordinate_space_dimension)) )) >
        0) )) = 0);
  wr2: (SIZEOF(QUERY ( x <* direction | (SIZEOF(QUERY ( y <*
        geometric_representation_context | (item_in_context(x,y) AND (
        HIINDEX(x.direction_ratios) <> y.coordinate_space_dimension)) ))
        > 0) )) = 0);

END_RULE; -- compatible_dimension

RULE dependent_instantiable_application_context FOR (application_context);

WHERE
  wr1: (SIZEOF(QUERY ( ac <* application_context | (NOT (SIZEOF(USEDIN(
        ac,")) >= 1)) )) = 0);

END_RULE; -- dependent_instantiable_application_context

RULE dependent_instantiable_half_space_solid FOR (half_space_solid);

WHERE
```

© ISO 2001 — All rights reserved

```
  wr1: (SIZEOF(QUERY ( hss <* half_space_solid | (NOT (SIZEOF(USEDIN(
          hss,")) >= 1)) )) = 0);

END_RULE; -- dependent_instantiable_half_space_solid

RULE dependent_instantiable_product_context FOR (product_context);

WHERE
  wr1: (SIZEOF(QUERY ( pc <* product_context | (NOT (SIZEOF(USEDIN(pc,"))
          >= 1)) )) = 0);

END_RULE; -- dependent_instantiable_product_context

RULE dependent_instantiable_product_definition_context FOR (
          product_definition_context);

WHERE
  wr1: (SIZEOF(QUERY ( pdc <* product_definition_context | (NOT (SIZEOF(
          USEDIN(pdc,")) >= 1)) )) = 0);

END_RULE; -- dependent_instantiable_product_definition_context

RULE product_context_discipline_type_constraint FOR (product_context);

WHERE
  wr1: (SIZEOF(QUERY ( pc <* product_context | (NOT (pc.discipline_type
          = 'process plant')) )) = 0);

END_RULE; -- product_context_discipline_type_constraint

RULE product_definition_context_name_constraint FOR (
          product_definition_context);

WHERE
  wr1: (SIZEOF(QUERY ( pdc <* product_definition_context | (NOT (pdc.
          name IN ['functional definition','physical definition',
          'functional occurrence','physical occurrence',
          'catalogue definition','fabrication assembly'])) )) = 0);

END_RULE; -- product_definition_context_name_constraint

RULE product_definition_usage_constraint FOR (product_definition);

WHERE
  wr1: (SIZEOF(QUERY ( pd <* product_definition | ((pd.
          frame_of_reference.name = 'physical occurrence') AND (NOT (
          SIZEOF(QUERY ( pdr <* USEDIN(pd,
          'PLANT_SPATIAL_CONFIGURATION.PRODUCT_DEFINITION_RELATIONSHIP.'
          + 'RELATED_PRODUCT_DEFINITION') | (SIZEOF(TYPEOF(pdr) * [
          'PLANT_SPATIAL_CONFIGURATION.PRODUCT_DEFINITION_USAGE',
          'PLANT_SPATIAL_CONFIGURATION.MAKE_FROM_USAGE_OPTION',
```

 © ISO 2001 — All rights reserved

```
        'PLANT_SPATIAL_CONFIGURATION.ASSEMBLY_COMPONENT_USAGE']) = 1)
))
        <= 1))) )) = 0);

  END_RULE; -- product_definition_usage_constraint

  RULE subtype_exclusive_characterized_object FOR (characterized_object);

  WHERE
   wr1: (SIZEOF(QUERY ( co <* characterized_object | (NOT (SIZEOF([
        'PLANT_SPATIAL_CONFIGURATION.PIPING_COMPONENT_CLASS',
        'PLANT_SPATIAL_CONFIGURATION.SITE',
        'PLANT_SPATIAL_CONFIGURATION.STREAM_DESIGN_CASE'] * TYPEOF(co))
        <= 1)) )) = 0);

  END_RULE; -- subtype_exclusive_characterized_object

  RULE subtype_mandatory_externally_defined_item FOR (
        externally_defined_item);

  WHERE
   wr1: (SIZEOF(QUERY ( edi <* externally_defined_item | (NOT (SIZEOF([
       'PLANT_SPATIAL_CONFIGURATION.CATALOGUE_CONNECTOR',
       'PLANT_SPATIAL_CONFIGURATION.EXTERNALLY_DEFINED_CLASS',

'PLANT_SPATIAL_CONFIGURATION.EXTERNALLY_DEFINED_PLANT_ITEM_DEFINI
TION',
       'PLANT_SPATIAL_CONFIGURATION.EXTERNALLY_DEFINED_DOCUMENT'] *
       TYPEOF(edi)) = 1)) )) = 0);

  END_RULE; -- subtype_mandatory_externally_defined_item

  RULE subtype_mandatory_pre_defined_item FOR (pre_defined_item);

  WHERE
   wr1: (SIZEOF(QUERY ( pdi <* pre_defined_item | (NOT (
        'PLANT_SPATIAL_CONFIGURATION.KNOWN_SOURCE' IN TYPEOF(pdi))) ))
        = 0);

  END_RULE; -- subtype_mandatory_pre_defined_item

  RULE subtype_mandatory_shape_representation FOR (shape_representation);

  WHERE
   wr1: (SIZEOF(QUERY ( sr <* shape_representation | (NOT (SIZEOF([
        'PLANT_SPATIAL_CONFIGURATION.' +
        'PLANT_CSG_SHAPE_REPRESENTATION',
        'PLANT_SPATIAL_CONFIGURATION.HYBRID_SHAPE_REPRESENTATION',
        'PLANT_SPATIAL_CONFIGURATION.SHAPE_DIMENSION_REPRESENTATION',
        'PLANT_SPATIAL_CONFIGURATION.' + 'SITE_REPRESENTATION',
        'PLANT_SPATIAL_CONFIGURATION.PLANT_DESIGN_CSG_PRIMITIVE'] *
        TYPEOF(sr)) = 1)) )) = 0);

  END_RULE; -- subtype_mandatory_shape_representation
```

© ISO 2001 — All rights reserved

```
RULE value_for_application_context FOR (application_context);

WHERE
  wr1: (SIZEOF(QUERY ( ac <* application_context | (NOT (ac.application
          = 'plant spatial configuration')) )) = 0);

END_RULE; -- value_for_application_context

RULE version2_p41_object_role_selection FOR (role_association);

WHERE
  wr1: (SIZEOF(QUERY ( ra <* role_association | (NOT ((
          'PLANT_SPATIAL_CONFIGURATION.' +
          'PLANT_SPATIAL_CONFIGURATION_CHANGE_ASSIGNMENT') IN TYPEOF(ra.
          item_with_role))) )) = 0);

END_RULE; -- version2_p41_object_role_selection

RULE version2_p41_uninstantiable_basic_attributes FOR (
          description_attribute, id_attribute, name_attribute);

WHERE
  wr1: (SIZEOF(bag_to_set(description_attribute)) = 0);
  wr2: (SIZEOF(bag_to_set(id_attribute)) = 0);
  wr3: (SIZEOF(bag_to_set(name_attribute)) = 0);

END_RULE; -- version2_p41_uninstantiable_basic_attributes

FUNCTION acyclic_curve_replica(
            rep: curve_replica;
            parent: curve
    ): BOOLEAN;
  IF NOT ('PLANT_SPATIAL_CONFIGURATION.CURVE_REPLICA' IN TYPEOF(parent))
THEN
    RETURN(TRUE);
  END_IF;
  IF parent :=: rep THEN
    RETURN(FALSE);
  ELSE
    RETURN(acyclic_curve_replica(rep,parent\curve_replica.parent_curve));
  END_IF;

END_FUNCTION; -- acyclic_curve_replica

FUNCTION acyclic_mapped_representation(
            parent_set: SET OF representation;
            children_set: SET OF representation_item
    ): BOOLEAN;

  LOCAL
```

 © ISO 2001 — All rights reserved

```
    x : SET OF representation_item;
    y : SET OF representation_item;
  END_LOCAL;
  x := QUERY ( z <* children_set | ('PLANT_SPATIAL_CONFIGURATION.MAPPED_ITEM'
      IN TYPEOF(z)) );
  IF SIZEOF(x) > 0 THEN
    REPEAT i := 1 TO HIINDEX(x) BY 1;
      IF x[i]\mapped_item.mapping_source.mapped_representation IN
          parent_set THEN
        RETURN(FALSE);
      END_IF;
      IF NOT acyclic_mapped_representation(parent_set + x[i]\mapped_item
          .mapping_source.mapped_representation,x[i]\mapped_item.
          mapping_source.mapped_representation.items) THEN
        RETURN(FALSE);
      END_IF;
    END_REPEAT;
  END_IF;
  x := children_set - x;
  IF SIZEOF(x) > 0 THEN
    REPEAT i := 1 TO HIINDEX(x) BY 1;
      y := QUERY ( z <* bag_to_set(USEDIN(x[i],'')) | (
          'PLANT_SPATIAL_CONFIGURATION.REPRESENTATION_ITEM' IN TYPEOF(z))
);
      IF NOT acyclic_mapped_representation(parent_set,y) THEN
        RETURN(FALSE);
      END_IF;
    END_REPEAT;
  END_IF;
  RETURN(TRUE);

END_FUNCTION; -- acyclic_mapped_representation

FUNCTION acyclic_point_replica(
          rep: point_replica;
          parent: point
    ): BOOLEAN;
  IF NOT ('PLANT_SPATIAL_CONFIGURATION.POINT_REPLICA' IN TYPEOF(parent))
THEN
    RETURN(TRUE);
  END_IF;
  IF parent :=: rep THEN
    RETURN(FALSE);
  ELSE
    RETURN(acyclic_point_replica(rep,parent\point_replica.parent_pt));
  END_IF;

END_FUNCTION; -- acyclic_point_replica

FUNCTION acyclic_product_definition_relationship(
          relation: product_definition_relationship;
          relatives: SET [1:?] OF product_definition;
          specific_relation: STRING
    ): BOOLEAN;
```

© ISO 2001 — All rights reserved

```
  LOCAL
    x : SET OF product_definition_relationship;
  END_LOCAL;
  IF relation.relating_product_definition IN relatives THEN
    RETURN(FALSE);
  END_IF;
  x := QUERY ( pd <* bag_to_set(USEDIN(relation.
      relating_product_definition,'PLANT_SPATIAL_CONFIGURATION.' +
      'PRODUCT_DEFINITION_RELATIONSHIP.' + 'RELATED_PRODUCT_DEFINITION'))
       | (specific_relation IN TYPEOF(pd)) );
  REPEAT i := 1 TO HIINDEX(x) BY 1;
    IF NOT acyclic_product_definition_relationship(x[i],relatives +
        relation.relating_product_definition,specific_relation) THEN
      RETURN(FALSE);
    END_IF;
  END_REPEAT;
  RETURN(TRUE);

 END_FUNCTION; -- acyclic_product_definition_relationship

 FUNCTION acyclic_set_replica(
            rep: geometric_set_replica;
            parent: geometric_set
    ): BOOLEAN;
  IF NOT ('PLANT_SPATIAL_CONFIGURATION.GEOMETRIC_SET_REPLICA' IN
TYPEOF(parent))
       THEN
    RETURN(TRUE);
  END_IF;
  IF parent :=: rep THEN
    RETURN(FALSE);
  ELSE
    RETURN(acyclic_set_replica(rep,parent\geometric_set_replica.
        parent_set));
  END_IF;

 END_FUNCTION; -- acyclic_set_replica

 FUNCTION acyclic_surface_replica(
            rep: surface_replica;
            parent: surface
    ): BOOLEAN;
  IF NOT ('PLANT_SPATIAL_CONFIGURATION.SURFACE_REPLICA' IN
TYPEOF(parent)) THEN
    RETURN(TRUE);
  END_IF;
  IF parent :=: rep THEN
    RETURN(FALSE);
  ELSE
    RETURN(acyclic_surface_replica(rep,parent\surface_replica.
```

 © ISO 2001 — All rights reserved

```
      parent_surface));
  END_IF;

END_FUNCTION; -- acyclic_surface_replica

FUNCTION applied_identification_correlation(
            aia: applied_identification_assignment
   ): BOOLEAN;

  LOCAL
   i_role : STRING;
  END_LOCAL;
  i_role := aia\identification_assignment.role.name;
  CASE i_role OF
   'global unambiguous identifier'  :        IF SIZEOF(aia.items) <>
        SIZEOF(QUERY ( x <* aia.items | (
        'PLANT_SPATIAL_CONFIGURATION.PRODUCT_DEFINITION' IN TYPEOF(x)) ))
         THEN
      RETURN(FALSE);
    END_IF;
   'stock code'                  :        IF SIZEOF(aia.items) <>
        SIZEOF(QUERY ( x <* aia.items | (
        'PLANT_SPATIAL_CONFIGURATION.PRODUCT_DEFINITION' IN TYPEOF(x)) ))
         THEN
      RETURN(FALSE);
    END_IF;
   'weld id'                     :        IF SIZEOF(aia.items) <>
        SIZEOF(QUERY ( x <* aia.items | (
        'PLANT_SPATIAL_CONFIGURATION.MATERIAL_PROPERTY' IN TYPEOF(x)) ))
         THEN
      RETURN(FALSE);
    END_IF;
   'connecting portion id'       :        IF SIZEOF(aia.items) <>
        SIZEOF(QUERY ( x <* aia.items | (
        'PLANT_SPATIAL_CONFIGURATION.MATERIAL_PROPERTY' IN TYPEOF(x)) ))
         THEN
      RETURN(FALSE);
    END_IF;
   'analysis data point id'      :        IF SIZEOF(aia.items) <>
        SIZEOF(QUERY ( x <* aia.items | (
        'PLANT_SPATIAL_CONFIGURATION.SHAPE_ASPECT' IN TYPEOF(x)) ))
         THEN
      RETURN(FALSE);
    END_IF;
   'document version id'         :        IF SIZEOF(aia.items) <>
        SIZEOF(QUERY ( x <* aia.items | (
        'PLANT_SPATIAL_CONFIGURATION.DOCUMENT' IN TYPEOF(x)) )) THEN
      RETURN(FALSE);
    END_IF;
   OTHERWISE                     :        RETURN(TRUE);
   END_CASE;
  RETURN(TRUE);

END_FUNCTION; -- applied_identification_correlation
```

© ISO 2001 — All rights reserved

```
FUNCTION associated_surface(
            arg: pcurve_or_surface
   ): surface;

  LOCAL
    surf : surface;
  END_LOCAL;
  IF 'PLANT_SPATIAL_CONFIGURATION.PCURVE' IN TYPEOF(arg) THEN
    surf := arg.basis_surface;
  ELSE
    surf := arg;
  END_IF;
  RETURN(surf);

END_FUNCTION; -- associated_surface

FUNCTION bag_to_set(
            the_bag: BAG OF GENERIC:intype
   ): SET OF GENERIC:intype;

  LOCAL
    i       : INTEGER;
    the_set : SET OF GENERIC:intype := [];
  END_LOCAL;
  IF SIZEOF(the_bag) > 0 THEN
    REPEAT i := 1 TO HIINDEX(the_bag) BY 1;
      the_set := the_set + the_bag[i];
    END_REPEAT;
  END_IF;
  RETURN(the_set);

END_FUNCTION; -- bag_to_set

FUNCTION base_axis(
            dim: INTEGER;
            axis1, axis2, axis3: direction
   ): LIST [2:3] OF direction;

  LOCAL
    u      : LIST [2:3] OF direction;
    d1     : direction;
    d2     : direction;
    factor : REAL;
  END_LOCAL;
  IF dim = 3 THEN
    d1 := NVL(normalise(axis3),dummy_gri || direction([0,0,1]));
    d2 := first_proj_axis(d1,axis1);
    u := [d2,second_proj_axis(d1,d2,axis2),d1];
  ELSE
    IF EXISTS(axis1) THEN
```

 © ISO 2001 — All rights reserved

```
      d1 := normalise(axis1);
      u := [d1,orthogonal_complement(d1)];
      IF EXISTS(axis2) THEN
        factor := dot_product(axis2,u[2]);
        IF factor < 0 THEN
          u[2].direction_ratios[1] := -u[2].direction_ratios[1];
          u[2].direction_ratios[2] := -u[2].direction_ratios[2];
        END_IF;
      END_IF;
    ELSE
      IF EXISTS(axis2) THEN
        d1 := normalise(axis2);
        u := [orthogonal_complement(d1),d1];
        u[1].direction_ratios[1] := -u[1].direction_ratios[1];
        u[1].direction_ratios[2] := -u[1].direction_ratios[2];
      ELSE
        u := [dummy_gri || direction([1,0]),dummy_gri || direction([0,1])];
      END_IF;
    END_IF;
  END_IF;
  RETURN(u);

END_FUNCTION; -- base_axis

FUNCTION boolean_choose(
            b: BOOLEAN;
            choice1, choice2: GENERIC:item
    ): GENERIC:item;
  IF b THEN
    RETURN(choice1);
  ELSE
    RETURN(choice2);
  END_IF;

END_FUNCTION; -- boolean_choose

FUNCTION build_2axes(
            ref_direction: direction
    ): LIST [2:2] OF direction;

  LOCAL
    d : direction := NVL(normalise(ref_direction),dummy_gri ||
        direction([1,0]));
  END_LOCAL;
  RETURN([d,orthogonal_complement(d)]);

END_FUNCTION; -- build_2axes

FUNCTION build_axes(
            axis, ref_direction: direction
    ): LIST [3:3] OF direction;

  LOCAL
    d1 : direction;
```

© ISO 2001 — All rights reserved

```
    d2 : direction;
  END_LOCAL;
  d1 := NVL(normalise(axis),dummy_gri || direction([0,0,1]));
  d2 := first_proj_axis(d1,ref_direction);
  RETURN([d2,normalise(cross_product(d1,d2)).orientation,d1]);

END_FUNCTION; -- build_axes

FUNCTION build_transformed_set(
            tr: cartesian_transformation_operator;
            gset: geometric_set
    ): SET [0:?] OF geometric_set_select;

  LOCAL
    s     : SET [1:?] OF geometric_set_select := gset.elements;
    trset : SET [0:?] OF geometric_set_select := [];
  END_LOCAL;
  REPEAT j := 1 TO SIZEOF(s) BY 1;
    IF 'PLANT_SPATIAL_CONFIGURATION.CURVE' IN TYPEOF(s[j]) THEN
      trset := trset + curve_replica(s[j],tr);
    ELSE
      IF 'PLANT_SPATIAL_CONFIGURATION.POINT' IN TYPEOF(s[j]) THEN
        trset := trset + point_replica(s[j],tr);
      ELSE
        IF 'PLANT_SPATIAL_CONFIGURATION.SURFACE' IN TYPEOF(s[j]) THEN
          trset := trset + surface_replica(s[j],tr ||
              cartesian_transformation_operator_3d(?));
        END_IF;
      END_IF;
    END_IF;
  END_REPEAT;
  RETURN(trset);

END_FUNCTION; -- build_transformed_set

FUNCTION class_in_tree(
            class: group;
            val: STRING
    ): BOOLEAN;
  IF class.name = val THEN
    RETURN(TRUE);
  ELSE
    RETURN(SIZEOF(QUERY ( gr <* USEDIN(class,
        'PLANT_SPATIAL_CONFIGURATION.' +
        'GROUP_RELATIONSHIP.RELATED_GROUP') | class_in_tree(gr.
        relating_group,val) )) = 1);
  END_IF;
  RETURN(FALSE);

END_FUNCTION; -- class_in_tree
```

 © ISO 2001 — All rights reserved

```
  FUNCTION closed_shell_reversed(
            a_shell: closed_shell
     ): oriented_closed_shell;

   LOCAL
     the_reverse : oriented_closed_shell;
   END_LOCAL;
   IF 'PLANT_SPATIAL_CONFIGURATION.ORIENTED_CLOSED_SHELL' IN
TYPEOF(a_shell) THEN
     the_reverse := dummy_tri || connected_face_set(a_shell\
        connected_face_set.cfs_faces) || closed_shell() ||
        oriented_closed_shell(a_shell\oriented_closed_shell.
        closed_shell_element,NOT a_shell\oriented_closed_shell.
        orientation);
   ELSE
     the_reverse := dummy_tri || connected_face_set(a_shell\
        connected_face_set.cfs_faces) || closed_shell() ||
        oriented_closed_shell(a_shell,FALSE);
   END_IF;
   RETURN(the_reverse);

  END_FUNCTION; -- closed_shell_reversed

  FUNCTION conditional_reverse(
            p: BOOLEAN;
            an_item: reversible_topology
     ): reversible_topology;
   IF p THEN
     RETURN(an_item);
   ELSE
     RETURN(topology_reversed(an_item));
   END_IF;

  END_FUNCTION; -- conditional_reverse

  FUNCTION constraints_composite_curve_on_surface(
            c: composite_curve_on_surface
     ): BOOLEAN;

   LOCAL
     n_segments : INTEGER := SIZEOF(c.segments);
   END_LOCAL;
   REPEAT k := 1 TO n_segments BY 1;
     IF (NOT ('PLANT_SPATIAL_CONFIGURATION.PCURVE' IN
TYPEOF(c\composite_curve.
        segments[k].parent_curve))) AND (NOT (
        'PLANT_SPATIAL_CONFIGURATION.SURFACE_CURVE' IN
        TYPEOF(c\composite_curve.segments[k].parent_curve))) AND (NOT (
        'PLANT_SPATIAL_CONFIGURATION.COMPOSITE_CURVE_ON_SURFACE' IN
        TYPEOF(c\composite_curve.segments[k].parent_curve))) THEN
       RETURN(FALSE);
     END_IF;
   END_REPEAT;
   RETURN(TRUE);
```

© ISO 2001 — All rights reserved

```
  END_FUNCTION; -- constraints_composite_curve_on_surface

  FUNCTION constraints_geometry_shell_based_wireframe_model(
            m: shell_based_wireframe_model
     ): BOOLEAN;

    LOCAL
     result : BOOLEAN := TRUE;
    END_LOCAL;
    REPEAT j := 1 TO SIZEOF(m.sbwm_boundary) BY 1;
     IF (NOT ('PLANT_SPATIAL_CONFIGURATION.WIRE_SHELL' IN
        TYPEOF(m.sbwm_boundary[j])))
        AND (NOT ('PLANT_SPATIAL_CONFIGURATION.VERTEX_SHELL' IN
TYPEOF(m.
        sbwm_boundary[j]))) THEN
       result := FALSE;
       RETURN(result);
     END_IF;
    END_REPEAT;
    RETURN(result);

  END_FUNCTION; -- constraints_geometry_shell_based_wireframe_model

  FUNCTION constraints_param_b_spline(
            degree, up_knots, up_cp: INTEGER;
            knot_mult: LIST OF INTEGER;
            knots: LIST OF parameter_value
     ): BOOLEAN;

    LOCAL
     k      : INTEGER;
     sum    : INTEGER;
     result : BOOLEAN := TRUE;
    END_LOCAL;
    sum := knot_mult[1];
    REPEAT i := 2 TO up_knots BY 1;
     sum := sum + knot_mult[i];
    END_REPEAT;
    IF (degree < 1) OR (up_knots < 2) OR (up_cp < degree) OR (sum <> (
       degree + up_cp + 2)) THEN
     result := FALSE;
     RETURN(result);
    END_IF;
    k := knot_mult[1];
    IF (k < 1) OR (k > (degree + 1)) THEN
     result := FALSE;
     RETURN(result);
    END_IF;
    REPEAT i := 2 TO up_knots BY 1;
     IF (knot_mult[i] < 1) OR (knots[i] <= knots[i - 1]) THEN
```

 © ISO 2001 — All rights reserved

```
      result := FALSE;
      RETURN(result);
    END_IF;
    k := knot_mult[i];
    IF (i < up_knots) AND (k > degree) THEN
      result := FALSE;
      RETURN(result);
    END_IF;
    IF (i = up_knots) AND (k > (degree + 1)) THEN
      result := FALSE;
      RETURN(result);
    END_IF;
  END_REPEAT;
  RETURN(result);

END_FUNCTION; -- constraints_param_b_spline

FUNCTION constraints_rectangular_composite_surface(
            s: rectangular_composite_surface
    ): BOOLEAN;
  REPEAT i := 1 TO s.n_u BY 1;
    REPEAT j := 1 TO s.n_v BY 1;
      IF NOT (('PLANT_SPATIAL_CONFIGURATION.B_SPLINE_SURFACE' IN
          TYPEOF(s.segments[i][j].parent_surface)) OR (
          'PLANT_SPATIAL_CONFIGURATION.RECTANGULAR_TRIMMED_SURFACE' IN
          TYPEOF(s.segments[i][j].parent_surface))) THEN
        RETURN(FALSE);
      END_IF;
    END_REPEAT;
  END_REPEAT;
  REPEAT i := 1 TO s.n_u - 1 BY 1;
    REPEAT j := 1 TO s.n_v BY 1;
      IF s.segments[i][j].u_transition = discontinuous THEN
        RETURN(FALSE);
      END_IF;
    END_REPEAT;
  END_REPEAT;
  REPEAT i := 1 TO s.n_u BY 1;
    REPEAT j := 1 TO s.n_v - 1 BY 1;
      IF s.segments[i][j].v_transition = discontinuous THEN
        RETURN(FALSE);
      END_IF;
    END_REPEAT;
  END_REPEAT;
  RETURN(TRUE);

END_FUNCTION; -- constraints_rectangular_composite_surface

FUNCTION cross_product(
            arg1, arg2: direction
    ): vector;

  LOCAL
    v2     : LIST [3:3] OF REAL;
```

© ISO 2001 — All rights reserved

```
    v1     : LIST [3:3] OF REAL;
    mag    : REAL;
    res    : direction;
    result : vector;
  END_LOCAL;
  IF (NOT EXISTS(arg1)) OR (arg1.dim = 2) OR (NOT EXISTS(arg2)) OR (arg2
     .dim = 2) THEN
    RETURN(?);
  ELSE
    BEGIN
      v1 := normalise(arg1).direction_ratios;
      v2 := normalise(arg2).direction_ratios;
      res := dummy_gri || direction([(v1[2] * v2[3]) - (v1[3] * v2[2]),(
          v1[3] * v2[1]) - (v1[1] * v2[3]),(v1[1] * v2[2]) - (v1[2] * v2[
          1])]);
      mag := 0;
      REPEAT i := 1 TO 3 BY 1;
        mag := mag + (res.direction_ratios[i] * res.direction_ratios[i]);
      END_REPEAT;
      IF mag > 0 THEN
        result := dummy_gri || vector(res,SQRT(mag));
      ELSE
        result := dummy_gri || vector(arg1,0);
      END_IF;
      RETURN(result);
    END;
  END_IF;

END_FUNCTION; -- cross_product

FUNCTION curve_weights_positive(
            b: rational_b_spline_curve
    ): BOOLEAN;

  LOCAL
    result : BOOLEAN := TRUE;
  END_LOCAL;
  REPEAT i := 0 TO b.upper_index_on_control_points BY 1;
    IF b.weights[i] <= 0 THEN
      result := FALSE;
      RETURN(result);
    END_IF;
  END_REPEAT;
  RETURN(result);

END_FUNCTION; -- curve_weights_positive

FUNCTION derive_dimensional_exponents(
            x: unit
    ): dimensional_exponents;
```

 © ISO 2001 — All rights reserved

```
  LOCAL
    result : dimensional_exponents := dimensional_exponents(0,0,0,0,0,0,
             0);
  END_LOCAL;
  IF 'PLANT_SPATIAL_CONFIGURATION.DERIVED_UNIT' IN TYPEOF(x) THEN
    REPEAT i := LOINDEX(x.elements) TO HIINDEX(x.elements) BY 1;
      result.length_exponent := result.length_exponent + (x.elements[i].
          exponent * x.elements[i].unit.dimensions.length_exponent);
      result.mass_exponent := result.mass_exponent + (x.elements[i].
          exponent * x.elements[i].unit.dimensions.mass_exponent);
      result.time_exponent := result.time_exponent + (x.elements[i].
          exponent * x.elements[i].unit.dimensions.time_exponent);
      result.electric_current_exponent := result.
          electric_current_exponent + (x.elements[i].exponent * x.
          elements[i].unit.dimensions.electric_current_exponent);
      result.thermodynamic_temperature_exponent := result.
          thermodynamic_temperature_exponent + (x.elements[i].exponent *
          x.elements[i].unit.dimensions.
          thermodynamic_temperature_exponent);
      result.amount_of_substance_exponent := result.
          amount_of_substance_exponent + (x.elements[i].exponent * x.
          elements[i].unit.dimensions.amount_of_substance_exponent);
      result.luminous_intensity_exponent := result.
          luminous_intensity_exponent + (x.elements[i].exponent * x.
          elements[i].unit.dimensions.luminous_intensity_exponent);
    END_REPEAT;
  ELSE
    result := x.dimensions;
  END_IF;
  RETURN(result);

END_FUNCTION; -- derive_dimensional_exponents

FUNCTION dimension_of(
            item: geometric_representation_item
    ): dimension_count;

  LOCAL
    x   : SET OF representation;
    y   : representation_context;
    dim : dimension_count;
  END_LOCAL;
  IF 'PLANT_SPATIAL_CONFIGURATION.CARTESIAN_POINT' IN TYPEOF(item) THEN
    dim := SIZEOF(item\cartesian_point.coordinates);
    RETURN(dim);
  END_IF;
  IF 'PLANT_SPATIAL_CONFIGURATION.DIRECTION' IN TYPEOF(item) THEN
    dim := SIZEOF(item\direction.direction_ratios);
    RETURN(dim);
  END_IF;
  IF 'PLANT_SPATIAL_CONFIGURATION.VECTOR' IN TYPEOF(item) THEN
    dim := SIZEOF(item\vector.orientation\direction.direction_ratios);
    RETURN(dim);
  END_IF;
```

© ISO 2001 — All rights reserved

```
  x := using_representations(item);
  y := x[1].context_of_items;
  dim := y\geometric_representation_context.coordinate_space_dimension;
  RETURN(dim);

END_FUNCTION; -- dimension_of

FUNCTION dimensions_for_si_unit(
          n: si_unit_name
   ): dimensional_exponents;
  CASE n OF
   metre        :       RETURN(dimensional_exponents(1,0,0,0,0,0,0));
   gram         :       RETURN(dimensional_exponents(0,1,0,0,0,0,0));
   second       :       RETURN(dimensional_exponents(0,0,1,0,0,0,0));
   ampere       :       RETURN(dimensional_exponents(0,0,0,1,0,0,0));
   kelvin       :       RETURN(dimensional_exponents(0,0,0,0,1,0,0));
   mole         :       RETURN(dimensional_exponents(0,0,0,0,0,1,0));
   candela      :       RETURN(dimensional_exponents(0,0,0,0,0,0,1));
   radian       :       RETURN(dimensional_exponents(0,0,0,0,0,0,0));
   steradian    :       RETURN(dimensional_exponents(0,0,0,0,0,0,0));
   hertz        :       RETURN(dimensional_exponents(0,0,-1,0,0,0,0));
   newton       :       RETURN(dimensional_exponents(1,1,-2,0,0,0,0));
   pascal       :       RETURN(dimensional_exponents(-1,1,-2,0,0,0,0));
   joule        :       RETURN(dimensional_exponents(2,1,-2,0,0,0,0));
   watt         :       RETURN(dimensional_exponents(2,1,-3,0,0,0,0));
   coulomb      :       RETURN(dimensional_exponents(0,0,1,1,0,0,0));
   volt         :       RETURN(dimensional_exponents(2,1,-3,-1,0,0,0));
   farad        :       RETURN(dimensional_exponents(-2,-1,4,1,0,0,0));
   ohm          :       RETURN(dimensional_exponents(2,1,-3,-2,0,0,0));
   siemens      :       RETURN(dimensional_exponents(-2,-1,3,2,0,0,0));
   weber        :       RETURN(dimensional_exponents(2,1,-2,-1,0,0,0));
   tesla        :       RETURN(dimensional_exponents(0,1,-2,-1,0,0,0));
   henry        :       RETURN(dimensional_exponents(2,1,-2,-2,0,0,0));
   degree_celsius  :    RETURN(dimensional_exponents(0,0,0,0,1,0,0));
   lumen        :       RETURN(dimensional_exponents(0,0,0,0,0,0,1));
   lux          :       RETURN(dimensional_exponents(-2,0,0,0,0,0,1));
   becquerel    :       RETURN(dimensional_exponents(0,0,-1,0,0,0,0));
   gray         :       RETURN(dimensional_exponents(2,0,-2,0,0,0,0));
   sievert      :       RETURN(dimensional_exponents(2,0,-2,0,0,0,0));
   OTHERWISE    :       RETURN(?);
   END_CASE;

END_FUNCTION; -- dimensions_for_si_unit

FUNCTION dot_product(
          arg1, arg2: direction
   ): REAL;

  LOCAL
   ndim   : INTEGER;
   scalar : REAL;
```

 © ISO 2001 — All rights reserved

```
    vec1   : direction;
    vec2   : direction;
  END_LOCAL;
  IF (NOT EXISTS(arg1)) OR (NOT EXISTS(arg2)) THEN
    scalar := ?;
  ELSE
    IF arg1.dim <> arg2.dim THEN
      scalar := ?;
    ELSE
      BEGIN
        vec1 := normalise(arg1);
        vec2 := normalise(arg2);
        ndim := arg1.dim;
        scalar := 0;
        REPEAT i := 1 TO ndim BY 1;
          scalar := scalar + (vec1.direction_ratios[i] * vec2.
              direction_ratios[i]);
        END_REPEAT;
      END;
    END_IF;
  END_IF;
  RETURN(scalar);

END_FUNCTION; -- dot_product

FUNCTION edge_reversed(
            an_edge: edge
    ): oriented_edge;

  LOCAL
    the_reverse : oriented_edge;
  END_LOCAL;
  IF 'PLANT_SPATIAL_CONFIGURATION.ORIENTED_EDGE' IN TYPEOF(an_edge)
THEN
    the_reverse := dummy_tri || edge(an_edge.edge_end,an_edge.edge_start)
        || oriented_edge(an_edge\oriented_edge.edge_element,NOT an_edge\
        oriented_edge.orientation);
  ELSE
    the_reverse := dummy_tri || edge(an_edge.edge_end,an_edge.edge_start)
        || oriented_edge(an_edge,FALSE);
  END_IF;
  RETURN(the_reverse);

END_FUNCTION; -- edge_reversed

FUNCTION face_bound_reversed(
            a_face_bound: face_bound
    ): face_bound;

  LOCAL
    the_reverse : face_bound;
  END_LOCAL;
  IF 'PLANT_SPATIAL_CONFIGURATION.FACE_OUTER_BOUND' IN
TYPEOF(a_face_bound) THEN
```

© ISO 2001 — All rights reserved

```
    the_reverse := dummy_tri || face_bound(a_face_bound\face_bound.bound,
        NOT a_face_bound\face_bound.orientation) || face_outer_bound();
  ELSE
    the_reverse := dummy_tri || face_bound(a_face_bound.bound,NOT
        a_face_bound.orientation);
  END_IF;
  RETURN(the_reverse);

END_FUNCTION; -- face_bound_reversed

FUNCTION face_reversed(
            a_face: face
    ): oriented_face;

  LOCAL
    the_reverse : oriented_face;
  END_LOCAL;
  IF 'PLANT_SPATIAL_CONFIGURATION.ORIENTED_FACE' IN TYPEOF(a_face) THEN
    the_reverse := dummy_tri || face(set_of_topology_reversed(a_face.
        bounds)) || oriented_face(a_face\oriented_face.face_element,NOT
        a_face\oriented_face.orientation);
  ELSE
    the_reverse := dummy_tri || face(set_of_topology_reversed(a_face.
        bounds)) || oriented_face(a_face,FALSE);
  END_IF;
  RETURN(the_reverse);

END_FUNCTION; -- face_reversed

FUNCTION first_proj_axis(
            z_axis, arg: direction
    ): direction;

  LOCAL
    x_vec  : vector;
    v      : direction;
    z      : direction;
    x_axis : direction;
  END_LOCAL;
  IF NOT EXISTS(z_axis) THEN
    RETURN(?);
  ELSE
    z := normalise(z_axis);
    IF NOT EXISTS(arg) THEN
      IF z.direction_ratios <> [1,0,0] THEN
        v := dummy_gri || direction([1,0,0]);
      ELSE
        v := dummy_gri || direction([0,1,0]);
      END_IF;
    ELSE
      IF arg.dim <> 3 THEN
```

 © ISO 2001 — All rights reserved

```
        RETURN(?);
      END_IF;
      IF cross_product(arg,z).magnitude = 0 THEN
        RETURN(?);
      ELSE
        v := normalise(arg);
      END_IF;
    END_IF;
    x_vec := scalar_times_vector(dot_product(v,z),z);
    x_axis := vector_difference(v,x_vec).orientation;
    x_axis := normalise(x_axis);
  END_IF;
  RETURN(x_axis);

END_FUNCTION; -- first_proj_axis

FUNCTION get_basis_surface(
            c: curve_on_surface
    ): SET [0:2] OF surface;

  LOCAL
    surfs : SET [0:2] OF surface;
    n     : INTEGER;
  END_LOCAL;
  surfs := [];
  IF 'PLANT_SPATIAL_CONFIGURATION.PCURVE' IN TYPEOF(c) THEN
    surfs := [c\pcurve.basis_surface];
  ELSE
    IF 'PLANT_SPATIAL_CONFIGURATION.SURFACE_CURVE' IN TYPEOF(c) THEN
      n := SIZEOF(c\surface_curve.associated_geometry);
      REPEAT i := 1 TO n BY 1;
        surfs := surfs + associated_surface(c\surface_curve.
            associated_geometry[i]);
      END_REPEAT;
    END_IF;
  END_IF;
  IF 'PLANT_SPATIAL_CONFIGURATION.COMPOSITE_CURVE_ON_SURFACE' IN
TYPEOF(c)
  THEN
    n := SIZEOF(c\composite_curve.segments);
    surfs := get_basis_surface(c\composite_curve.segments[1].
        parent_curve);
    IF n > 1 THEN
      REPEAT i := 2 TO n BY 1;
        surfs := surfs * get_basis_surface(c\composite_curve.segments[i]
            .parent_curve);
      END_REPEAT;
    END_IF;
  END_IF;
  RETURN(surfs);

END_FUNCTION; -- get_basis_surface

FUNCTION get_description_value(
```

© ISO 2001 — All rights reserved

```
            obj: description_attribute_select
    ): text;

  LOCAL
    description_bag : BAG OF description_attribute := USEDIN(obj,
                    'PLANT_SPATIAL_CONFIGURATION.' +
                    'DESCRIPTION_ATTRIBUTE.' + 'DESCRIBED_ITEM');
  END_LOCAL;
  IF SIZEOF(description_bag) = 1 THEN
    RETURN(description_bag[1].attribute_value);
  ELSE
    RETURN(?);
  END_IF;

END_FUNCTION; -- get_description_value

FUNCTION get_id_value(
            obj: id_attribute_select
    ): identifier;

  LOCAL
    id_bag : BAG OF id_attribute := USEDIN(obj,'PLANT_SPATIAL_CONFIGURATION.'
             + 'ID_ATTRIBUTE.' + 'IDENTIFIED_ITEM');
  END_LOCAL;
  IF SIZEOF(id_bag) = 1 THEN
    RETURN(id_bag[1].attribute_value);
  ELSE
    RETURN(?);
  END_IF;

END_FUNCTION; -- get_id_value

FUNCTION get_name_value(
            obj: name_attribute_select
    ): label;

  LOCAL
    name_bag : BAG OF name_attribute := USEDIN(obj,
              'PLANT_SPATIAL_CONFIGURATION.' + 'NAME_ATTRIBUTE.' +
              'NAMED_ITEM');
  END_LOCAL;
  IF SIZEOF(name_bag) = 1 THEN
    RETURN(name_bag[1].attribute_value);
  ELSE
    RETURN(?);
  END_IF;

END_FUNCTION; -- get_name_value

FUNCTION get_role(
            obj: role_select
```

 © ISO 2001 — All rights reserved

```
    ): object_role;

  LOCAL
    role_bag : BAG OF role_association := USEDIN(obj,
              'PLANT_SPATIAL_CONFIGURATION.' + 'ROLE_ASSOCIATION.' +
              'ITEM_WITH_ROLE');
  END_LOCAL;
  IF SIZEOF(role_bag) = 1 THEN
    RETURN(role_bag[1].role);
  ELSE
    RETURN(?);
  END_IF;

END_FUNCTION; -- get_role

FUNCTION item_in_context(
            item: representation_item;
            cntxt: representation_context
    ): BOOLEAN;

  LOCAL
    y : BAG OF representation_item;
  END_LOCAL;
  IF
SIZEOF(USEDIN(item,'PLANT_SPATIAL_CONFIGURATION.REPRESENTATION.ITEMS')
*
      cntxt.representations_in_context) > 0 THEN
    RETURN(TRUE);
  ELSE
    y := QUERY ( z <* USEDIN(item,'') | (
        'PLANT_SPATIAL_CONFIGURATION.REPRESENTATION_ITEM' IN TYPEOF(z)) );
    IF SIZEOF(y) > 0 THEN
      REPEAT i := 1 TO HIINDEX(y) BY 1;
        IF item_in_context(y[i],cntxt) THEN
          RETURN(TRUE);
        END_IF;
      END_REPEAT;
    END_IF;
  END_IF;
  RETURN(FALSE);

END_FUNCTION; -- item_in_context

FUNCTION leap_year(
            year: year_number
    ): BOOLEAN;
  IF (((year MOD 4) = 0) AND ((year MOD 100) <> 0)) OR ((year MOD 400) =
      0) THEN
    RETURN(TRUE);
  ELSE
    RETURN(FALSE);
  END_IF;

END_FUNCTION; -- leap_year
```

© ISO 2001 — All rights reserved

```
FUNCTION list_face_loops(
          f: face
   ): LIST [0:?] OF loop;

  LOCAL
    loops : LIST [0:?] OF loop := [];
  END_LOCAL;
  REPEAT i := 1 TO SIZEOF(f.bounds) BY 1;
    loops := loops + f.bounds[i].bound;
  END_REPEAT;
  RETURN(loops);

END_FUNCTION; -- list_face_loops

FUNCTION list_of_topology_reversed(
          a_list: list_of_reversible_topology_item
   ): list_of_reversible_topology_item;

  LOCAL
    the_reverse : list_of_reversible_topology_item;
  END_LOCAL;
  the_reverse := [];
  REPEAT i := 1 TO SIZEOF(a_list) BY 1;
    the_reverse := topology_reversed(a_list[i]) + the_reverse;
  END_REPEAT;
  RETURN(the_reverse);

END_FUNCTION; -- list_of_topology_reversed

FUNCTION list_to_array(
          lis: LIST [0:?] OF GENERIC:t;
          low, u: INTEGER
   ): ARRAY OF GENERIC:t;

  LOCAL
    n   : INTEGER;
    res : ARRAY [low:u] OF GENERIC:t;
  END_LOCAL;
  n := SIZEOF(lis);
  IF n <> ((u - low) + 1) THEN
    RETURN(?);
  ELSE
    res := [lis[1],n];
    REPEAT i := 2 TO n BY 1;
      res[(low + i) - 1] := lis[i];
    END_REPEAT;
    RETURN(res);
  END_IF;

END_FUNCTION; -- list_to_array
```

 © ISO 2001 — All rights reserved

```
FUNCTION list_to_set(
          l: LIST [0:?] OF GENERIC:t
   ): SET OF GENERIC:t;

  LOCAL
    s : SET OF GENERIC:t := [];
  END_LOCAL;
  REPEAT i := 1 TO SIZEOF(l) BY 1;
    s := s + l[i];
  END_REPEAT;
  RETURN(s);

END_FUNCTION; -- list_to_set

FUNCTION make_array_of_array(
          lis: LIST [1:?] OF LIST [1:?] OF GENERIC:t;
          low1, u1, low2, u2: INTEGER
   ): ARRAY OF ARRAY OF GENERIC:t;

  LOCAL
    res : ARRAY [low1:u1] OF ARRAY [low2:u2] OF GENERIC:t;
  END_LOCAL;
  IF ((u1 - low1) + 1) <> SIZEOF(lis) THEN
    RETURN(?);
  END_IF;
  IF ((u2 - low2) + 1) <> SIZEOF(lis[1]) THEN
    RETURN(?);
  END_IF;
  res := [list_to_array(lis[1],low2,u2),(u1 - low1) + 1];
  REPEAT i := 2 TO HIINDEX(lis) BY 1;
    IF ((u2 - low2) + 1) <> SIZEOF(lis[i]) THEN
      RETURN(?);
    END_IF;
    res[(low1 + i) - 1] := list_to_array(lis[i],low2,u2);
  END_REPEAT;
  RETURN(res);

END_FUNCTION; -- make_array_of_array

FUNCTION mixed_loop_type_set(
          l: SET [0:?] OF loop
   ): LOGICAL;

  LOCAL
    poly_loop_type : LOGICAL;
  END_LOCAL;
  IF SIZEOF(l) <= 1 THEN
    RETURN(FALSE);
  END_IF;
  poly_loop_type := 'PLANT_SPATIAL_CONFIGURATION.POLY_LOOP' IN TYPEOF(l[1]);
  REPEAT i := 2 TO SIZEOF(l) BY 1;
    IF ('PLANT_SPATIAL_CONFIGURATION.POLY_LOOP' IN TYPEOF(l[i])) <>
        poly_loop_type THEN
```

© ISO 2001 — All rights reserved

```
      RETURN(TRUE);
    END_IF;
  END_REPEAT;
  RETURN(FALSE);

END_FUNCTION; -- mixed_loop_type_set

FUNCTION normalise(
          arg: vector_or_direction
   ): vector_or_direction;

  LOCAL
    ndim   : INTEGER;
    v      : direction;
    vec    : vector;
    mag    : REAL;
    result : vector_or_direction;
  END_LOCAL;
  IF NOT EXISTS(arg) THEN
    result := ?;
  ELSE
    ndim := arg.dim;
    IF 'PLANT_SPATIAL_CONFIGURATION.VECTOR' IN TYPEOF(arg) THEN
      BEGIN
        v := dummy_gri || direction(arg.orientation.direction_ratios);
        IF arg.magnitude = 0 THEN
          RETURN(?);
        ELSE
          vec := dummy_gri || vector(v,1);
        END_IF;
      END;
    ELSE
      v := dummy_gri || direction(arg.direction_ratios);
    END_IF;
    mag := 0;
    REPEAT i := 1 TO ndim BY 1;
      mag := mag + (v.direction_ratios[i] * v.direction_ratios[i]);
    END_REPEAT;
    IF mag > 0 THEN
      mag := SQRT(mag);
      REPEAT i := 1 TO ndim BY 1;
        v.direction_ratios[i] := v.direction_ratios[i] / mag;
      END_REPEAT;
      IF 'PLANT_SPATIAL_CONFIGURATION.VECTOR' IN TYPEOF(arg) THEN
        vec.orientation := v;
        result := vec;
      ELSE
        result := v;
      END_IF;
    ELSE
      RETURN(?);
```

 © ISO 2001 — All rights reserved

```
    END_IF;
  END_IF;
  RETURN(result);

END_FUNCTION; -- normalise

FUNCTION open_shell_reversed(
          a_shell: open_shell
    ): oriented_open_shell;

  LOCAL
    the_reverse : oriented_open_shell;
  END_LOCAL;
  IF 'PLANT_SPATIAL_CONFIGURATION.ORIENTED_OPEN_SHELL' IN
TYPEOF(a_shell) THEN
    the_reverse := dummy_tri || connected_face_set(a_shell\
        connected_face_set.cfs_faces) || open_shell() ||
        oriented_open_shell(a_shell\oriented_open_shell.
        open_shell_element,NOT a_shell\oriented_open_shell.orientation);
  ELSE
    the_reverse := dummy_tri || connected_face_set(a_shell\
        connected_face_set.cfs_faces) || open_shell() ||
        oriented_open_shell(a_shell,FALSE);
  END_IF;
  RETURN(the_reverse);

END_FUNCTION; -- open_shell_reversed

FUNCTION orthogonal_complement(
          vec: direction
    ): direction;

  LOCAL
    result : direction;
  END_LOCAL;
  IF (vec.dim <> 2) OR (NOT EXISTS(vec)) THEN
    RETURN(?);
  ELSE
    result := dummy_gri || direction([-vec.direction_ratios[2],vec.
        direction_ratios[1]]);
    RETURN(result);
  END_IF;

END_FUNCTION; -- orthogonal_complement

FUNCTION path_head_to_tail(
          a_path: path
    ): BOOLEAN;

  LOCAL
    n : INTEGER;
    p : BOOLEAN := TRUE;
  END_LOCAL;
  n := SIZEOF(a_path.edge_list);
```

© ISO 2001 — All rights reserved

```
  REPEAT i := 2 TO n BY 1;
    p := p AND (a_path.edge_list[i - 1].edge_end :=: a_path.edge_list[i]
        .edge_start);
  END_REPEAT;
  RETURN(p);

END_FUNCTION; -- path_head_to_tail

FUNCTION path_reversed(
            a_path: path
    ): oriented_path;

  LOCAL
    the_reverse : oriented_path;
  END_LOCAL;
  IF 'PLANT_SPATIAL_CONFIGURATION.ORIENTED_PATH' IN TYPEOF(a_path) THEN
    the_reverse := dummy_tri || path(list_of_topology_reversed(a_path.
        edge_list)) || oriented_path(a_path\oriented_path.path_element,
        NOT a_path\oriented_path.orientation);
  ELSE
    the_reverse := dummy_tri || path(list_of_topology_reversed(a_path.
        edge_list)) || oriented_path(a_path,FALSE);
  END_IF;
  RETURN(the_reverse);

END_FUNCTION; -- path_reversed

FUNCTION plant_spatial_configuration_organization_correlation(
            e: plant_spatial_configuration_organization_assignment
    ): BOOLEAN;

  LOCAL
    o_role : STRING;
  END_LOCAL;
  o_role := e\organization_assignment.role.name;
  CASE o_role OF
    'vendor'       :       IF SIZEOF(e.items) <> SIZEOF(QUERY ( x <*
          e.items | (SIZEOF(['PLANT_SPATIAL_CONFIGURATION.PRODUCT',
          'PLANT_SPATIAL_CONFIGURATION.DOCUMENT'] * TYPEOF(x)) = 1) ))
           THEN
        RETURN(FALSE);
      END_IF;
    'owner'        :       IF SIZEOF(e.items) <> SIZEOF(QUERY ( x <*
          e.items | (SIZEOF(['PLANT_SPATIAL_CONFIGURATION.SITE',
          'PLANT_SPATIAL_CONFIGURATION.DOCUMENT'] * TYPEOF(x)) = 1) ))
           THEN
        RETURN(FALSE);
      END_IF;
    'plant operator'  :       IF SIZEOF(e.items) <> SIZEOF(
          QUERY ( x <* e.items | ('PLANT_SPATIAL_CONFIGURATION.PLANT' IN
          TYPEOF(x)) )) THEN
```

 © ISO 2001 — All rights reserved

```
      RETURN(FALSE);
    END_IF;
  'plant owner'   :       IF SIZEOF(e.items) <> SIZEOF(QUERY ( x <*
        e.items | ('PLANT_SPATIAL_CONFIGURATION.PLANT' IN TYPEOF(x)) ))
         THEN
      RETURN(FALSE);
    END_IF;
  'project owner' :       IF SIZEOF(e.items) <> SIZEOF(QUERY ( x <*
        e.items | ('PLANT_SPATIAL_CONFIGURATION.DESIGN_PROJECT' IN
        TYPEOF(x)) )) THEN
      RETURN(FALSE);
    END_IF;
  'assessor'      :       IF SIZEOF(e.items) <> SIZEOF(QUERY ( x <*
        e.items | (('PLANT_SPATIAL_CONFIGURATION.' +
        'PRODUCT_DEFINITION_RELATIONSHIP') IN TYPEOF(x)) )) THEN
      RETURN(FALSE);
    END_IF;
  OTHERWISE       :       RETURN(TRUE);
  END_CASE;
 RETURN(TRUE);

END_FUNCTION; -- plant_spatial_configuration_organization_correlation

FUNCTION plant_spatial_configuration_person_and_organization_correlation(
          e: plant_spatial_configuration_person_and_organization_assignment
  ): BOOLEAN;

 LOCAL
  po_role : STRING;
 END_LOCAL;
 po_role := e\person_and_organization_assignment.role.name;
 CASE po_role OF
  'owner'         :       IF SIZEOF(e.items) <> SIZEOF(QUERY ( x <*
        e.items | (SIZEOF(['PLANT_SPATIAL_CONFIGURATION.SITE',
        'PLANT_SPATIAL_CONFIGURATION.' + 'CHANGE_ITEM'] * TYPEOF(x)) =
        1) )) THEN
      RETURN(FALSE);
    END_IF;
  'plant owner'   :       IF SIZEOF(e.items) <> SIZEOF(QUERY ( x <*
        e.items | ('PLANT_SPATIAL_CONFIGURATION.PLANT' IN TYPEOF(x)) ))
         THEN
      RETURN(FALSE);
    END_IF;
  'plant operator'  :       IF SIZEOF(e.items) <> SIZEOF(
        QUERY ( x <* e.items | ('PLANT_SPATIAL_CONFIGURATION.PLANT' IN
        TYPEOF(x)) )) THEN
      RETURN(FALSE);
    END_IF;
  OTHERWISE       :       RETURN(TRUE);
  END_CASE;
 RETURN(TRUE);

END_FUNCTION; -- plant_spatial_configuration_person_and_organization_correlation
```

© ISO 2001 — All rights reserved

```
FUNCTION plant_spatial_configuration_person_correlation(
          e: plant_spatial_configuration_person_assignment
  ): BOOLEAN;

  LOCAL
    p_role : STRING;
  END_LOCAL;
  p_role := e\person_assignment.role.name;
  CASE p_role OF
    'vendor'     :        IF SIZEOF(e.items) <> SIZEOF(QUERY ( x <* e.
         items | ('PLANT_SPATIAL_CONFIGURATION.DOCUMENT' IN TYPEOF(x)) ))
          THEN
        RETURN(FALSE);
      END_IF;
    'owner'      :        IF SIZEOF(e.items) <> SIZEOF(QUERY ( x <* e.
         items | (SIZEOF(['PLANT_SPATIAL_CONFIGURATION.SITE',
         'PLANT_SPATIAL_CONFIGURATION.DOCUMENT'] * TYPEOF(x)) = 1) ))
          THEN
        RETURN(FALSE);
      END_IF;
    'plant owner'  :        IF SIZEOF(e.items) <> SIZEOF(QUERY ( x <* e
         .items | ('PLANT_SPATIAL_CONFIGURATION.PLANT' IN TYPEOF(x)) ))
          THEN
        RETURN(FALSE);
      END_IF;
    'assessor'   :        IF SIZEOF(e.items) <> SIZEOF(QUERY ( x <* e.
         items | (('PLANT_SPATIAL_CONFIGURATION.' +
         'PRODUCT_DEFINITION_RELATIONSHIP') IN TYPEOF(x)) )) THEN
        RETURN(FALSE);
      END_IF;
    OTHERWISE    :        RETURN(TRUE);
    END_CASE;
  RETURN(TRUE);

END_FUNCTION; -- plant_spatial_configuration_person_correlation

FUNCTION scalar_times_vector(
          scalar: REAL;
          vec: vector_or_direction
  ): vector;

  LOCAL
    v      : direction;
    mag    : REAL;
    result : vector;
  END_LOCAL;
  IF (NOT EXISTS(scalar)) OR (NOT EXISTS(vec)) THEN
    RETURN(?);
  ELSE
    IF 'PLANT_SPATIAL_CONFIGURATION.VECTOR' IN TYPEOF(vec) THEN
      v := dummy_gri || direction(vec.orientation.direction_ratios);
```

 © ISO 2001 — All rights reserved

```
    mag := scalar * vec.magnitude;
  ELSE
    v := dummy_gri || direction(vec.direction_ratios);
    mag := scalar;
  END_IF;
  IF mag < 0 THEN
    REPEAT i := 1 TO SIZEOF(v.direction_ratios) BY 1;
      v.direction_ratios[i] := -v.direction_ratios[i];
    END_REPEAT;
    mag := -mag;
  END_IF;
  result := dummy_gri || vector(normalise(v),mag);
 END_IF;
 RETURN(result);

END_FUNCTION; -- scalar_times_vector

FUNCTION second_proj_axis(
          z_axis, x_axis, arg: direction
  ): direction;

 LOCAL
  temp   : vector;
  v      : direction;
  y_axis : vector;
 END_LOCAL;
 IF NOT EXISTS(arg) THEN
  v := dummy_gri || direction([0,1,0]);
 ELSE
  v := arg;
 END_IF;
 temp := scalar_times_vector(dot_product(v,z_axis),z_axis);
 y_axis := vector_difference(v,temp);
 temp := scalar_times_vector(dot_product(v,x_axis),x_axis);
 y_axis := vector_difference(y_axis,temp);
 y_axis := normalise(y_axis);
 RETURN(y_axis.orientation);

END_FUNCTION; -- second_proj_axis

FUNCTION set_of_topology_reversed(
          a_set: set_of_reversible_topology_item
  ): set_of_reversible_topology_item;

 LOCAL
  the_reverse : set_of_reversible_topology_item;
 END_LOCAL;
 the_reverse := [];
 REPEAT i := 1 TO SIZEOF(a_set) BY 1;
  the_reverse := the_reverse + topology_reversed(a_set[i]);
 END_REPEAT;
 RETURN(the_reverse);

END_FUNCTION; -- set_of_topology_reversed
```

© ISO 2001 — All rights reserved

```
FUNCTION shell_reversed(
          a_shell: shell
   ): shell;
  IF 'PLANT_SPATIAL_CONFIGURATION.OPEN_SHELL' IN TYPEOF(a_shell) THEN
    RETURN(open_shell_reversed(a_shell));
  ELSE
    IF 'PLANT_SPATIAL_CONFIGURATION.CLOSED_SHELL' IN TYPEOF(a_shell) THEN
      RETURN(closed_shell_reversed(a_shell));
    ELSE
      RETURN(?);
    END_IF;
  END_IF;

END_FUNCTION; -- shell_reversed

FUNCTION surface_weights_positive(
          b: rational_b_spline_surface
   ): BOOLEAN;

  LOCAL
    result : BOOLEAN := TRUE;
  END_LOCAL;
  REPEAT i := 0 TO b.u_upper BY 1;
    REPEAT j := 0 TO b.v_upper BY 1;
      IF b.weights[i][j] <= 0 THEN
        result := FALSE;
        RETURN(result);
      END_IF;
    END_REPEAT;
  END_REPEAT;
  RETURN(result);

END_FUNCTION; -- surface_weights_positive

FUNCTION topology_reversed(
          an_item: reversible_topology
   ): reversible_topology;
  IF 'PLANT_SPATIAL_CONFIGURATION.EDGE' IN TYPEOF(an_item) THEN
    RETURN(edge_reversed(an_item));
  END_IF;
  IF 'PLANT_SPATIAL_CONFIGURATION.PATH' IN TYPEOF(an_item) THEN
    RETURN(path_reversed(an_item));
  END_IF;
  IF 'PLANT_SPATIAL_CONFIGURATION.FACE_BOUND' IN TYPEOF(an_item) THEN
    RETURN(face_bound_reversed(an_item));
  END_IF;
  IF 'PLANT_SPATIAL_CONFIGURATION.FACE' IN TYPEOF(an_item) THEN
    RETURN(face_reversed(an_item));
  END_IF;
  IF 'PLANT_SPATIAL_CONFIGURATION.SHELL' IN TYPEOF(an_item) THEN
```

 © ISO 2001 — All rights reserved

```
    RETURN(shell_reversed(an_item));
  END_IF;
  IF 'SET' IN TYPEOF(an_item) THEN
    RETURN(set_of_topology_reversed(an_item));
  END_IF;
  IF 'LIST' IN TYPEOF(an_item) THEN
    RETURN(list_of_topology_reversed(an_item));
  END_IF;
  RETURN(?);

END_FUNCTION; -- topology_reversed

FUNCTION using_items(
          item: founded_item_select;
          checked_items: SET OF founded_item_select
    ): SET OF founded_item_select;

  LOCAL
    next_items      : SET OF founded_item_select;
    new_check_items : SET OF founded_item_select;
    result_items    : SET OF founded_item_select;
  END_LOCAL;
  result_items := [];
  new_check_items := checked_items + item;
  next_items := QUERY ( z <* bag_to_set(USEDIN(item,'')) | ((
      'PLANT_SPATIAL_CONFIGURATION.REPRESENTATION_ITEM' IN TYPEOF(z)) OR
(
      'PLANT_SPATIAL_CONFIGURATION.FOUNDED_ITEM' IN TYPEOF(z))) );
  IF SIZEOF(next_items) > 0 THEN
    REPEAT i := 1 TO HIINDEX(next_items) BY 1;
      IF NOT (next_items[i] IN new_check_items) THEN
        result_items := result_items + next_items[i] + using_items(
            next_items[i],new_check_items);
      END_IF;
    END_REPEAT;
  END_IF;
  RETURN(result_items);

END_FUNCTION; -- using_items

FUNCTION using_representations(
          item: founded_item_select
    ): SET OF representation;

  LOCAL
    results           : SET OF representation;
    intermediate_items : SET OF founded_item_select;
    result_bag        : BAG OF representation;
  END_LOCAL;
  results := [];
  result_bag :=
USEDIN(item,'PLANT_SPATIAL_CONFIGURATION.REPRESENTATION.ITEMS');
  IF SIZEOF(result_bag) > 0 THEN
    REPEAT i := 1 TO HIINDEX(result_bag) BY 1;
```

© ISO 2001 — All rights reserved

```
      results := results + result_bag[i];
    END_REPEAT;
  END_IF;
  intermediate_items := using_items(item,[]);
  IF SIZEOF(intermediate_items) > 0 THEN
    REPEAT i := 1 TO HIINDEX(intermediate_items) BY 1;
      result_bag := USEDIN(intermediate_items[i],
          'PLANT_SPATIAL_CONFIGURATION.REPRESENTATION.ITEMS');
      IF SIZEOF(result_bag) > 0 THEN
        REPEAT j := 1 TO HIINDEX(result_bag) BY 1;
          results := results + result_bag[j];
        END_REPEAT;
      END_IF;
    END_REPEAT;
  END_IF;
  RETURN(results);

END_FUNCTION; -- using_representations

FUNCTION valid_advanced_csg_tree(
          tree_element: boolean_operand
   ): BOOLEAN;
  IF SIZEOF(TYPEOF(tree_element) * ['PLANT_SPATIAL_CONFIGURATION.BLOCK',
      'PLANT_SPATIAL_CONFIGURATION.TORUS',
      'PLANT_SPATIAL_CONFIGURATION.RIGHT_CIRCULAR_CYLINDER',
      'PLANT_SPATIAL_CONFIGURATION.SPHERE',
      'PLANT_SPATIAL_CONFIGURATION.RIGHT_CIRCULAR_CONE',
      'PLANT_SPATIAL_CONFIGURATION.ECCENTRIC_CONE',
      'PLANT_SPATIAL_CONFIGURATION.PLANT_DESIGN_CSG_PRIMITIVE',
      'PLANT_SPATIAL_CONFIGURATION.CYCLIDE_SEGMENT_SOLID',
      'PLANT_SPATIAL_CONFIGURATION.RECTANGULAR_PYRAMID',
      'PLANT_SPATIAL_CONFIGURATION.EXTRUDED_AREA_SOLID',
      'PLANT_SPATIAL_CONFIGURATION.REVOLVED_AREA_SOLID',
      'PLANT_SPATIAL_CONFIGURATION.HALF_SPACE_SOLID']) = 1 THEN
    RETURN(TRUE);
  ELSE
    IF 'PLANT_SPATIAL_CONFIGURATION.BOOLEAN_RESULT' IN TYPEOF(
        tree_element) THEN
      IF NOT (tree_element\boolean_result.operator IN [boolean_operator.
          union,boolean_operator.difference]) THEN
        RETURN(FALSE);
      END_IF;
      IF 'PLANT_SPATIAL_CONFIGURATION.HALF_SPACE_SOLID' IN TYPEOF(
          tree_element\boolean_result.first_operand) THEN
        IF 'PLANT_SPATIAL_CONFIGURATION.ELEMENTARY_SURFACE' IN TYPEOF(
            tree_element\boolean_result.first_operand\half_space_solid.
            base_surface) THEN
          IF 'PLANT_SPATIAL_CONFIGURATION.HALF_SPACE_SOLID' IN TYPEOF(
              tree_element\boolean_result.second_operand) THEN
            IF 'PLANT_SPATIAL_CONFIGURATION.ELEMENTARY_SURFACE' IN
                TYPEOF(tree_element\boolean_result.second_operand\
```

 © ISO 2001 — All rights reserved

```
            half_space_solid.base_surface) THEN
          RETURN(TRUE);
        ELSE
          RETURN(FALSE);
        END_IF;
      ELSE
        RETURN(valid_advanced_csg_tree(tree_element\boolean_result.
            second_operand));
      END_IF;
    ELSE
      RETURN(FALSE);
    END_IF;
  ELSE
    IF 'PLANT_SPATIAL_CONFIGURATION.HALF_SPACE_SOLID' IN TYPEOF(
        tree_element\boolean_result.second_operand) THEN
      IF 'PLANT_SPATIAL_CONFIGURATION.ELEMENTARY_SURFACE' IN TYPEOF(
          tree_element\boolean_result.second_operand\half_space_solid
          .base_surface) THEN
        RETURN(valid_advanced_csg_tree(tree_element\boolean_result.
            first_operand));
      ELSE
        RETURN(FALSE);
      END_IF;
    ELSE
      RETURN(valid_advanced_csg_tree(tree_element\boolean_result.
          first_operand) AND valid_advanced_csg_tree(tree_element\
          boolean_result.second_operand));
    END_IF;
  END_IF;
END_IF;
END_IF;
RETURN(FALSE);

END_FUNCTION; -- valid_advanced_csg_tree

FUNCTION valid_calendar_date(
        date: calendar_date
  ): LOGICAL;
CASE date.month_component OF
  1 : RETURN((1 <= date.day_component) AND (date.day_component
      <= 31));
  2 : BEGIN
      IF leap_year(date.year_component) THEN
        RETURN((1 <= date.day_component) AND (date.day_component <= 29));
      ELSE
        RETURN((1 <= date.day_component) AND (date.day_component <= 28));
      END_IF;
    END;
  3 : RETURN((1 <= date.day_component) AND (date.day_component
      <= 31));
  4 : RETURN((1 <= date.day_component) AND (date.day_component
      <= 30));
  5 : RETURN((1 <= date.day_component) AND (date.day_component
      <= 31));
```

© ISO 2001 — All rights reserved

```
    6 : RETURN((1 <= date.day_component) AND (date.day_component
        <= 30));
    7 : RETURN((1 <= date.day_component) AND (date.day_component
        <= 31));
    8 : RETURN((1 <= date.day_component) AND (date.day_component
        <= 31));
    9 : RETURN((1 <= date.day_component) AND (date.day_component
        <= 30));
    10  : RETURN((1 <= date.day_component) AND (date.
        day_component <= 31));
    11  : RETURN((1 <= date.day_component) AND (date.
        day_component <= 30));
    12  : RETURN((1 <= date.day_component) AND (date.
        day_component <= 31));
    END_CASE;
  RETURN(FALSE);

 END_FUNCTION; -- valid_calendar_date

 FUNCTION valid_measure_value
  (m : measure_value) : BOOLEAN;
  IF ('REAL' IN TYPEOF (m)) THEN
  RETURN (m > 0.0);
  ELSE
    IF ('INTEGER' IN TYPEOF (m)) THEN
      RETURN (m > 0);
    ELSE
      RETURN (TRUE);
    END_IF;
  END_IF;
 END_FUNCTION; -- valid_measure_value

 FUNCTION valid_time(
          time: local_time
    ): BOOLEAN;
  IF EXISTS(time.second_component) THEN
    RETURN(EXISTS(time.minute_component));
  ELSE
    RETURN(TRUE);
  END_IF;

 END_FUNCTION; -- valid_time

 FUNCTION valid_units(
          m: measure_with_unit
    ): BOOLEAN;
  IF 'PLANT_SPATIAL_CONFIGURATION.LENGTH_MEASURE' IN
TYPEOF(m.value_component)
  THEN
    IF derive_dimensional_exponents(m.unit_component) <>
       dimensional_exponents(1,0,0,0,0,0,0) THEN
```

 © ISO 2001 — All rights reserved

```
      RETURN(FALSE);
    END_IF;
  END_IF;
  IF 'PLANT_SPATIAL_CONFIGURATION.MASS_MEASURE' IN
TYPEOF(m.value_component)
  THEN
    IF derive_dimensional_exponents(m.unit_component) <>
       dimensional_exponents(0,1,0,0,0,0,0) THEN
      RETURN(FALSE);
    END_IF;
  END_IF;
  IF 'PLANT_SPATIAL_CONFIGURATION.TIME_MEASURE' IN
TYPEOF(m.value_component)
  THEN
    IF derive_dimensional_exponents(m.unit_component) <>
       dimensional_exponents(0,0,1,0,0,0,0) THEN
      RETURN(FALSE);
    END_IF;
  END_IF;
  IF 'PLANT_SPATIAL_CONFIGURATION.ELECTRIC_CURRENT_MEASURE' IN
TYPEOF(m.
      value_component) THEN
    IF derive_dimensional_exponents(m.unit_component) <>
       dimensional_exponents(0,0,0,1,0,0,0) THEN
      RETURN(FALSE);
    END_IF;
  END_IF;
  IF
'PLANT_SPATIAL_CONFIGURATION.THERMODYNAMIC_TEMPERATURE_MEASURE'
IN
      TYPEOF(m.value_component) THEN
    IF derive_dimensional_exponents(m.unit_component) <>
       dimensional_exponents(0,0,0,0,1,0,0) THEN
      RETURN(FALSE);
    END_IF;
  END_IF;
  IF 'PLANT_SPATIAL_CONFIGURATION.CELSIUS_TEMPERATURE_MEASURE' IN
TYPEOF(m.
      value_component) THEN
    IF derive_dimensional_exponents(m.unit_component) <>
       dimensional_exponents(0,0,0,0,1,0,0) THEN
      RETURN(FALSE);
    END_IF;
  END_IF;
  IF 'PLANT_SPATIAL_CONFIGURATION.AMOUNT_OF_SUBSTANCE_MEASURE' IN
TYPEOF(m.
      value_component) THEN
    IF derive_dimensional_exponents(m.unit_component) <>
       dimensional_exponents(0,0,0,0,0,1,0) THEN
      RETURN(FALSE);
    END_IF;
  END_IF;
  IF 'PLANT_SPATIAL_CONFIGURATION.LUMINOUS_INTENSITY_MEASURE' IN
TYPEOF(m.
```

© ISO 2001 — All rights reserved

```
      value_component) THEN
    IF derive_dimensional_exponents(m.unit_component) <>
       dimensional_exponents(0,0,0,0,0,0,1) THEN
      RETURN(FALSE);
    END_IF;
  END_IF;
  IF 'PLANT_SPATIAL_CONFIGURATION.PLANE_ANGLE_MEASURE' IN
      TYPEOF(m.value_component)
      THEN
    IF derive_dimensional_exponents(m.unit_component) <>
       dimensional_exponents(0,0,0,0,0,0,0) THEN
      RETURN(FALSE);
    END_IF;
  END_IF;
  IF 'PLANT_SPATIAL_CONFIGURATION.SOLID_ANGLE_MEASURE' IN
      TYPEOF(m.value_component)
      THEN
    IF derive_dimensional_exponents(m.unit_component) <>
       dimensional_exponents(0,0,0,0,0,0,0) THEN
      RETURN(FALSE);
    END_IF;
  END_IF;
  IF 'PLANT_SPATIAL_CONFIGURATION.AREA_MEASURE' IN
TYPEOF(m.value_component)
  THEN
    IF derive_dimensional_exponents(m.unit_component) <>
       dimensional_exponents(2,0,0,0,0,0,0) THEN
      RETURN(FALSE);
    END_IF;
  END_IF;
  IF 'PLANT_SPATIAL_CONFIGURATION.VOLUME_MEASURE' IN
TYPEOF(m.value_component)
  THEN
    IF derive_dimensional_exponents(m.unit_component) <>
       dimensional_exponents(3,0,0,0,0,0,0) THEN
      RETURN(FALSE);
    END_IF;
  END_IF;
  IF 'PLANT_SPATIAL_CONFIGURATION.RATIO_MEASURE' IN
TYPEOF(m.value_component)
  THEN
    IF derive_dimensional_exponents(m.unit_component) <>
       dimensional_exponents(0,0,0,0,0,0,0) THEN
      RETURN(FALSE);
    END_IF;
  END_IF;
  IF 'PLANT_SPATIAL_CONFIGURATION.POSITIVE_LENGTH_MEASURE' IN
TYPEOF(m.
      value_component) THEN
    IF derive_dimensional_exponents(m.unit_component) <>
       dimensional_exponents(1,0,0,0,0,0,0) THEN
```

 © ISO 2001 — All rights reserved

```
      RETURN(FALSE);
    END_IF;
  END_IF;
  IF 'PLANT_SPATIAL_CONFIGURATION.POSITIVE_PLANE_ANGLE_MEASURE' IN
TYPEOF(m.
      value_component) THEN
    IF derive_dimensional_exponents(m.unit_component) <>
       dimensional_exponents(0,0,0,0,0,0,0) THEN
      RETURN(FALSE);
    END_IF;
  END_IF;
  RETURN(TRUE);

END_FUNCTION; -- valid_units

FUNCTION vector_difference(
          arg1, arg2: vector_or_direction
   ): vector;

  LOCAL
    ndim   : INTEGER;
    mag2   : REAL;
    mag1   : REAL;
    mag    : REAL;
    res    : direction;
    vec1   : direction;
    vec2   : direction;
    result : vector;
  END_LOCAL;
  IF (NOT EXISTS(arg1)) OR (NOT EXISTS(arg2)) OR (arg1.dim <> arg2.dim)
      THEN
    RETURN(?);
  ELSE
    BEGIN
      IF 'PLANT_SPATIAL_CONFIGURATION.VECTOR' IN TYPEOF(arg1) THEN
        mag1 := arg1.magnitude;
        vec1 := arg1.orientation;
      ELSE
        mag1 := 1;
        vec1 := arg1;
      END_IF;
      IF 'PLANT_SPATIAL_CONFIGURATION.VECTOR' IN TYPEOF(arg2) THEN
        mag2 := arg2.magnitude;
        vec2 := arg2.orientation;
      ELSE
        mag2 := 1;
        vec2 := arg2;
      END_IF;
      vec1 := normalise(vec1);
      vec2 := normalise(vec2);
      ndim := SIZEOF(vec1.direction_ratios);
      mag := 0;
      res := dummy_gri || direction(vec1.direction_ratios);
      REPEAT i := 1 TO ndim BY 1;
```

© ISO 2001 — All rights reserved

```
        res.direction_ratios[i] := (mag1 * vec1.direction_ratios[i]) + (
           mag2 * vec2.direction_ratios[i]);
        mag := mag + (res.direction_ratios[i] * res.direction_ratios[i]);
      END_REPEAT;
      IF mag > 0 THEN
        result := dummy_gri || vector(res,SQRT(mag));
      ELSE
        result := dummy_gri || vector(vec1,0);
      END_IF;
    END;
  END_IF;
  RETURN(result);

 END_FUNCTION; -- vector_difference



 FUNCTION vertex_point_pcurves (a_vertex  : vertex_point;
    the_degenerates : SET OF evaluated_degenerate_pcurve)
    : SET OF degenerate_pcurve;
 LOCAL
  a_point : point;
  result  : SET OF degenerate_pcurve;
 END_LOCAL;
  a_point := a_vertex.vertex_geometry;
  result := [];
  IF 'PLANT_SPATIAL_CONFIGURATION.DEGENERATE_PCURVE' IN
TYPEOF(a_point) THEN
    result := result + a_point;
  ELSE
      REPEAT j := 1 TO SIZEOF(the_degenerates);
        IF (the_degenerates[j].equivalent_point :=: a_point)  THEN
          result := result + the_degenerates[j];
        END_IF;
      END_REPEAT;
  END_IF;

  RETURN (RESULT);
 END_FUNCTION;

END_SCHEMA; -- plant_spatial_configuration
```

 © ISO 2001 — All rights reserved

Annex B
(normative)

AIM short names of entities

Table B.1 provides the short names of entities specified in the AIM of this part of ISO 10303. Requirements on the use of the short names are found in the implementation methods included in ISO 10303.

Table B.1 - Short names of entities

Entity name	Short name
ACTION	ACTION
ACTION_ASSIGNMENT	ACTASS
ACTION_DIRECTIVE	ACTDRC
ACTION_METHOD	ACTMTH
ACTION_METHOD_RELATIONSHIP	ACMTRL
ACTION_RELATIONSHIP	ACTRLT
ACTION_REQUEST_ASSIGNMENT	ACRQAS
ACTION_REQUEST_SOLUTION	ACRQSL
ACTION_REQUEST_STATUS	ACRQST
ACTION_STATUS	ACTSTT
AMOUNT_OF_SUBSTANCE_MEASURE_WITH_UNIT	AOSMWU
AMOUNT_OF_SUBSTANCE_UNIT	AOSU
ANGULAR_LOCATION	ANGLCT
APPLICATION_CONTEXT	APPCNT
APPLICATION_CONTEXT_ELEMENT	APCNEL
APPLICATION_PROTOCOL_DEFINITION	APPRDF
APPLIED_ACTION_REQUEST_ASSIGNMENT	AARA
APPLIED_APPROVAL_ASSIGNMENT	APAPAS
APPLIED_CLASSIFICATION_ASSIGNMENT	APCLAS
APPLIED_DATE_AND_TIME_ASSIGNMENT	ADATA
APPLIED_DATE_ASSIGNMENT	APDTAS
APPLIED_DOCUMENT_REFERENCE	APDCRF
APPLIED_IDENTIFICATION_ASSIGNMENT	APIDAS
APPROVAL	APPRVL
APPROVAL_ASSIGNMENT	APPASS
APPROVAL_DATE_TIME	APDTTM
APPROVAL_PERSON_ORGANIZATION	APPROR
APPROVAL_ROLE	APPRL
APPROVAL_STATUS	APPSTT
ASSEMBLY_COMPONENT_USAGE	ASCMUS
AXIS1_PLACEMENT	AX1PLC
AXIS2_PLACEMENT_2D	A2PL2D
AXIS2_PLACEMENT_3D	A2PL3D
B_SPLINE_CURVE	BSPCR
B_SPLINE_CURVE_WITH_KNOTS	BSCWK
B_SPLINE_SURFACE	BSPSR
Entity name	**Short name**
B_SPLINE_SURFACE_WITH_KNOTS	BSSWK

© ISO 2001 — All rights reserved

BEZIER_CURVE	BZRCRV
BEZIER_SURFACE	BZRSRF
BLANK_FITTING_CLASS	BLFTCL
BLOCK	BLOCK
BOLT_AND_NUT_COMPONENT_CLASS	BANCC
BOLT_AND_NUT_COMPONENT_DEFINITION	BANCD
BOLT_AND_NUT_SET_DEFINITION	BANSD
BOOLEAN_RESULT	BLNRSL
BOUNDARY_CURVE	BNDCR
BOUNDED_	BNDCRV
BOUNDED_PCURVE	BNDPCR
BOUNDED_SURFACE	BNDSRF
BOUNDED_SURFACE_CURVE	BNSRCR
BREP_WITH_VOIDS	BRWTVD
CABLEWAY_COMPONENT_CLASS	CBCMCL
CABLEWAY_COMPONENT_DEFINITION	CBCMDF
CABLEWAY_CONNECTOR_CLASS	CBCNCL
CABLEWAY_SYSTEM	CBLSYS
CALENDAR_DATE	CLNDT
CARTESIAN_POINT	CRTPNT
CARTESIAN_TRANSFORMATION_OPERATOR	CRTROP
CARTESIAN_TRANSFORMATION_OPERATOR_3D	CTO3
CATALOGUE	CTLG
CATALOGUE_CONNECTOR	CTLCNN
CATALOGUE_ITEM	CTLITM
CENTRE_OF_SYMMETRY	CNOFSY
CHANGE_ACTION	CHNACT
CHANGE_ITEM_ID_ASSIGNMENT	CIIA
CHANGE_LIFE_CYCLE_STAGE_ASSIGNMENT	CLCSA
CHARACTERIZED_OBJECT	CHROBJ
CIRCLE	CIRCLE
CLASSIFICATION_ASSIGNMENT	CLSASS
CLASSIFICATION_ROLE	CLSRL
CLOSED_SHELL	CLSSHL
COLOUR	COLOUR
COLOUR_RGB	CLRRGB
COLOUR_SPECIFICATION	CLRSPC
COMPOSITE_CURVE	CMPCRV
COMPOSITE_CURVE_ON_SURFACE	CCOS
COMPOSITE_CURVE_SEGMENT	CMCRSG
CONIC	CONIC
CONICAL_SURFACE	CNCSRF
CONNECTED_FACE_SET	CNFCST
CONNECTION_FUNCTIONAL_CLASS	CNFNCL
CONNECTION_MATERIAL_DEFINITION	CNMTDF
CONNECTION_MOTION_CLASS	CNMTCL
CONNECTION_NODE	CNNND
Entity name	**Short name**
CONNECTOR_END_TYPE_CLASS	CET0
CONTEXT_DEPENDENT_UNIT	CNDPUN

© ISO 2001 — All rights reserved

CONVERSION_BASED_UNIT	CNBSUN
COORDINATED_UNIVERSAL_TIME_OFFSET	CUTO
CSG_SOLID	CSGSLD
CURVE	CURVE
CURVE_BOUNDED_SURFACE	CRBNSR
CURVE_REPLICA	CRVRPL
CYCLIDE_SEGMENT_SOLID	CYSGSL
CYLINDRICAL_SURFACE	CYLSRF
DATA_ENVIRONMENT	DTENV
DATE	DATE
DATE_AND_TIME	DTANTM
DATE_AND_TIME_ASSIGNMENT	DATA
DATE_ASSIGNMENT	DTASS
DATE_ROLE	DTRL
DATE_TIME_ROLE	DTTMRL
DEFINITIONAL_REPRESENTATION	DFNRPR
DEGENERATE_PCURVE	DGNPCR
DEGENERATE_TOROIDAL_SURFACE	DGTRSR
DERIVED_SHAPE_ASPECT	DRSHAS
DERIVED_UNIT	DRVUNT
DERIVED_UNIT_ELEMENT	DRUNEL
DESCRIPTION_ATTRIBUTE	DSCATT
DESCRIPTIVE_COLOUR	DSCCLR
DESCRIPTIVE_REPRESENTATION_ITEM	DSRPIT
DESIGN_PROJECT	DSGPRJ
DESIGN_PROJECT_ASSIGNMENT	DSPRAS
DIMENSIONAL_CHARACTERISTIC_REPRESENTATION	DMCHRP
DIMENSIONAL_EXPONENTS	DMNEXP
DIMENSIONAL_LOCATION	DMNLCT
DIMENSIONAL_SIZE	DMNSZ
DIRECTED_ACTION	DRCACT
DIRECTION	DRCTN
DOCUMENT	DCMNT
DOCUMENT_REFERENCE	DCMRFR
DOCUMENT_RELATIONSHIP	DCMRLT
DOCUMENT_REPRESENTATION_TYPE	DCRPTY
DOCUMENT_TYPE	DCMTYP
DOCUMENT_USAGE_CONSTRAINT	DCUSCN
DUCTING_SYSTEM	DCTSYS
ECCENTRIC_CONE	ECCCN
EDGE	EDGE
EDGE_CURVE	EDGCRV
EDGE_LOOP	EDGLP
ELBOW_FITTING_CLASS	ELFTCL
ELECTRIC_CURRENT_MEASURE_WITH_UNIT	ECMWU
ELECTRIC_CURRENT_UNIT	ELCRUN
Entity name	**Short name**
ELECTRICAL_CONNECTOR_CLASS	ELCNCL
ELECTRICAL_SYSTEM	ELCSYS
ELEMENTARY_SURFACE	ELMSRF
ELLIPSE	ELLPS
ELLIPSOID	ELLPSD
EVALUATED_DEGENERATE_PCURVE	EVDGPC

© ISO 2001 — All rights reserved

EXECUTED_ACTION	EXCACT
EXTERNAL_SOURCE	EXTSRC
EXTERNALLY_DEFINED_CLASS	EXD0
EXTERNALLY_DEFINED_DOCUMENT	EXDFDC
EXTERNALLY_DEFINED_ITEM	EXDFIT
EXTERNALLY_DEFINED_ITEM_RELATIONSHIP	EDIR
EXTERNALLY_DEFINED_PLANT_ITEM_DEFINITION	EDPID
EXTERNALLY_DEFINED_REPRESENTATION_ITEM	EDRI
EXTRUDED_AREA_SOLID	EXARSL
EXTRUDED_FACE_SOLID	EXFCSL
FACE	FACE
FACE_BOUND	FCBND
FACE_OUTER_BOUND	FCOTBN
FACE_SURFACE	FCSRF
FACETED_BREP	FCTBR
FLANGE_FITTING_CLASS	FLFTCL
FLANGE_FITTING_NECK_TYPE_CLASS	FFNTC
FOUNDED_ITEM	FNDITM
FUNCTIONALLY_DEFINED_TRANSFORMATION	FNDFTR
GEOMETRIC_CURVE_SET	GMCRST
GEOMETRIC_REPRESENTATION_CONTEXT	GMRPCN
GEOMETRIC_REPRESENTATION_ITEM	GMRPIT
GEOMETRIC_SET	GMTST
GEOMETRIC_SET_REPLICA	GMSTRP
GLOBAL_UNCERTAINTY_ASSIGNED_CONTEXT	GC
GLOBAL_UNIT_ASSIGNED_CONTEXT	GUAC
GROUP	GROUP
GROUP_ASSIGNMENT	GRPASS
GROUP_RELATIONSHIP	GRPRLT
HALF_SPACE_SOLID	HLSPSL
HEAT_TRACING_REPRESENTATION	HTTRRP
HVAC_BRANCH_CONNECTION	HVBRCN
HVAC_COMPONENT_DEFINITION	HVCMDF
HVAC_CONNECTOR	HVCCNN
HVAC_FITTING_CLASS	HVFTCL
HVAC_PLANT_ITEM_BRANCH_CONNECTION	HPIBC
HVAC_PLANT_ITEM_CONNECTION	HPIC
HVAC_CROSS_SECTION	HVCRSC
HVAC_SECTION_SEGMENT_DEFINITION	HSSD
HVAC_SECTION_SEGMENT_TERMINATION	HSST
HVAC_SYSTEM	HVCSYS
HVAC_SYSTEM_SECTION_DEFINITION	HSS0
Entity name	**Short name**
HVAC_TERMINATION_CONNECTION	HVTRCN
HYBRID_SHAPE_REPRESENTATION	HYSHRP
HYPERBOLA	HYPRBL
ID_ATTRIBUTE	IDATT
IDENTIFICATION_ASSIGNMENT	IDNASS
IDENTIFICATION_ROLE	IDNRL
INLINE_EQUIPMENT	INLEQP

© ISO 2001 — All rights reserved

INSTRUMENTATION_AND_CONTROL_SYSTEM	IACS
INTERFERING_SHAPE_ELEMENT	INSHEL
INTERSECTION_CURVE	INTCRV
ITEM_IDENTIFIED_REPRESENTATION_USAGE	IIRU
KNOWN_SOURCE	KNWSRC
LENGTH_MEASURE_WITH_UNIT	LMWU
LENGTH_UNIT	LNGUNT
LINE	LINE
LINE_BRANCH_CONNECTION	LNBRCN
LINE_LESS_PIPING_SYSTEM	LLPS
LINE_PLANT_ITEM_BRANCH_CONNECTION	LPIBC
LINE_PLANT_ITEM_CONNECTION	LPIC
LINE_TERMINATION_CONNECTION	LNTRCN
LOCAL_TIME	LCLTM
LOOP	LOOP
LUMINOUS_INTENSITY_MEASURE_WITH_UNIT	LIMWU
LUMINOUS_INTENSITY_UNIT	LMINUN
MAKE_FROM_USAGE_OPTION	MFUO
MANIFOLD_SOLID_BREP	MNSLBR
MAPPED_ITEM	MPPITM
MASS_MEASURE_WITH_UNIT	MMWU
MASS_UNIT	MSSUNT
MATERIAL_DESIGNATION	MTRDSG
MATERIAL_DESIGNATION_CHARACTERIZATION	MTDSCH
MATERIAL_PROPERTY	MTRPRP
MATERIAL_PROPERTY_REPRESENTATION	MTPRRP
MEASURE_REPRESENTATION_ITEM	MSRPIT
MEASURE_WITH_UNIT	MSWTUN
NAME_ASSIGNMENT	NMASS
NAME_ATTRIBUTE	NMATT
NAMED_UNIT	NMDUNT
OBJECT_ROLE	OBJRL
OFFSET_CURVE_2D	OFCR2D
OFFSET_CURVE_3D	OFCR3D
OFFSET_SURFACE	OFFSRF
OPEN_SHELL	OPNSHL
ORGANIZATION	ORGNZT
ORGANIZATION_ASSIGNMENT	ORGASS
ORGANIZATION_ROLE	ORGRL
ORGANIZATIONAL_PROJECT	ORGPRJ
ORIENTED_CLOSED_SHELL	ORCLSH
Entity name	**Short name**
ORIENTED_EDGE	ORNEDG
ORIENTED_FACE	ORNFC
ORIENTED_OPEN_SHELL	OROPSH
ORIENTED_PATH	ORNPTH
OUTER_BOUNDARY_CURVE	OTBNCR
PARABOLA	PRBL
PARAMETRIC_REPRESENTATION_CONTEXT	PRRPCN
PATH	PATH
PCURVE	PCURVE
PERSON	PERSON
PERSON_AND_ORGANIZATION	PRANOR

© ISO 2001 — All rights reserved

PERSON_AND_ORGANIZATION_ASSIGNMENT	PAOA
PERSON_AND_ORGANIZATION_ROLE	PAOR
PERSON_ASSIGNMENT	PRSASS
PERSON_ROLE	PRSRL
PIPE_CLASS	PPCLS
PIPE_CLOSURE_FITTING_CLASS	PCFC
PIPING_COMPONENT_CLASS	PPCMCL
PIPING_COMPONENT_DEFINITION	PPCMDF
PIPING_CONNECTOR_CLASS	PPC0
PIPING_SPOOL_DEFINITION	PPSPDF
PIPING_SUPPORT_DEFINITION	PPS0
PIPING_SUPPORT_FITTING_CLASS	PSFC
PIPING_SYSTEM	PPNSYS
PLACEMENT	PLCMNT
PLANE	PLANE
PLANE_ANGLE_MEASURE_WITH_UNIT	PAMWU
PLANE_ANGLE_UNIT	PLANUN
PLANT	PLANT
PLANT_CSG_SHAPE_REPRESENTATION	PCSR
PLANT_DESIGN_CSG_PRIMITIVE	PDCP
PLANT_ITEM_CONNECTION	PLITCN
PLANT_ITEM_CONNECTOR	PLI0
PLANT_ITEM_INTERFERENCE	PLITIN
PLANT_ITEM_ROUTE	PLITRT
PLANT_ITEM_WEIGHT_REPRESENTATION	PIWR
PLANT_LINE_DEFINITION	PLLNDF
PLANT_LINE_SEGMENT_DEFINITION	PLSD
PLANT_LINE_SEGMENT_TERMINATION	PLST
PLANT_SPATIAL_CONFIGURATION_CHANGE_ASSIGNMENT	PSCCA
PLANT_SPATIAL_CONFIGURATION_ORGANIZATION_ASSIGNMENT	PSCOA
PLANT_SPATIAL_CONFIGURATION_PERSON_AND_ORGANIZATION_ASSIGNMENT	PSCPAO
PLANT_SPATIAL_CONFIGURATION_PERSON_ASSIGNMENT	PSCPA
POINT	POINT
POINT_ON_CURVE	PNONCR
POINT_ON_SURFACE	PNONSR
POINT_REPLICA	PNTRPL
Entity name	**Short name**
POLY_LOOP	PLYLP
POLYLINE	PLYLN
PRE_DEFINED_ITEM	PRDFIT
PRECISION_QUALIFIER	PRCQLF
PRESENTATION_LAYER_ASSIGNMENT	PRLYAS
PROCESS_CAPABILITY	PRCCPB
PRODUCT	PRDCT
PRODUCT_CONTEXT	PRDCNT
PRODUCT_DEFINITION	PRDDFN
PRODUCT_DEFINITION_CONTEXT	PRDFCN
PRODUCT_DEFINITION_FORMATION	PRDFFR
PRODUCT_DEFINITION_FORMATION_RELATIONSHIP	PDFR

 © ISO 2001 — All rights reserved

PRODUCT_DEFINITION_FORMATION_WITH_SPECIFIED_SOURCE	PDFWSS
PRODUCT_DEFINITION_RELATIONSHIP	PRDFRL
PRODUCT_DEFINITION_SHAPE	PRDFSH
PRODUCT_DEFINITION_SUBSTITUTE	PRDFSB
PRODUCT_DEFINITION_USAGE	PRDFUS
PRODUCT_DEFINITION_WITH_ASSOCIATED_DOCUMENTS	PDWAD
PRODUCT_MATERIAL_COMPOSITION_RELATIONSHIP	PMCR
PROPERTY_DEFINITION	PRPDFN
PROPERTY_DEFINITION_RELATIONSHIP	PRDFR
PROPERTY_DEFINITION_REPRESENTATION	PRDFRP
PURCHASE_ASSIGNMENT	PRCASS
QUALIFIED_REPRESENTATION_ITEM	QLRPIT
QUASI_UNIFORM_CURVE	QSUNCR
QUASI_UNIFORM_SURFACE	QSUNSR
RATIO_MEASURE_WITH_UNIT	RMWU
RATIO_UNIT	RTUNT
RATIONAL_B_SPLINE_CURVE	RBSC
RATIONAL_B_SPLINE_SURFACE	RBSS
RECTANGULAR_COMPOSITE_SURFACE	RCCMSR
RECTANGULAR_PYRAMID	RCTPYR
RECTANGULAR_TRIMMED_SURFACE	RCTRSR
REDUCER_FITTING_CLASS	RDFTCL
REFERENCE_GEOMETRY	RFRGMT
REINFORCING_COMPONENT_DEFINITION	RNCMDF
REPARAMETRISED_COMPOSITE_CURVE_SEGMENT	RCCS
REPRESENTATION	RPRSNT
REPRESENTATION_CONTEXT	RPRCNT
REPRESENTATION_ITEM	RPRITM
REPRESENTATION_ITEM_RELATIONSHIP	RPITRL
REPRESENTATION_MAP	RPRMP
REQUIRED_MATERIAL_PROPERTY	RQMTPR
RESERVED_SPACE	RSRSPC
REVOLVED_AREA_SOLID	RVARSL
REVOLVED_FACE_SOLID	RVFCSL
RIGHT_ANGULAR_WEDGE	RGANWD
RIGHT_CIRCULAR_CONE	RGCRCN
Entity name	**Short name**
RIGHT_CIRCULAR_CYLINDER	RGCRCY
ROLE_ASSOCIATION	RLASS
SEAM_CURVE	SMCRV
SHAPE_ASPECT	SHPASP
SHAPE_ASPECT_DERIVING_RELATIONSHIP	SADR
SHAPE_ASPECT_RELATIONSHIP	SHASRL
SHAPE_DEFINITION_REPRESENTATION	SHDFRP
SHAPE_DIMENSION_REPRESENTATION	SHDMRP
SHAPE_REPRESENTATION	SHPRPR
SHELL_BASED_WIREFRAME_MODEL	SBWM
SI_UNIT	SUNT
SITE	SITE
SITE_BUILDING	STBLD
SITE_FEATURE	STFTR
SITE_REPRESENTATION	STRPR
SITED_PLANT	STDPLN

© ISO 2001 — All rights reserved

SOLID_ANGLE_MEASURE_WITH_UNIT	SAMWU
SOLID_ANGLE_UNIT	SLANUN
SOLID_MODEL	SLDMDL
SPACER_FITTING_CLASS	SPFTCL
SPECIALTY_ITEM_CLASS	SPITCL
SPHERE	SPHERE
SPHERICAL_SURFACE	SPHSRF
STREAM_DESIGN_CASE	STDSCS
STREAM_PHASE	STRPHS
STRUCTURAL_LOAD_CONNECTOR_CLASS	SLCC
STRUCTURAL_SYSTEM	STRSYS
SUPPORT_CONSTRAINT_REPRESENTATION	SPCNRP
SURFACE	SRFC
SURFACE_CURVE	SRFCRV
SURFACE_OF_LINEAR_EXTRUSION	SL
SURFACE_OF_REVOLUTION	SROFRV
SURFACE_PATCH	SRFPTC
SURFACE_REPLICA	SRFRPL
SWAGE_FITTING_CLASS	SWFTCL
SWEPT_AREA_SOLID	SWARSL
SWEPT_FACE_SOLID	SWFCSL
SWEPT_SURFACE	SWPSRF
SYMMETRIC_SHAPE_ASPECT	SYSHAS
SYSTEM_CLASS	SYSCLS
SYSTEM_SPACE	SYSSPC
THERMODYNAMIC_TEMPERATURE_MEASURE_WITH_UNIT	TTMWU
THERMODYNAMIC_TEMPERATURE_UNIT	THTMUN
TIME_MEASURE_WITH_UNIT	TMWU
TIME_UNIT	TMUNT
TOPOLOGICAL_REPRESENTATION_ITEM	TPRPIT
TOROIDAL_SURFACE	TRDSRF
TORUS	TORUS
Entity name	**Short name**
TRIMMED_CURVE	TRMCRV
TYPE_QUALIFIER	TYPQLF
UNCERTAINTY_MEASURE_WITH_UNIT	UMWU
UNIFORM_CURVE	UNFCRV
UNIFORM_SURFACE	UNFSRF
VALVE_CLASS	VLVCLS
VECTOR	VECTOR
VERSIONED_ACTION_REQUEST	VRACRQ
VERTEX	VERTEX
VERTEX_LOOP	VRTLP
VERTEX_POINT	VRTPNT
VERTEX_SHELL	VRTSHL
WIRE_SHELL	WRSHL

© ISO 2001 — All rights reserved

Annex C
(normative)

Implementation method-specific requirements

The implementation method defines what types of exchange behaviour are required with respect to this part of ISO 10303. Conformance to this part of ISO 10303 shall be realized in an exchange structure. The file format shall be encoded according to the syntax and EXPRESS language mapping defined in ISO 10303-21 and the AIM defined in annex A of this part of ISO 10303. The header of the exchange structure shall identify the use of this part of ISO 10303 by the schema name `plant_spatial_configuration'.

© ISO 2001 — All rights reserved

Annex D
(normative)

Protocol Information Conformance Statement proforma

This clause lists the optional elements of this part of ISO 10303. An implementation may chose to support any combination of this optional elements. However, certain combinations of options are likely to be implemented together. These combinations are called conformance classes and are described in the subclauses of this annex.

This annex is in the form of a questionnaire. This questionnaire is intended to be filled out by the implementor and may be used in preparation for conformance testing by a testing laboratory. The completed PICS proforma is referred to as a PICS.

Four conformance classes are identified in this part of ISO 10303. A conforming implementation shall support at least one conformance class. Each class specifies a subset of the AIM constructs in this part of ISO 10303. These classes are detailed in clause 6 of this part of ISO 10303.

Questions:

1. Please provide an identifier for the product or system for which conformance is claimed:

    Product name and current version number:_____

2. Please indicate the implementation method chosen:

    — ISO 10303-21 Exchange Structure -- preprocessor
    Preprocessor name and current version number:_____

    — ISO 10303-21 Exchange Structure -- postprocessor
    Postprocessor name and current version number:_____

3. Please indicate the classes for which conformance is claimed:

    — Class 1:_____

    — Class 2:_____

    — Class 3:_____

    — Class 4:_____

 © ISO 2001 — All rights reserved

Annex E
(normative)

Information object registration

E.1 Document identification

To provide for unambiguous identification of an information object in an open system, the object identifier

{ iso standard 10303 part(227) version(0) }

is assigned to this part of ISO 10303. The meaning of this value is defined in ISO/IEC 8824-1, and is described in ISO 10303-1.

E.2 Schema identification

To provide for unambiguous identification of the schema specifications given in this application protocol plant_spatial_configuration in an open information system, object identifiers are assigned as follows:

{ iso standard 10303 part(227) version(0) object(1) plant-spatial-configuration(1) }

is assigned to the plant_spatial_configuration expanded schema (see annex A).

{ iso standard 10303 part(227) version(0) object(1) plant-spatial-configuration-schema(2)}

is assigned to the plant_spatial_configuration short form schema (see 5.2).

The meaning of these values is defined in ISO/IEC 8824-1, and is described in ISO 10303-1.

© ISO 2001 — All rights reserved

Annex F
(informative)

Application activity model

The application activity model (AAM) is provided as an aid to understanding the scope and information requirements defined in this application protocol. The model is presented as a set of activity figures that contain the activity diagrams and a set of definitions of the activities and their data.

F.1 Application activity model definitions and abbreviations

The following terms are used in the application activity model. Terms marked with an asterisk are outside the scope of this application protocol.

The definitions given in this annex do not supersede the definitions given in the main body of the text.

The viewpoint of the AAM is the users of plant spatial configuration information, including owner, architect, engineer, and builder.

F.1.1 analyze final plant design (AAM A245): examine all aspects of final design for compliance to performance criteria and generate any necessary changes required to meet these criteria.

F.1.2 as-built documents*: site plans, detailed equipment descriptions, electrical instrumentation diagrams, and P&IDs that record the actual condition of a plant at a specific point in time.

NOTE These documents aid in meeting government documentation and safety requirements. Frequently, they are simply corrections or modifications to existing design documents delivered to construction.

F.1.3 authorization plan*: high level plan, justification, and forecast for design and construction of a plant. The authorization plan describes how funds, people, and resources are to be allocated for the plant project.

NOTE It is a document used internally and is sometimes called a white paper.

F.1.4 automation tools*: the collection of software and hardware tools used to assist the activities involved in the life cycle of a process plant.

F.1.5 basic laws*: those elements of natural and human laws affecting any activity in the life cycle of a process plant.

EXAMPLE These laws include operating rules and guidelines as established by U.S. federal regulatory agencies such as the Occupational Safety and Health Administration (OSHA), the Environmental Protection Agency (EPA), and the Food and Drug Administration (FDA).

 © ISO 2001 — All rights reserved

F.1.6 bids*: commercial proposal by supplier for provision of equipment, supplies, or services.

F.1.7 calculate heat and mass balance* (A212): calculations performed based on design basis, unit operations, fuel or materials in the process, along with associated chemical properties to optimize plant and operational cost.

F.1.8 capital appropriation*: authorization of funding for capital project or expenditure.

F.1.9 change request: a request made by an user of data to revise the original or current version of something due to errors, omissions, or other reasons, such as new requirements.

NOTE 1 A request is followed by review, analysis, and approval. Change requests are tracked in terms of cost and schedule (a kind of mini-project within project).

NOTE 2 Change requests may be made against a supplier list, process, plant, procedure, and design basis.

NOTE 3 Change request originators include construction and operations.

F.1.10 change request (design): a request made by an user of data to revise the original or current version of the design of something due to errors, omissions, or other reasons.

F.1.11 change request (plant): a request made by an user of data to revise the original or current version of the design of the plant due to errors, omissions, or other reasons.

F1.12 change request (procedure): a request made by an user of data to revise the original or current version of a procedure due to errors, omissions, or other reasons.

F.1.13 change request (supplier list): a request made by an user of data to revise the original or current version of the supplier's list due to errors, omissions, or other reasons.

F.1.14 chemical properties*: chemical data needed by the process engineer during design.

NOTE - This data includes, but is not limited to:

— boiling point;

— critical pressure;

— critical temperature;

— density;

— enthalpy;

— entropy;

— flash point;

— heat of vapourization;

— melting point;

© ISO 2001 — All rights reserved

— molecular weight;

— specific heat;

— thermal conductivity;

— viscosity.

F.1.15 codes: widely recognized, accepted, and sometimes legally mandated rules that apply during the life-cycle of the plant. These rules govern life-cycle activities such as design, fabrication, and operation, and characteristics such as safety. Codes are consensus documents and specifications and are sometimes a subset of regulatory requirements.

EXAMPLE The ANSI 31.x series of codes.

NOTE The design basis data specified will guide the code application, i.e., how the code is applied. (ANSI 31.3 allows overpressurizing for short periods of times to accommodate specific design basis scenarios.)

F.1.16 commission plant* (AAM A46): test the functionality of the completed plant prior to operation, develop final operating and maintenance procedures, and obtain final regulatory approval to operate the plant.

F.1.17 commissioned plant*: a plant that has been proven to be operational through commissioning procedures.

F.1.18 commissioning procedures*: step-by-step explanation of start-up actions required to commission the plant.

F.1.19 company requirements: those managerial decisions that place constraints on the operations of the company, that give direction or emphasis on areas for development, or that dictate decisions outside the local decision making paths. The embodiment of policies and regulations that govern the operations of a company.

F.1.20 confirm safety and regulatory compliance (AAM A244): establish that the final design of the plant meets specified safety and regulatory criteria.

F.1.21 construct and commission plant* (AAM A4): the process of building or retrofitting a physical plant, using plans and building materials. The layout drawings and material requirements are used to establish the physical arrangement and to procure the materials required. A plan for erecting the plant is determined from material schedules, heavy equipment schedules, labor schedules, and environmental conditions (such as weather). Temporary erection material (such as scaffolding) is procured as needed. Regulatory requirements and client requirements are used to plan and erect the plant, and for the final testing and certification for operation. The result is a completed plant that meets the testing procedures defined in the project control and approval documentation.

F.1.22 construction design specification*: a contractual document that gives the criteria and standards to be used in the construction of the plant.

 © ISO 2001 — All rights reserved

EXAMPLE The specification contents include detailed construction drawings, plant layout, equipment lists, isometric models, piping and instrumentation diagrams, specifications for the construction phase of the project, and pre-commissioning, acceptance and approval, and testing procedures.

F.1.23 construction documentation*: all information related to the construction of the process plant.

EXAMPLE Documentation includes as-built reports, equipment certification, nameplate information of installed equipment, operating manuals, testing procedures, field changes, and photographs of as-built units, modules, and plant.

F.1.24 construction plan*: a description of the method(s) to be used for building or fabricating a plant or plant item.

F.1.25 construction services*: constructor activities and abilities to be used to construct the plant.

F.1.26 control and approve activities* (AAM A11): prepare plans, check conformance to plans, and arrange for any corrective actions.

F.1.27 control requirements*: requirements and criteria specified in operating procedures and safety requirements imposed on the mechanisms and systems that monitor and control plant operation.

F.1.28 corporate standards: procedures, instructions, or specifications that may be used in the execution of a plant project and are standardized within an organization. Corporate standards are not project specific, but may be used (and possibly customized) by a variety of projects. Corporate standards are developed over a long period of time as standard, recommended, or best practice.

EXAMPLE Kinds of standards include safety, design, and maintenance.

F.1.29 decommission and dispose of plant* (AAM A6): the activities during which the plant is decommissioned, disassembled, and the site either prepared for a new plant or returned to a state specified by the regulatory agencies. Records of the disposal of toxic and hazardous waste together with the location of any holes and the methodology used to plug them are produced and stored in accordance with approved procedures and guidelines.

F.1.30 decommission plant* (AAM A61): plan and complete the activities required to decommission the plant.

F.1.31 define plant operating philosophy* (AAM A231): ascertain and confirm those plant operating characteristics and activities necessary to achieve the plant owner's operational goals such as methods of production, technology, plant safety, or plant availability. This activity includes selecting types and sequences of unit operations and processing steps so that the plant production objectives can be achieved and specifying alternate or abnormal operating conditions, and procedures such as startup and shutdown.

F.1.32 define procedures, standards, guidelines, specifications, and codes* (AAM A13): specify the engineering policies to be used and determine appropriate procedures, codes, standards, guidelines, and specifications that may apply.

© ISO 2001 — All rights reserved

F.1.33 delivery dates*: scheduled date for delivery of procured items to meet or support construction.

F.1.34 deploy component or service* (AAM A35): the process whereby the part or service is delivered and the acquisition agreement is fulfilled.

F.1.35 design basis: a document provided by the plant owner or developed by the architecture, engineering, and construction (AEC) contractors that establishes or defines the information and data that Plant engineering is to be based upon. It consists of guidelines and requirements, corporate standards, codes, references to regulatory agreements, form of deliverables, and plant or production capacity.

EXAMPLE The design basis includes:

— design safety philosophy;

— environmental requirements;

— plant inputs (e.g., fuel, feedstock);

— plant license and permit requirements;

— plant operating requirements;

— plant process requirements;

— plant product or output (type and capacity);

— site parameters (geographical, meteorological, soils, hydrological);

— type of plant.

It also addresses performance objectives for the plant such as:

— capacity;

— engineering quality;

— environmental;

— investment and project economics;

— safety and health;

— schedule;

— product and plant quality;

— product and raw material storage;

— project execution;

 © ISO 2001 — All rights reserved

— technology.

NOTE 1 Performance objectives usually take the form of a written document owned and maintained by the project team (consisting of members from the business, engineering, construction, and plant site).

NOTE 2 The definition for design basis is from an owner's perspective.

F.1.36 design and engineer plant (AAM A2): the activities required to develop an appropriations request and generate a construction design specification for some modification to an existing process plant or the construction of a new process plant.

NOTE The appropriation request is submitted to company management for approval. Upon approval, the construction design specification is generated.

F.1.37 design strategy*: a description of major steps required to complete enough design to obtain a budget estimate for business calculations as well as to begin the identification of process unknowns that may or may not require piloting. It encompasses building technology, mechanical technology, utility technology, automation technology, schedules, scope, standards and regulations, process definition, control philosophies, costs, benefits and timings, and project approach (e.g., architectural engineering, construction management, internal).

F.1.38 disassembled plant*: all equipment items remaining after the disposal of a process plant.

F.1.39 disposal documentation*: all information related to the disposal of the process plant including acceptance and approval procedures used in disposing all hazardous materials, residues, insulation, wiring, piping, vessels, rotating equipment, site cleanup and restoration reports, and photographs.

F.1.40 dispose of plant* (AAM A62): plan and complete the activities required to dispose of the plant.

F.1.41 energy*: all utilities required in the production of useful products through the operation of a process plant.

F.1.42 engineer and design equipment (AAM A223): preliminary sizing of all major pieces of required equipment is made at this time with enough detail to obtain budget quotes.

EXAMPLE This includes equipment such as refrigeration machines, purchase power substations, secondary substations, switch gear, compressors, and boilers, as well as the major process equipment specific to the plant.

F.1.43 engineer and design plant systems (AAM A222): at the conceptual level, this is a preliminary scoping of all major modifications or additions to major plant distribution systems such as steam, compressed air, electrical power, refrigeration, water, firewater, and sewers (storm, process, sanitary). Impact on distribution pipe lines and feeder systems quantity and size are also included. A consideration of system operation in terms of reliability, uptime, planned maintenance, and winter and summer operations are vital to proper planning.

© ISO 2001 — All rights reserved

F.1.44 engineering design, construction, and operation changes: changes to the design of the plant arising from errors, omissions, new requirements, or other reasons during plant design, construction, or operation.

F.1.45 environmental impact assessment*: evaluation of project's or plant's affect on the environment.

NOTE A report is usually required by an environmental regulatory agency before construction can begin.

F.1.46 equipment characteristics (functional): describe or specify the functional requirements for the equipment: what it is supposed to do. They are items of information that describe: the service provided to the process by the equipment.

EXAMPLE For a pump, such information might include a descriptive name or title, such as 1502-B Condensate Return Pump B.

F.1.47 equipment characteristics (performance): describe or specify the performance requirements for the equipment: how much it is supposed to do it. They are items of information that describe the effect that equipment has on the process or other operational information.

EXAMPLE For a pump, such information might include flow rate, total developed head, and efficiency.

F.1.48 equipment characteristics (process): a subset of equipment functional data that describe the contribution to the process desired from equipment. Such data is specified prior to the actual selection of specific equipment to fulfill the purpose.

F.1.49 equipment characteristics (required): needed functional, performance, physical, or process attributes of an item that have a name and measurable value.

F.1.50 equipment id: an identifier assigned to a piece of equipment.

F.1.51 equipment list: a list of equipment in the process plant.

EXAMPLE An equipment list is comprised of, but not limited to:

— contract numbers (e.g., purchase, install);

— drawing references (e.g., P&IDs, plant arrangements);

— electrical load and type;

— identifier (e.g., tag);

— location (e.g., building, elevation, area, column row);

— name;

— service requirements (e.g., air, water, structural base, electrical power, control circuitry);

 © ISO 2001 — All rights reserved

— spare requirements.

NOTE The equipment list may not include all equipment. It does not include miscellaneous equipment and devices (e.g., y-pattern strainers, inline flow meters, instruments) or valves.

F.1.52 erect plant* (AAM A43): utilizing plans, materials, services and labor, build a physical plant that conforms to the detailed design.

NOTE This process begins with the site preparation; grading and primary foundations poured, and temporary roads and rails created. Utility services are provided and temporary warehouses are built.

Major equipment is moved, often in pieces, and installed on foundations with supporting steel. Site permanent buildings are built, as are pipe racks and other permanent steel. Pipe runs and pipe spools are put in place with valves and miscellaneous equipment and welded or joined. Other items such as ducting, electrical, instrumentation are installed.

F.1.53 establish initial process control logic* (AAM A214): document philosophical and operational requirements between instrumentation, equipment and process.

F.1.54 establish plant design basis* (AAM A16): the activity of collecting a complete and consistent set of constraints, requirements, and guidelines for subsequent engineering activities.

NOTE This activity results in the development of the design basis documents. See Design Basis.

F.1.55 evaluate bids and negotiate purchase* (AAM A33): the process whereby bid packages are evaluated, a supplier is selected, and an agreement is entered into for the acquisition of the plant item(s).

F.1.56 finalize layout, arrangement, and spatial design (AAM A242): develop the spatial design of the plant to its final approved-for-construction state utilizing the finalized system design as the primary input.

F.1.57 finalize system design (AAM A241): develop the system design, expressed by flow and control information and equipment performance data, to its final state.

NOTE The resulting design serves as a basis for detailed plant design.

F.1.58 guidelines and requirements: specifications, instructions, and mandates specified by management that shall be followed in the plant project. These guidelines and requirements may be project specific. Guidelines are more generally applicable than requirements, which tend to be specific in terms of what must be done.

NOTE - Originators and users of guidelines and requirements are:

— architectural and engineering;

— construction management;

— constructor;

— contractor (basic practices);

© ISO 2001 — All rights reserved

— engineering and construction;

— engineering, procurement, and construction;

— owner.

These categories are not mutually exclusive.

F.1.59 heat and mass calculations*: calculations performed based on design basis, unit operations, fuel or materials in the process, along with associated chemical properties to optimize plant and operational cost.

F.1.60 identify and analyze safety requirements and hazards* (AAM A215): review design basis, unit operations, heat and mass balances, materials, identified equipment, control logic and process flow diagrams against federal, state and local regulations, codes and standards to determine compliance and produce an analysis of results.

F.1.61 identify and define unit operations* (AAM 211): incorporate the design basis and owner requirements to define and document the basis for conceptual process design and estimated time and cost expenditures. If the design activity is related to an existing plant, then existing operations are incorporated into the conceptual process design.

F.1.62 identify and size equipment* (AAM A213): identify equipment requirements based on the design basis and unit operations. Sizing of the equipment is based on the heat and mass balance calculations and unit operations.

F.1.63 identify plant performance requirements and establish design strategy (AAM A221): define a quantitative description of the quantity and quality of a product to be produced by the plant in a yearly time period and describe the major steps required to complete enough design to obtain a budget estimate for business calculations as well as to begin the identification of process unknowns.

NOTE Performance requirements are usually stated as units of product per unit time.

EXAMPLE Additional qualifications are typically made regarding the quality of the plant. Examples include time between major shutdowns for continuous processes, percent uptime required, and expected yield.

F.1.64 information databases: those elements of information collections comprising literature references, physical and transport properties, symbology sets, equipment specifications, and equipment costs that assist in the conception, design, construction, operation, and disposal of a process plant.

F.1.65 initial information: any knowledge available at the start of the process to build or modify a process plant.

EXAMPLE This includes information about the site, regulatory agreements, owner requirements, and approved suppliers.

F.1.66 innovation: new ideas and concepts generated internally or through the public domain to solve problems or to enhance the quality of work.

 © ISO 2001 — All rights reserved

NOTE Some ideas and concepts may become goods, services, and systems that there is a societal requirement for. To some degree, innovation is fundamental to all activities involved with the process, however, particular emphasis is placed on activities that require generation of new ideas and concepts from abstract entities as inputs.

F.1.67 inspection plan*: the description of anticipated activities necessary for surveillance of suppliers, fabricators, and assemblers to verify compliance to contractual specifications, codes, and good practice.

NOTE The plan usually lists the items to be inspected, the place where the inspections are expected to occur, anticipated frequency of inspection and type of activity to be undertaken at each inspection. The reporting procedure for the surveillance results is usually included in the developed inspection plan.

F.1.68 inspection requirements*: requirements imposed by a regulatory agency related to the inspection of the plant during the decommissioning process.

F.1.69 inspection results*: reports that result from inspection and supplier surveillance activities.

F.1.70 layout plant (AAM A224): a general arrangement of the plant in plan view, showing all the major components of the distribution systems affected by the plant and the location of the plant. A general arrangement of all major equipment within the battery limits of the plant is also included.

F.1.71 licensed technologies: patented or proprietary processes or design information purchased or licensed from an outside source, such as a process processor, supplier, or fabricator.

NOTE This technology may range from laboratory synthesis data through unit operation process data to complete, detailed plant designs or equipment items and modules.

F.1.72 line schedule and list: a subset of information presented on the P&ID, and possibly the heat and mass balance, that describes the characteristics of pipelines required for a given process.

NOTE This information is used by the piping designer during the detail design. It is analogous to the equipment list.

F.1.73 maintain plant* (AAM A53): conduct and monitor the activities required to maintain the plant.

F.1.74 maintain suppliers list* (AAM A31): the process whereby a list of accepted or approved suppliers is kept up to date.

F.1.75 manage and plan project* (AAM A1): managing the project requires that sufficient resources be provided to execute the project and check that the execution is done in accordance with the plans and regulations. Planning the project is the activity that establishes a detailed technical plan and a financial plan that are consistent with the engineering, construction, and commissioning activities required to fulfill the project objectives.

F.1.76 manage plant* (AAM A51): direct and administrate the operations, maintenance, and disposal of the plant.

© ISO 2001 — All rights reserved

F.1.77 manage, operate, and maintain plant* (AAM A5): the activities required to manage, operate, and maintain the plant safely, efficiently, and according to operating procedures and regulations.

F.1.78 management authorizations and controls*: management authorization, imperatives, directives, and procedures for initiating and executing plant management activities.

F.1.79 obtain agreements with regulatory bodies* (AAM A15): the activity of confirming that the intended design, construction, commissioning, operation, and decommissioning of the proposed project will comply with requirements of the regulatory body. This confirmation is recorded by formal documentation such as written agreements and safety compliance reports.

F.1.80 obtain construction services* (AAM A42): use the construction plan as a requirements list for outside services needed and their schedule. Negotiate contracts and agreements with sub-contractors, equipment suppliers, and labour unions as needed for the erection of the plant. Adjust the schedule of the construction plan to allow for the availability of sub-contractors, equipment and labour.

F.1.81 operate plant* (AAM A52): conduct and monitor the activities required to operate the plant.

F.1.82 operating philosophy*: the plant owner's operational goals.

EXAMPLE Operational goals include methods of production, technology, plant safety, and plant availability.

F.1.83 operating procedures*: documentation that covers many different phases and aspects of plant operation that is necessary to run the plant safely.

F.1.84 optimize for environment* (AAM A236): evaluate the plant design against the applicable environmental regulations (Federal, State, and local) and modify the design where required.

NOTE These regulations influence many of the activities in plant and process design such as operating procedures, plant and process control strategies, specification and design of piping, instrumentation, and equipment, as well as site selection. Broad regulatory interpretations often mean that conservative measures are incorporated in plant design.

F.1.85 owner requirements: an initial statement of plant requirements provided by the owner.

NOTE Owner requirements are an aggregation of items such as design requirements and client general specifications. The owner requirements may be provided at any level of abstraction from very general to very specific.

F.1.86 perform process plant life-cycle activities (AAM A0): the completion of all tasks involved in the life cycle of a process plant from conception through final disposal.

NOTE 1 These tasks include:

 © ISO 2001 — All rights reserved

— conception;

— research;

— design;

— construction;

— operation;

— maintenance;

— retrofit;

— disposal.

NOTE 2 Major outputs from the life-cycle activities are contractual documents, regulatory compliance information, data retained beyond the life time of the plant, useful products generated by the operation of the plant, and residual materials remaining in the environment upon completion of the plant life cycle. These residual materials include waste products generated while producing the product(s) and the disassembled plant.

F.1.87 personnel*: the individuals responsible for performing the life-cycle activities of the process plant.

EXAMPLE These individuals include discipline experts, skilled workers, and labourers.

F.1.88 piping and instrumentation diagram (P&ID): a schematic diagram that shows engineering details of the equipment, instruments, pipes, valves, and their connectivity and sequence.

F.1.89 piping and instrumentation diagram (AFD): the process definition is firm. Instrumentation needs to be added.

F.1.90 piping and instrumentation diagram (design): instrumentation details are included. All lines and valves have been sized. All valving, vents and drains are included. Instrumentation and loops are indicated, but final instrumentation may not have been selected.

F.1.91 piping and instrumentation diagram (final): the complete P&ID has been approved for release by engineering for construction and has been stamped by a registered professional engineer. It is a last version of the design P&ID. It contains all changes that were incorporated during the physical design of the systems. It reflects the plant as it was, or will be, constructed.

F.1.92 piping and instrumentation diagram (preliminary): conveys the flow of the fluids from equipment to equipment in the system. It shows the valves that are used to control the flow. The major fluid containing lines have been sized.

F.1.93 plan and analyze project finances* (AAM A14): the activity of anticipating and estimating the financial resource requirements for a project. This activity establishes the expected financial performance for the project and the project financial plan.

© ISO 2001 — All rights reserved

F.1.94 plant: a portion of an installation (or the entire installation) required to operate to produce products.

EXAMPLE Products produced include chemicals, pharmaceuticals, electrical power, petroleum, and similar products.

F.1.95 plant design documentation: all documents related to the process of designing the process plant.

NOTE Plant design documents include the approved design methodologies, basic data describing physical properties and their correlations used in the design, kinetic data and kinetic models used in the design, corrosion data and methodology used in selecting materials of construction, supplier performance data, capital and operating cost estimates, and appropriations requests.

F.1.96 plant items: an item or piece of equipment that may be used as a component of the plant.

F.1.97 plant life-cycle documentation: the collection of all project management, design, contractual, regulatory, and disposal documents produced during the life cycle of a process plant.

NOTE This includes all data retained past the end of the plant life cycle.

F.1.98 plant operation and maintenance documentation*: the collection of documents relating to the operation and maintenance of process plant.

NOTE These documents include operating records and plant data, safety and accident reports, maintenance reports, disposal records for all residual materials generated during the operation of the plant, and economic information related to product sales.

F.1.99 plant performance requirements: a quantitative description of the quantity and quality of a product to be produced by the plant in a yearly time period.

NOTE Performance requirements are usually stated as units of product per unit time. Additional qualifications are made regarding the quality of the Plant, such as time between major shutdowns for continuous processes, percent uptime required, and expected yield.

F.1.100 plant records*: the documentation of information related to plant disposal, restoration, turnover, and regulatory approvals.

F.1.101 pre-commission plant* (AAM A45): resolve any differences between the detailed design and the as-built plant, perform all testing required by regulatory agencies and the client, resolve any problems that were discovered during testing, and obtain regulatory permission to start-up the plant for functional testing.

F.1.102 pre-commissioned plant*: a plant that is completed and ready for check out. Mechanical systems are complete, transfer of ownership and operation remain.

F.1.103 prepare bid packages and solicit bids* (AAM A32): the process whereby the technical and commercial requirements for a plant item are compiled and sent out for pricing by multiple suppliers.

 © ISO 2001 — All rights reserved

F.1.104 process control logic*: prose or diagrammatic explanation of mechanisms or systems that monitor and control a process.

F.1.105 process control logic (preliminary)*: initial prose or diagrammatic explanation of mechanisms or systems that monitor and control a process developed during conceptual process design.

F.1.106 process flow diagram (PFD): a schematic document describing the equipment units and their interconnections, major process control functions, and major stream characteristics including physical and transport properties, material flows, and energy flows.

F.1.107 procure goods and services* (AAM A3): the process whereby needed plant items, equipment, or services are purchased or acquired.

F.1.108 procured item*: plant item that has been obtained from a supplier for incorporation into the plant.

NOTE States or status of procured items include:

— in_fabrication;

— accepted;

— shipped;

— delivered_to_site.

F.1.109 produce as-built surveys* (AAM A44): the completed plant is given a physical inspection to determine whether the plant conforms to the detailed design. The detail design drawings and other documents are updated to reflect the changes to the plant discovered during the inspection.

F.1.110 produce conceptual plant design (AAM A22): the activity of extending the conceptual process design into a preliminary plant spatial configuration.

F.1.111 produce conceptual process design* (AAM A21): the activity of defining the basic parameters of a plant flow scheme.

F.1.112 produce conceptual safety engineering designs (AAM A225): create designs that specifically address how the major hazards associated with the new plant are to be dealt with to ensure the safety of all personnel working in the plant as well as the general site and surrounding neighborhood population.

NOTE These hazards will have been identified during the preliminary screening reviews to identify chemical, fire and health hazards associated with the specific chemical or mechanical characteristics of the process.

F.1.113 produce construction plans* (AAM A41): using site drawings, layout drawings, and other documents, determine the desired sequence for building the plant that will meet contract budget and schedule. Determine those services that will be needed from sub-contractors for the site preparation, erection, and testing of the plant. Develop detailed erection drawings and schedules for each section of the plant and for temporary structures.

© ISO 2001 — All rights reserved

F.1.114 produce final plant design (AAM A24): the activities required to generate a construction design specification from the process plant requirements.

NOTE The activities include designing the mechanical, electrical, and civil engineering systems of the process, designing the detailed instrumentation systems, producing piping and instrumentation diagrams and detailed equipment layout through isometric drawings or three-dimensional computer-aided design (CAD) models.

F.1.115 produce final process design* (AAM A23): integration of conceptual process and plant designs to fully define parameters of a plant flow scheme.

F.1.116 produce process flow diagrams* (AAM A216): production of a schematic showing basic process flow developed from the cumulative results of unit operations, equipment sizing, initial logic and safety requirements along with related chemical properties.

NOTE If a design activity is related to a modification or addition to an existing plant, then the existing plant information is reflected in the developed process flow diagram.

F.1.117 project authorizations and controls*: management authorization, imperatives, directives, and procedures for initiating and executing project activities.

F.1.118 project control and approval documentation: a set of documents that define the standard procedures, standard software modules, or standard forms adopted to ensure that all activities in the project comply with organizational constraints. The documents indicate how all activities are to be implemented and approved and identify all constraints that must be met.

NOTE The constraints include financial limitations, accounting, legal and regulatory restrictions, socio-economic factors, and business practices throughout the plant life cycle.

F.1.119 project financial plan*: document that states how much the plant will cost to construct, how it is to be paid for, and when payments are to be made. It is a general financing and cash flow document.

F.1.120 project-specific documents: procedures, standards, guidelines, specifications, and codes created specifically for the plant project. These documents may call out, add to, modify, or tailor a standard. Portions of these documents are derived from the design basis.

NOTE Project-specific documents evolve through stages like P&IDs and other design documentation.

F.1.121 provide resources* (AAM A12): acquire and deploy personnel, tools, and funding to perform the project activities.

F.1.122 purchase agreement*: contract between two parties to provide a service or item for a designated payment.

F.1.123 qualified construction firms*: list of construction firms that are capable and acceptable to construct the plant.

F.1.124 receive, inspect, and disposition components* (AAM A34): the process of receiving equipment and materials from various suppliers at the process plant, inspecting the equipment and

 © ISO 2001 — All rights reserved

material for compliance to the purchase specification, and either placing the equipment or material in stock, delivering it to construction or maintenance, or returning it to the supplier.

F.1.125 regulatory agreements*: mutual agreement between the owner or operators and regulatory agencies.

F.1.126 regulatory authorizations*: approval from regulatory agencies to initiate activities.

F.1.127 regulatory requirements: federal, state, or local laws, codes, or standards that impact various activities related to the process plant.

NOTE Regulatory requirements may apply to, but are not limited to, permitting, engineering, construction, operations and decommissioning.

F.1.128 request for management approval: a document submitted to management requesting either approval to continue a particular activity of the project or requesting the procedure to use to solve a particular problem.

NOTE Approval requests may, at times, include a request that the company appropriate monies for a particular activity.

F.1.129 residual materials*: all chemicals and equipment, excluding useful products, remaining in the environment at the end of the plant life cycle.

F.1.130 resources*: the technology, people, and tools used to carry out the plant life-cycle activities.

F.1.131 resources (existing)*: currently available technology, people, and tools used to carry out the plant life-cycle activities.

F.1.132 safety and hazardous operations analysis*: the results of the evaluation of the plant design with respect to safety and hazardous operations. Identifies possible causes of faults and their consequences, and recommends remedies.

F.1.133 safety and hazardous operations analysis (preliminary)*: the initial results of the evaluation of the plant design with respect to safety and hazardous operations.

F.1.134 safety compliance reports*: documentation of analyses and evaluations of the plant performed with respect to safety considerations.

F.1.135 safety system specification: job specific document related to plant safety.

NOTE This specification may be developed from applying the design safety philosophy to plant design.

F.1.136 satisfy safety requirements* (AAM A235): perform a formal plant process design, operation, and control review to assess the whether all safety requirements are met.

NOTE Plant safety requirements involve issues such as source terms for spill scenarios, vapour dispersion for combustible and toxic releases, reliability of metallurgy and other materials, component failure rates, operator response and error, fail-safe instrumentation, equipment spacing, number and size of equipment trains, radiation from fires, relief system design philosophies, deflagration test results, thermal runaways and associated vent sizing, detonations and resulting shock waves.

© ISO 2001 — All rights reserved

F.1.137 schedules*: a time-based list of project tasks that describes:

— what is supposed to happen;

— when it is supposed to happen;

— task sequence and dependencies;

— restraints and constraints;

— float;

— critical path.

F.1.138 schematic diagrams*: a physically non-dimensional, 2D graphical representation of the functional design of a system that does not (necessarily) encompass physical information.

EXAMPLE Types of schematic diagrams include:

— PFD;

— P&ID;

— electrical single line;

— motor control;

— control loops;

— HVAC;

— plumbing;

— input output.

NOTE Schematic diagrams evolve through stages like P&IDs and other design documentation.

F.1.139 schematic diagrams (preliminary)*: an initial physically non-dimensional, 2D graphical representation of the functional design of a system that does not (necessarily) encompass physical information developed during conceptual plant design.

F.1.140 site information (existing): information about the physical location where the plant will be constructed and the conditions of any plant on the site (if one exists).

EXAMPLE Site information includes:

— geological data, such as before and after terrain contours, and subterranean structure, and seismic activity;

 © ISO 2001 — All rights reserved

— meteorological data such as seasonal wind profile, precipitation, snowfall, and ambient temperature;

— road data;

— cadastre (property lines) zones;

— utilities.

NOTE A kind of site information included in the scope of this part of ISO 10303 is verified field dimensions. They are parameters that specify the physical and spatial characteristics of an existing item or component in a plant that have been verified by measurements taken by a second, independent agency. For example, field dimensions provided by the Plant owner for piping tie-in locations (coordinate locations and sizes) are considered as "verified" when duplicated by the AEC representative. If discrepancies are discovered during verification of the field dimensions, the initial and verification measurement processes must be repeated to assure verified dimensions.

NOTE Existing plant conditions are the characteristics of the existing plant(s) relevant to the revamp, retrofit, or expansion Plant project.

F.1.141 societal requirements*: the expressed need or demand by society, on either a local, national, or global scale, for products, services, or processes.

NOTE In some instances, a market study may project the expected demand or price of a product or service required by some element of society.

F.1.142 specifications and standards: consensus or mandated technical descriptions of plant hardware or systems that control the design or construction of a plant.

F.1.143 specify building and plant services (AAM A243): establish utility and other service needs for the building(s) and plant(s) based on owner requirements, final system design, and final spatial design.

F.1.144 specify control requirements* (AAM A234): define instrumentation and control system characteristics required to fulfill requirements for plant operation using the operating procedures and safety requirements.

NOTE Control systems are used to help maintain plant safety, ensure product quality, and to safeguard equipment. These systems are used to control areas such as process reactions, flows, temperatures, pressures, and levels. They operate automatically, or provide indications to plant personnel. Control requirements are generally defined in the operating procedures and specified on the P&ID and in the instrument list.

F.1.145 specify equipment functional characteristics* (AAM A233): define the functional characteristics of each major item of equipment based on confirmed plant operating requirements, process technologies, and process optimization.

EXAMPLE Functional characteristics include equipment type, process stream inputs, outputs, capacities, and conditions, equipment metallurgy, piping and instrumentation, power requirements, and auxiliary systems.

F.1.146 specify piping and instrumentation* (AAM A232): define piping and instrumentation required by the process plant based on the functional requirements for the plant.

© ISO 2001 — All rights reserved

NOTE Piping and instrumentation functional requirements are developed based on plant production capacities, process type or technology, control methodology, chemical content of process streams, and equipment layout. Also considered are alternative operating conditions, maintenance requirements, and plant operating and personal safety are issues. The results of this activity are detailed on P&IDs, line lists, equipment lists, and instrument lists.

F.1.147 starting materials*: all necessary equipment components or consumable goods necessary to construct and operate the process plant for the production of useful products.

F.1.148 status: a report of the current state of a task, design, action, or schedule. It is a quality assurance feedback mechanism.

F.1.149 stream data: chemical composition, physical state, and mass quantities of process flows.

F.1.150 supplier documentation: drawings, manuals, calculations, etc. received from a company concerning items procured from the company, that provides information concerning design details or performance of the procured items.

NOTE - Statuses assigned to supplier documentation include:

— preliminary (in-process design information);

— certified (information from the supplier is warranted to correctly describe the as-delivered functional or physical data);

— released for fabrication or construction.

F.1.151 suppliers list*: a list of companies that provide commodities or services to an organization.

NOTE - Kinds or statuses of supplier lists include:

— approved;

— recommended;

— partnered.

F.1.152 system design (preliminary): at the conceptual level, this is an initial definition and representation of the physical components or items of the system.

F.1.153 system layout (preliminary): at the conceptual level, this is an initial definition and representation of the spatial configuration or arrangement of the system, showing all the major components of the system.

F.1.154 system layout and design: the definition and representation of the physical components or items and spatial configuration of the system in sufficient detail to support construction.

 © ISO 2001 — All rights reserved

NOTE 1 This definition results from the use of the system design basis, P&IDs, specifications, and other documentation or information.

NOTE 2 The definition of the term "system" is broader than common usage, e.g., it encompasses structural systems.

NOTE 3 System layout and designs can be viewed or categorized according to the following breakdowns:

— evolutionary phase

a) Initial;

b) Design;

c) Final.

— system type

a) Piping;

b) HVAC;

c) Electrical;

d) Instrumentation and Control;

e) Structural and Civil;

f) Architecture;

g) Safety.

— functional views

a) Conceptual arrangement;

b) Spatial information;

c) Schematic diagram;

d) Piping and instrumentation diagram (includes piping connectivity and sequencing).

EXAMPLE The final HVAC spatial information system design and layout will specify the definition, physical dimensions, location coordinates, and characteristics for all HVAC components that occupy space in the Plant. Only those physical dimensions, location coordinates, and characteristics required to specify the spatial instance of each component are included in this definition.

F.1.155 system layout and design (preliminary): the initial definition and representation of the physical components or items and spatial configuration of the system.

© ISO 2001 — All rights reserved

F.1.156 time and cost estimate*: projected or forecasted cost and length of time to design, produce, or procure a plant item, obtain a service, or achieve some goal.

F.1.157 unit operations*: design basis and owner requirements that define the basis for conceptual process design.

F.1.158 useful products*: the materials or energy generated through the operation of the process plant that are sold to customers for a profit.

F.2 Application activity model diagrams

The application activity model diagrams are given in figures F.2 through F.23. The graphical form of the application activity model is presented in the IDEF0 activity modelling format. Activities and data flows that are out of scope are marked with asterisks.

Figure F.1 describes the basic notation used in IDEF0 modelling. Each activity may be decomposed to provide more detail. If an activity has been decomposed, a separate diagram is included.

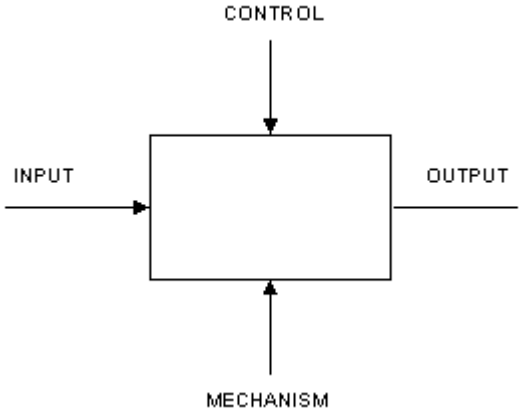

Figure F.1 - IDEF0 basic notation

As with any IDEF0 model, the AAM is dependent on a particular viewpoint and purpose. The purpose of the AAM is to describe the exchange of process plant spatial configuration information and design, fabrication, and maintenance information for process plant piping systems**.**

 © ISO 2001 — All rights reserved

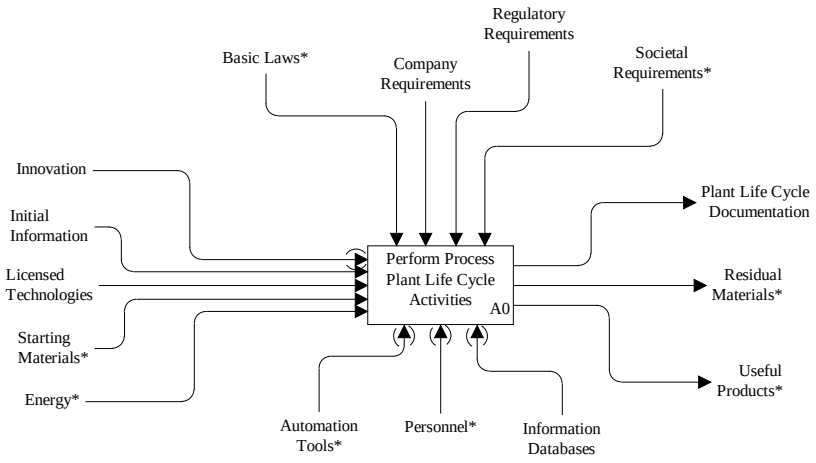

PURPOSE: To describe the exchange of process plant spatial configuration information and design, fabrication,and maintenance information for process plant systems.

VIEWPOINT: The user(s) of plant spatial configuration information, including architects, engineers, fabricators and constructors.

Figure F.2 - A-0: Process Plants

© ISO 2001 — All rights reserved

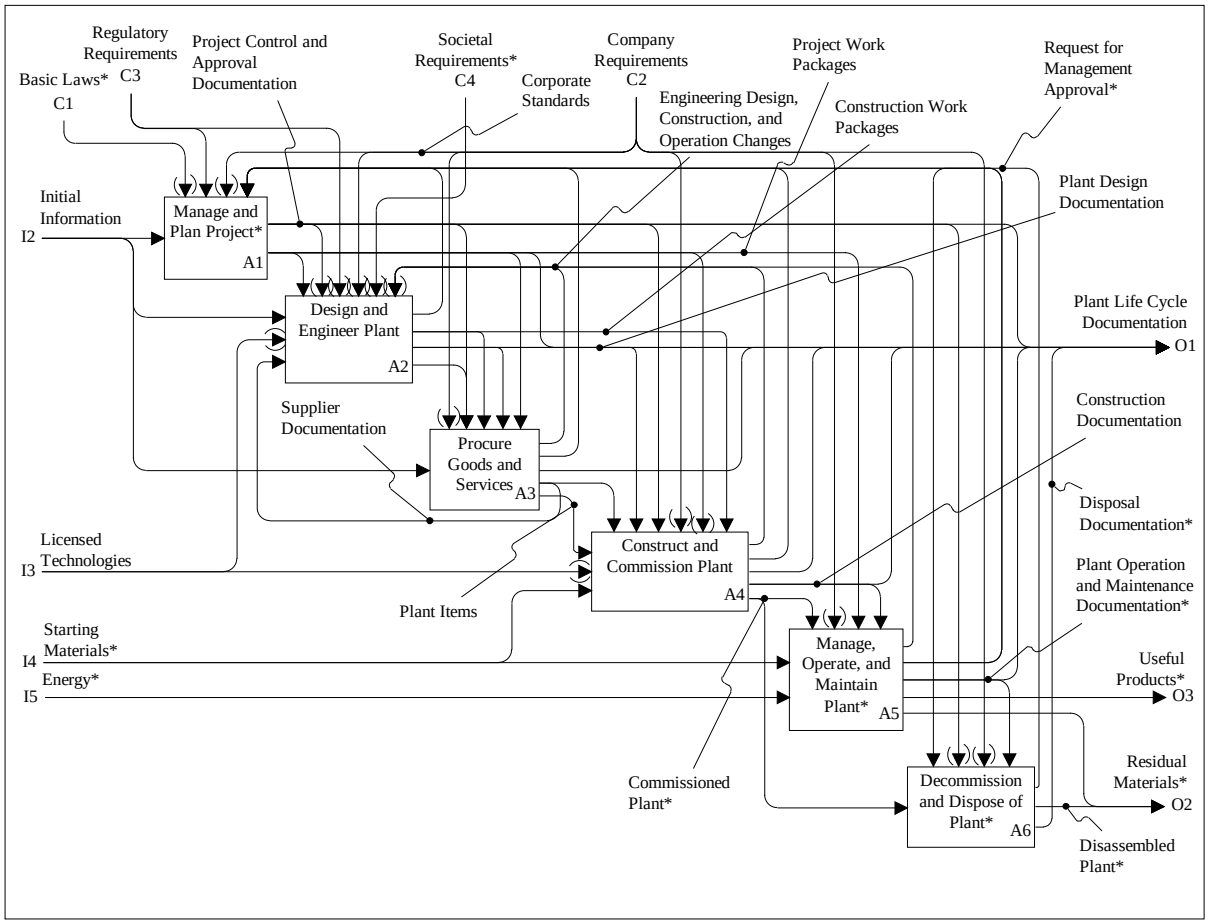

Figure F.3 - A0: Perform Process Plant Life-cycle Activities

© ISO 2001 — All rights reserved

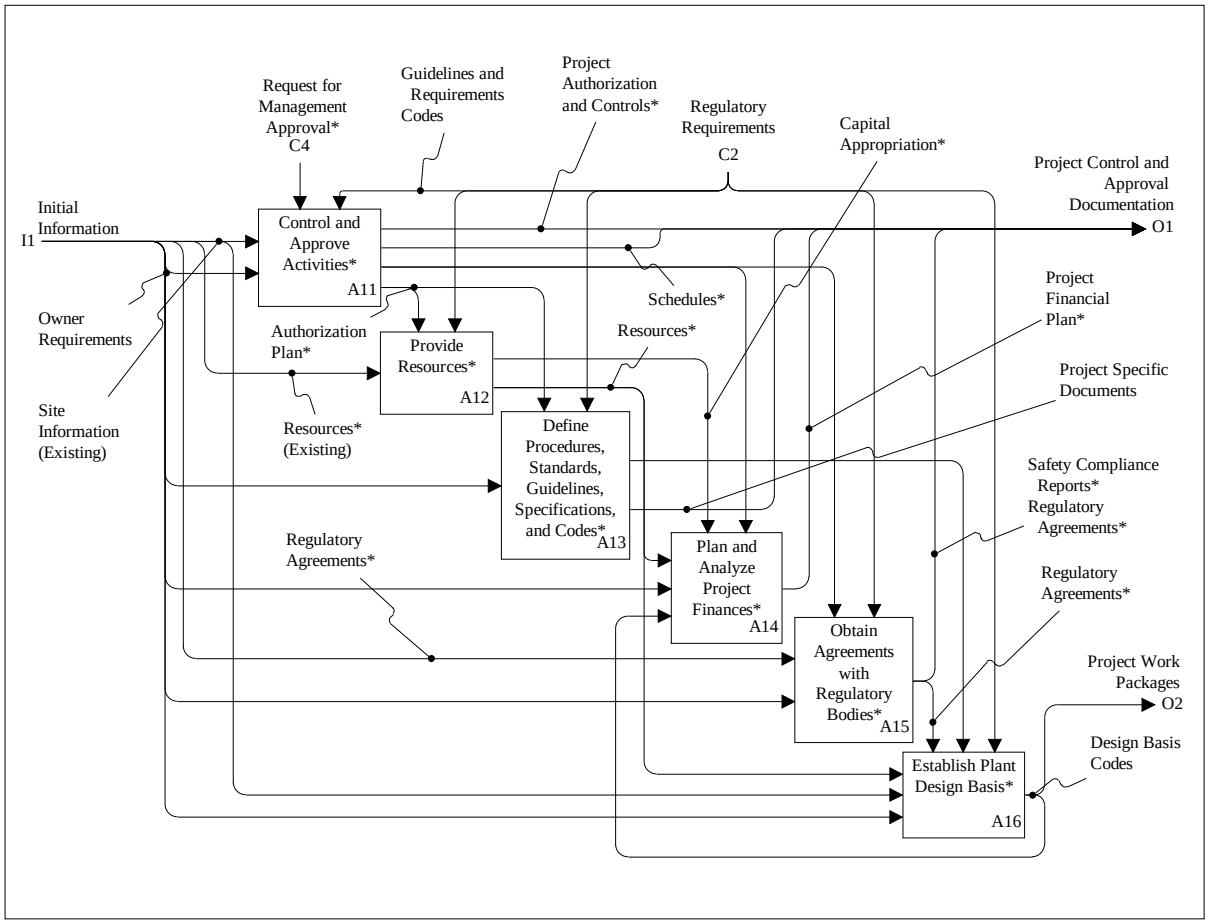

Figure F.4 - A1: Manage and Plan Project

© ISO 2001 — All rights reserved

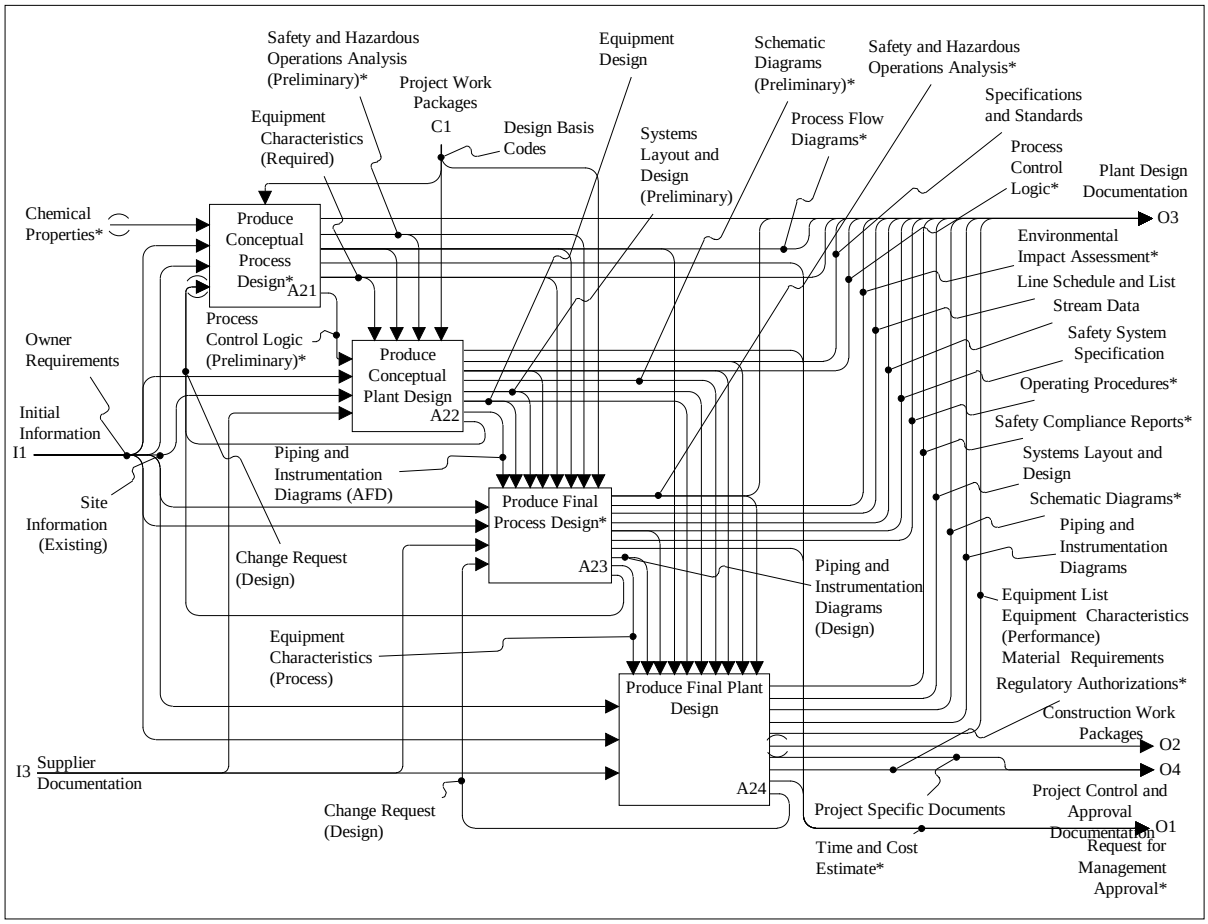

Figure F.5 - A2: Design and Engineer Plant

© ISO 2001 — All rights reserved

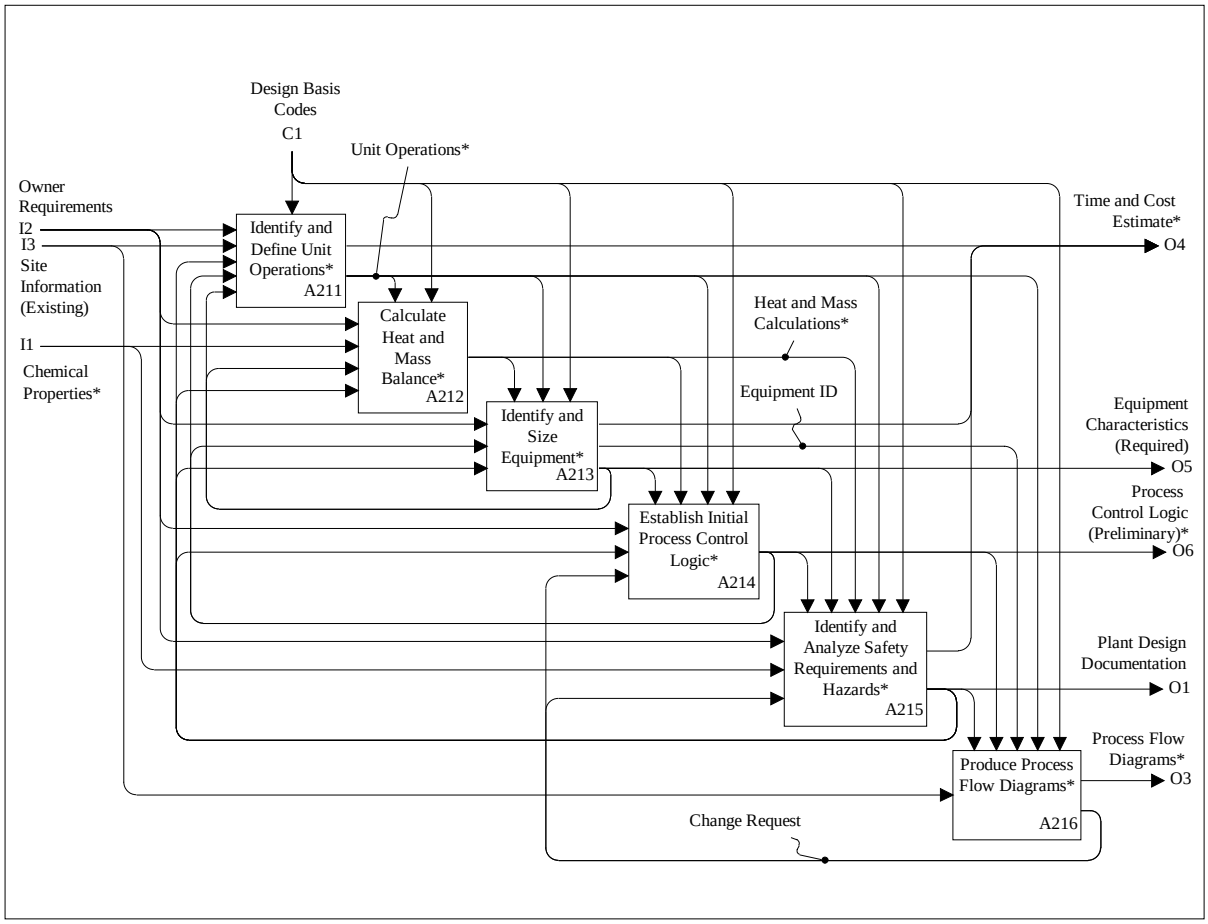

Figure F.6 - A21: Produce Conceptual Process Design

© ISO 2001 — All rights reserved

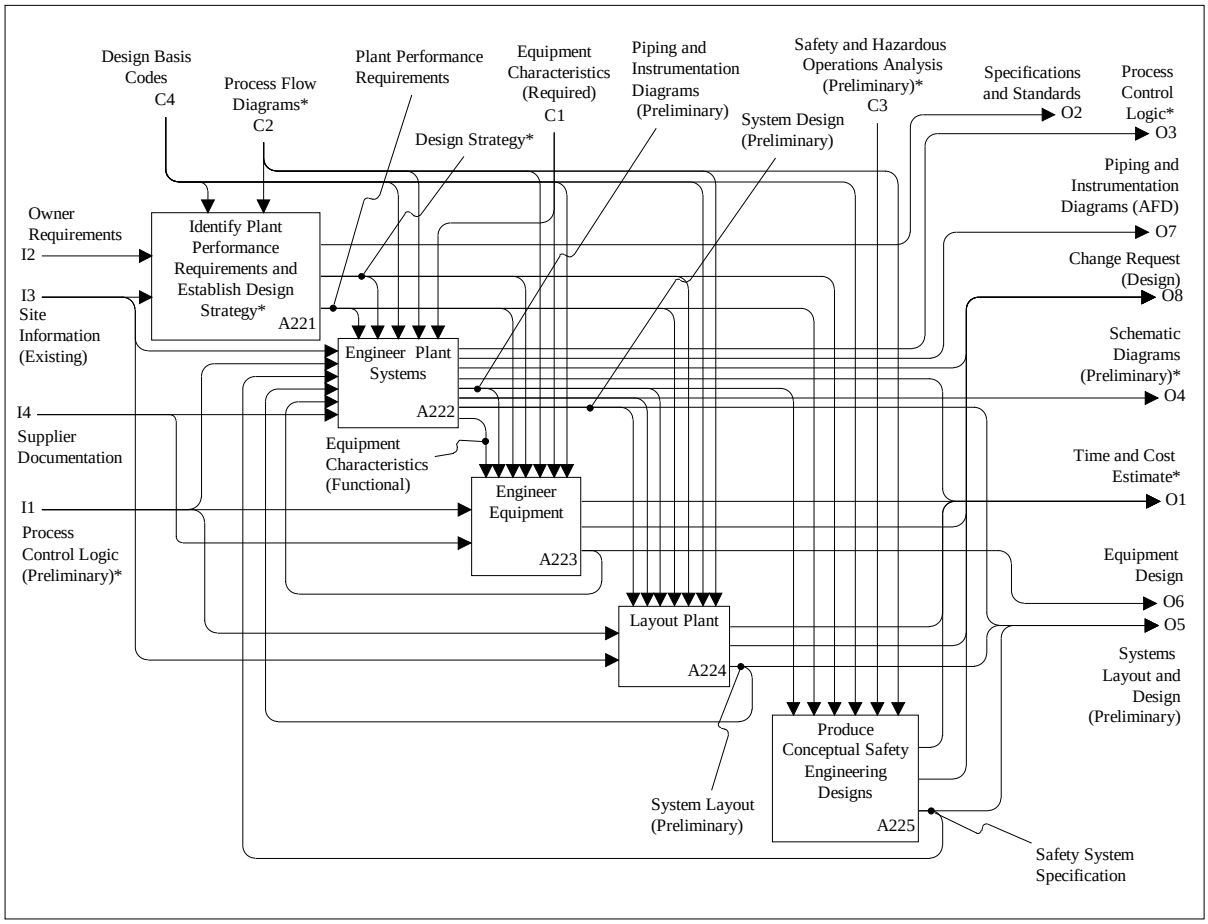

Figure F.7 - A22: Produce Conceptual Plant Design

© ISO 2001 — All rights reserved

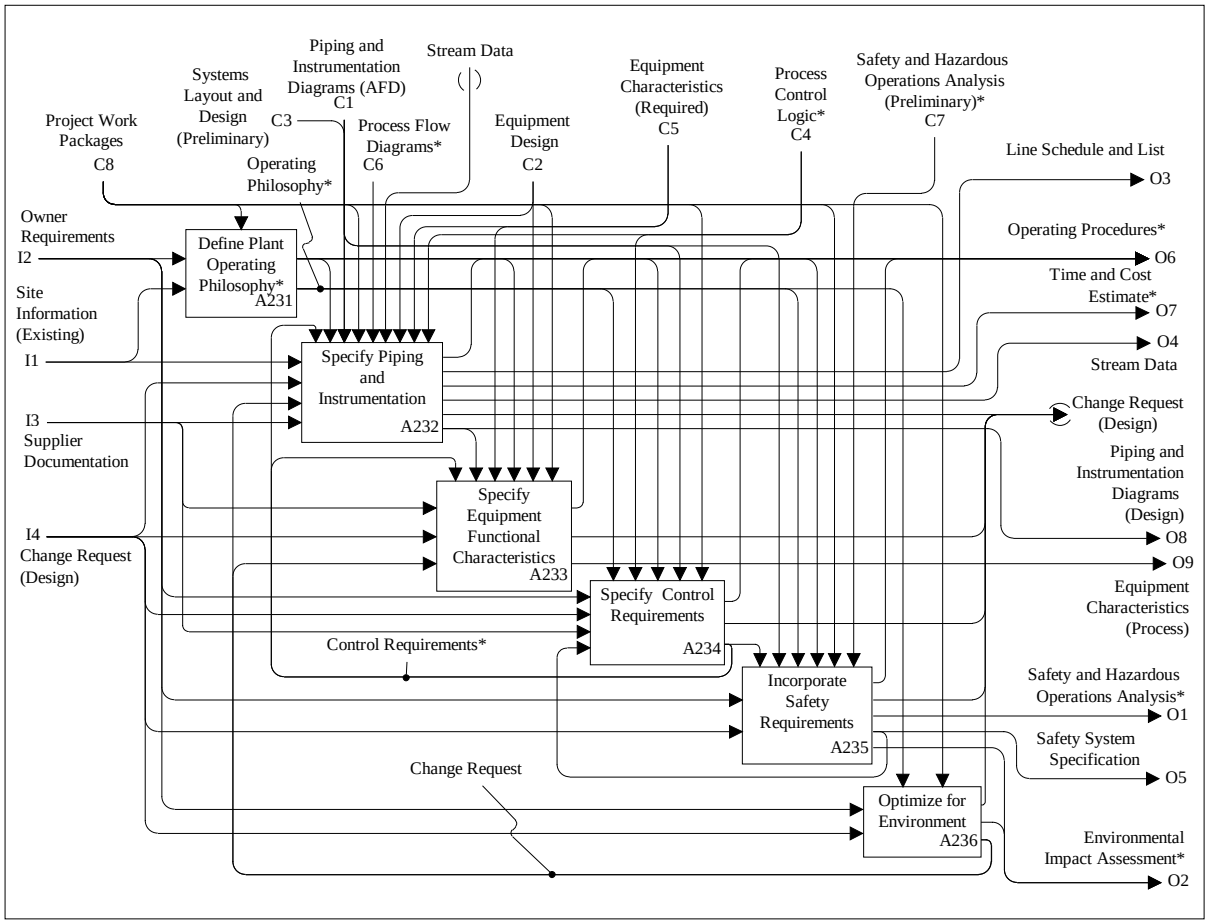

Figure F.8 - A23: Produce Final Process Design

© ISO 2001 — All rights reserved

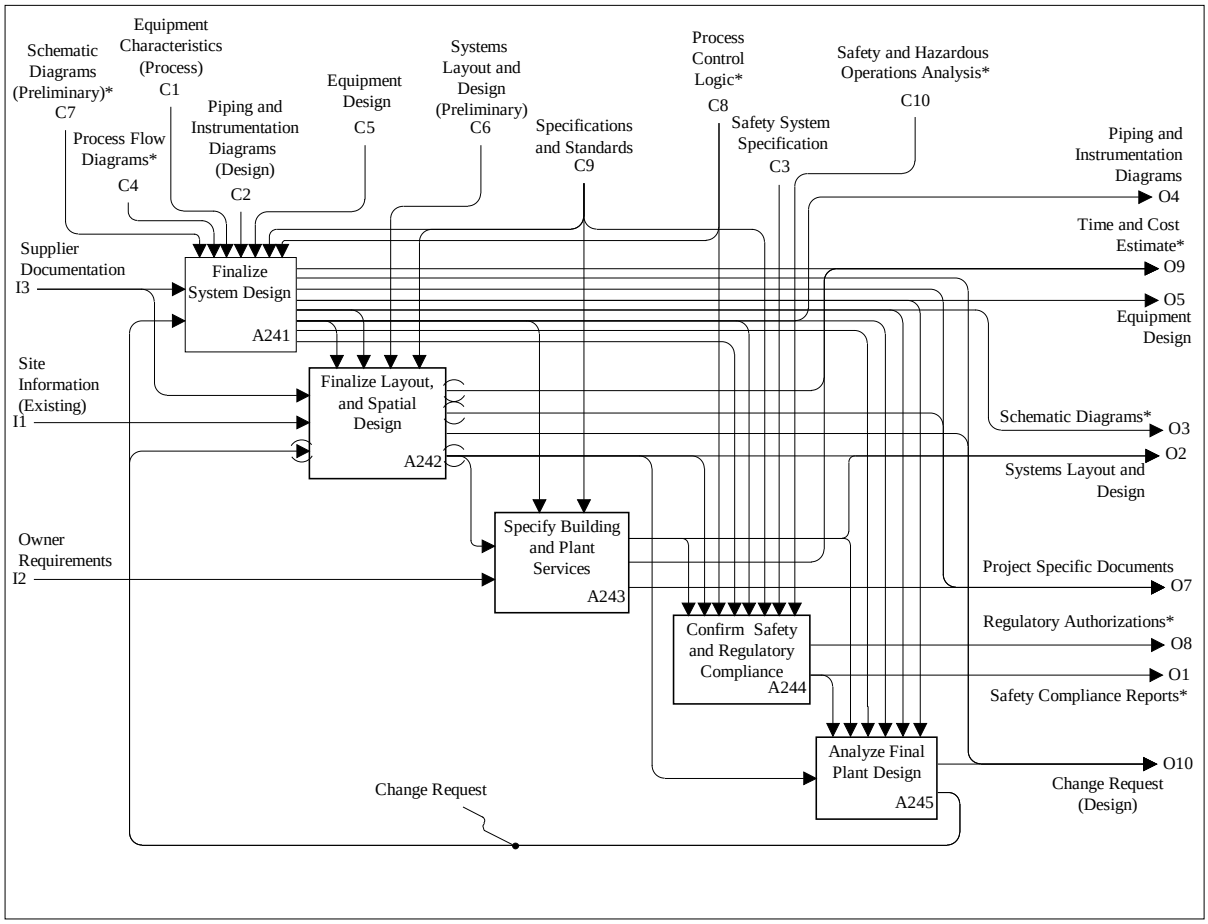

Figure F.9 - A24: Produce Final Plant Design

© ISO 2001 — All rights reserved

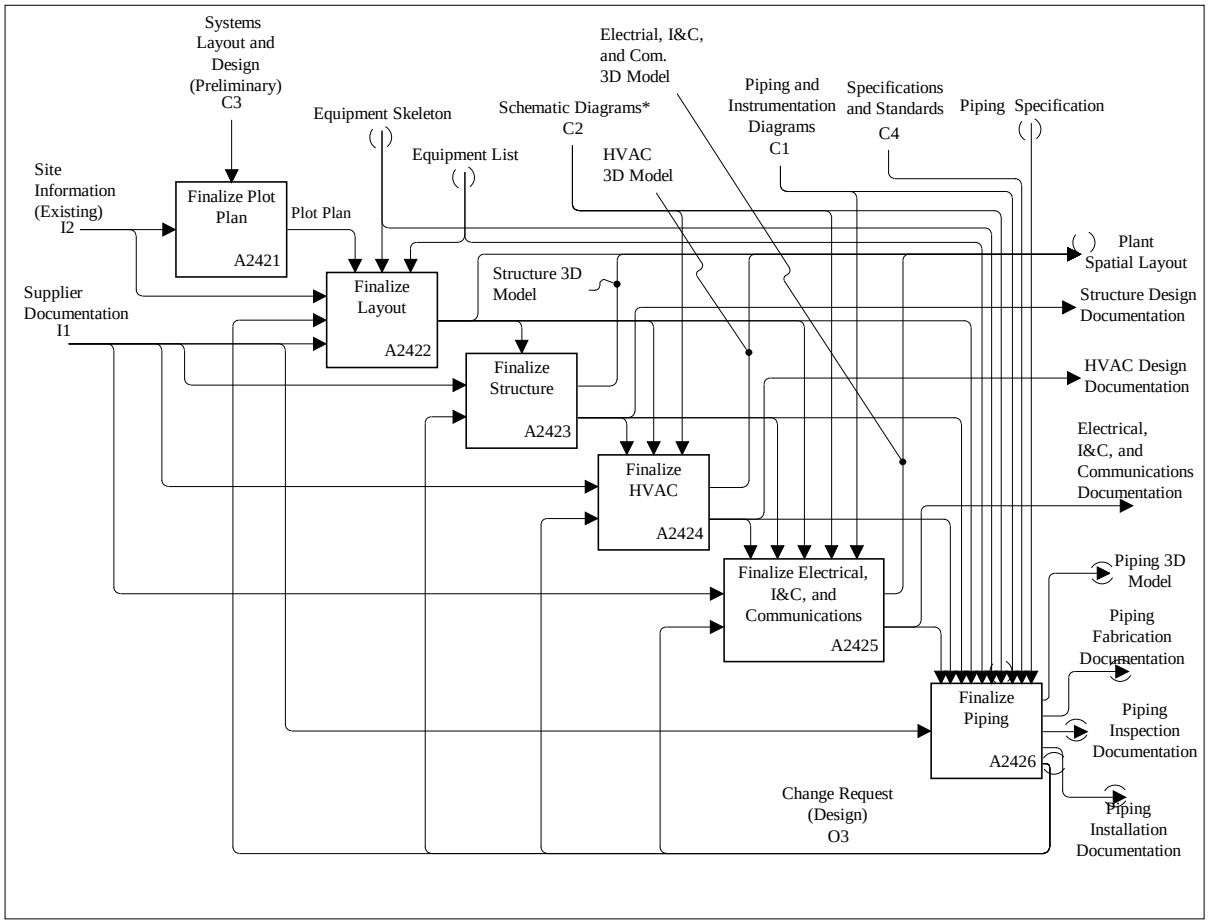

Figure F.10 - A242: Finalize Layout and Spatial Design

© ISO 2001 — All rights reserved

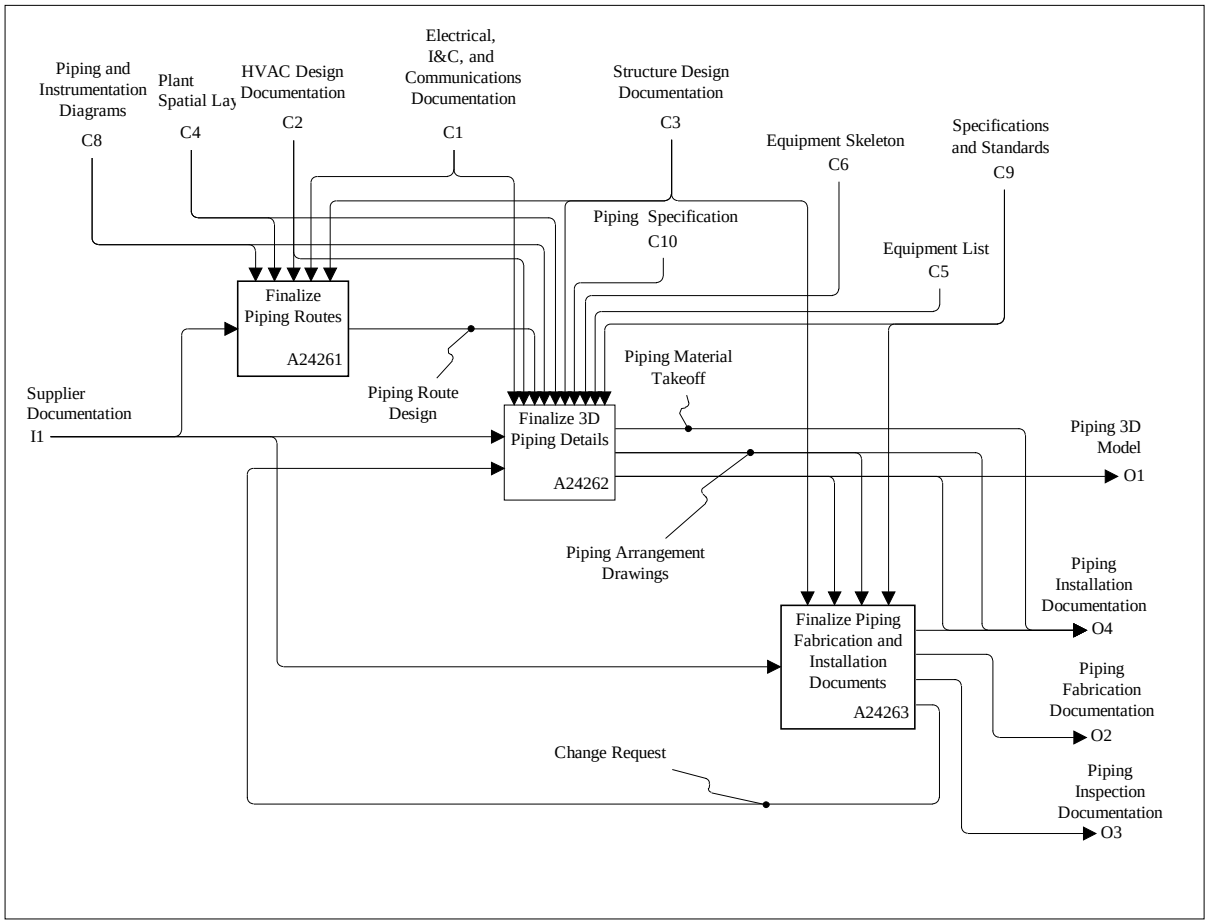

Figure F.11 - A2426: Finalize Piping

© ISO 2001 — All rights reserved

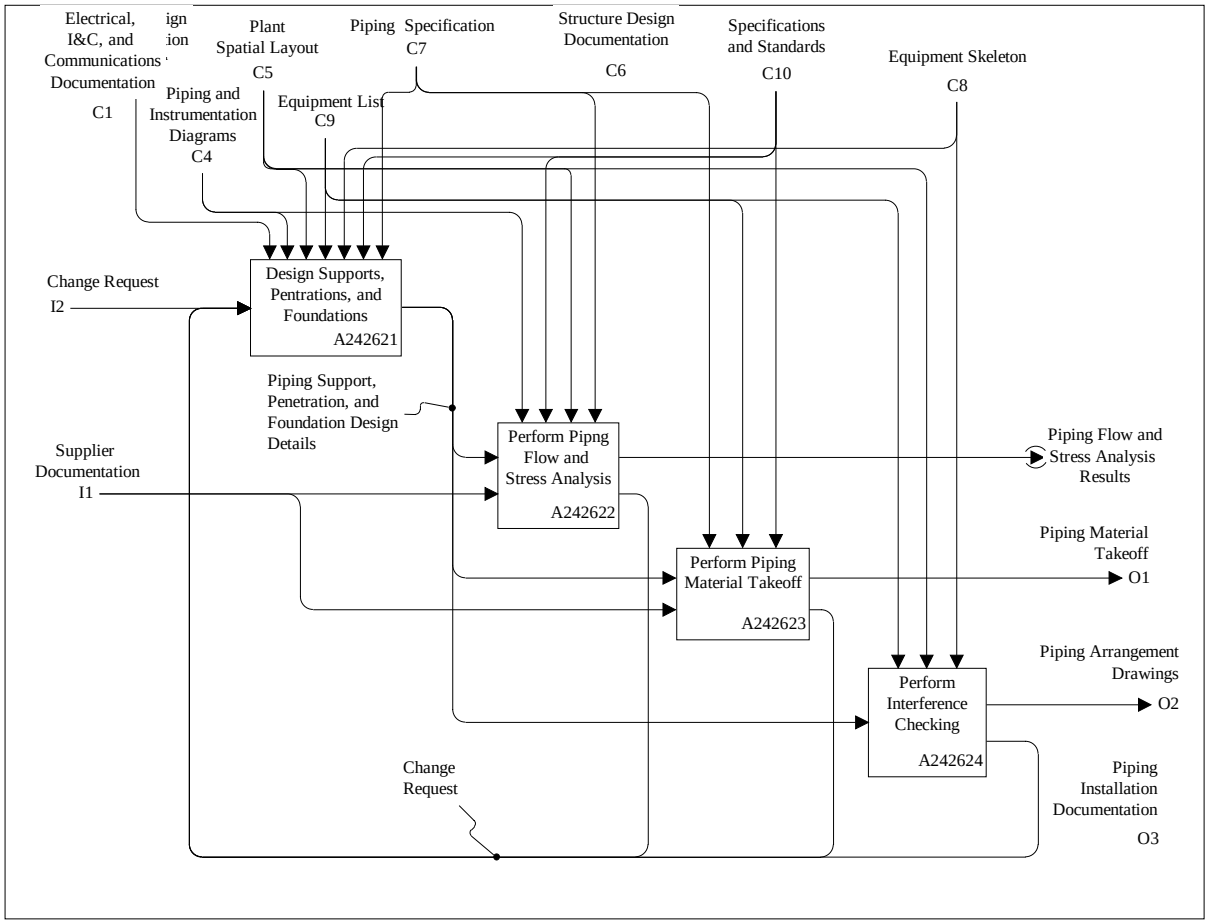

Figure F.12 - A24262: Finalize 3D Piping Details

© ISO 2001 — All rights reserved

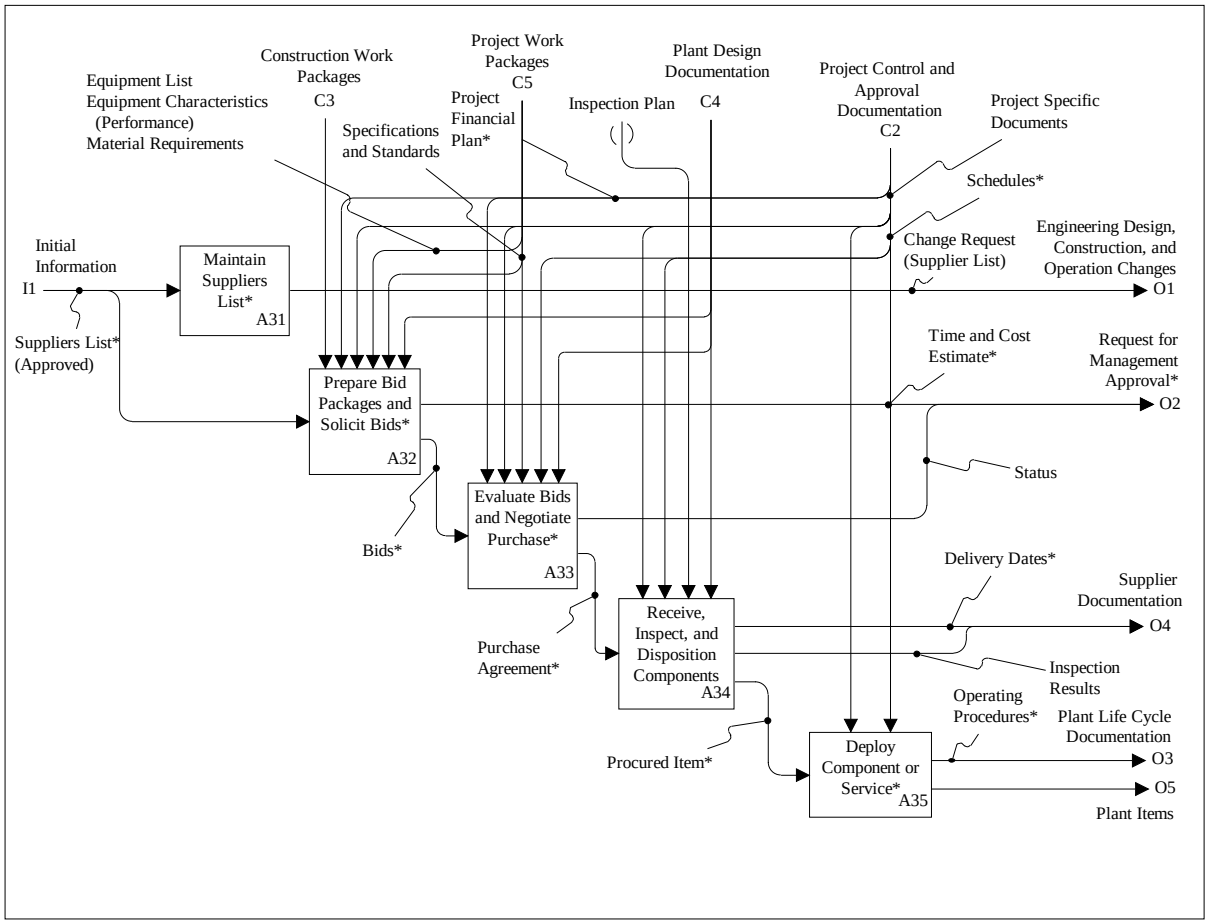

Figure F.13 - A3: Procure Goods and Services

© ISO 2001 — All rights reserved

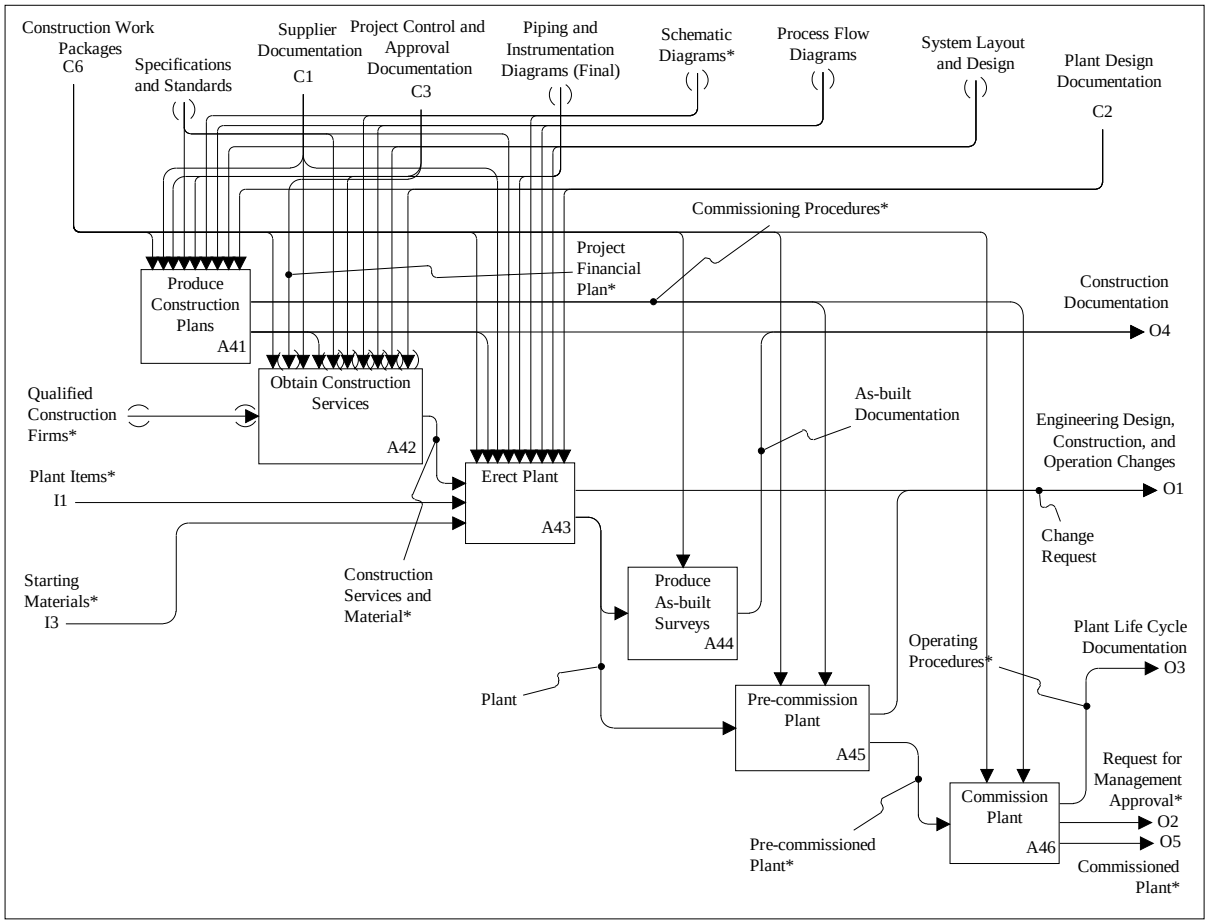

Figure F.14 - A4: Construct and Commission Plant

© ISO 2001 — All rights reserved

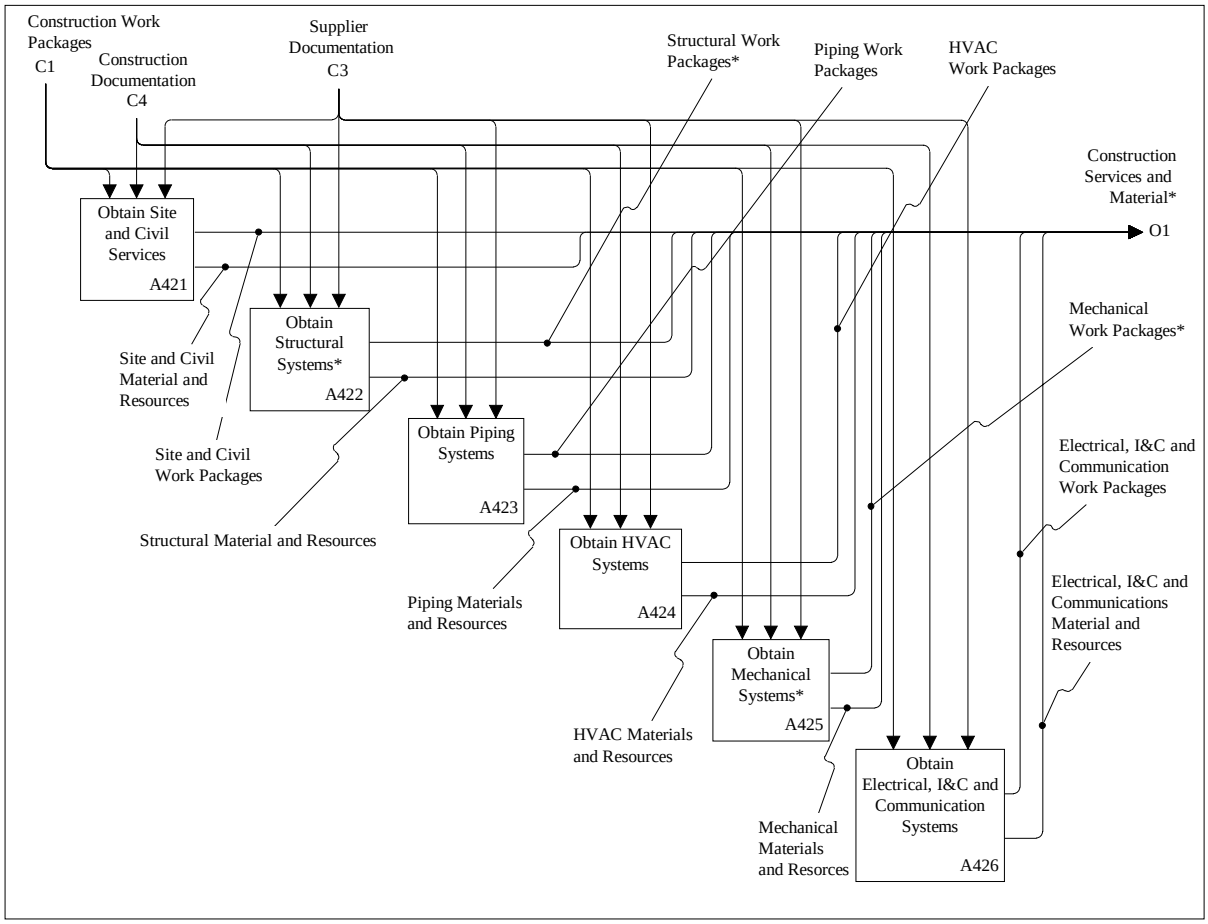

Figure F.15 - A42: Obtain Construction Services

© ISO 2001 — All rights reserved

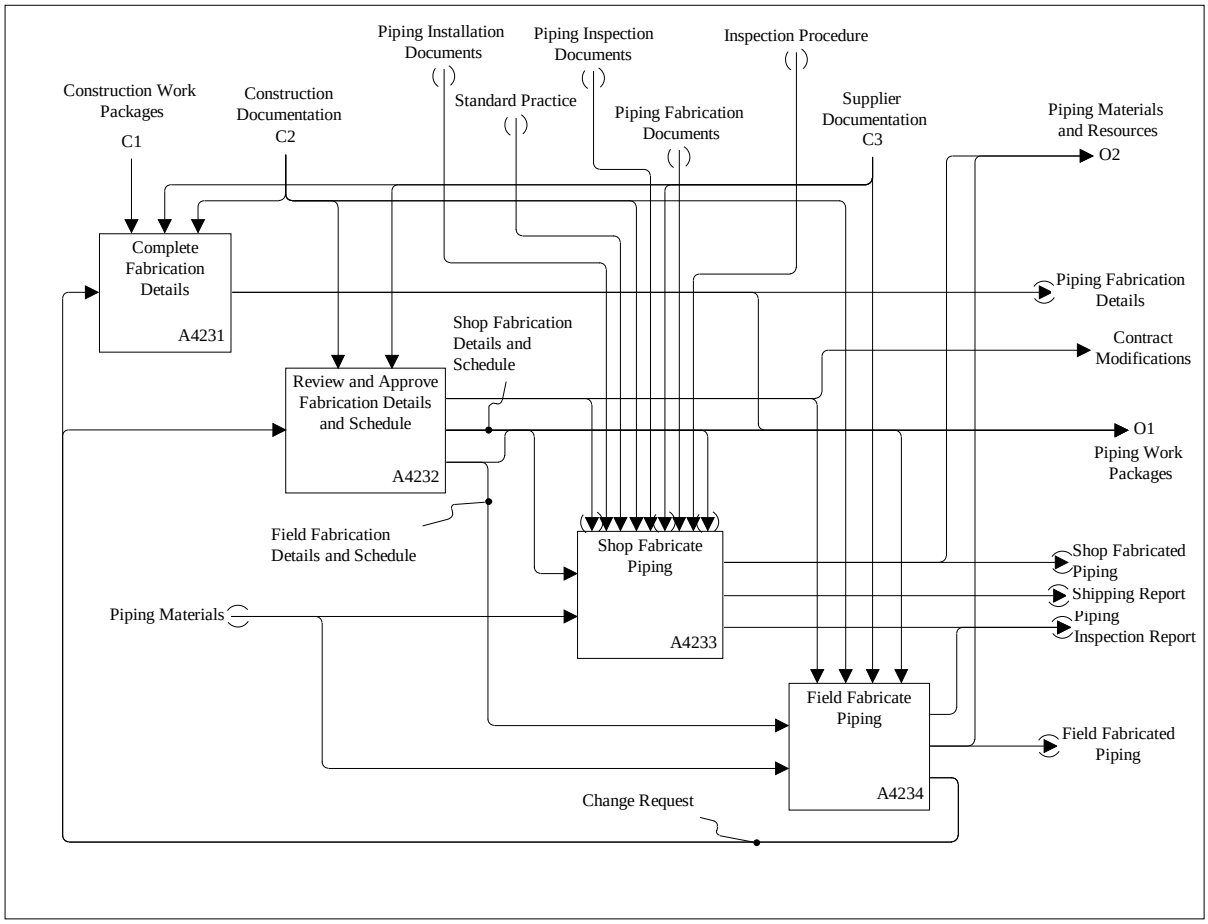

Figure F.16 - A423: Obtain Piping Systems

© ISO 2001 — All rights reserved

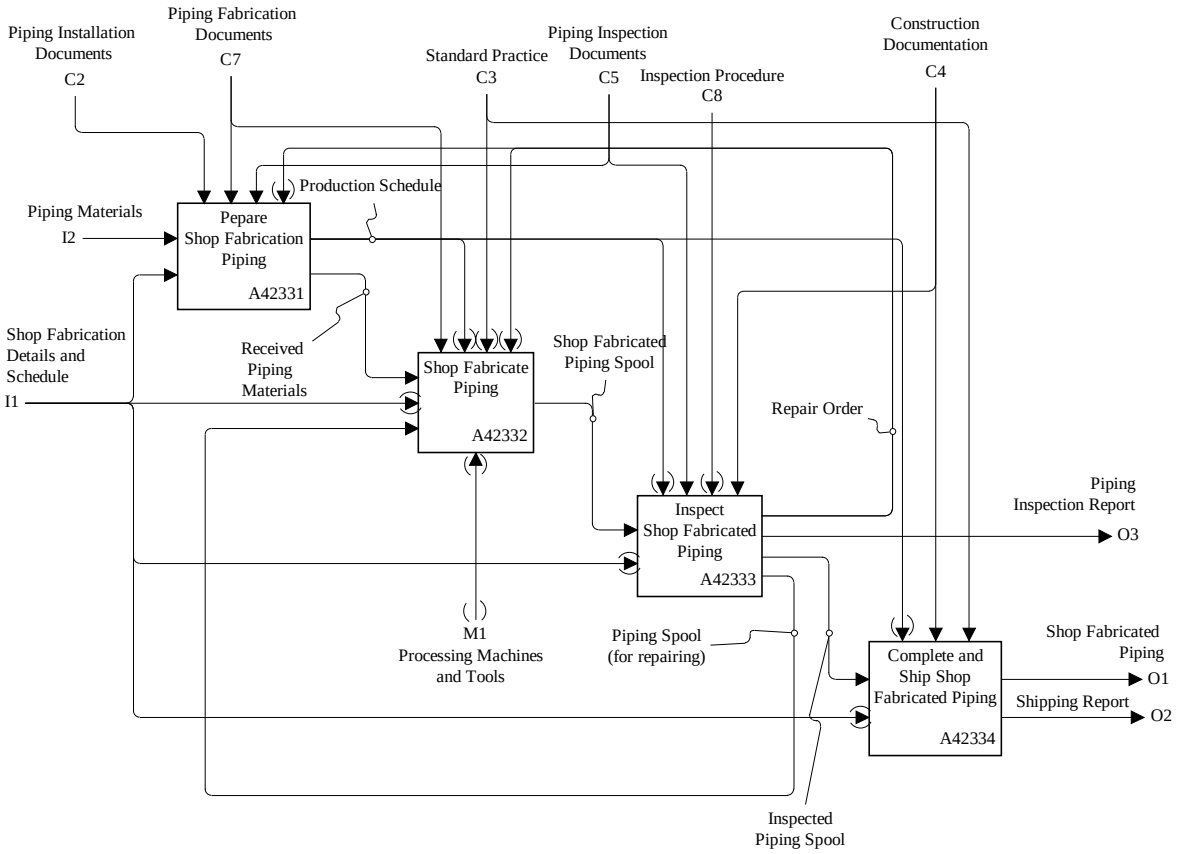

Figure F.17 - A4233: Shop Fabricate Piping

© ISO 2001 — All rights reserved

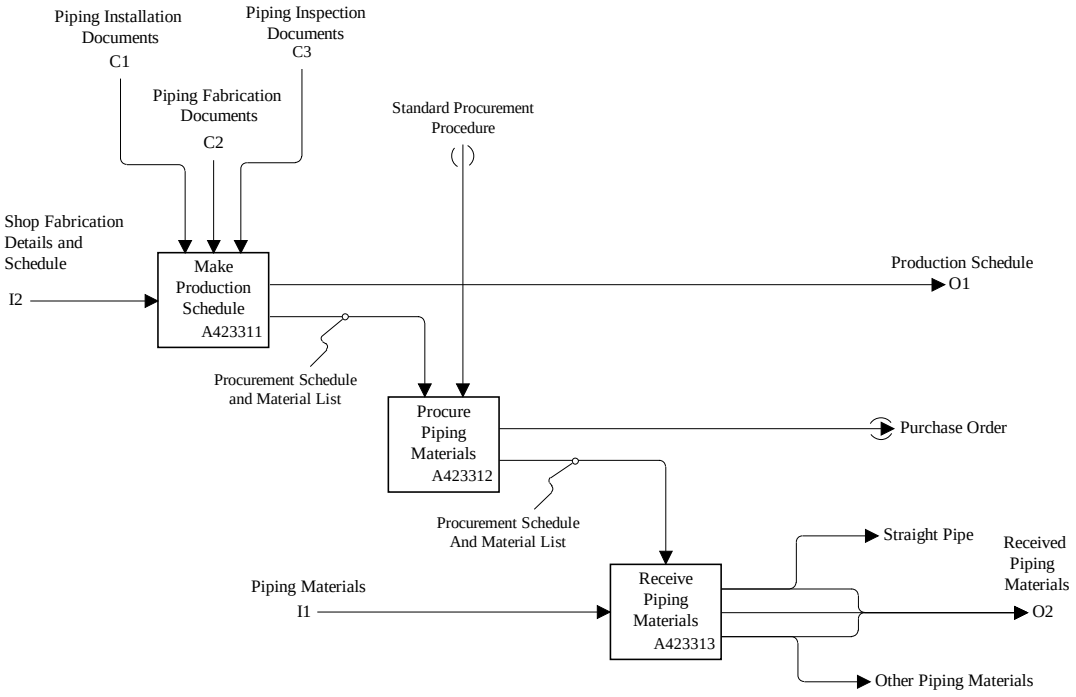

Figure F.18 - A42331: Prepare Shop Fabrication Piping

© ISO 2001 — All rights reserved

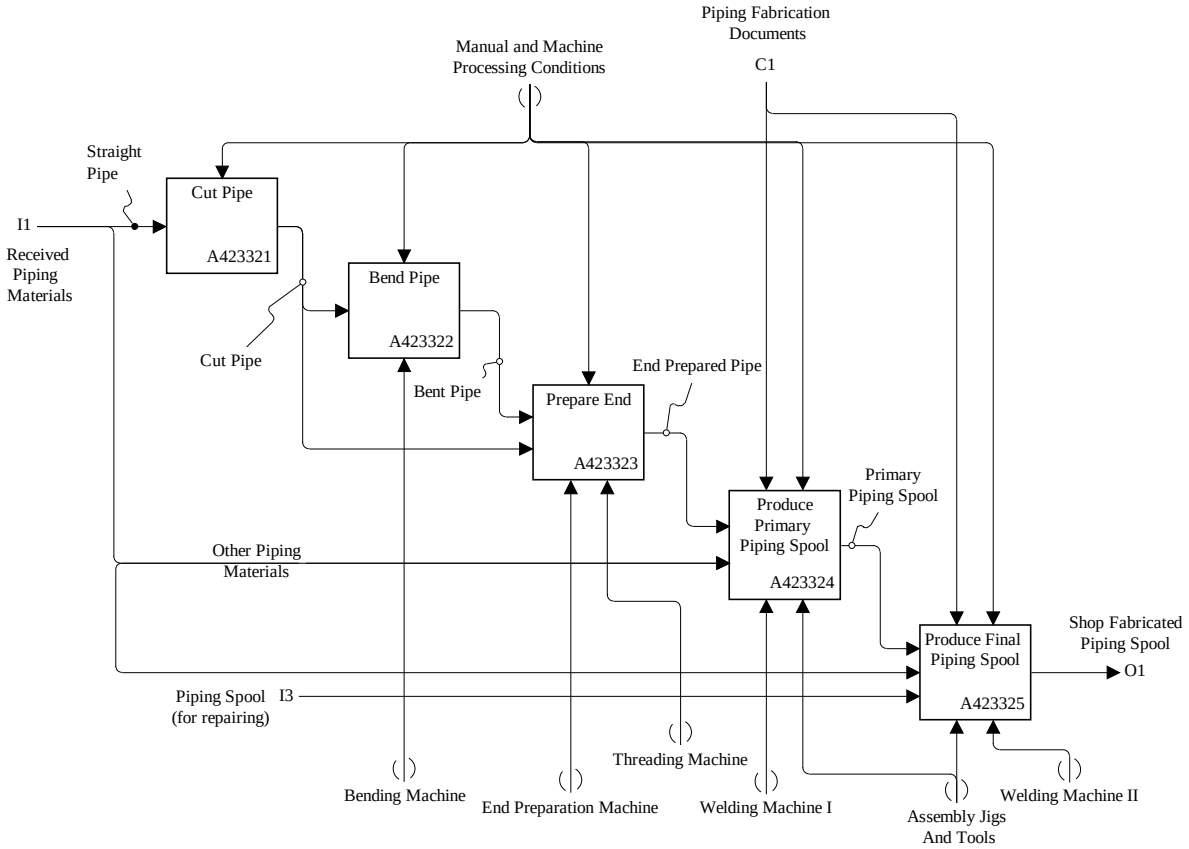

Figure F.19 - A42332: Shop Fabricate Piping

© ISO 2001 — All rights reserved

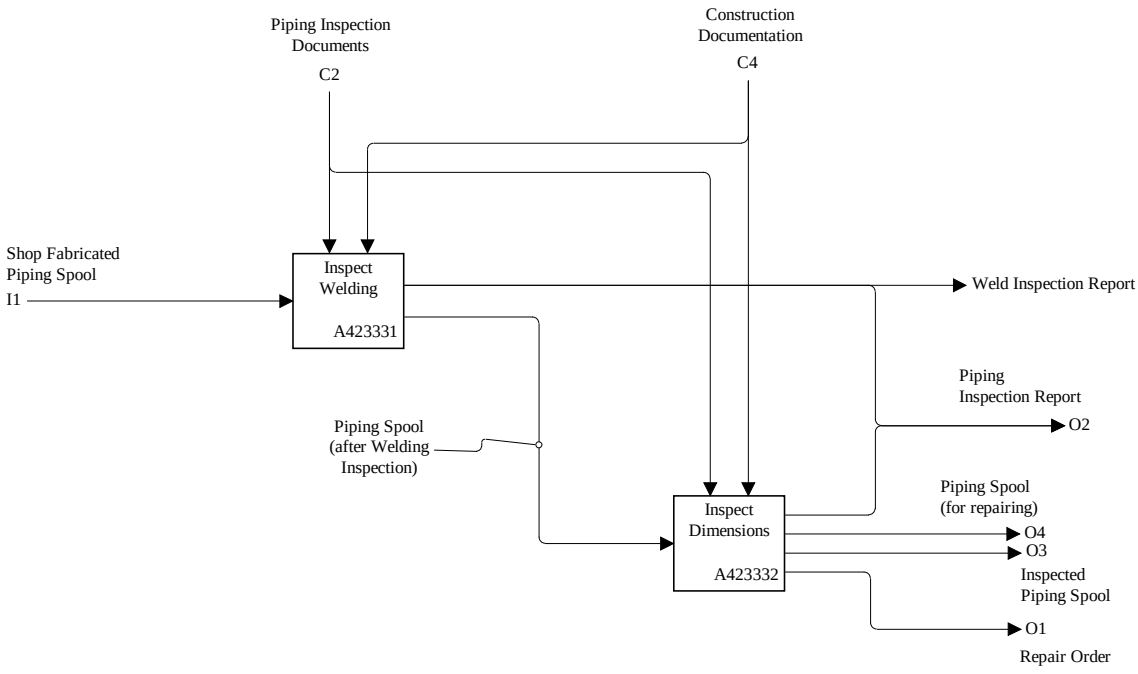

Figure F.20 - A42333: Inspect Shop Fabricated Piping

© ISO 2001 — All rights reserved

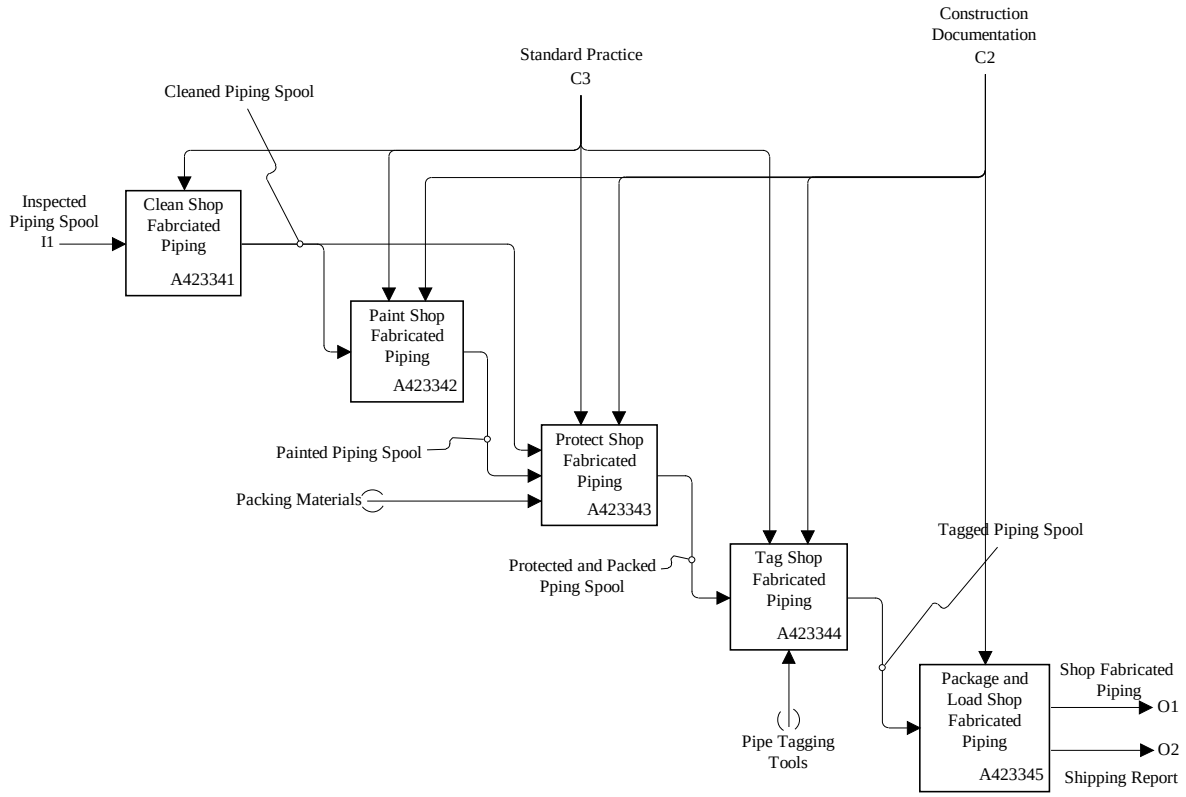

Figure F.21 - A42334: Complete and Ship Shop Fabricated Piping

© ISO 2001 — All rights reserved

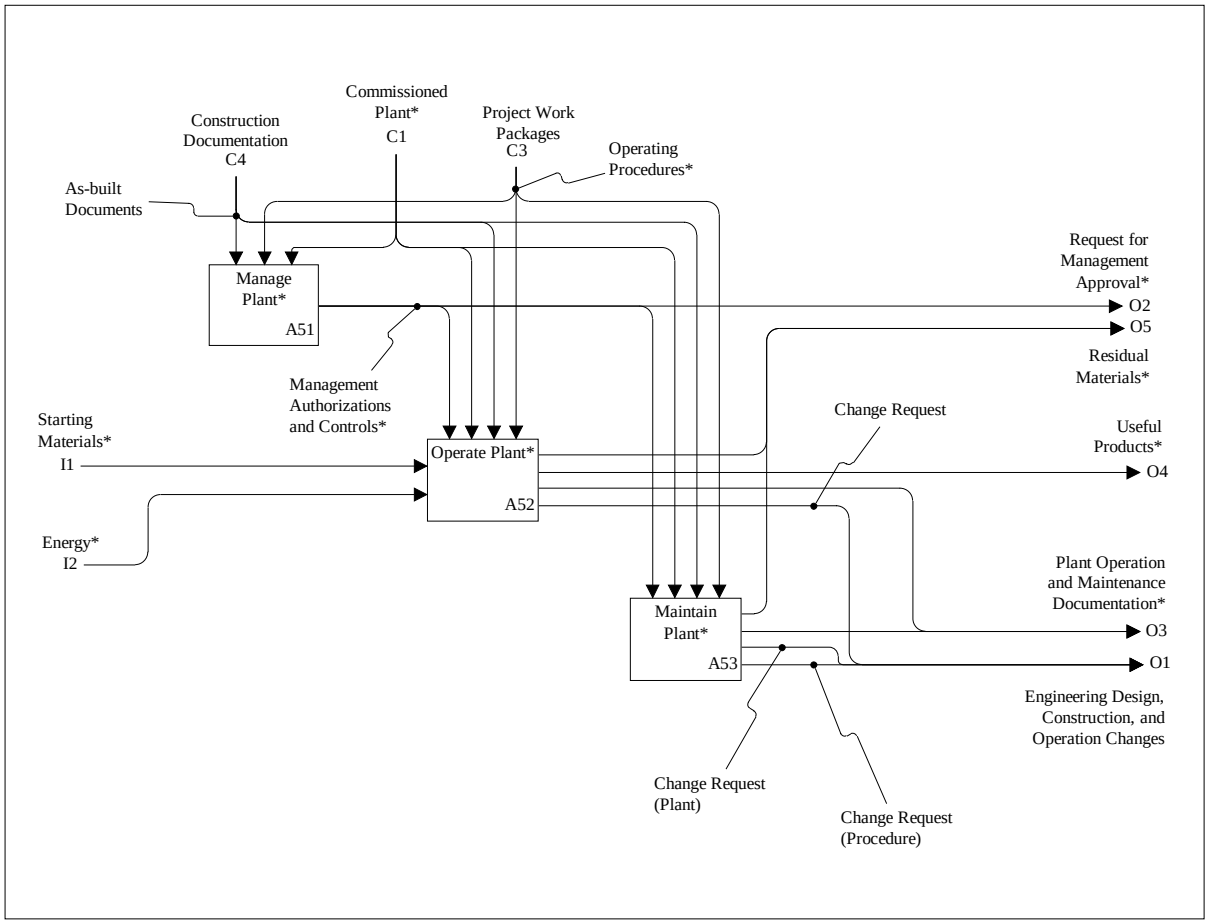

Figure F.22 - A5: Manage, Operate, and Maintain Plant

© ISO 2001 — All rights reserved

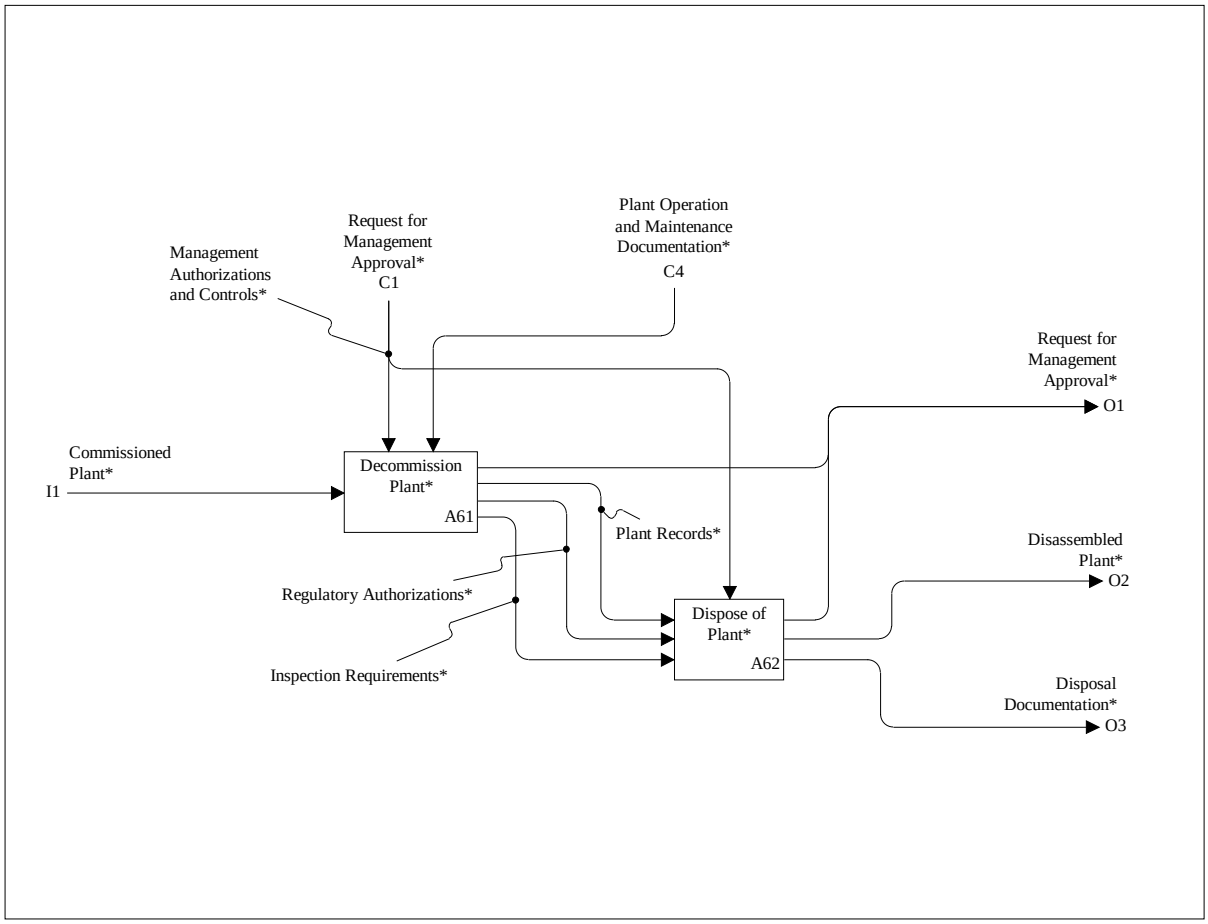

Figure F.23 - A6: Decommission and Dispose of Plant

© ISO 2001 — All rights reserved

F.3 AAM/ARM Correspondence

An analysis of the correspondence between the in-scope data flows of the AAM and the ARM has been completed. This analysis mapped the in-scope inputs, controls, outputs, or mechanisms (ICOMs) identified in this annex to the ARM UoFs and entities identified in 4.1 and 4.2, respectively. The AAM ICOMs and their corresponding ARM UoFs and entities are shown in Table F.1. The results of this analysis indicated that all of the in-scope ICOMs were covered by one or more ARM entities.

© ISO 2001 — All rights reserved

Table F.1 - AAM ICOM to ARM UoF/entity mapping

AAM ICOM	ARM UoF	ARM Entity
Change Request Change Request (Design) Change Request (Plant) Change Request (Procedure) Change Request (Supplier List)	Change_information	All entities in the UoF
Equipment Characteristics (Functional) Equipment Characteristics (Performance) Equipment Characteristics (Process) Equipment Characteristics (Required) Equipment List Equipment ID	Equipment_characterization	All entities in the UoF
	Piping_component_-characterization	All entities in the UoF
Codes Corporate Standards Design Basis Guidelines and Requirements Owner Requirements Project-specific Documents Regulatory Requirements Safety System Specification Specifications and Standards	Connector	Piping_connector Piping_connector_-service_characteristic
	Equipment_characterization	Equipment
	Piping_component_-characterization	Piping_size_description Pressure_class Schedule
	Piping_system_functional_-characterization	Piping_specification Piping_system Piping_system_line Stream_design_case

© ISO 2001 — All rights reserved

Table F.1 - AAM ICOM to ARM UoF/entity mapping - (continued)

AAM ICOM	ARM UoF	ARM Entity
	Plant_characterization	Piping_system
	Plant_item_characterization	Construction_material Design_project Functional_design_view Material_specification_-selection Physical_design_view Piping_system_-component Required_material_-description Specification_item_-family Structural_component
Line Schedule and List	Piping_system_functional_-characterization	Line_piping_system_-component_assignment Piping_system_line
Material Requirements	Plant_item_characterization	Material_specification_-selection Material_specification_-subset_reference
Plant	Plant_characterization	Plant
Plant Items	Plant_item_characterization	Plant_item
Plant Performance Requirements	Plant_characterization	Functional_plant Plant Plant_process_capability
Site Information (Existing)	Site_characterization	Site
Status	Change_information Shape	Change Plant_item_-interference_status
Stream Data	Piping_system_functional_-characterization	Stream_design_case Stream_phase
System Design (Preliminary) System Layout System Layout and Design System Layout and Design (Preliminary)	Piping_system_functional_-characterization	All entities in the UoF
	Plant_characterization	All entities in the UoF
	Plant_item_characterization	All entities in the UoF

Table F.1 - AAM ICOM to ARM UoF/entity mapping - (continued)

© ISO 2001 — All rights reserved

AAM ICOM	ARM UoF	ARM Entity
	Site_characterization	All entities in the UoF
Supplier Data	Equipment_characterization Plant_item_characterization	Equipment Catalogue_definition Catalogue_item

The analysis also indicated that the scope of the AP described by the ARM is more refined than that of the AAM in that not all of the entities defined in the ARM map back to an AAM ICOM. A listing of the ARM entities is provided in table 4 of the *Application Protocol 227 Validation Report Version 1.1* [11]. This listing shows whether an ARM entity is related to an AAM ICOM, and if not, what UoF it is part of. The results of this review show that the all the ARM entities that are not mapped from an AAM ICOM are related to connections between items (connection and connector UoFs), item representation (shape_representation and wireframe_geometry UoFs), or item shape (shape UoF).

 © ISO 2001 — All rights reserved

Annex G
(informative)

Application reference model

This annex provides the application reference model for this part of ISO 10303 and is given in figures G.2 through G.43. The application reference model is a graphical representation of the structure and constraints of the application objects specified in clause 4. The graphical form of the application reference model is presented in IDEF1X. The application reference model is independent from any implementation method. The diagrams use the IDEF1X graphical notation [2].

Extensions to the IDEF1X notation are used within the ARM diagrams through the use of symbols to denote off-page connectors. The symbols for the off-page connectors and their usage are drawn from the EXPRESS-G graphical modeling language and have the same meaning. Figure G.1 illustrates how off-page connectors are used to link relationships on different pages.

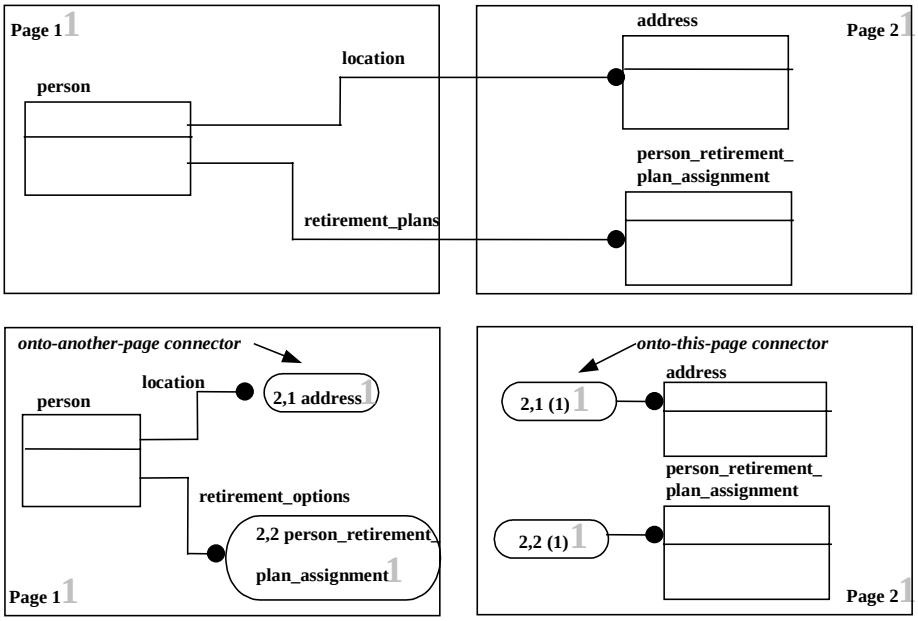

Figure G.1 - Off-page connectors

© ISO 2001 — All rights reserved

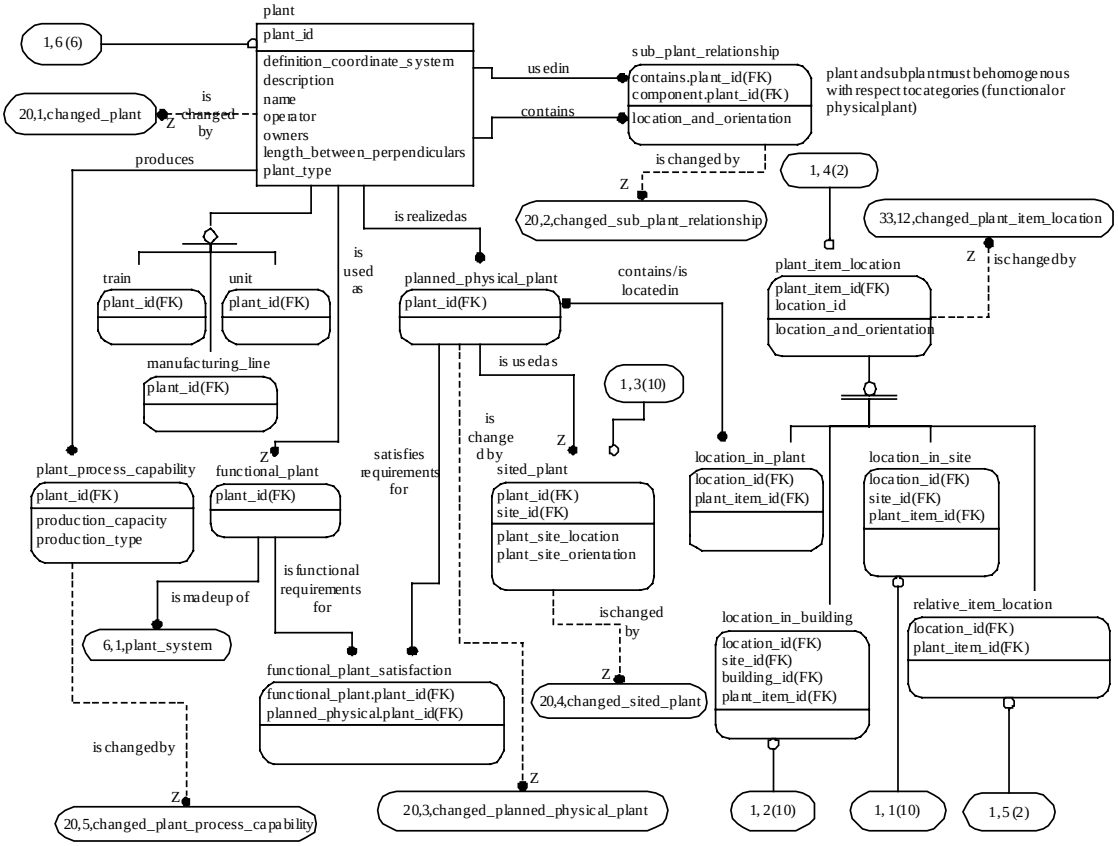

Figure G.2 - ARM diagram 1 of 42

 © ISO 2001 — All rights reserved

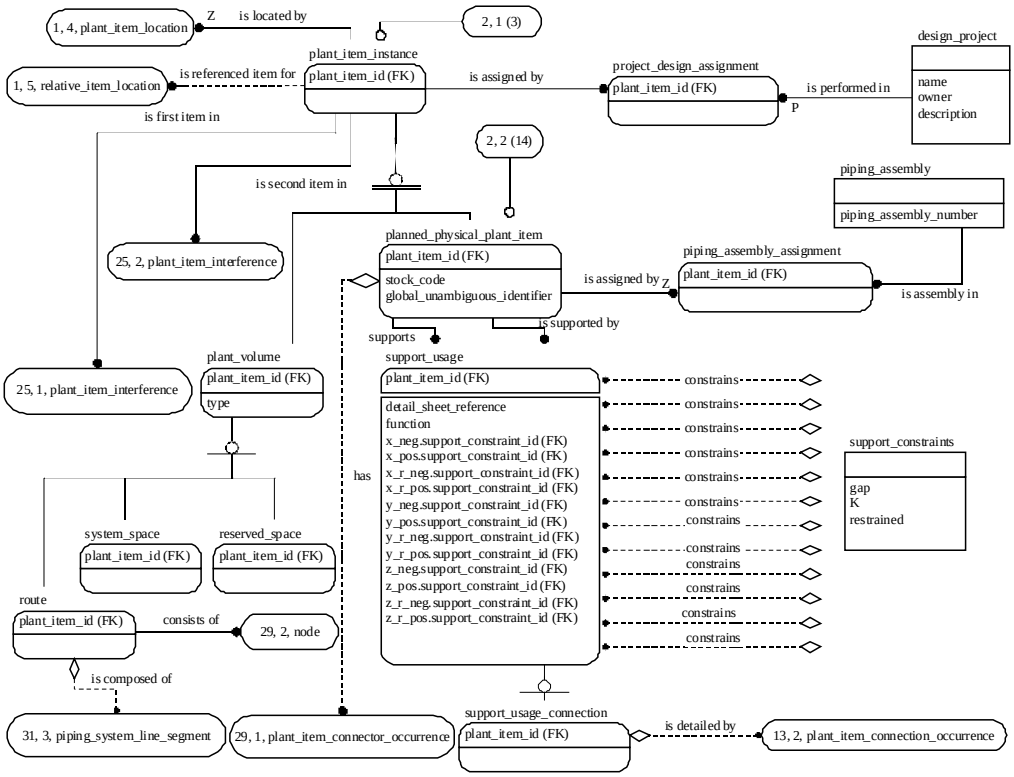

Figure G.3 - ARM diagram 2 of 42

© ISO 2001 — All rights reserved

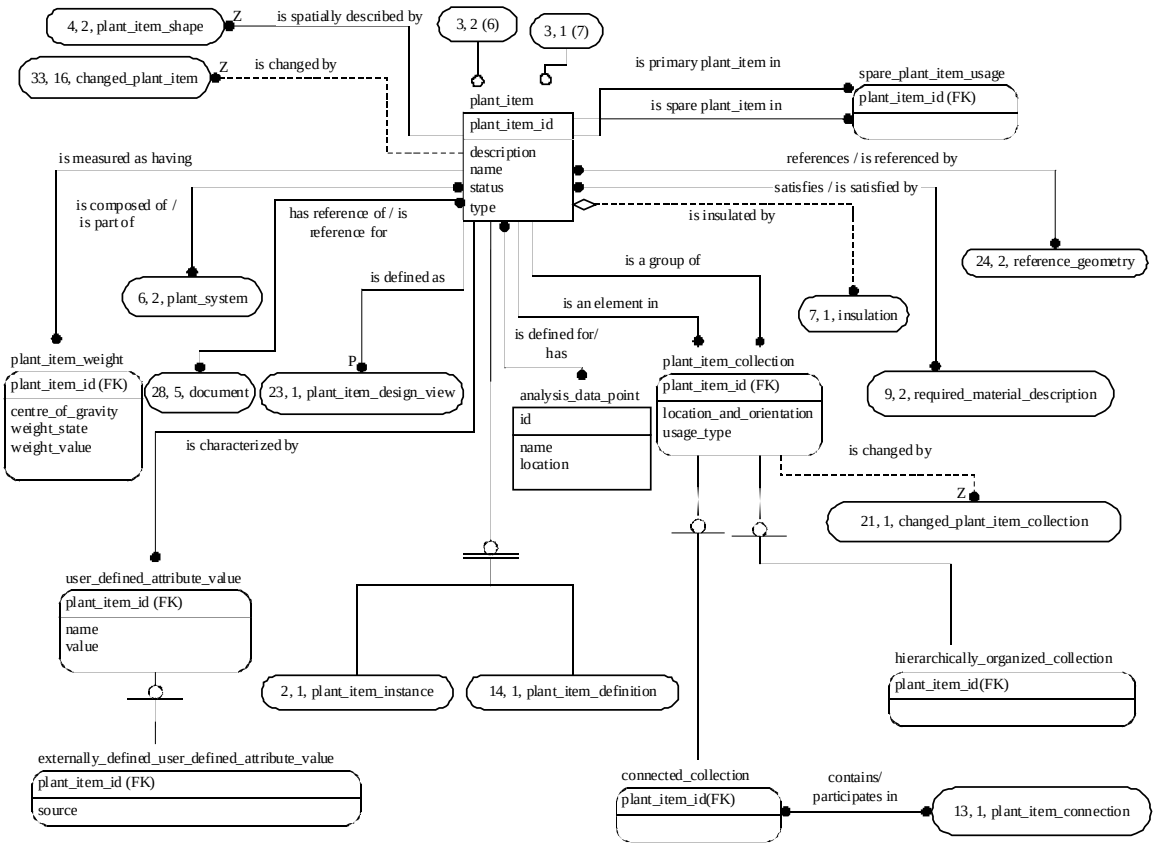

Figure G.4 - ARM diagram 3 of 42

 © ISO 2001 — All rights reserved

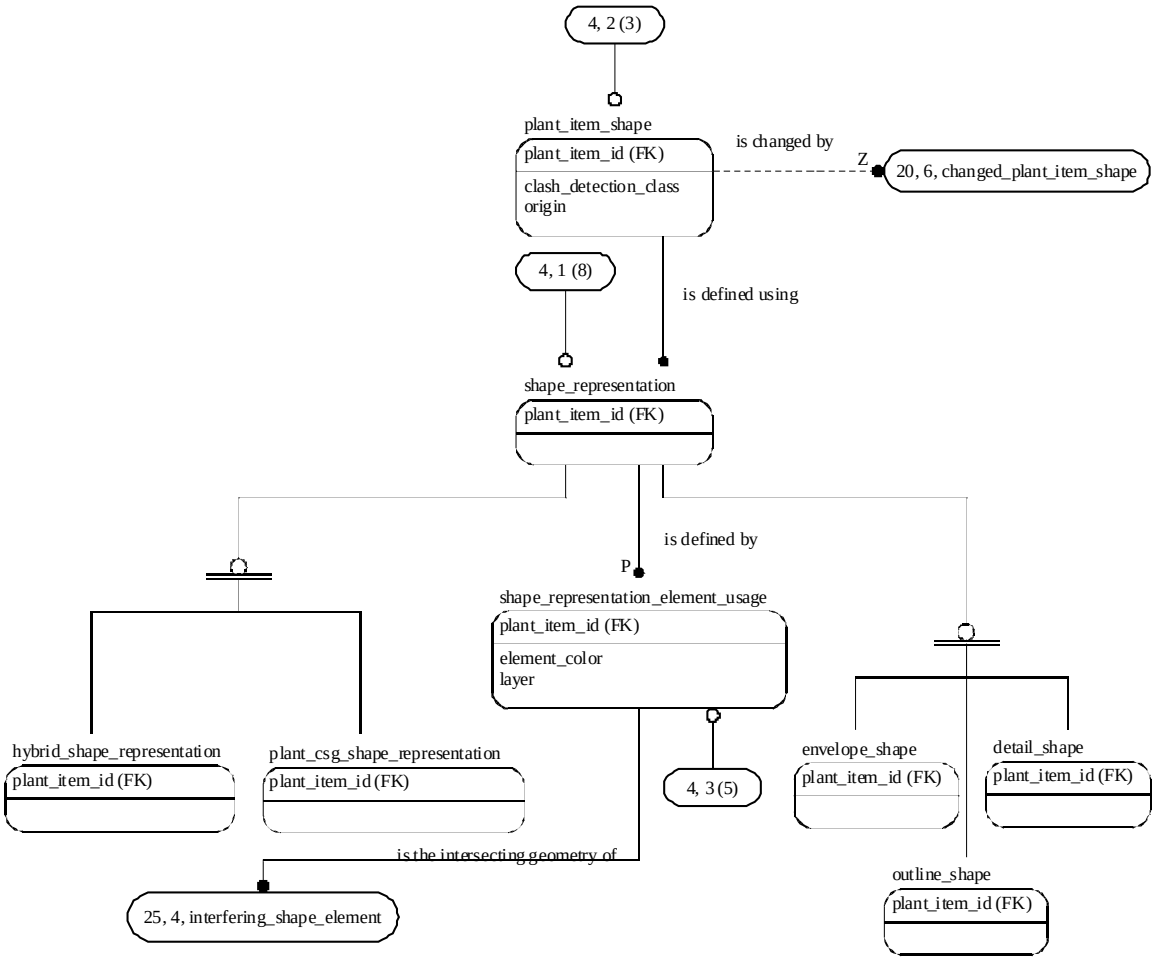

Figure G.5 - ARM diagram 4 of 42

© ISO 2001 — All rights reserved

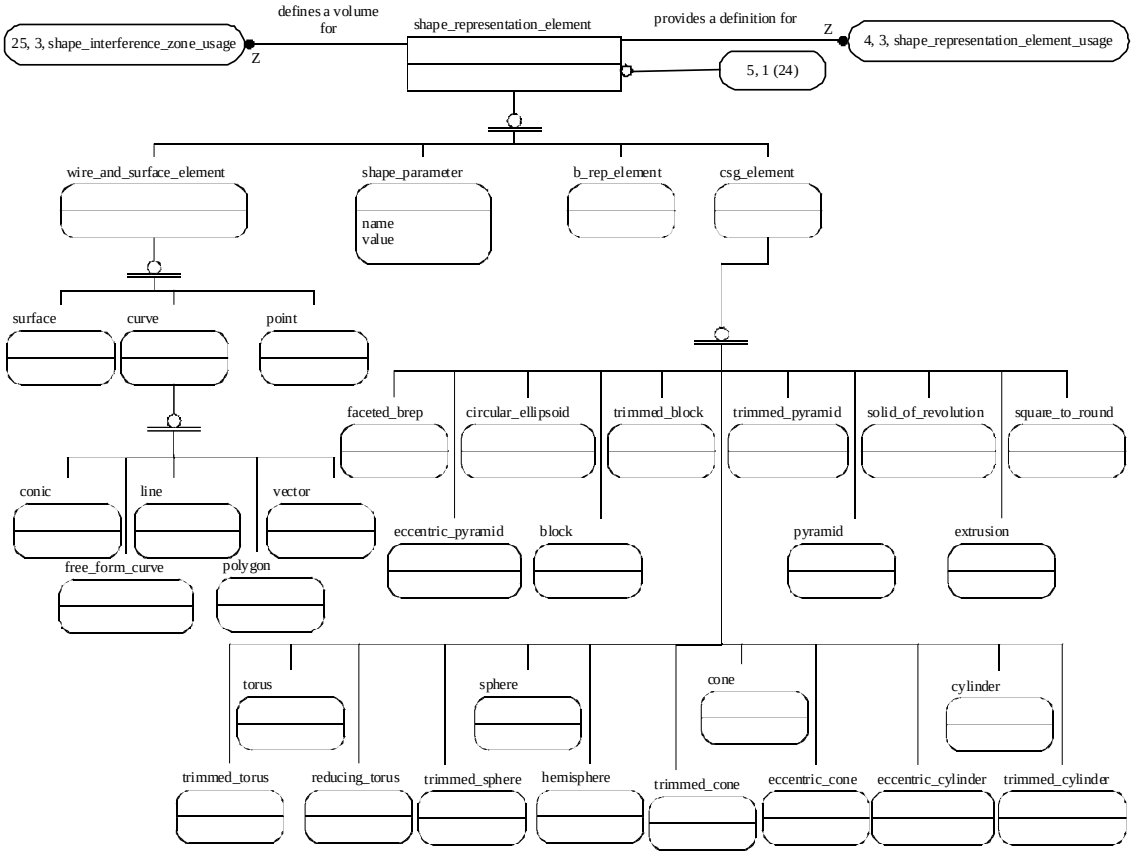

Figure G.6 - ARM diagram 5 of 42

 © ISO 2001 — All rights reserved

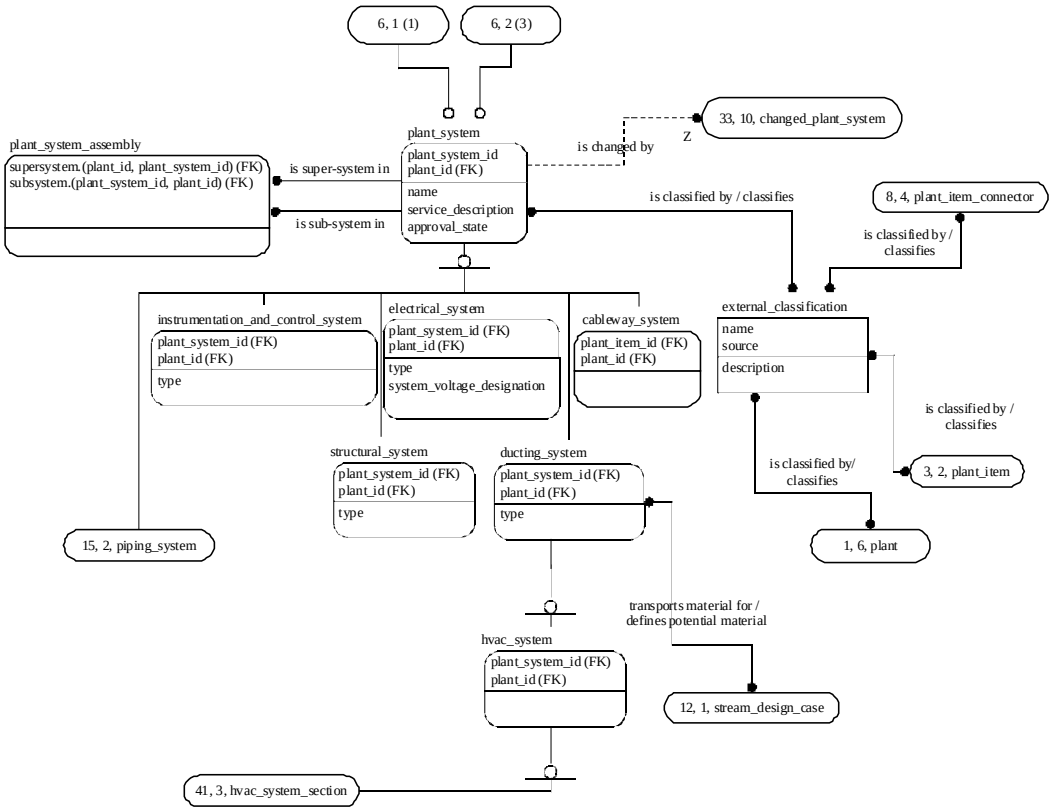

Figure G.7 - ARM diagram 6 of 42

© ISO 2001 — All rights reserved

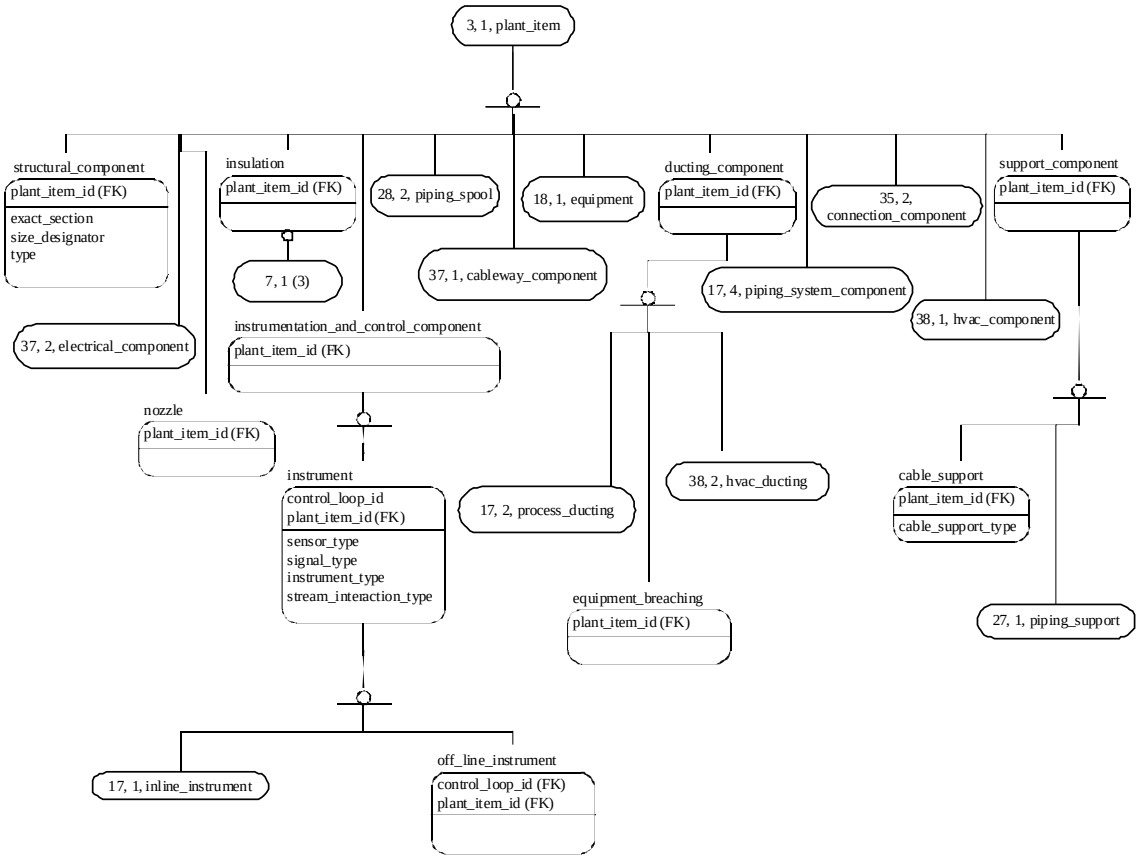

Figure G.8 - ARM diagram 7 of 42

 © ISO 2001 — All rights reserved

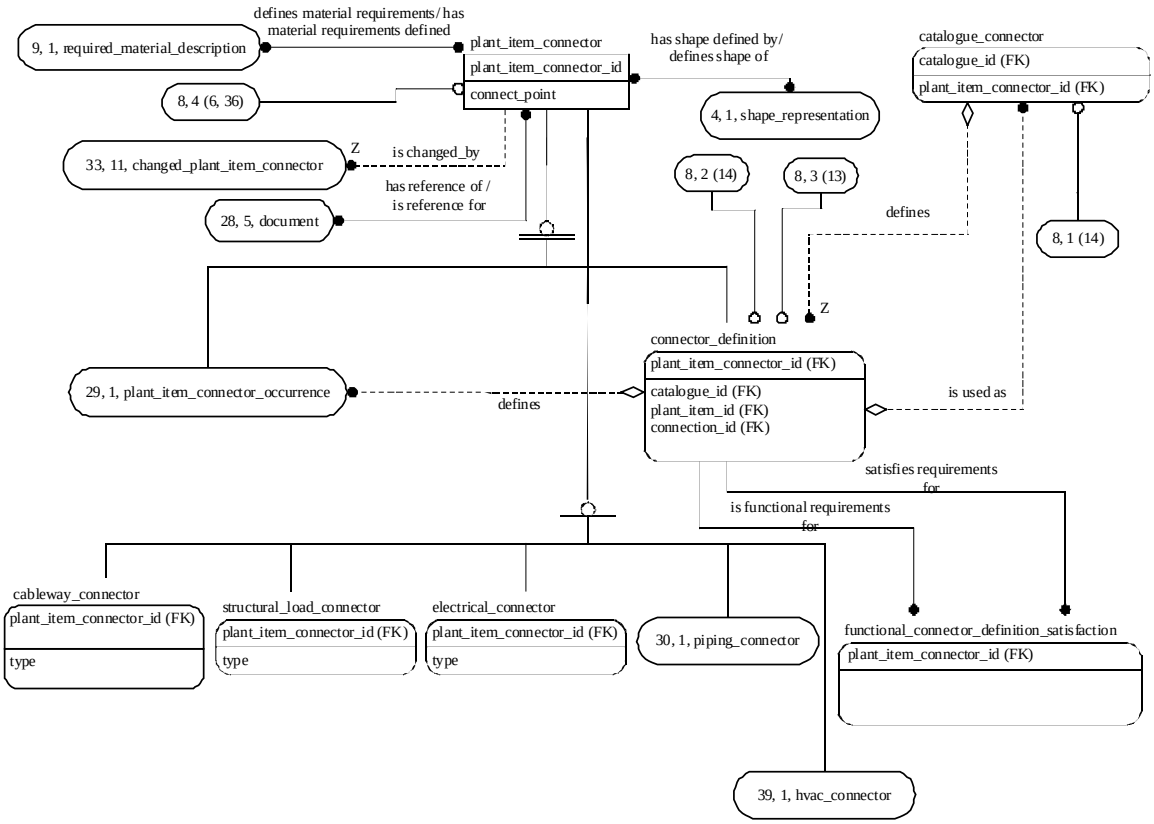

Figure G.9 - ARM diagram 8 of 42

© ISO 2001 — All rights reserved

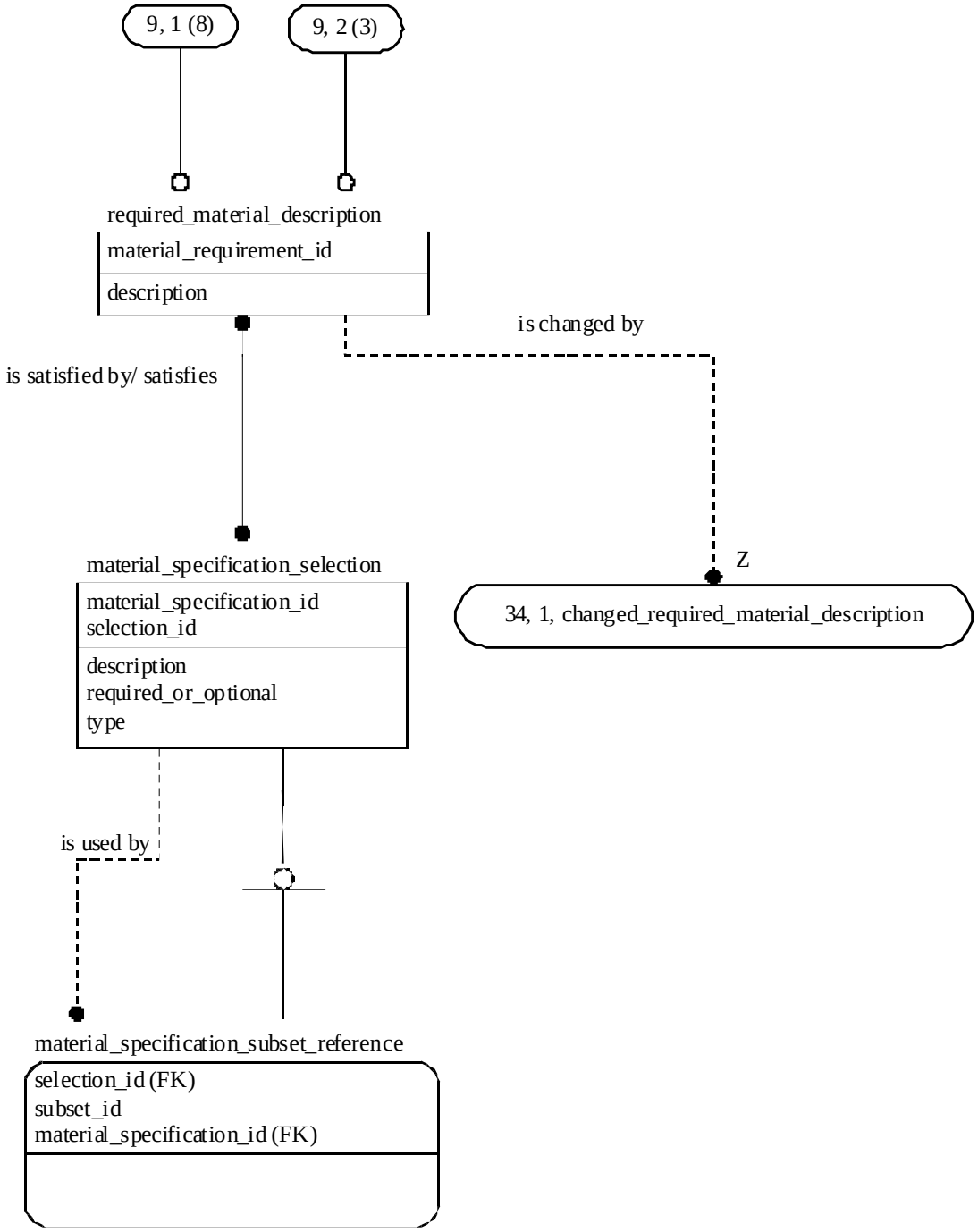

Figure G.10 - ARM diagram 9 of 42

 © ISO 2001 — All rights reserved

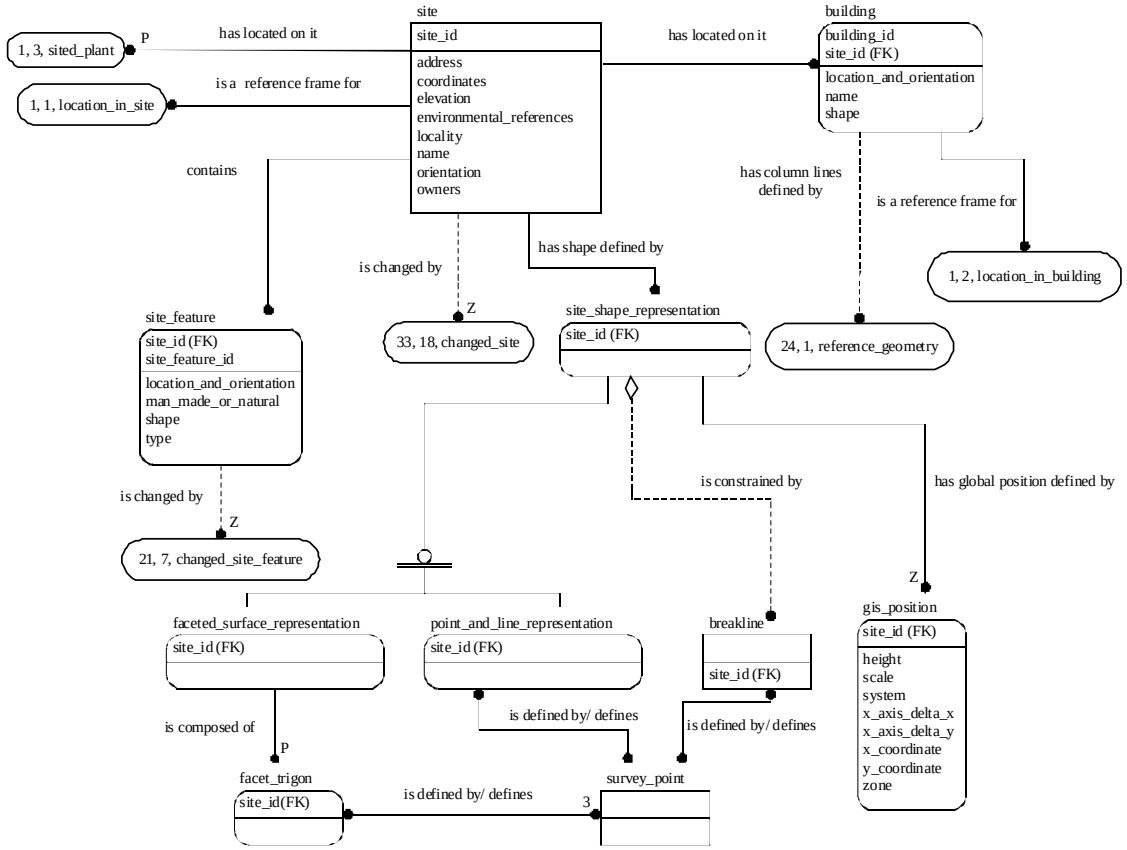

Figure G.11 - ARM diagram 10 of 42

© ISO 2001 — All rights reserved

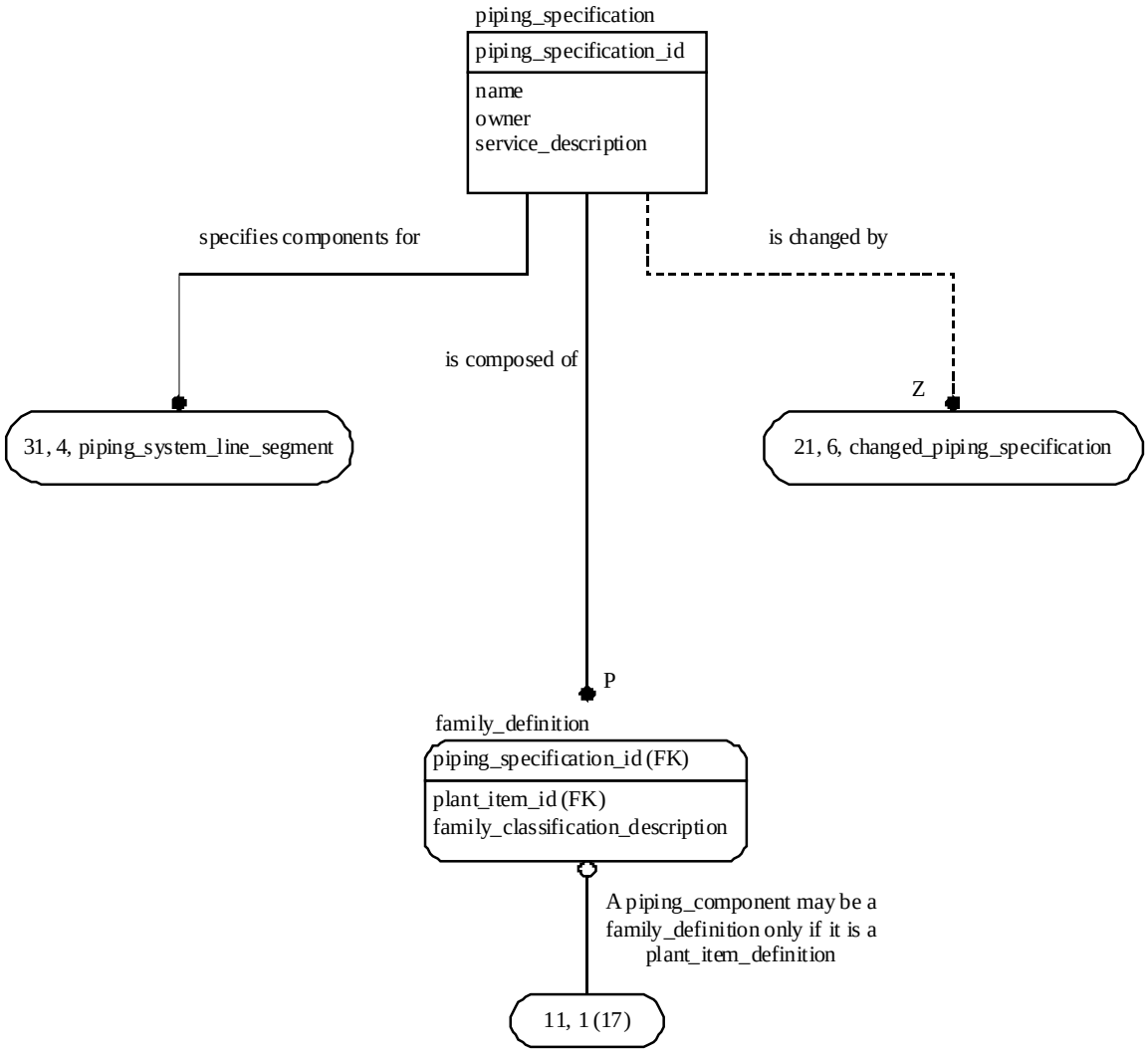

Figure G.12 - ARM diagram 11 of 42

 © ISO 2001 — All rights reserved

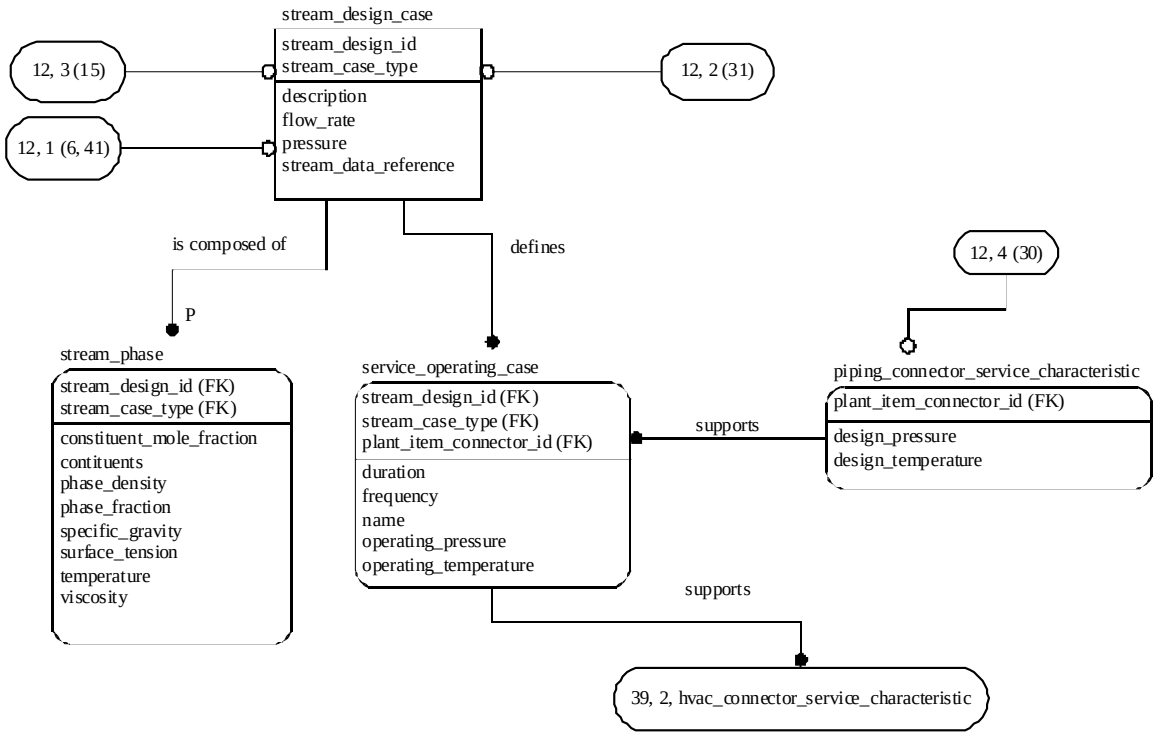

Figure G.13 - ARM diagram 12 of 42

© ISO 2001 — All rights reserved

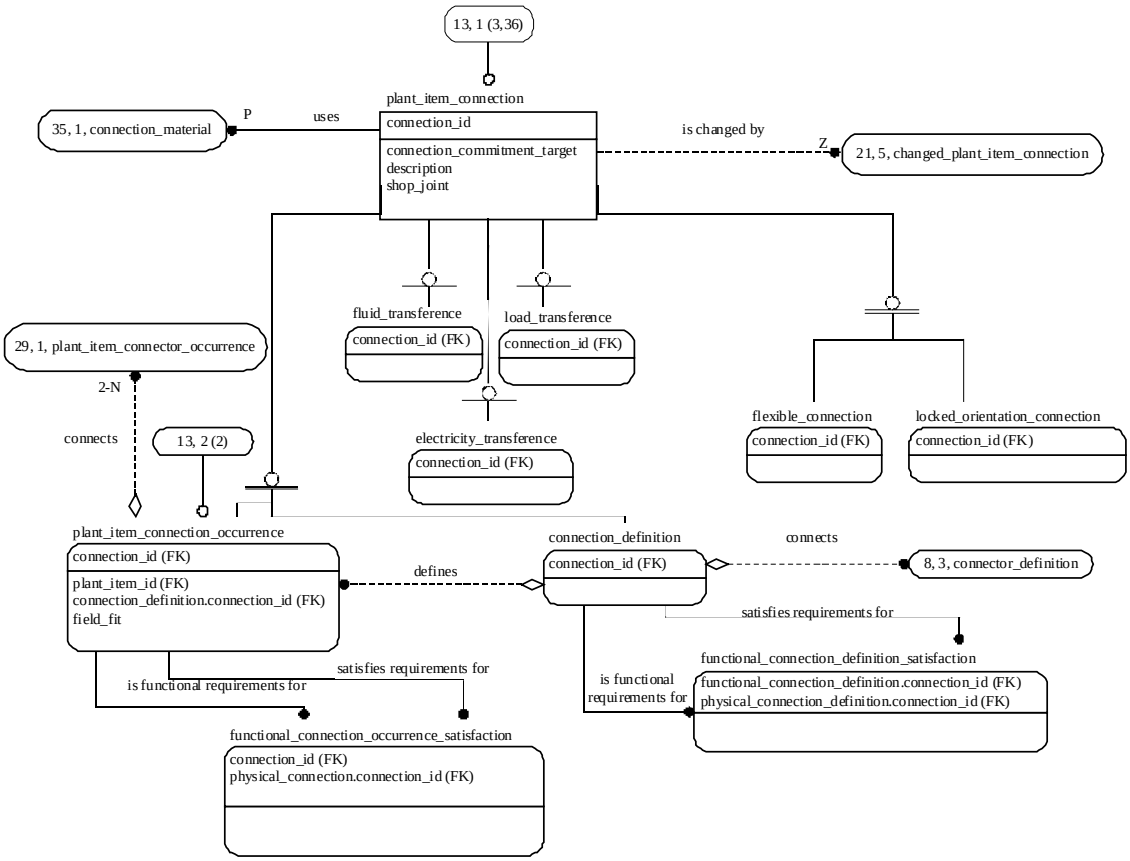

Figure G.14 - ARM diagram 13 of 42

 © ISO 2001 — All rights reserved

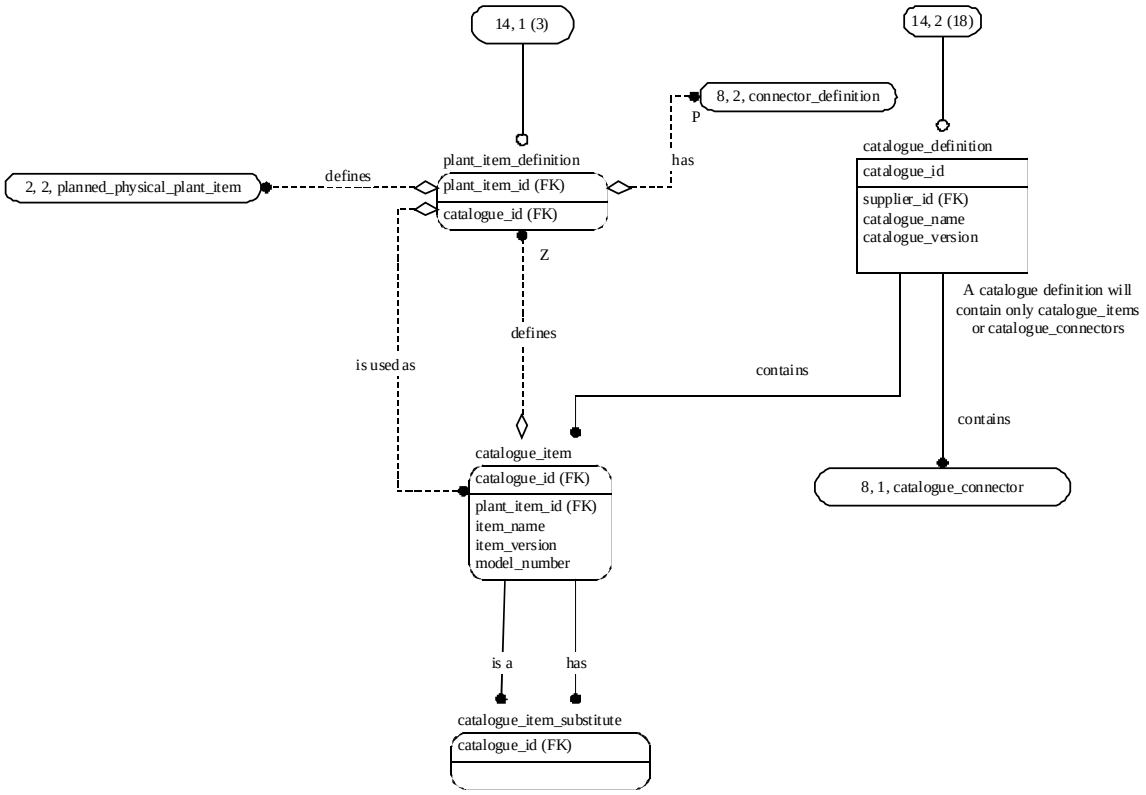

Figure G.15 - ARM diagram 14 of 42

© ISO 2001 — All rights reserved

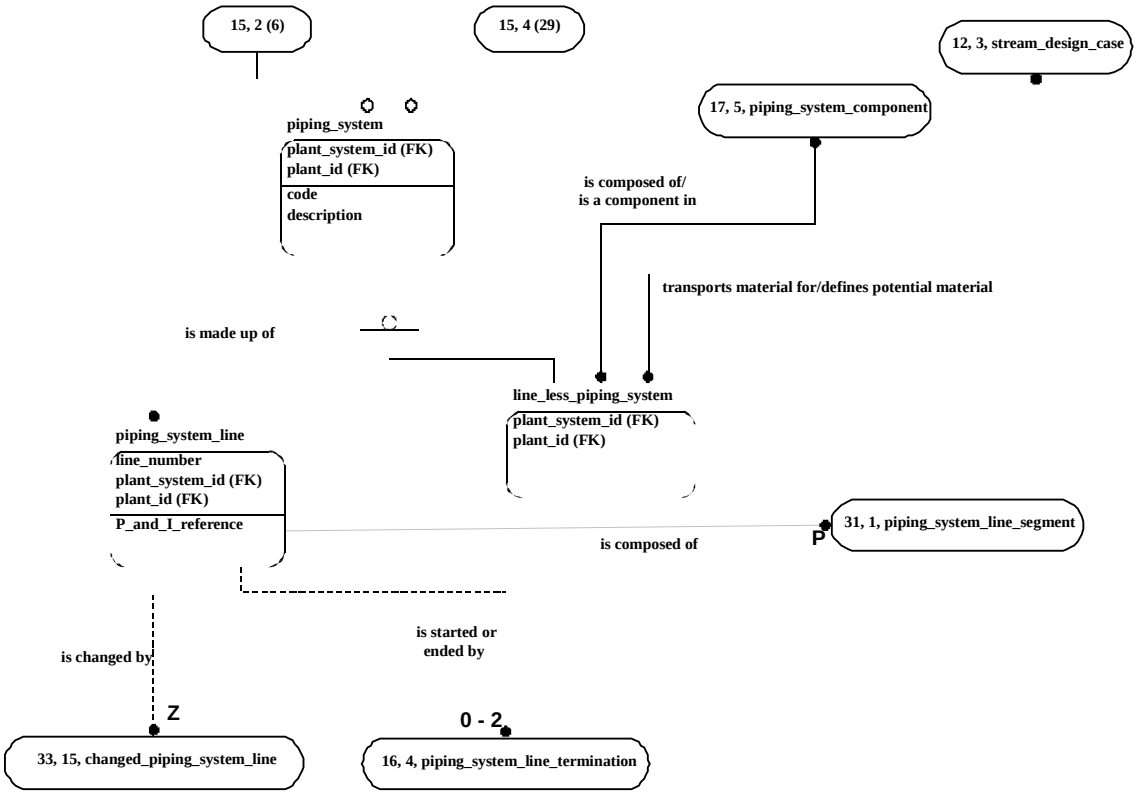

Figure G.16 - ARM diagram 15 of 42

 © ISO 2001 — All rights reserved

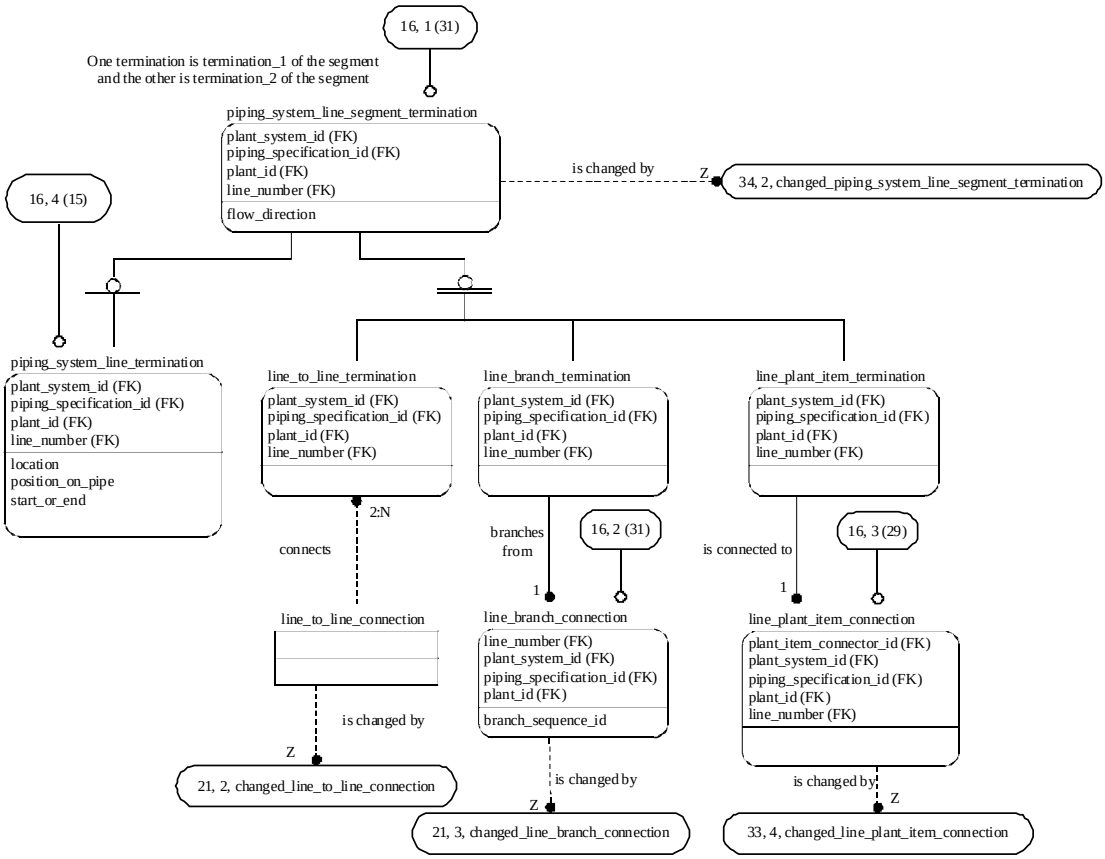

Figure G.17 - ARM diagram 16 of 42

© ISO 2001 — All rights reserved

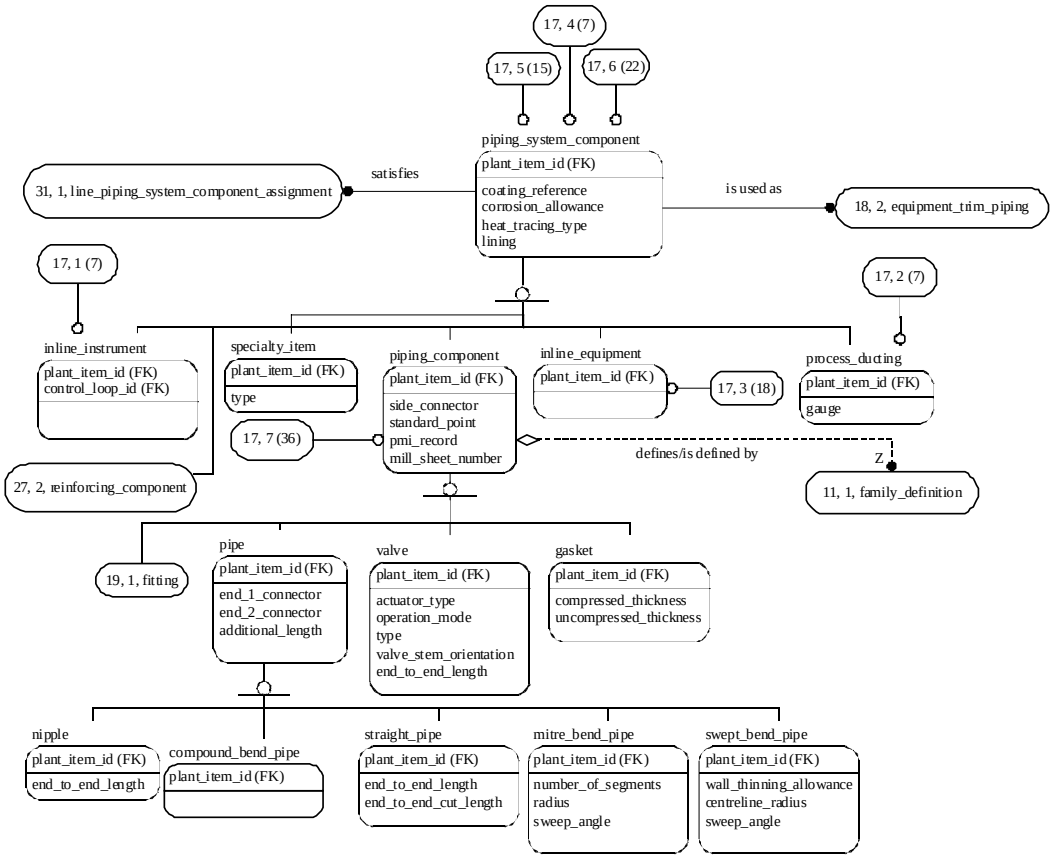

Figure G.18 - ARM diagram 17 of 42

 © ISO 2001 — All rights reserved

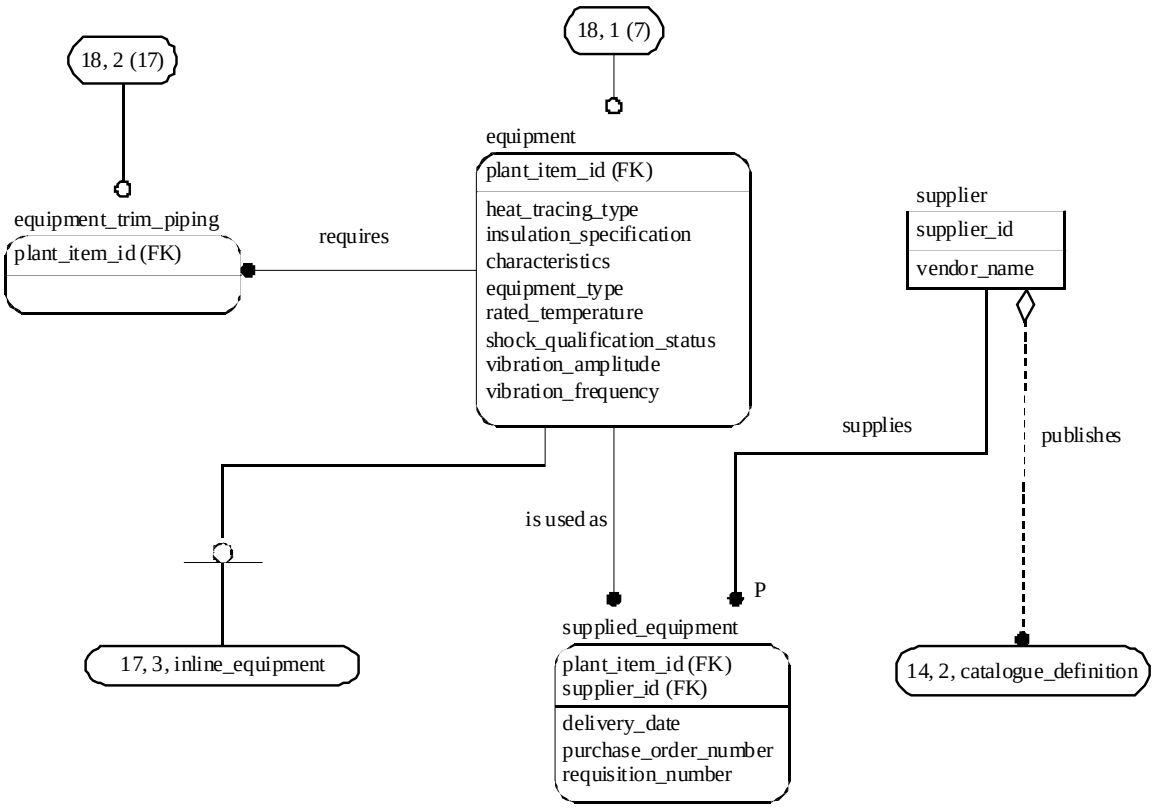

Figure G.19 - ARM diagram 18 of 42

© ISO 2001 — All rights reserved

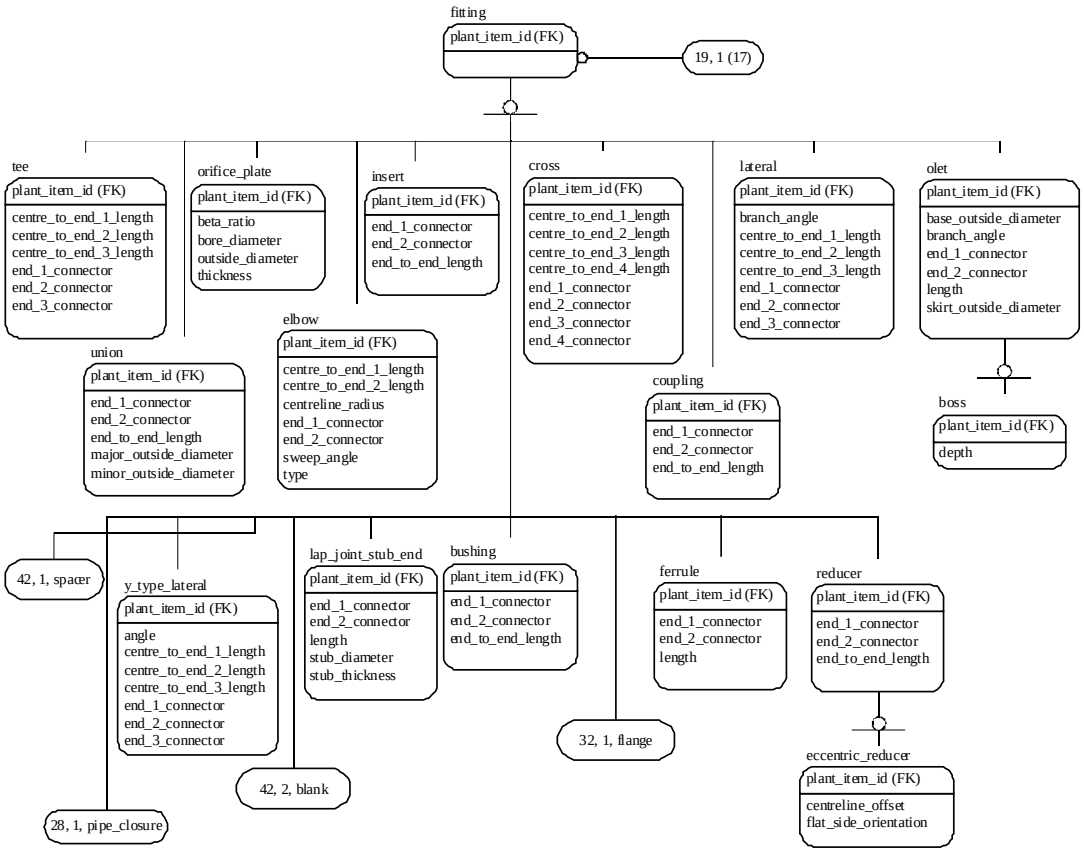

Figure G.20 - ARM diagram 19 of 42

 © ISO 2001 — All rights reserved

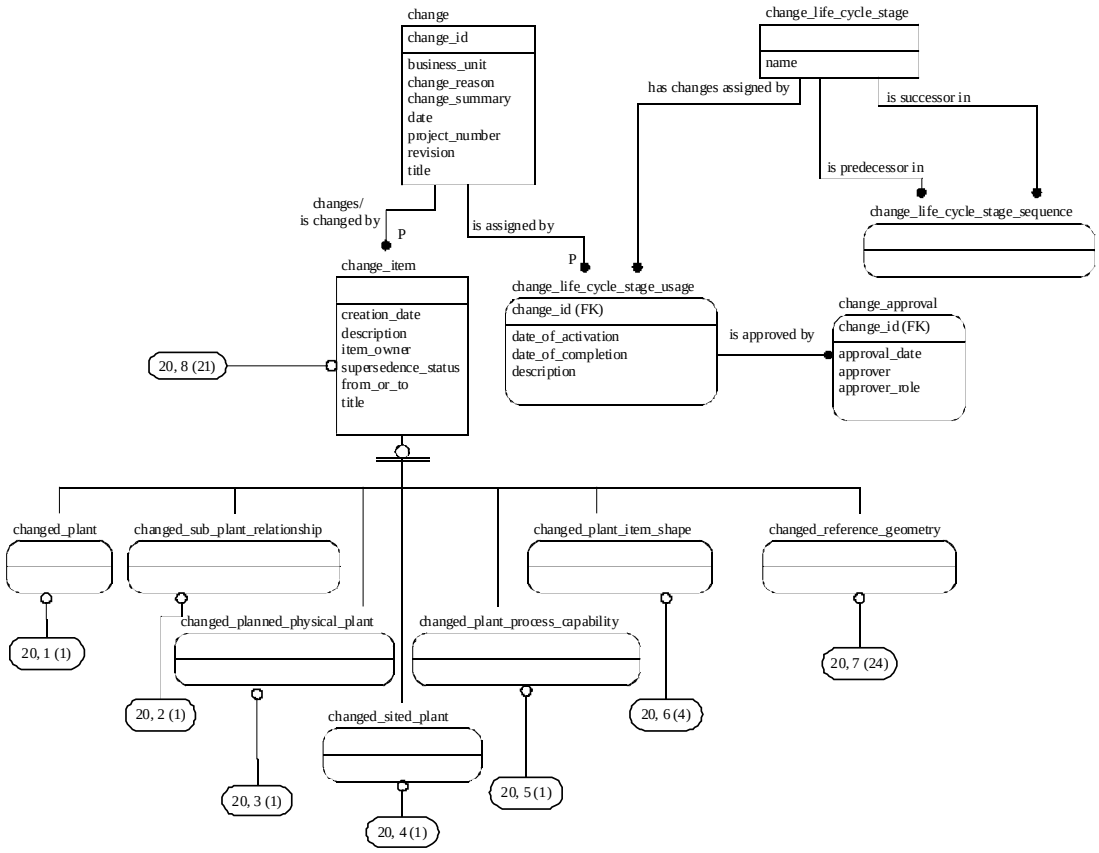

Figure G.21 - ARM diagram 20 of 42

© ISO 2001 — All rights reserved

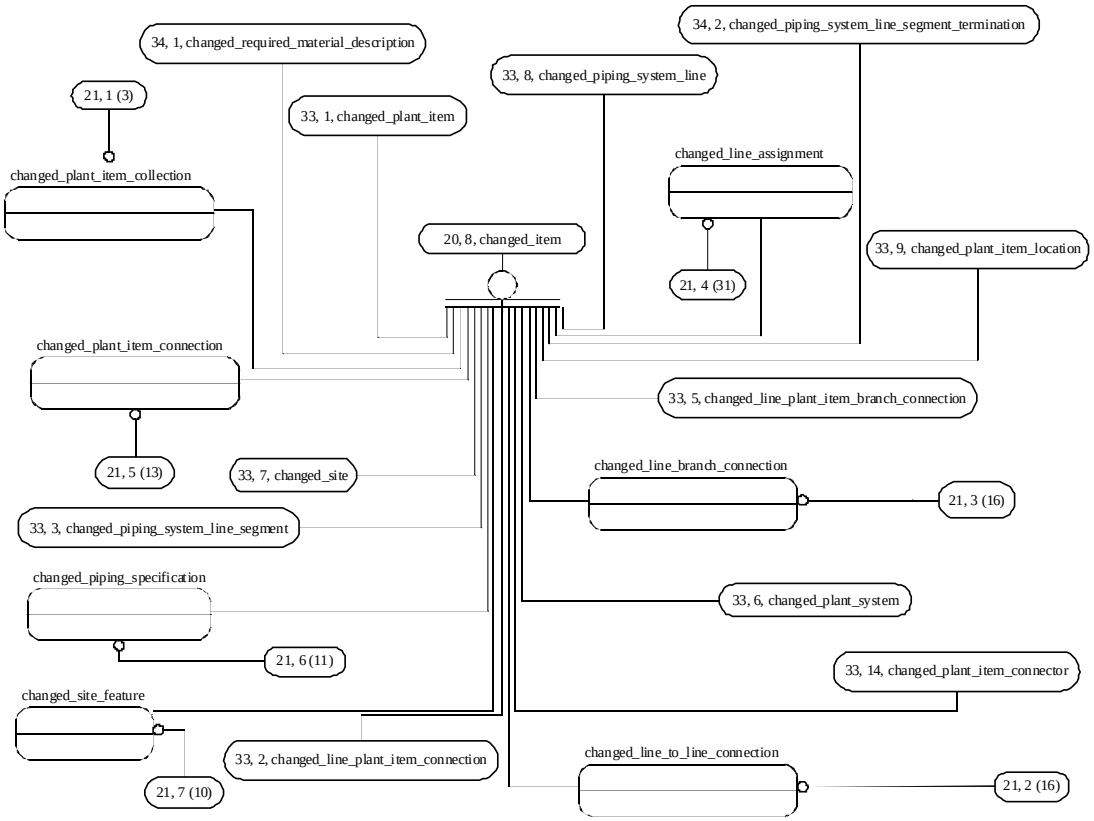

Figure G.22 - ARM diagram 21 of 42

 © ISO 2001 — All rights reserved

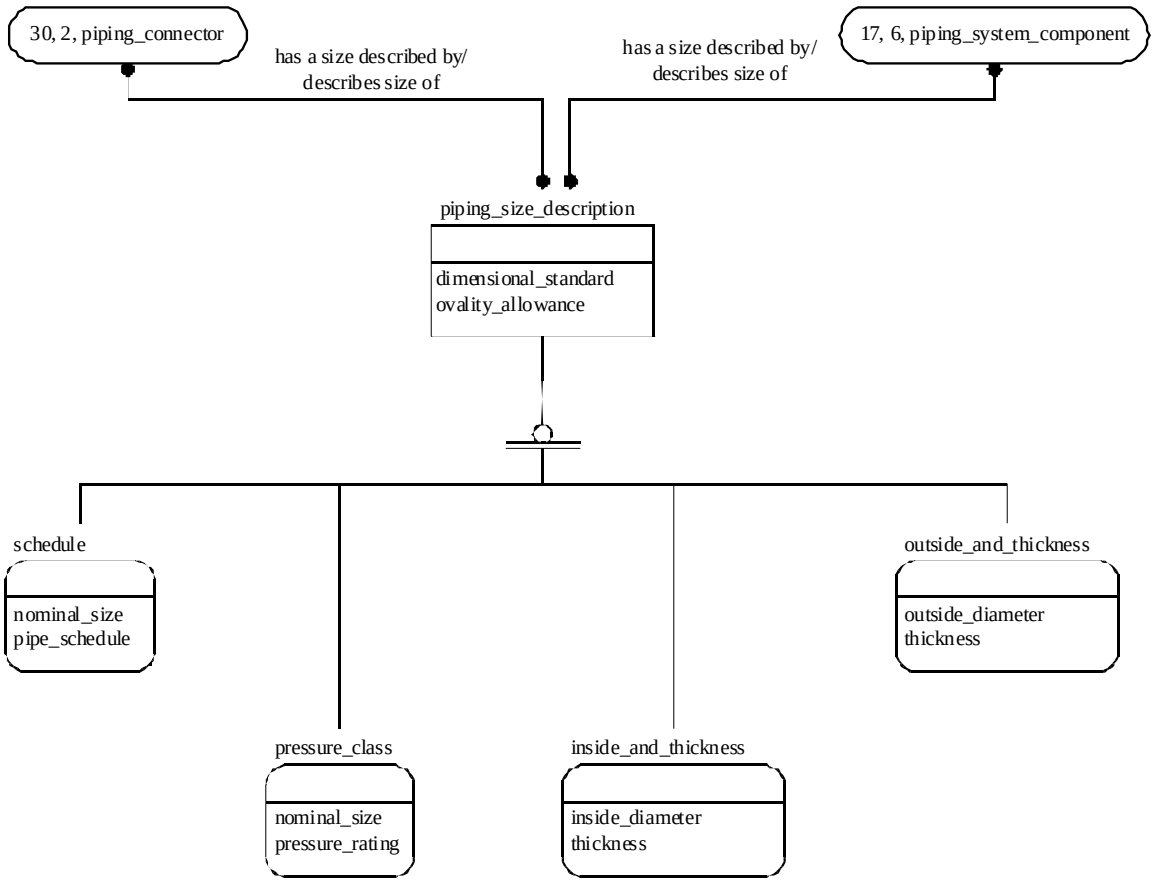

Figure G.23 - ARM diagram 22 of 42

© ISO 2001 — All rights reserved

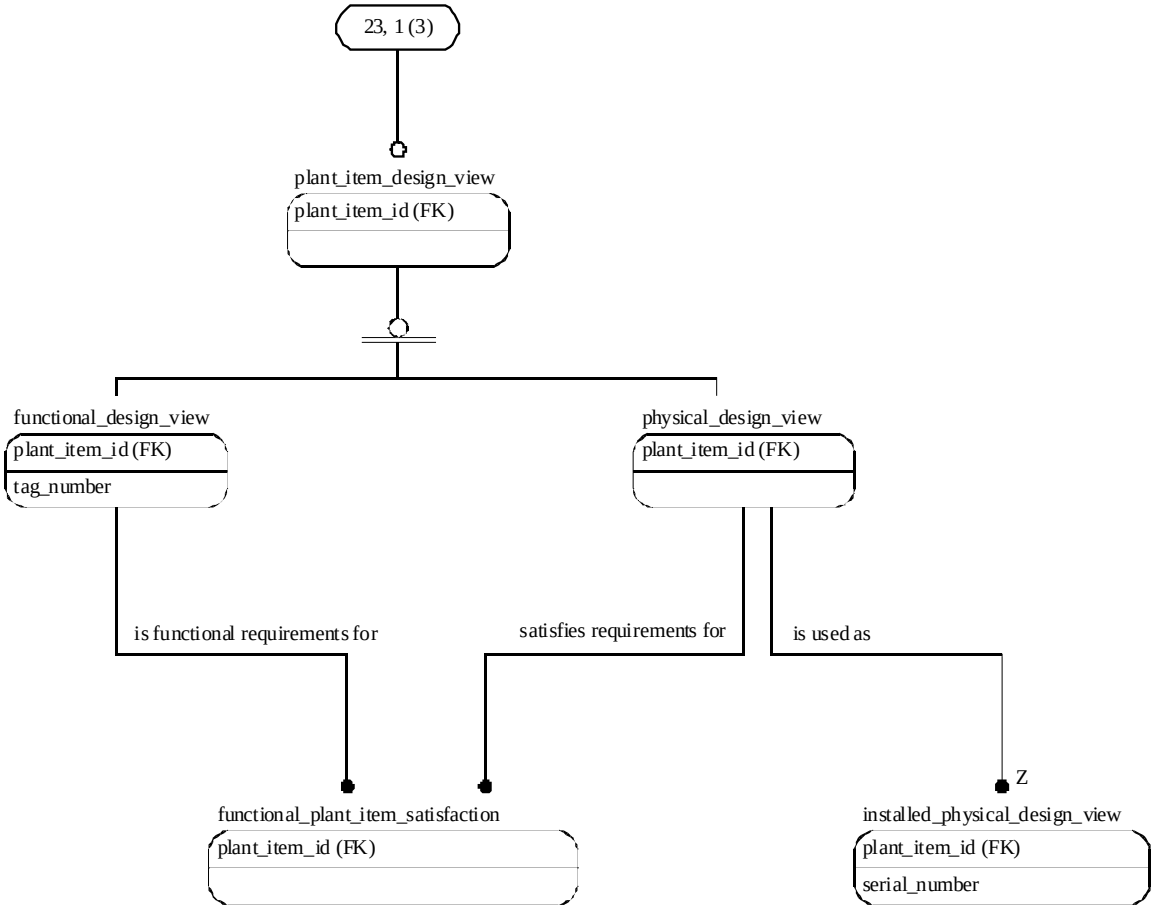

Figure G.24 - ARM diagram 23 of 42

 © ISO 2001 — All rights reserved

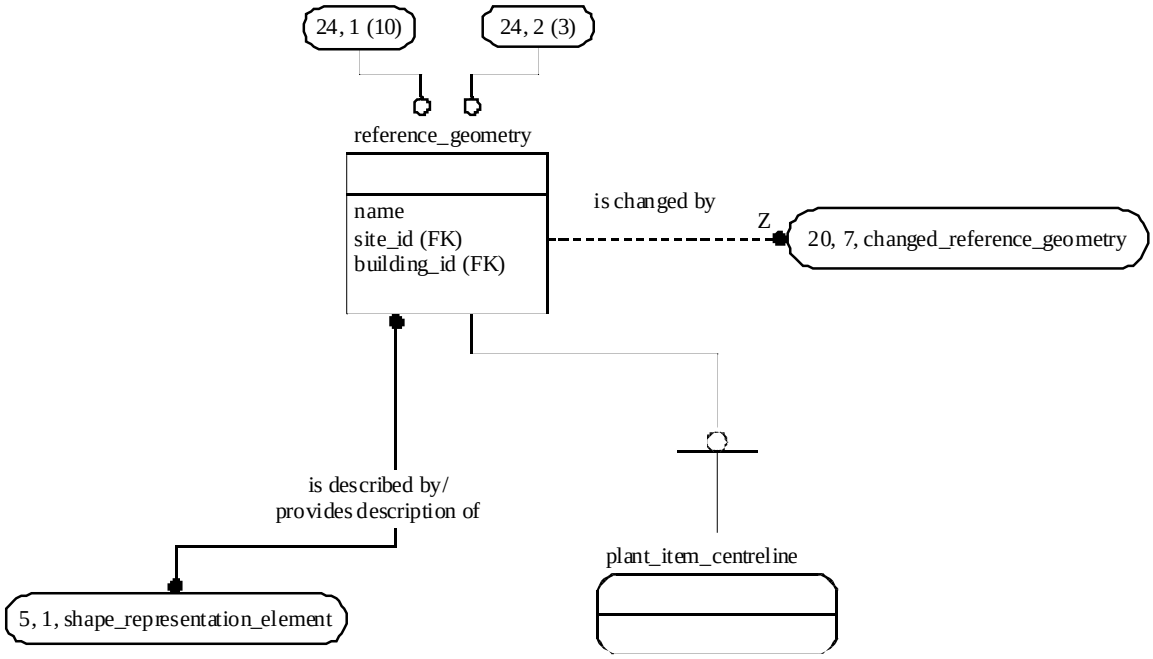

Figure G.25 - ARM diagram 24 of 42

© ISO 2001 — All rights reserved

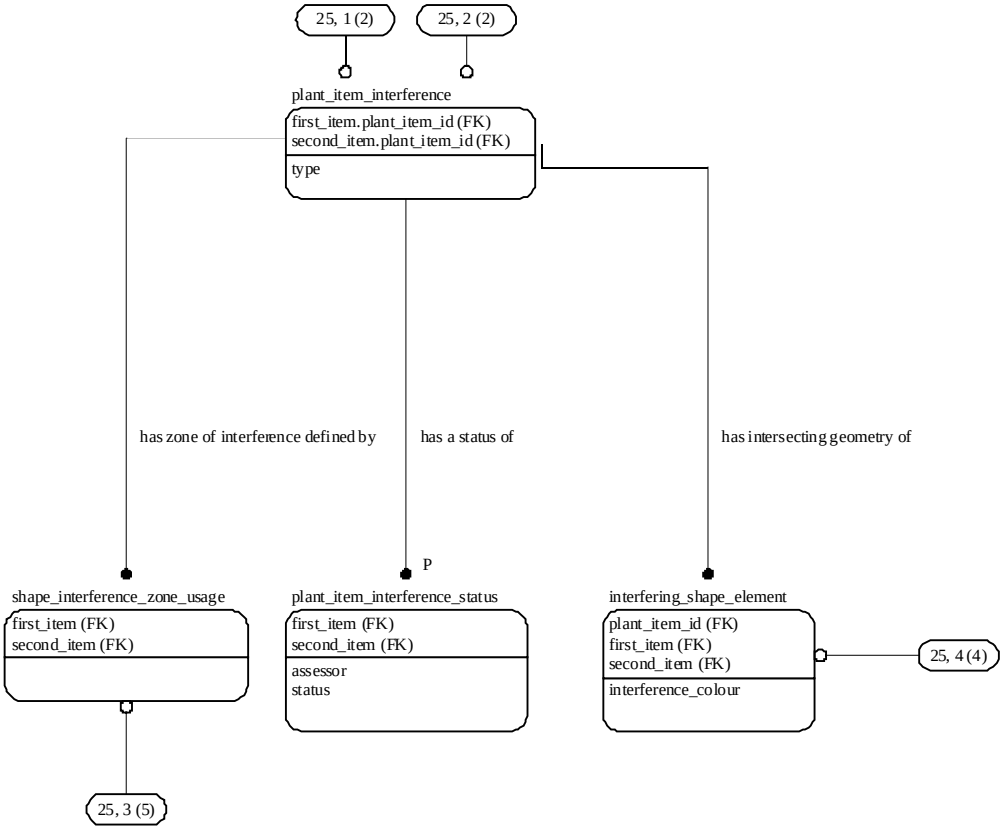

Figure G.26 - ARM diagram 25 of 42

 © ISO 2001 — All rights reserved

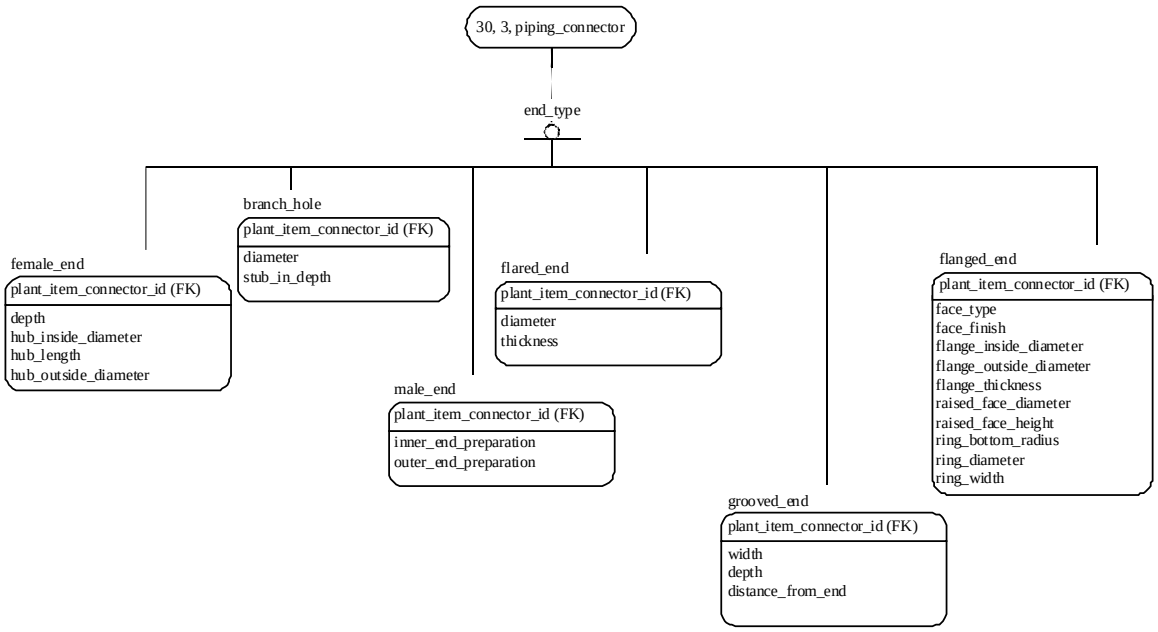

Figure G.27 - ARM diagram 26 of 42

© ISO 2001 — All rights reserved

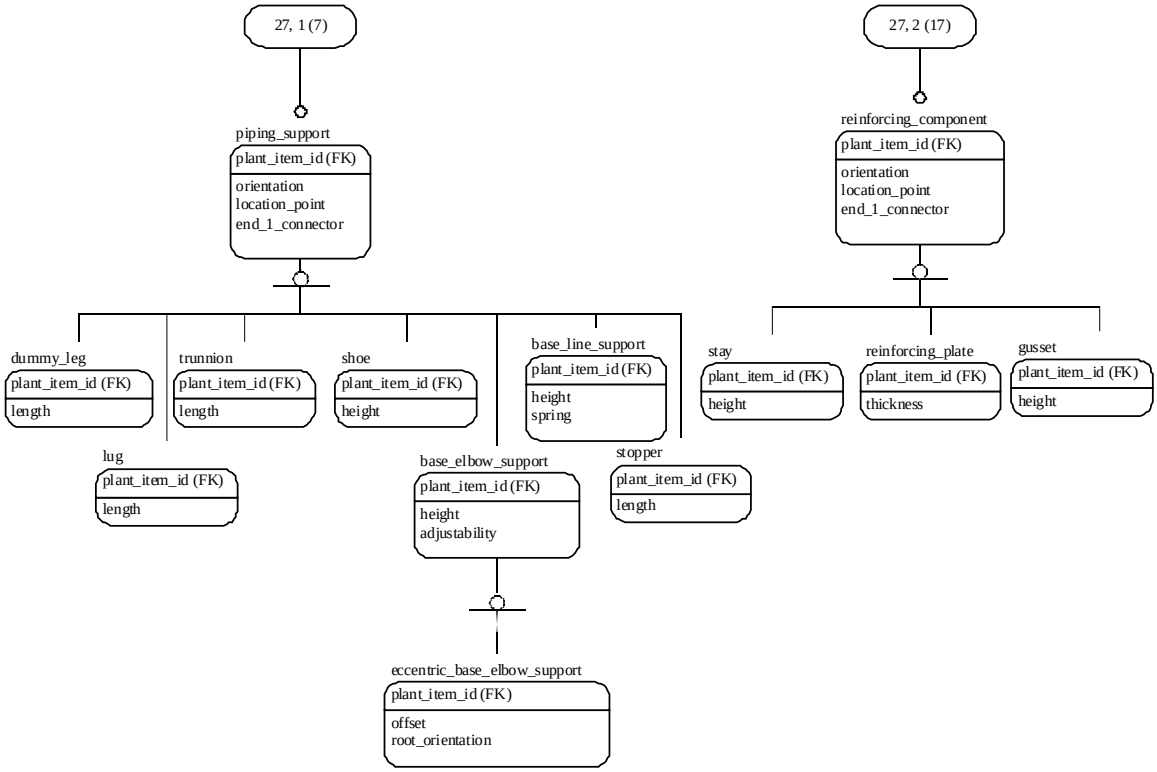

Figure G.28 - ARM diagram 27 of 42

 © ISO 2001 — All rights reserved

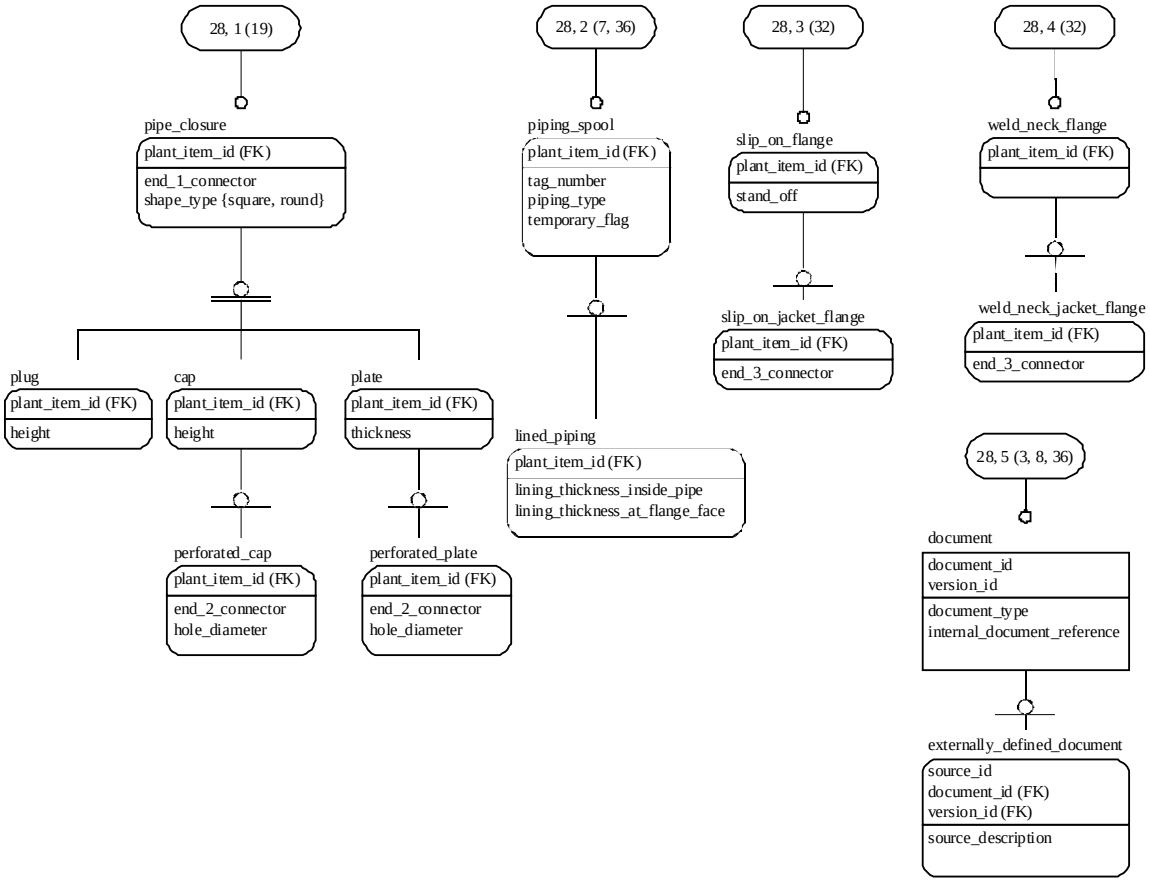

Figure G.29 - ARM diagram 28 of 42

© ISO 2001 — All rights reserved

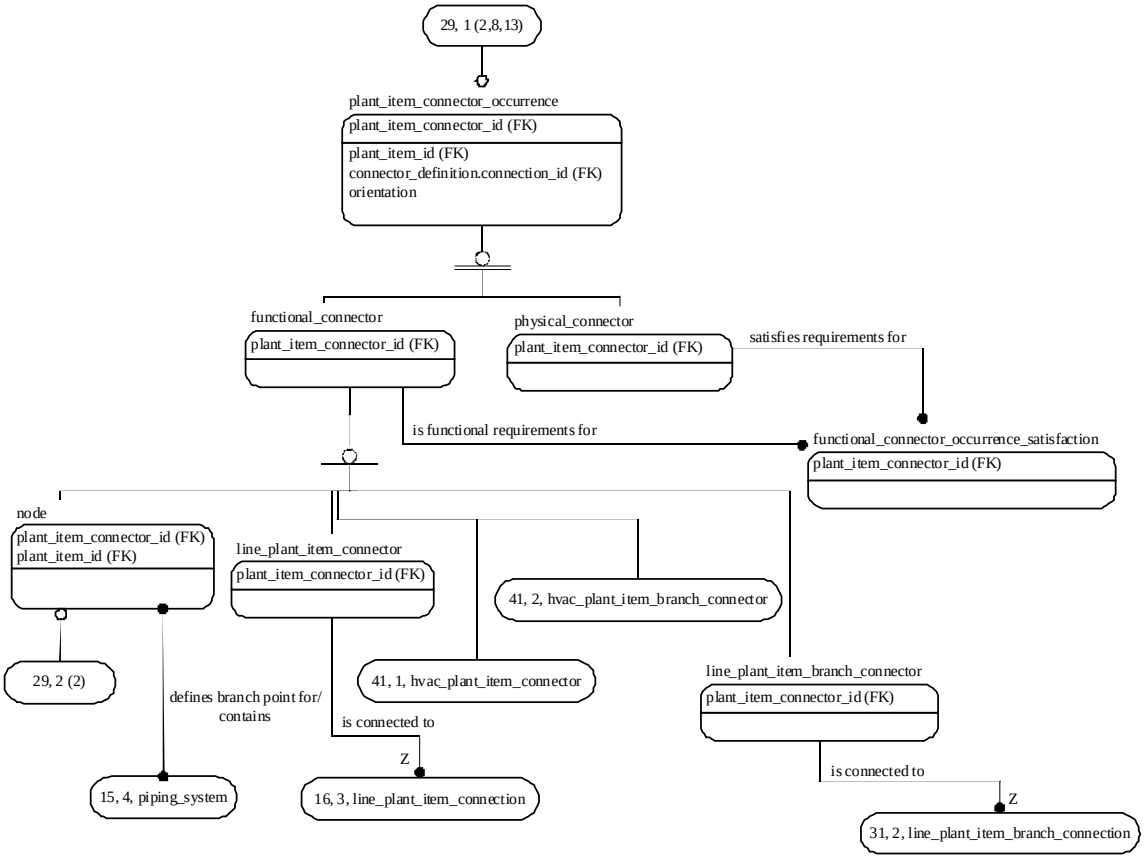

Figure G.30 - ARM diagram 29 of 42

 © ISO 2001 — All rights reserved

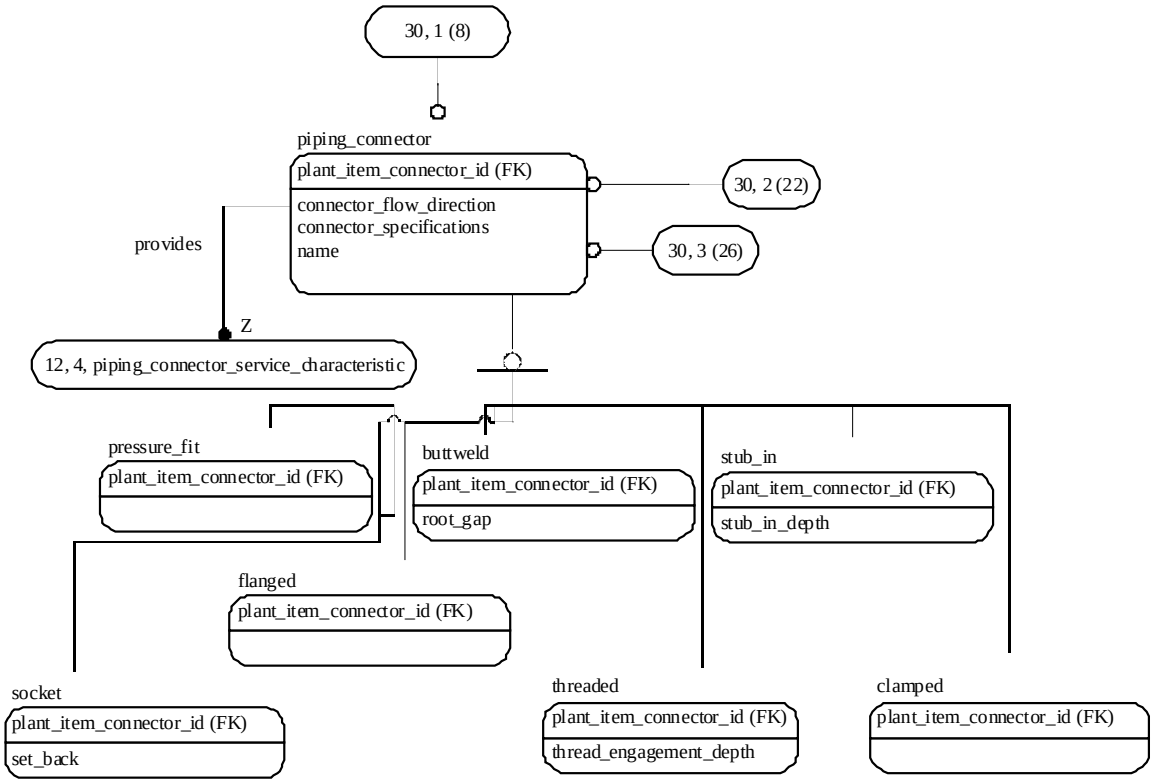

Figure G.31 - ARM diagram 30 or 42

© ISO 2001 — All rights reserved

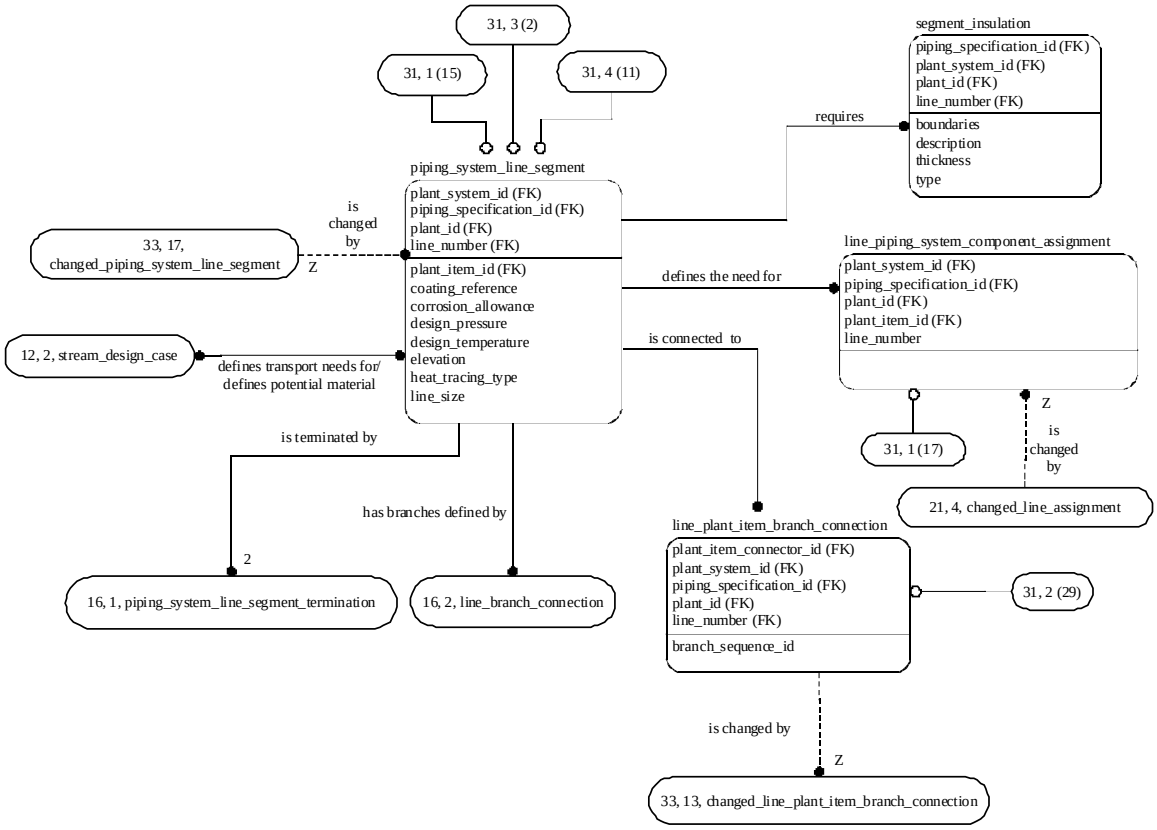

Figure G.32 - ARM diagram 31 of 42

 © ISO 2001 — All rights reserved

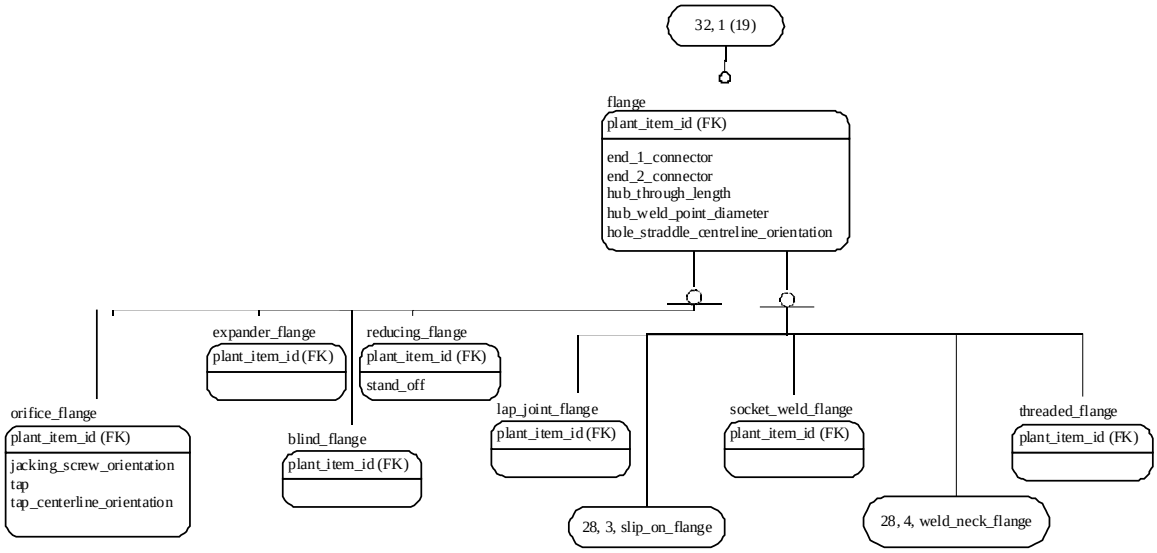

Figure G.33 - ARM diagram 32 of 42

© ISO 2001 — All rights reserved

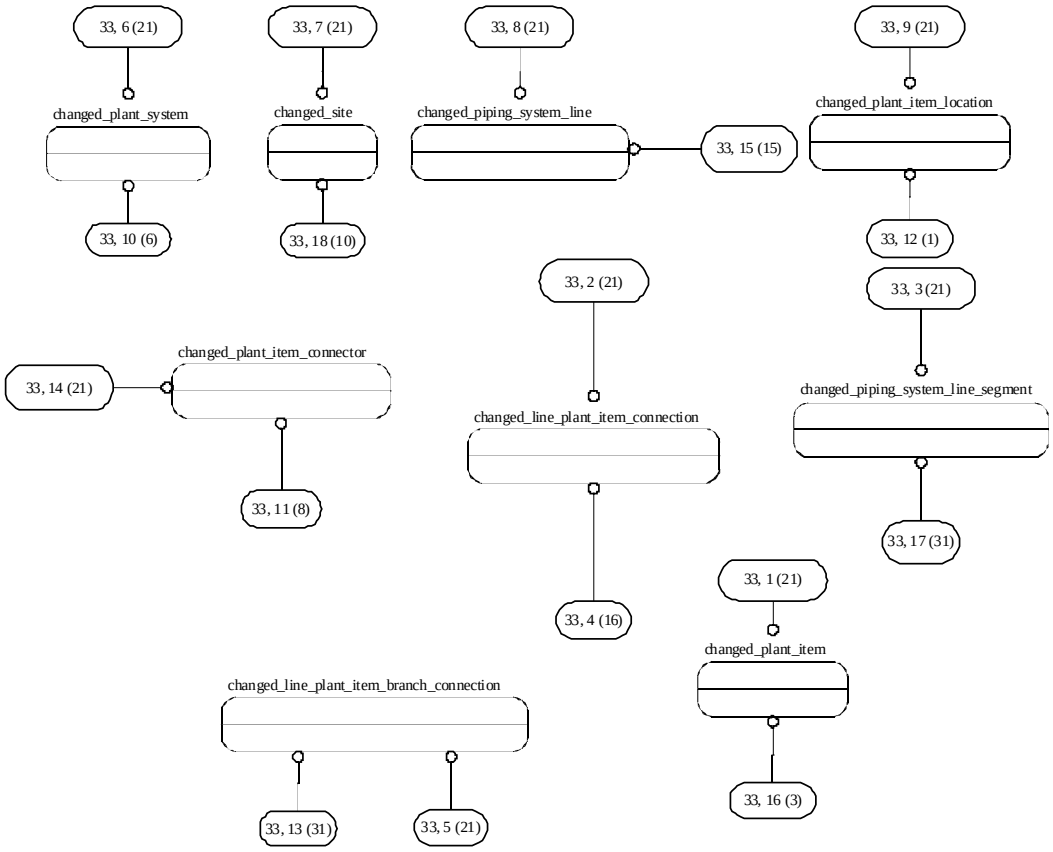

Figure G.34 - ARM diagram 33 of 42

 © ISO 2001 — All rights reserved

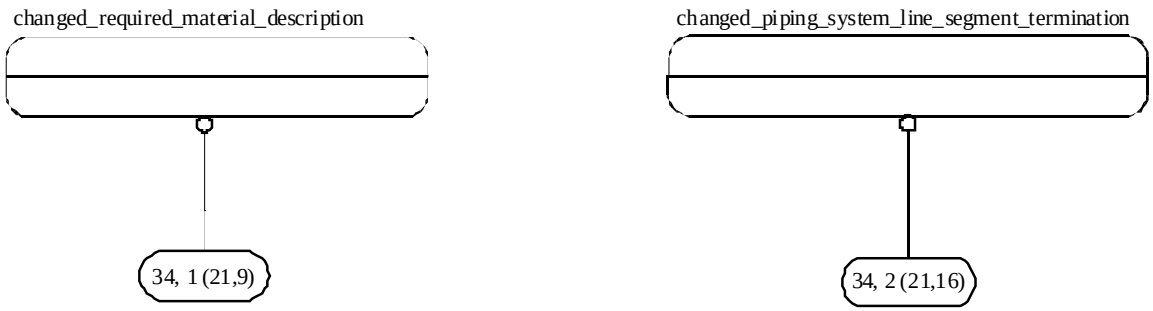

Figure G.35 - ARM diagram 34 of 42

© ISO 2001 — All rights reserved

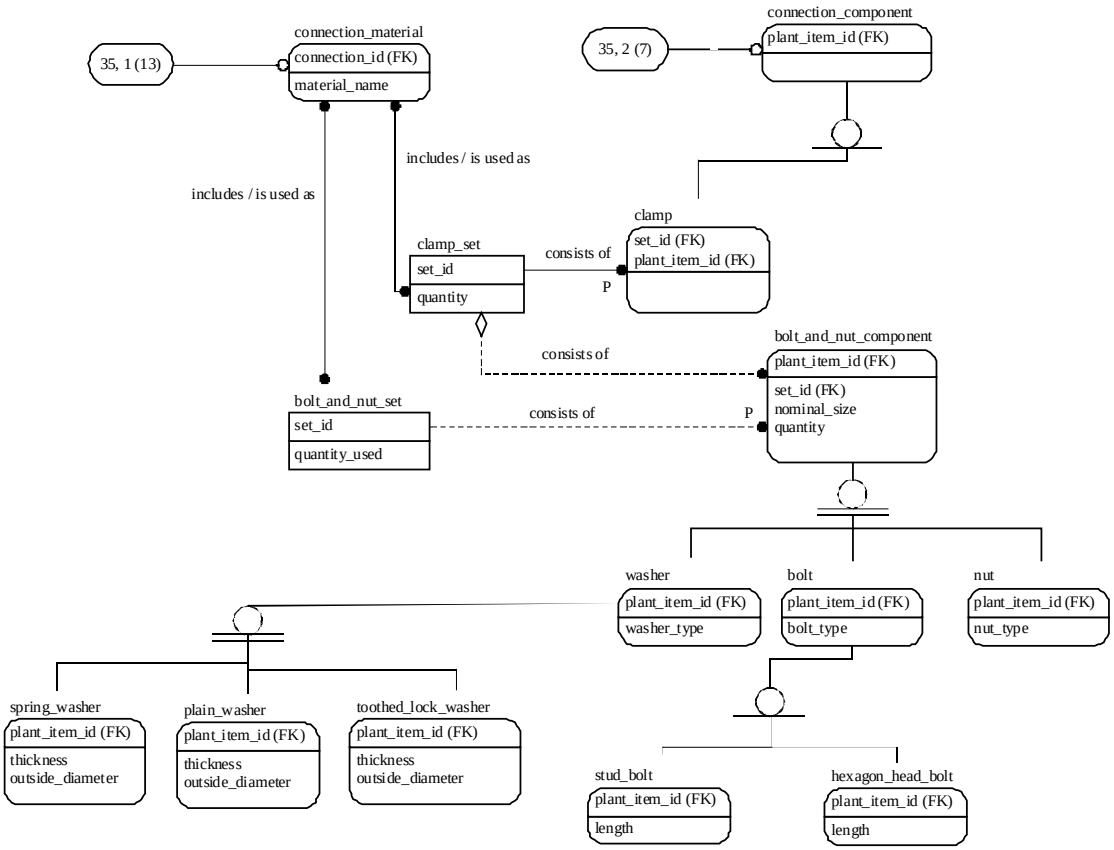

Figure G.36 - ARM diagram 35 of 42

 © ISO 2001 — All rights reserved

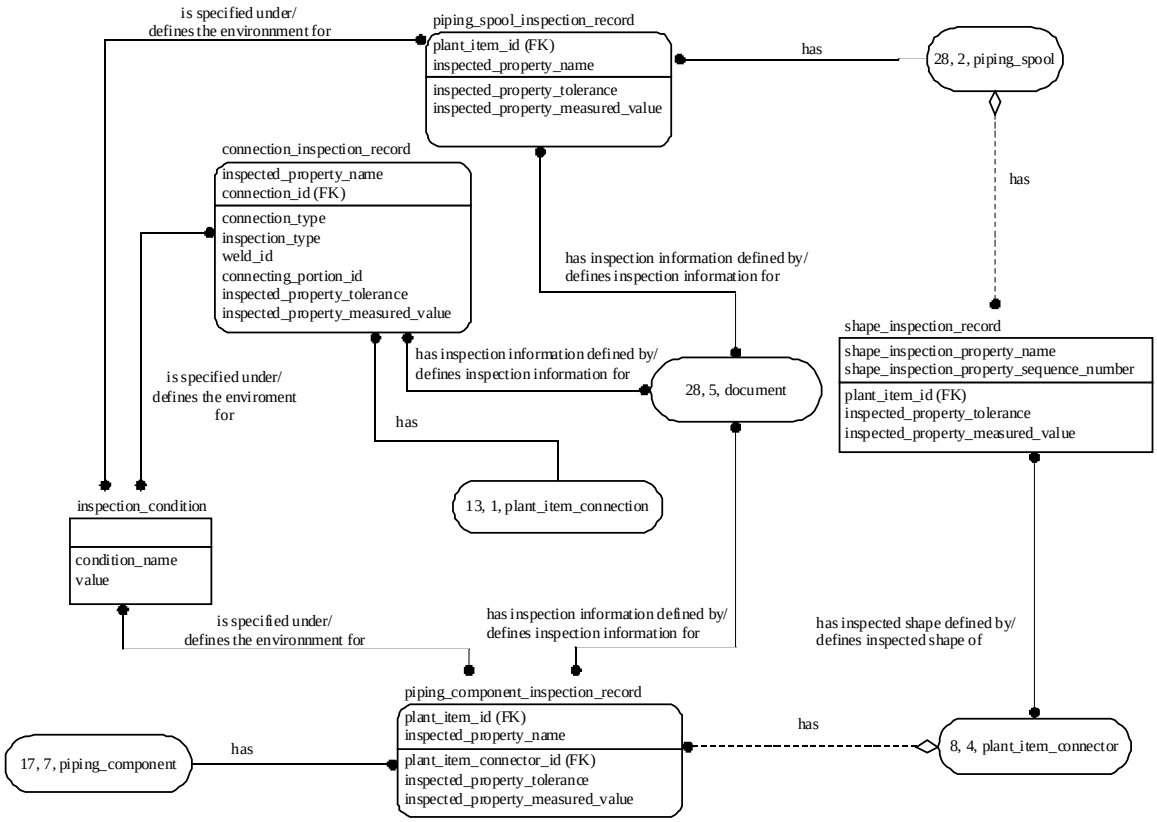

Figure G.37 - ARM diagram 36 of 42

© ISO 2001 — All rights reserved

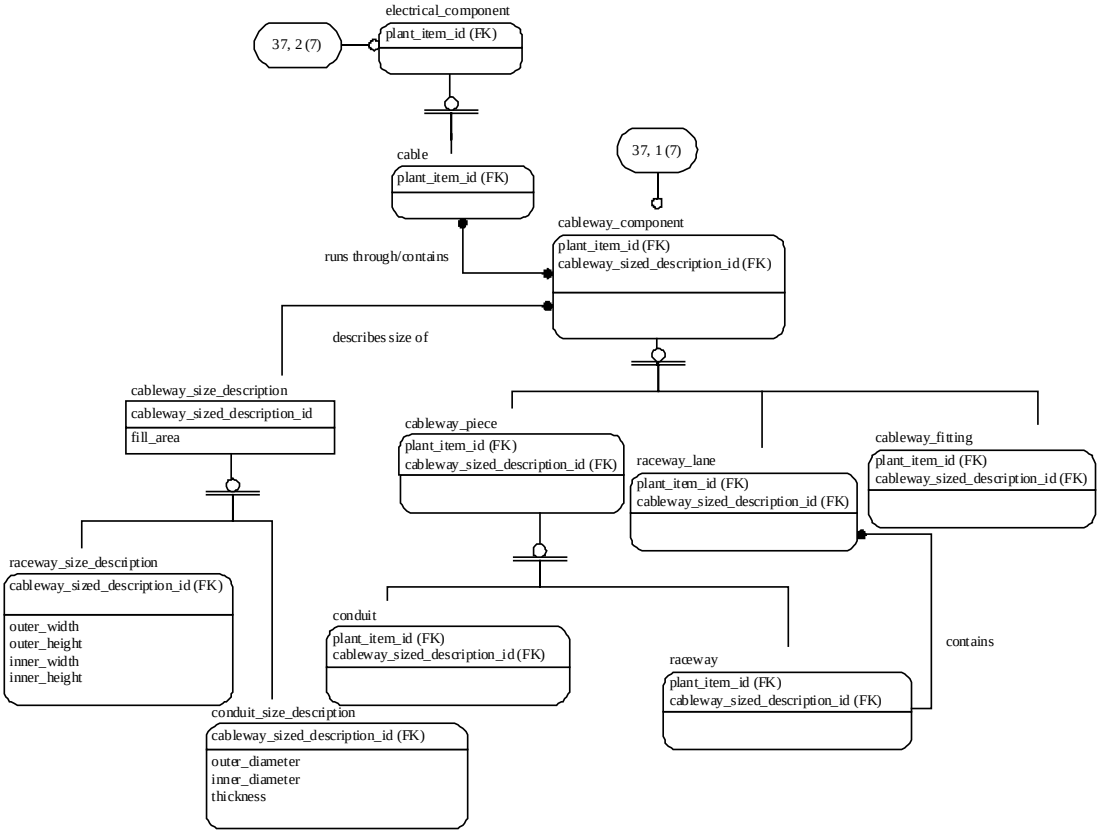

Figure G.38 - ARM diagram 37 of 42

 © ISO 2001 — All rights reserved

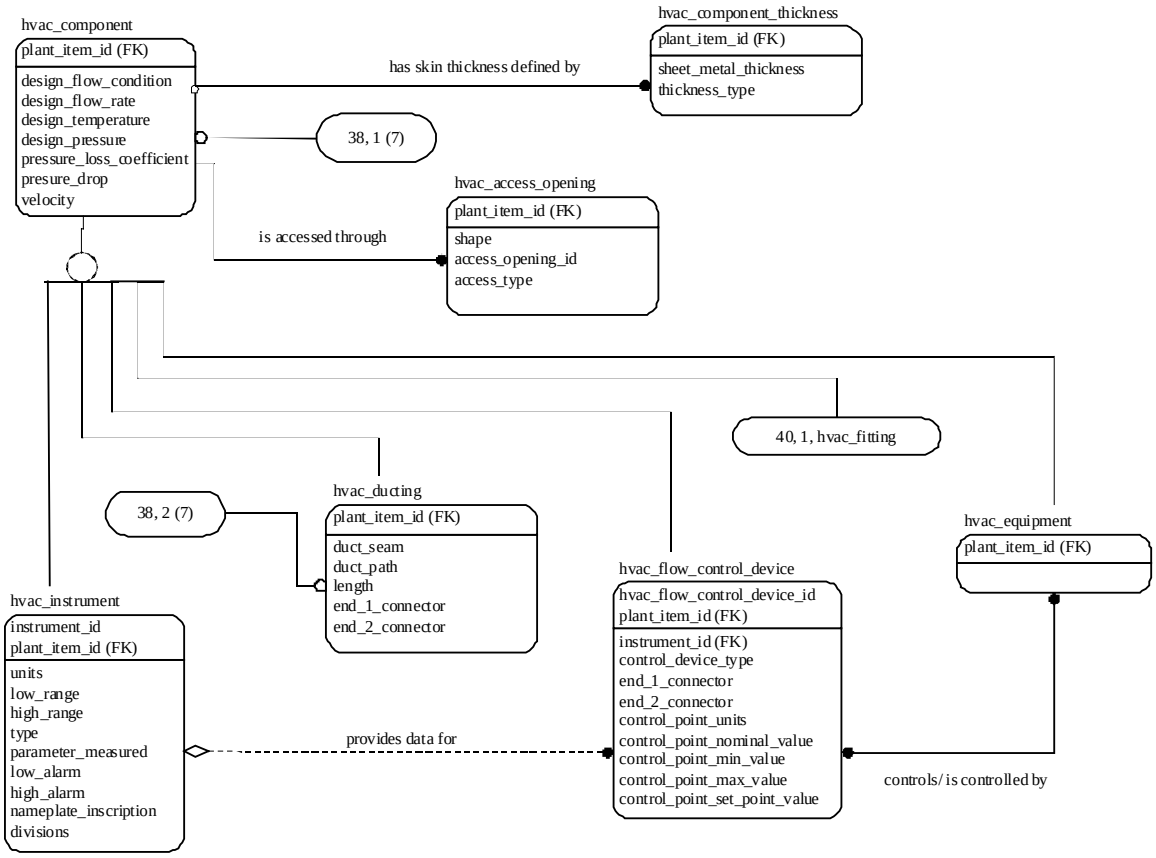

Figure G.39 - ARM diagram 38 of 42

© ISO 2001 — All rights reserved

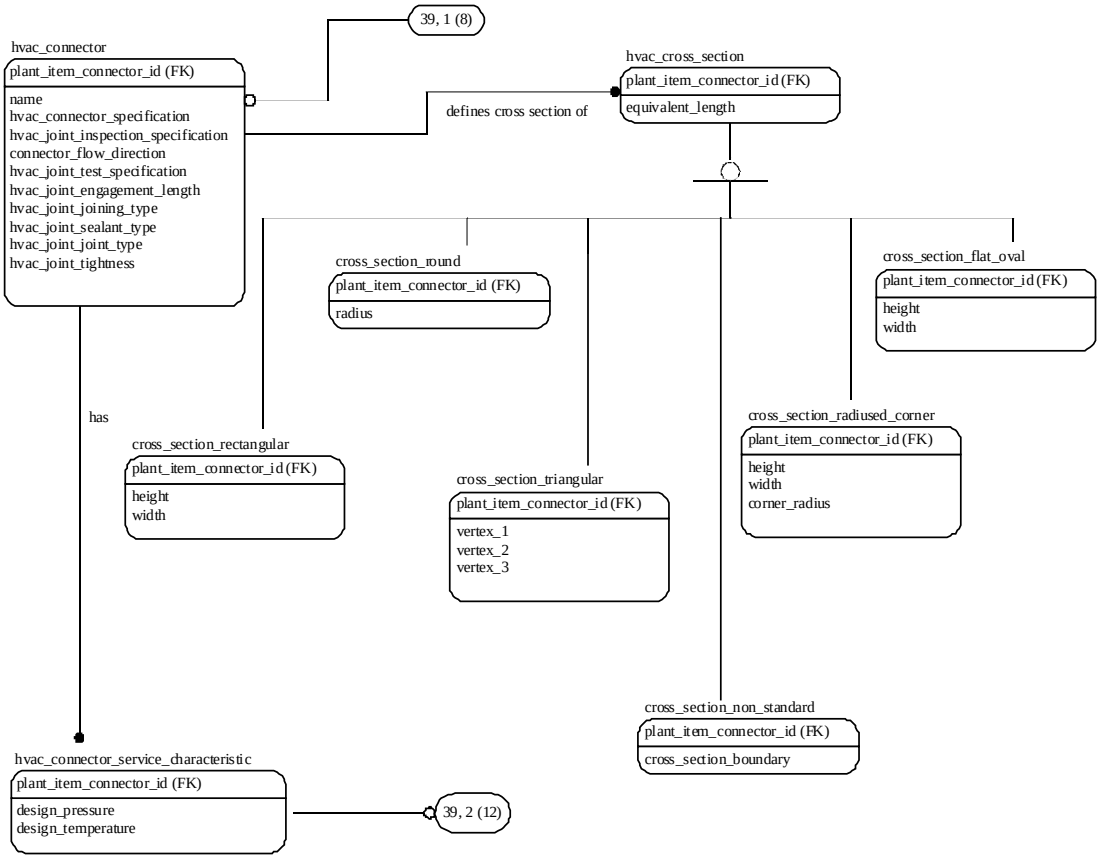

Figure G.40 - ARM diagram 39 of 42

 © ISO 2001 — All rights reserved

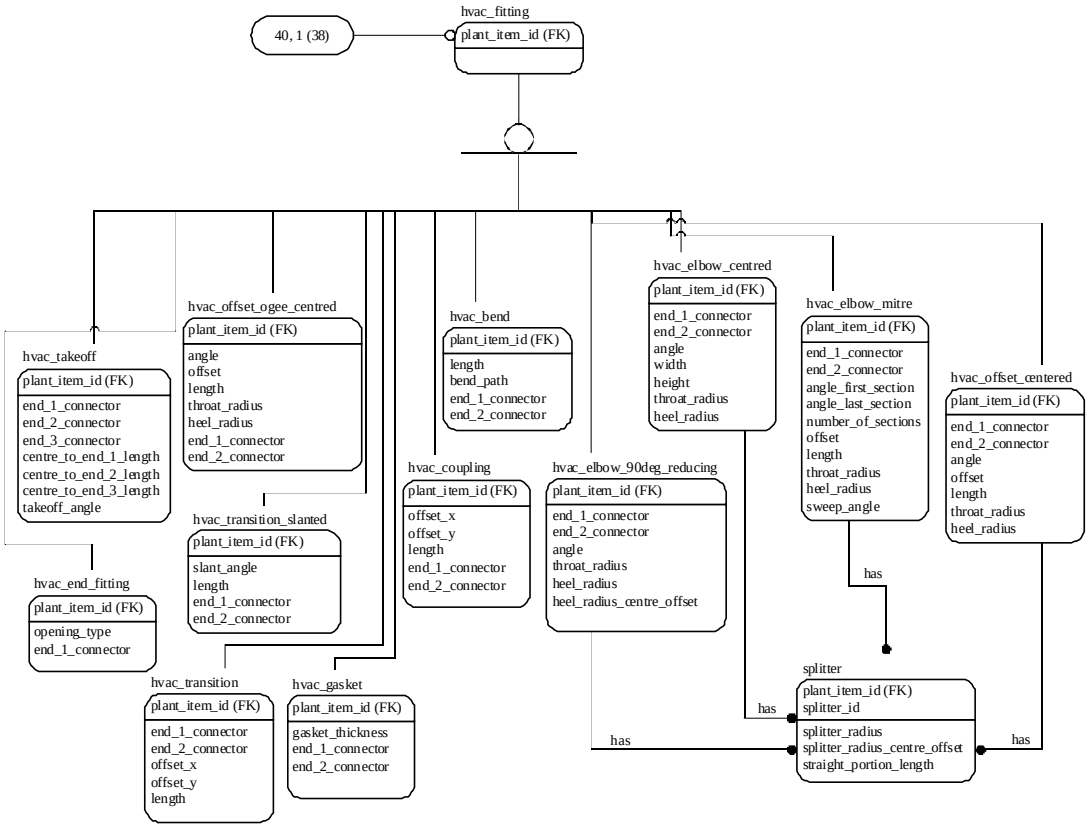

Figure G.41 - ARM diagram 40 of 42

© ISO 2001 — All rights reserved

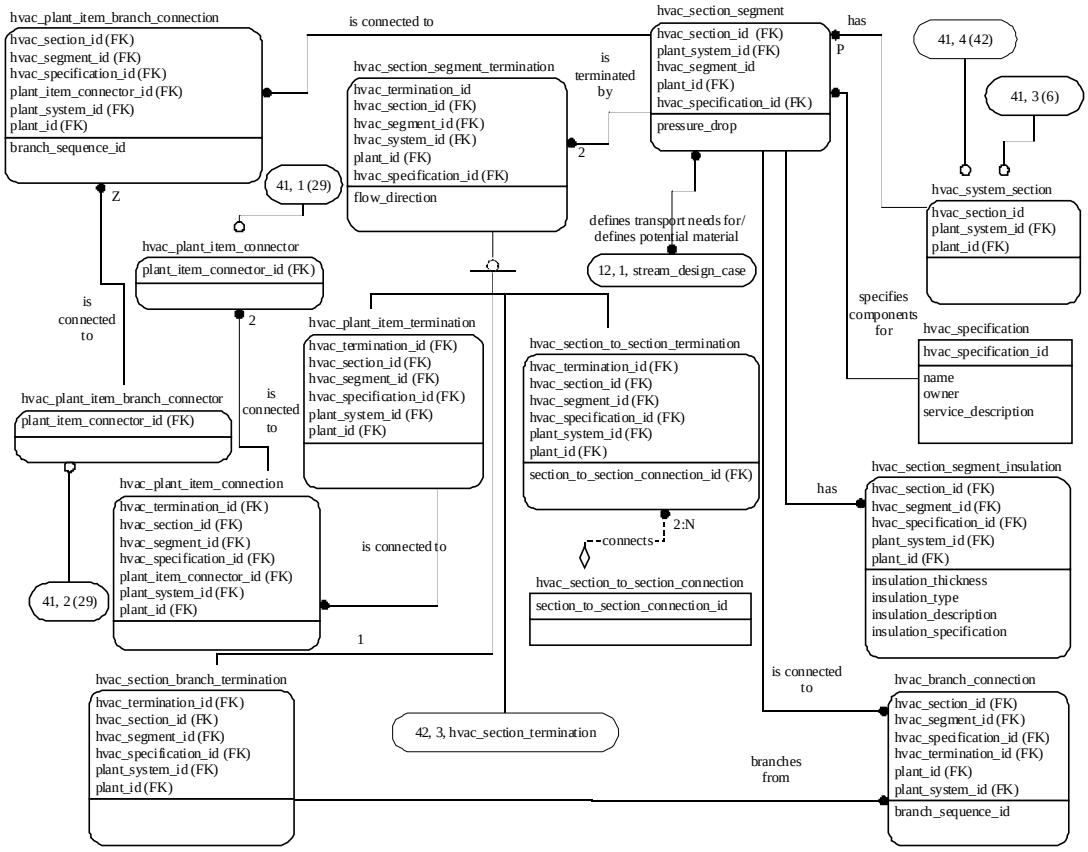

Figure G.42 - ARM diagram 41 of 42

 © ISO 2001 — All rights reserved

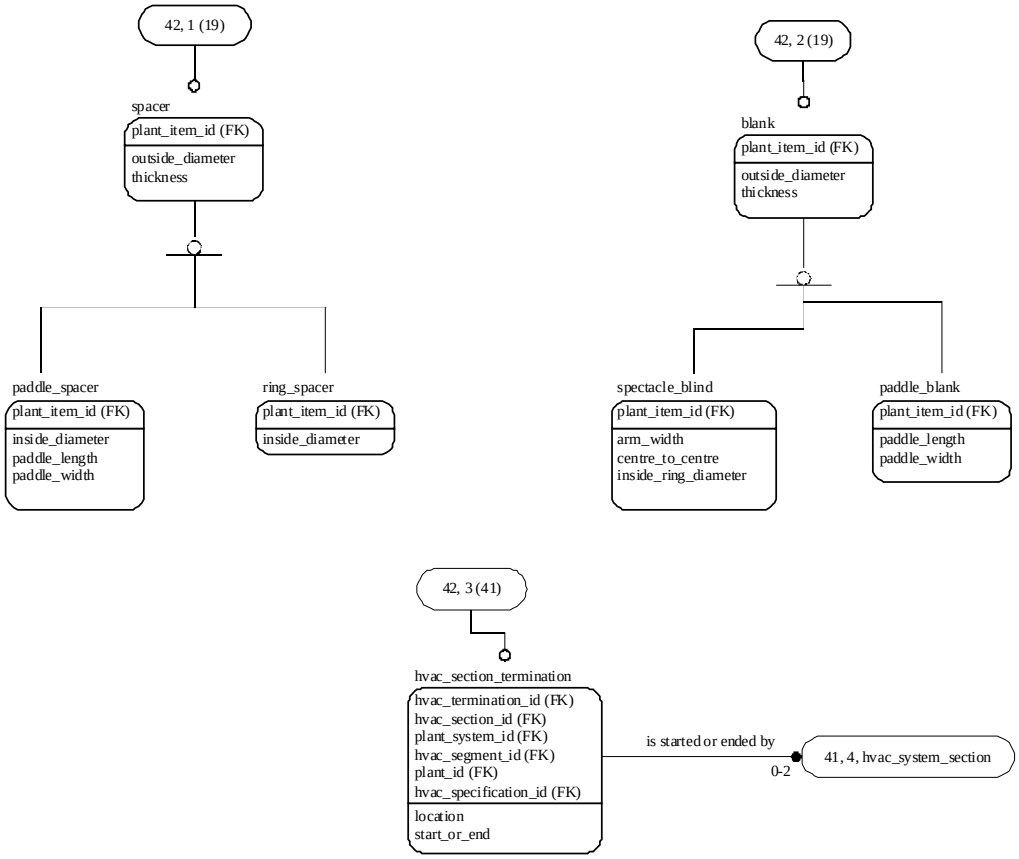

Figure G.43 - ARM diagram 42 of 42

© ISO 2001 — All rights reserved

Annex H
(informative)

AIM EXPRESS-G

Figures H.1 through H.41 correspond to the AIM EXPRESS expanded listing given in annex A. The figures use the EXPRESS-G graphical notation for the EXPRESS language. EXPRESS-G is defined in annex A of ISO 10303-11.

 © ISO 2001 — All rights reserved

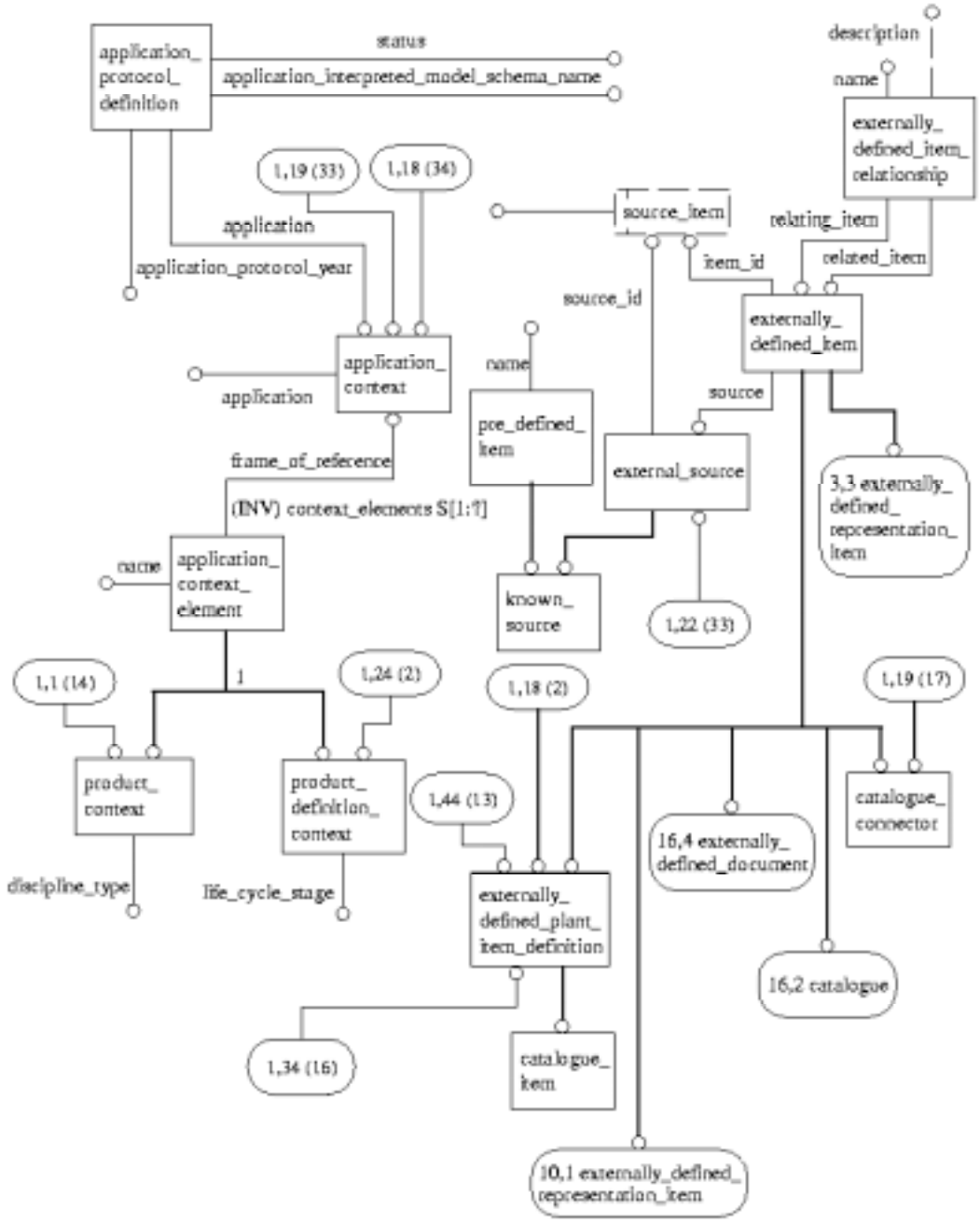

Figure H.1 - AIM EXPRESS-G diagram 1 of 41

© ISO 2001 — All rights reserved

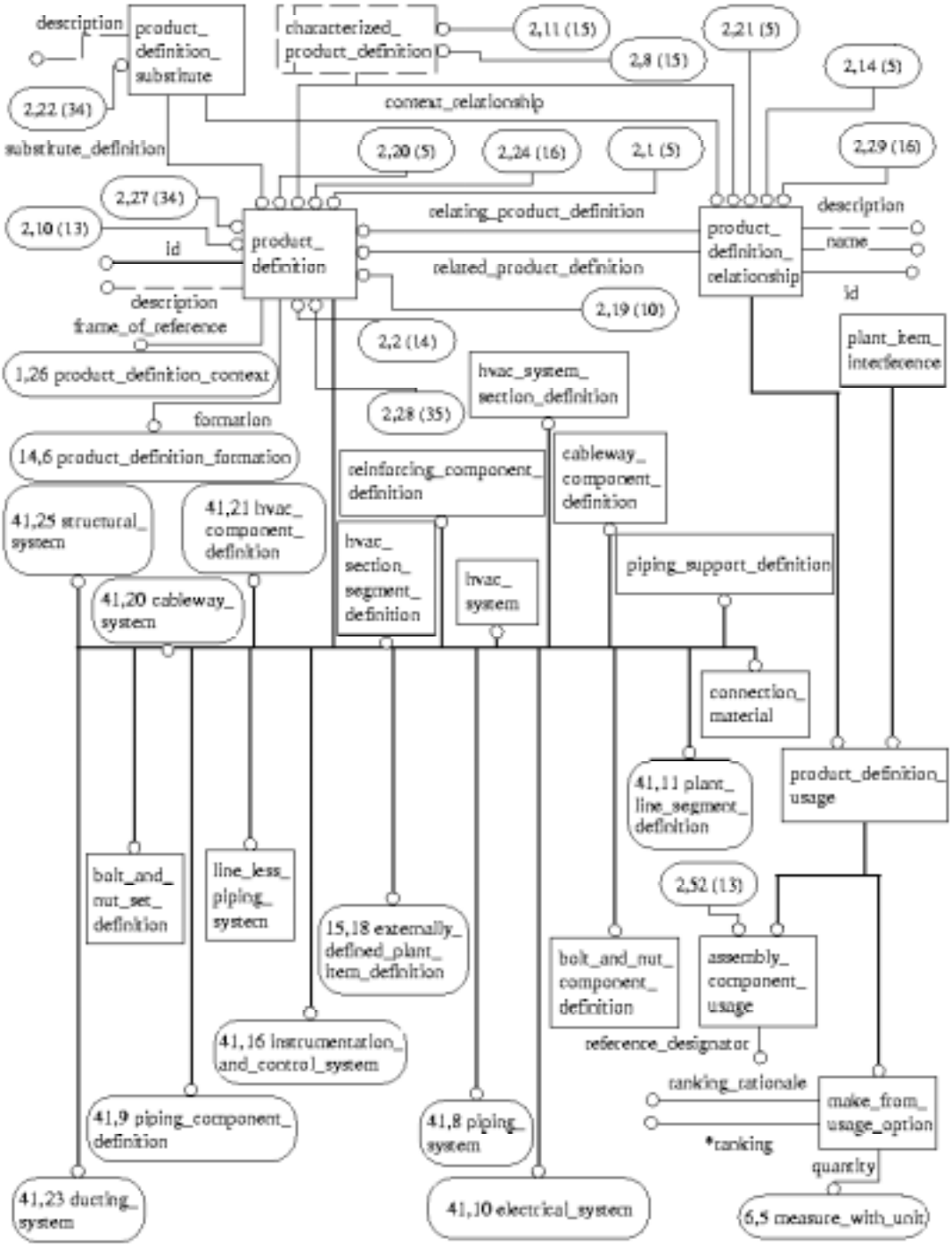

Figure H.2 - AIM EXPRESS-G diagram 2 of 41

 © ISO 2001 — All rights reserved

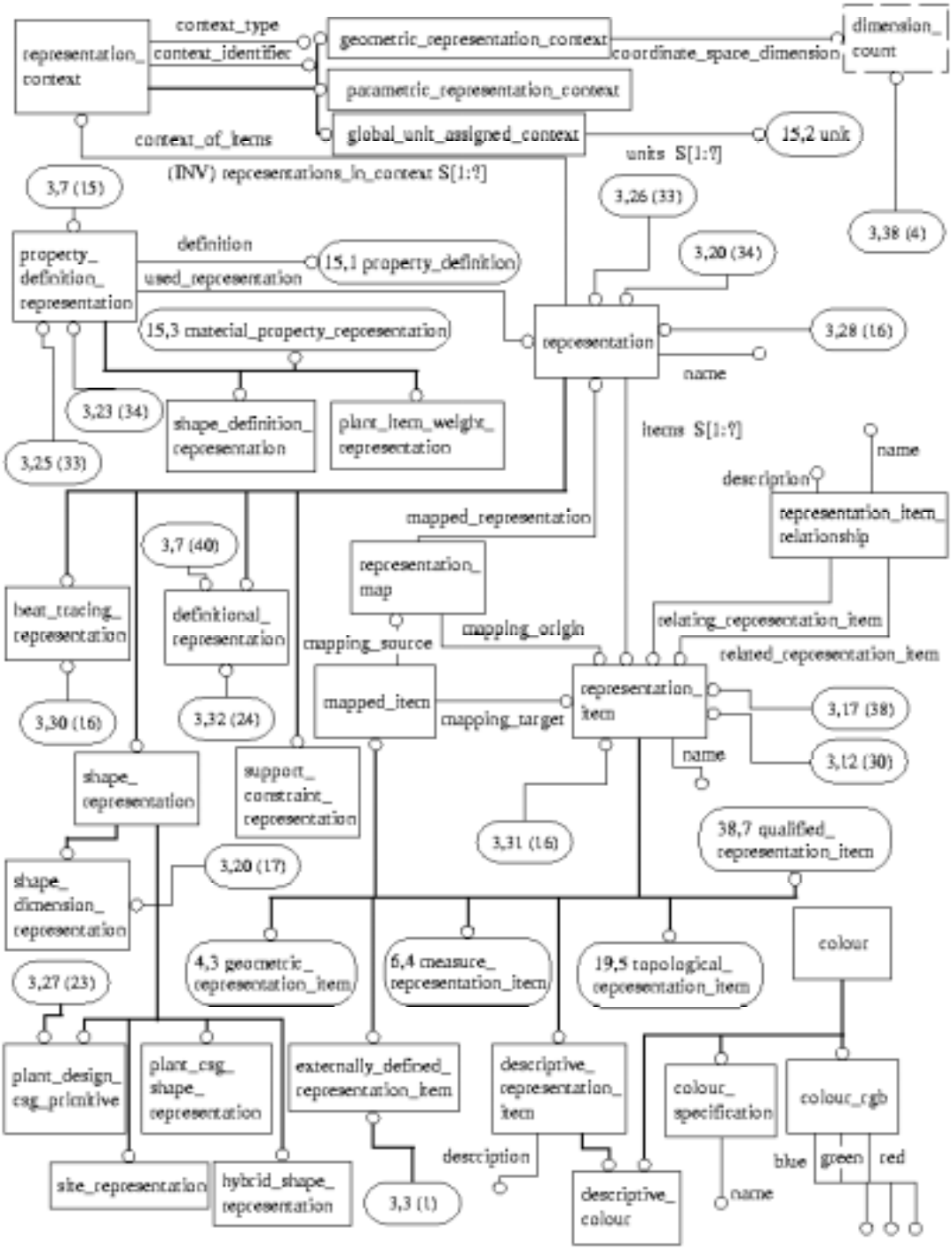

Figure H.3 - AIM EXPRESS-G diagram 3 of 41

© ISO 2001 — All rights reserved

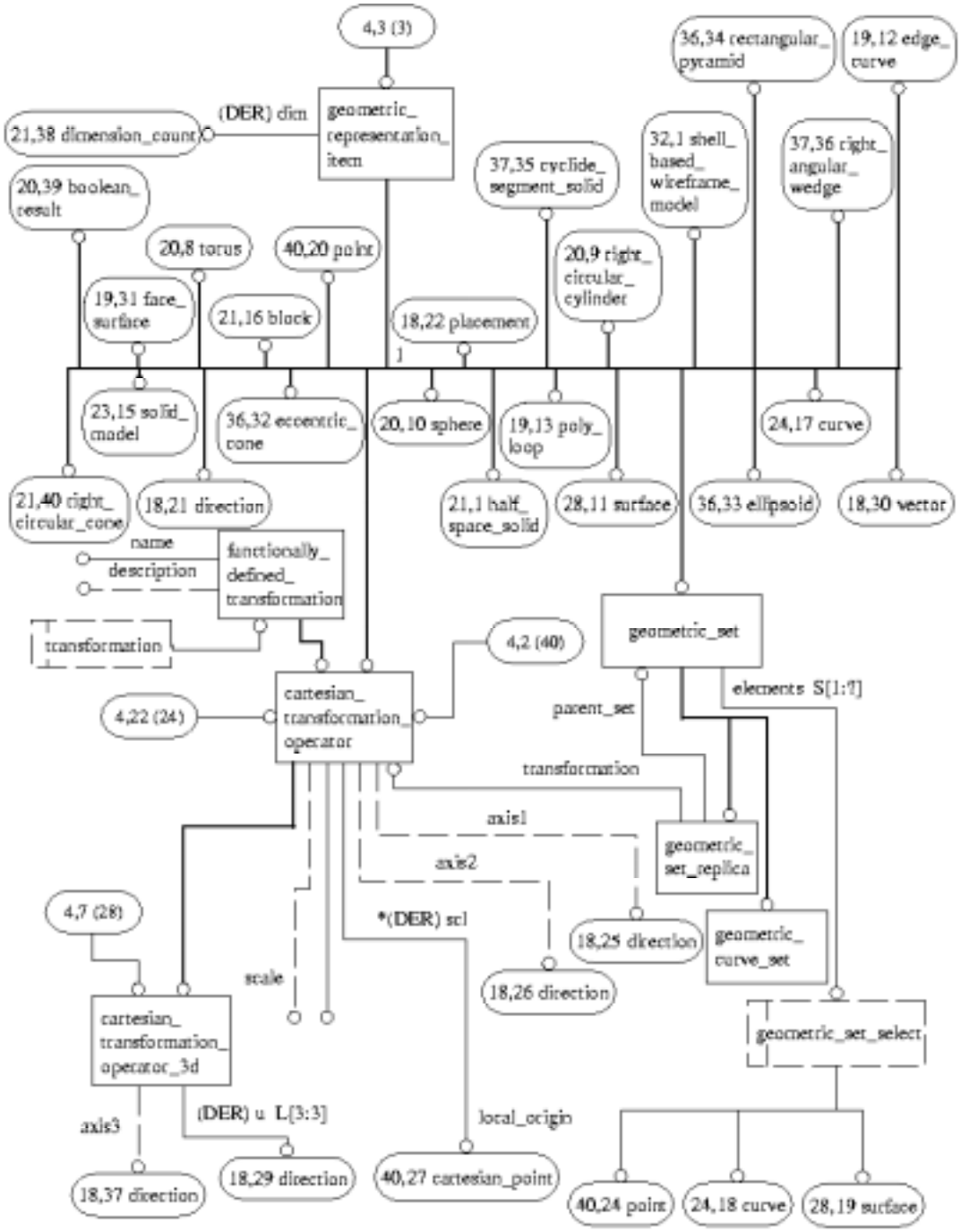

Figure H.4 - AIM EXPRESS-G diagram 4 of 41

 © ISO 2001 — All rights reserved

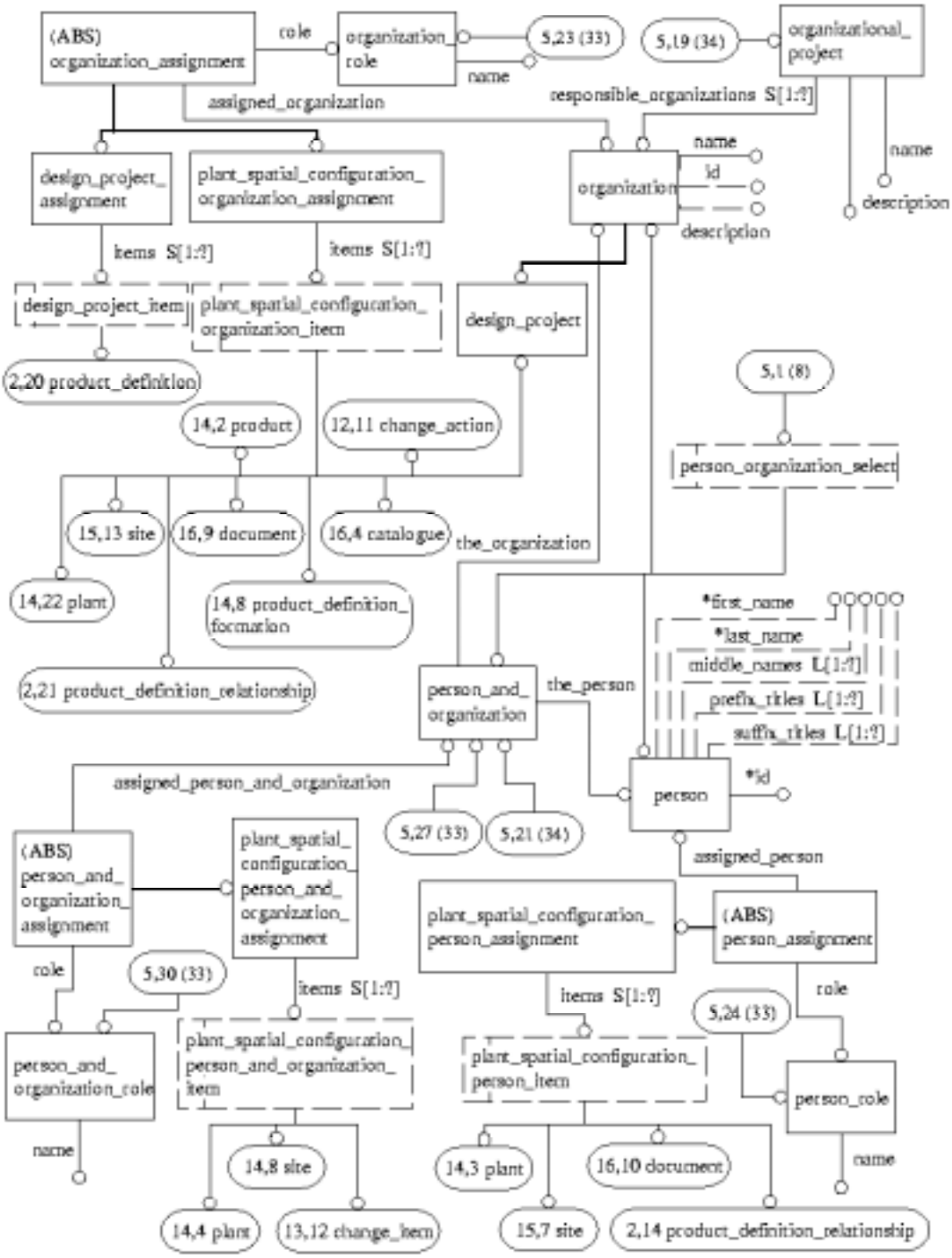

Figure H.5 - AIM EXPRESS-G diagram 5 of 41

© ISO 2001 — All rights reserved

Figure H.6 - AIM EXPRESS-G diagram 6 of 41

 © ISO 2001 — All rights reserved

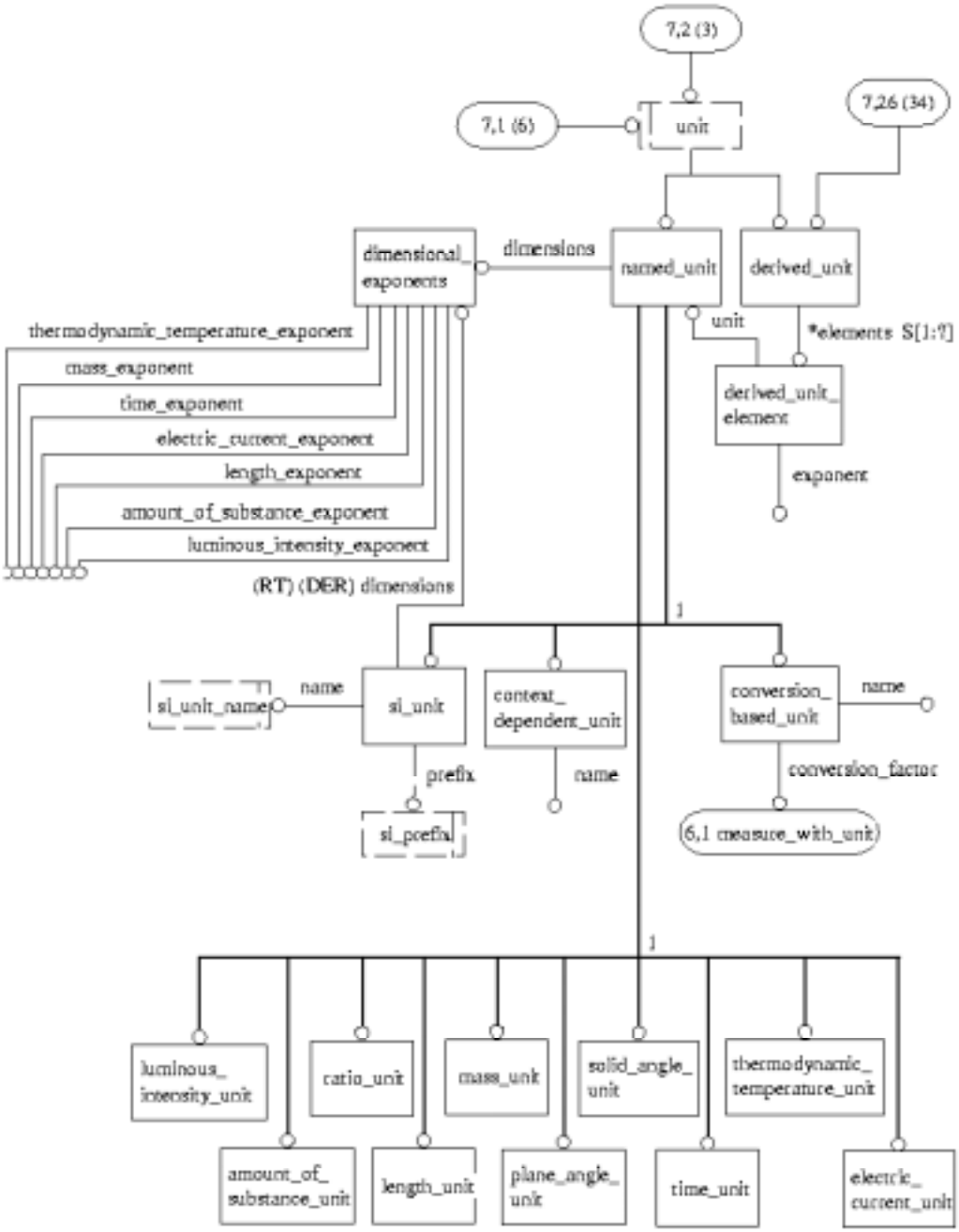

Figure H.7 - AIM EXPRESS-G diagram 7 of 41

© ISO 2001 — All rights reserved

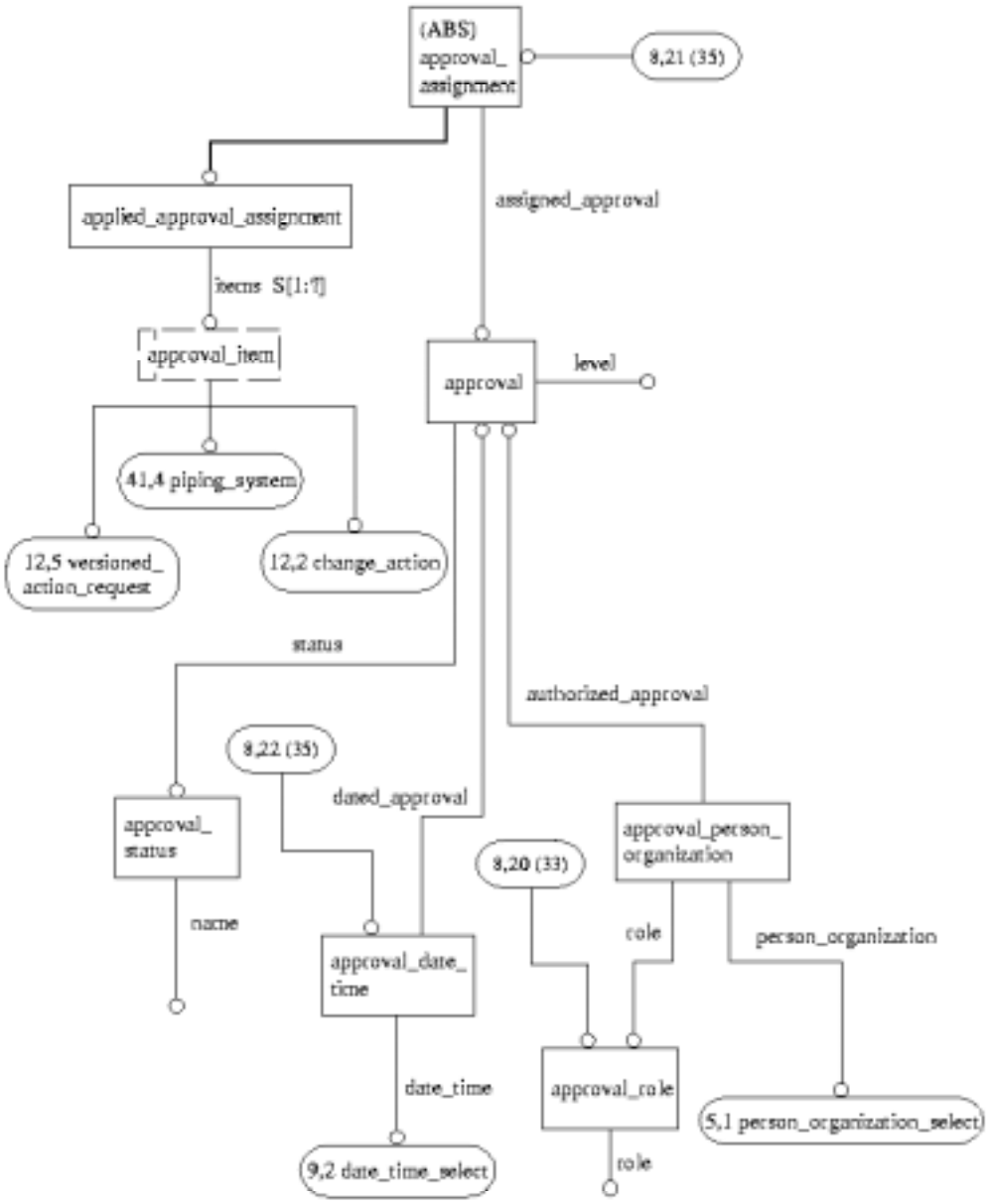

Figure H.8 - AIM EXPRESS-G diagram 8 of 41

 © ISO 2001 — All rights reserved

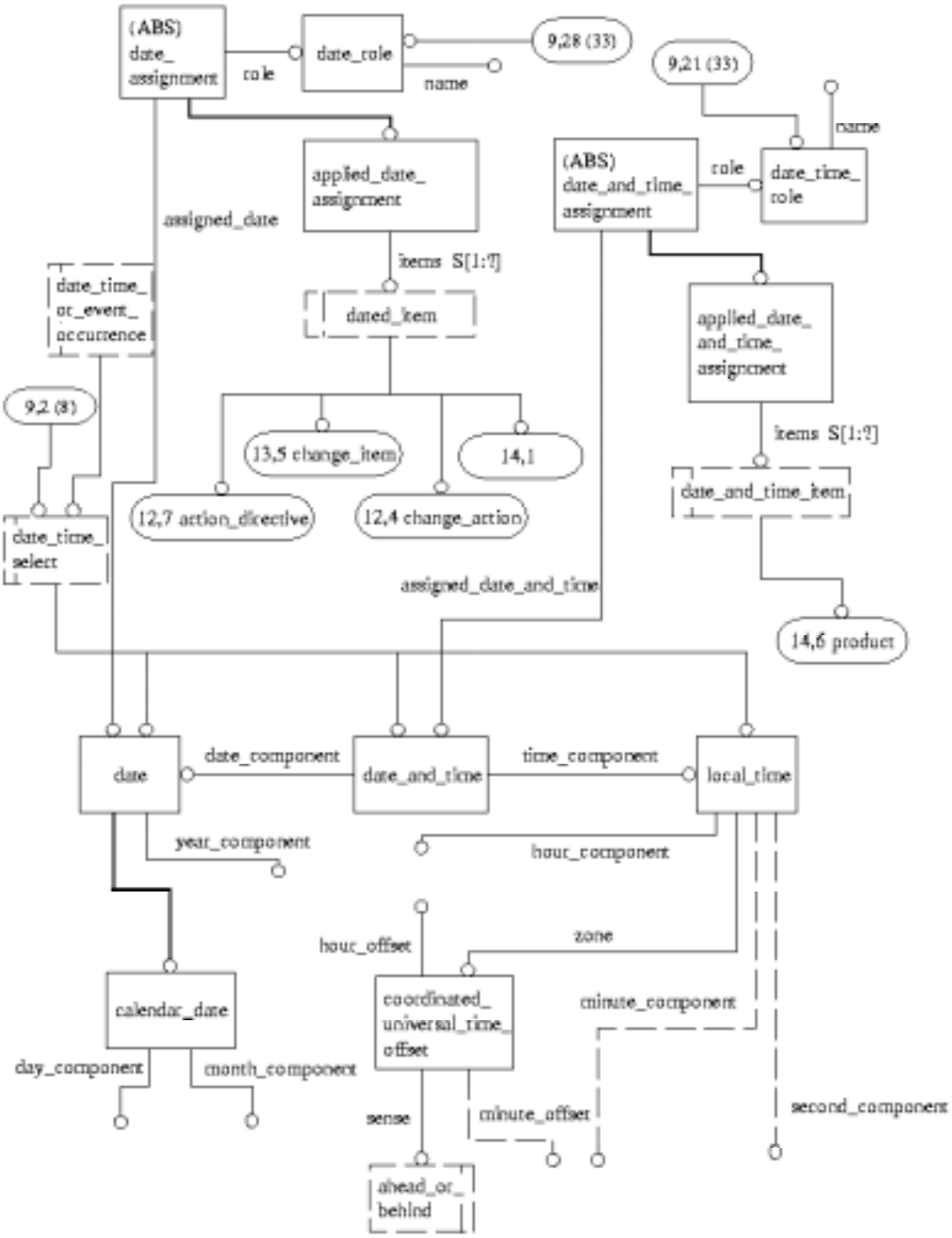

Figure H.9 - AIM EXPRESS-G diagram 9 of 41

© ISO 2001 — All rights reserved

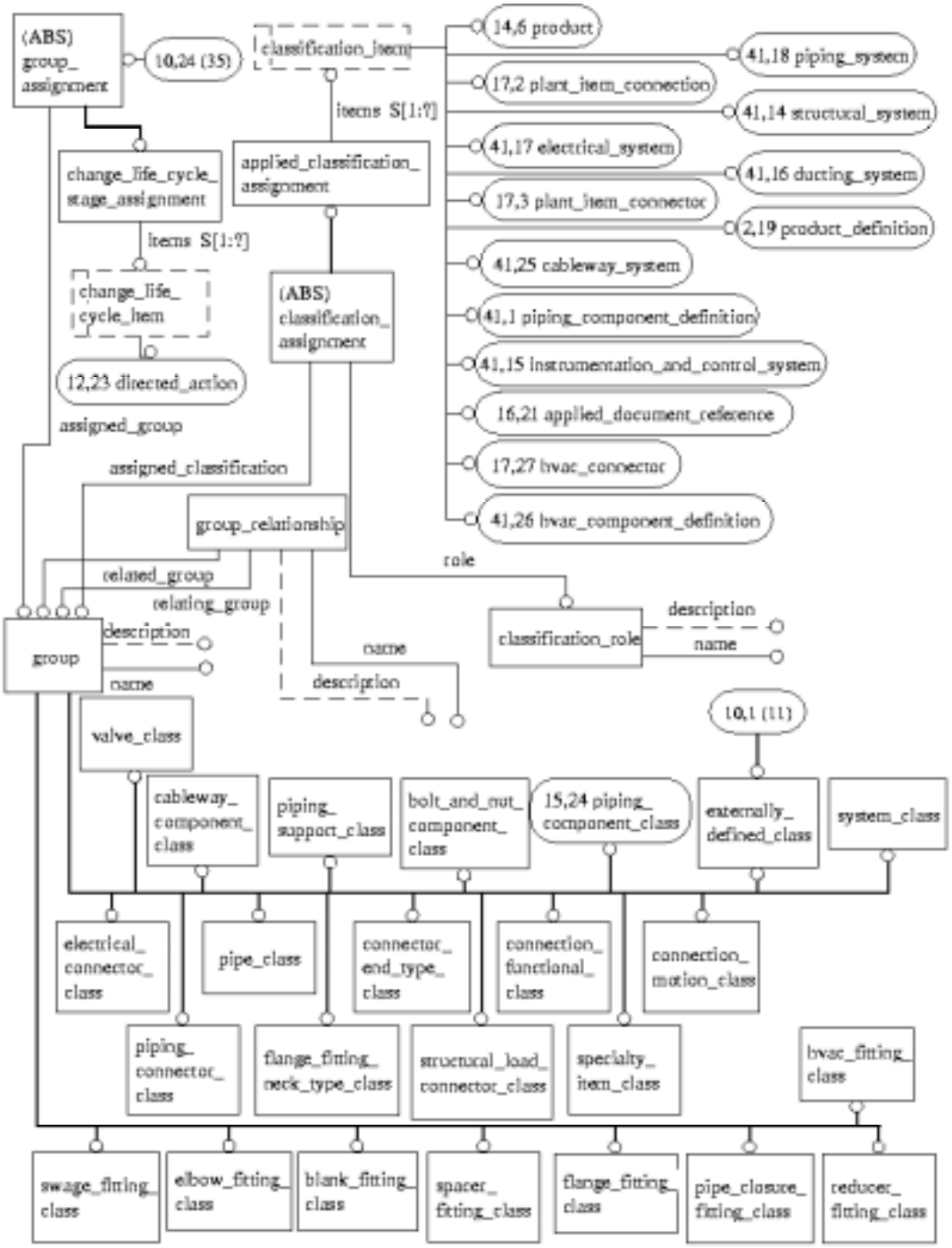

Figure H.10 - AIM EXPRESS-G diagram 10 of 41

 © ISO 2001 — All rights reserved

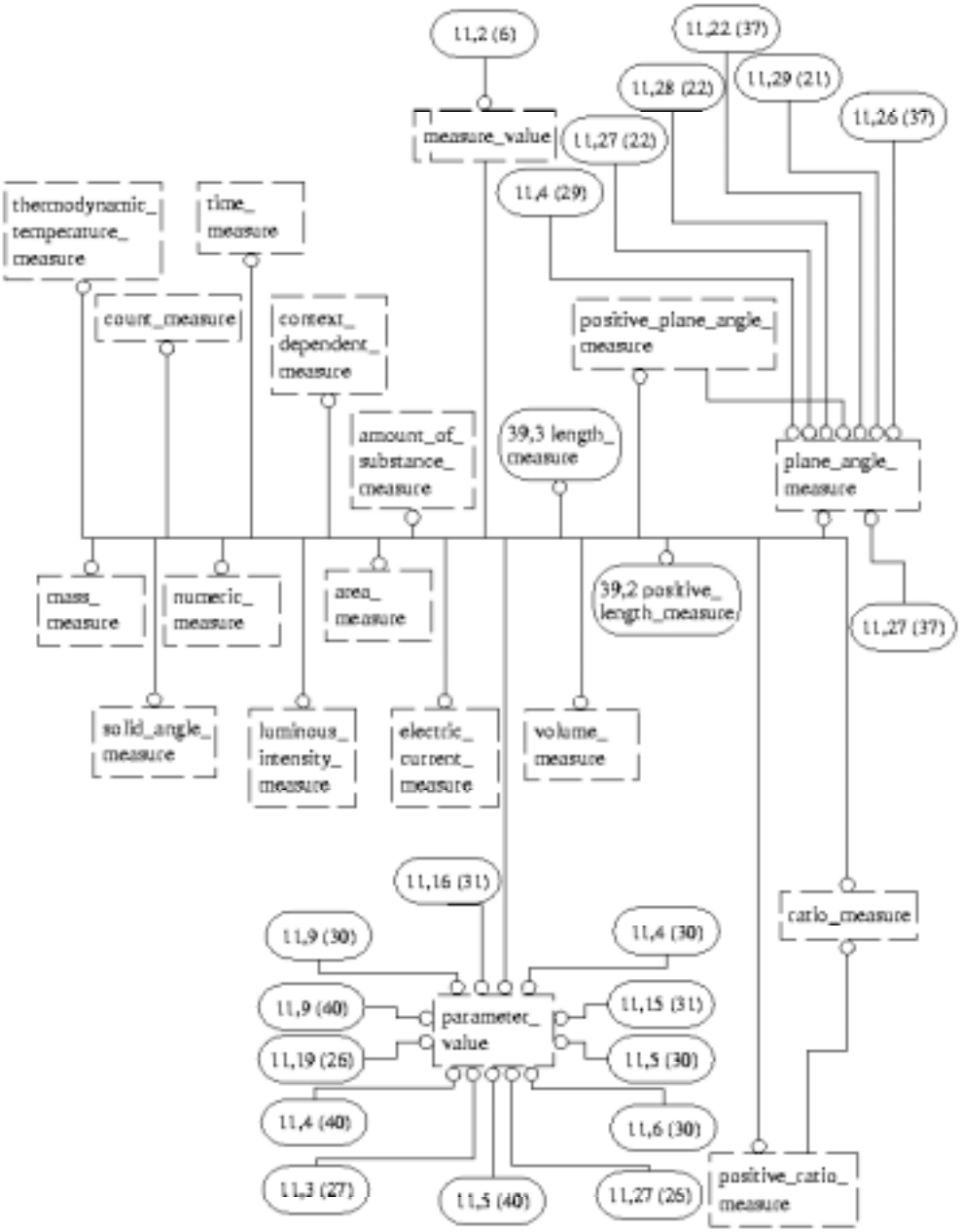

Figure H.11 - AIM EXPRESS-G diagram 11 of 41

© ISO 2001 — All rights reserved

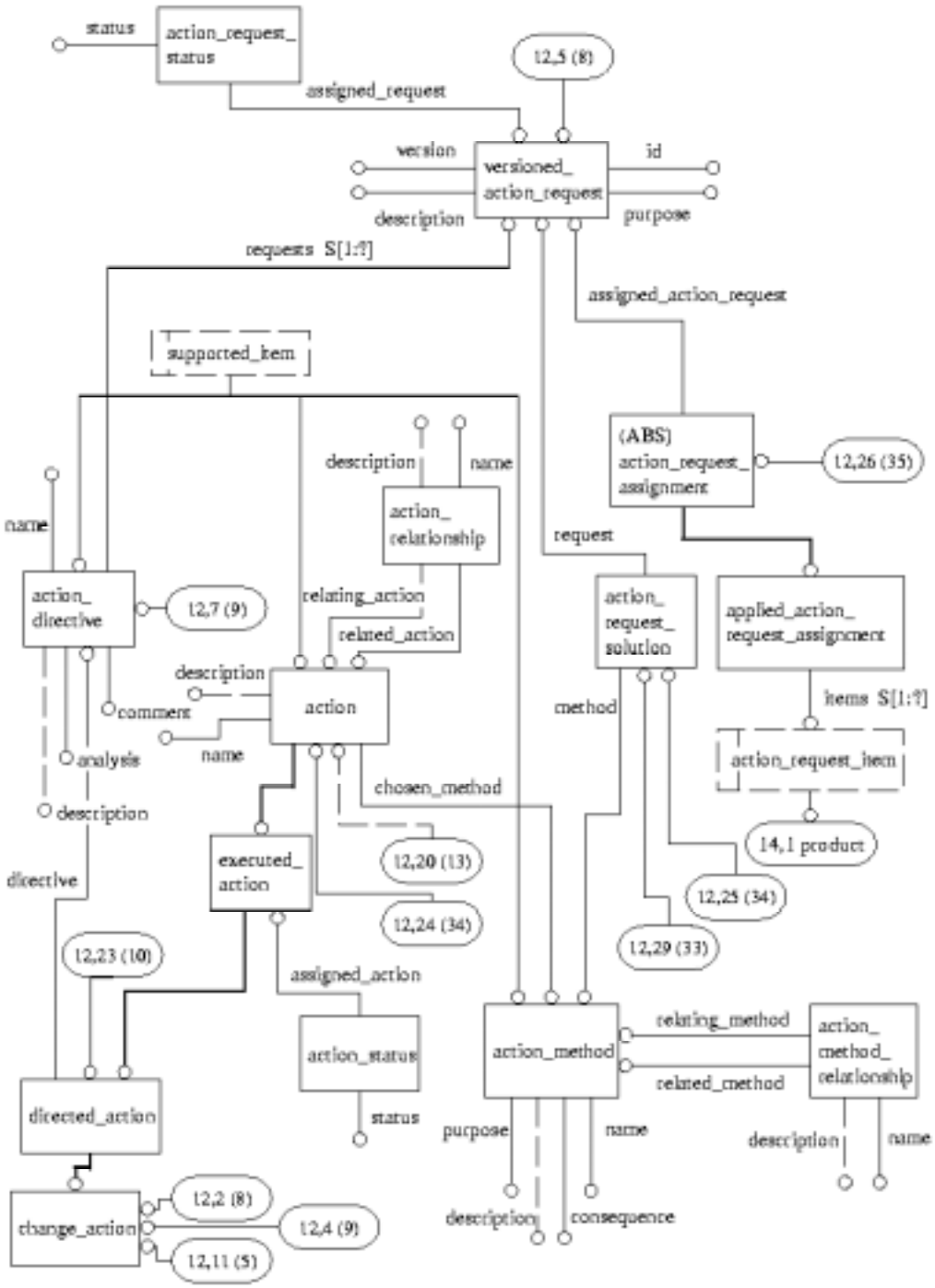

Figure H.12 - AIM EXPRESS-G diagram 12 of 41

 © ISO 2001 — All rights reserved

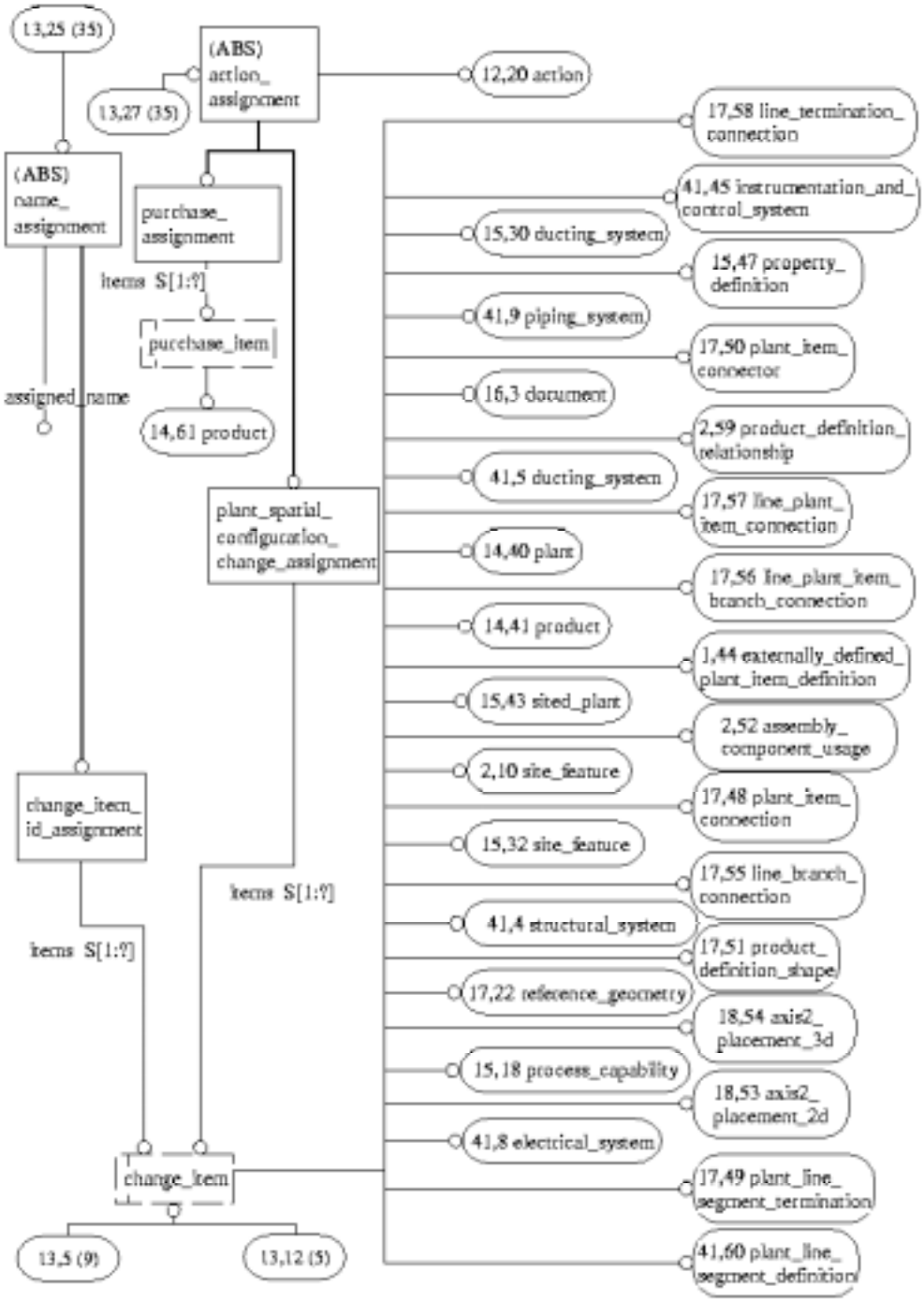

Figure H.13 - AIM EXPRESS-G diagram 13 of 41

© ISO 2001 — All rights reserved

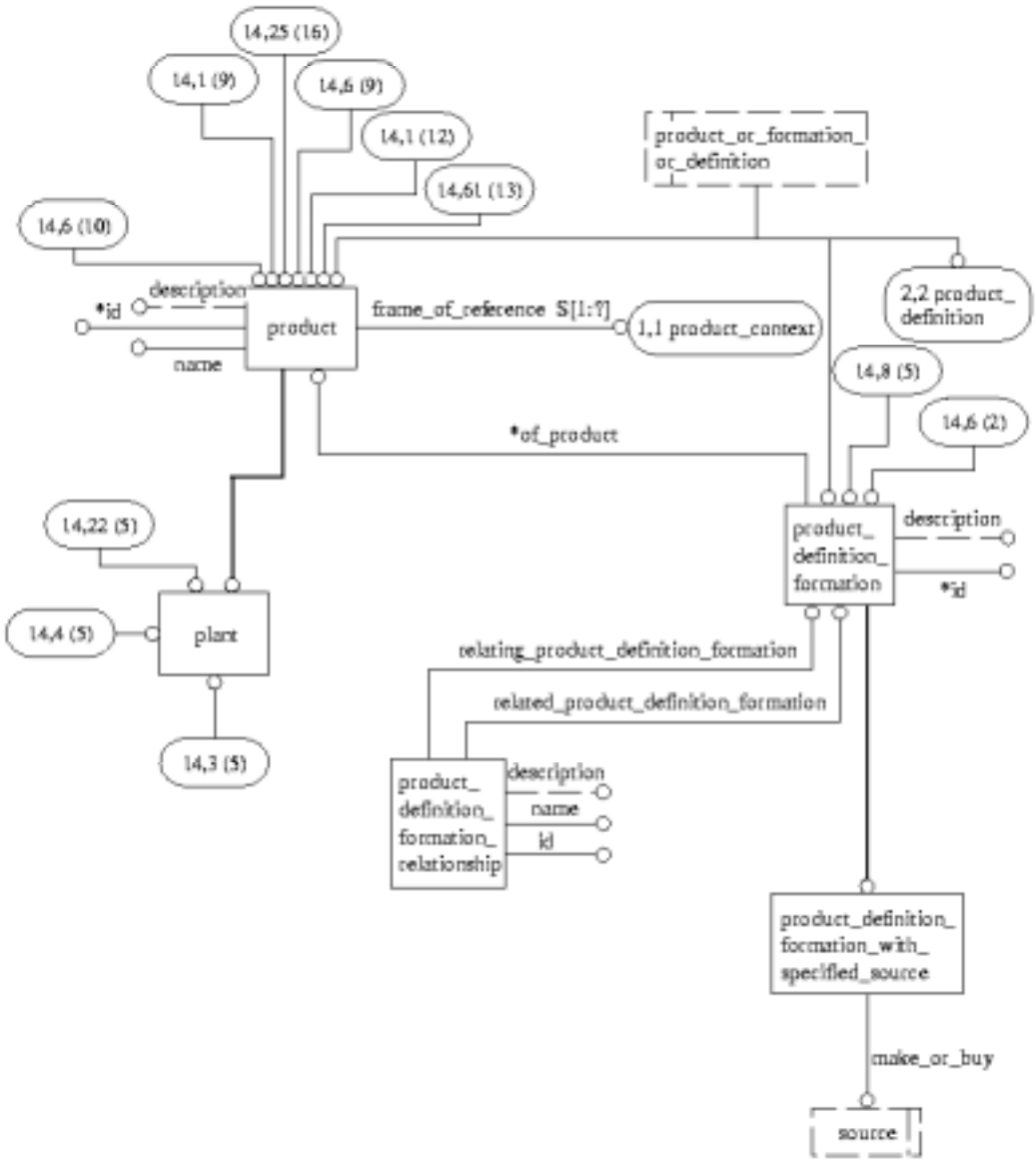

Figure H.14 - AIM EXPRESS-G diagram 14 of 41

 © ISO 2001 — All rights reserved

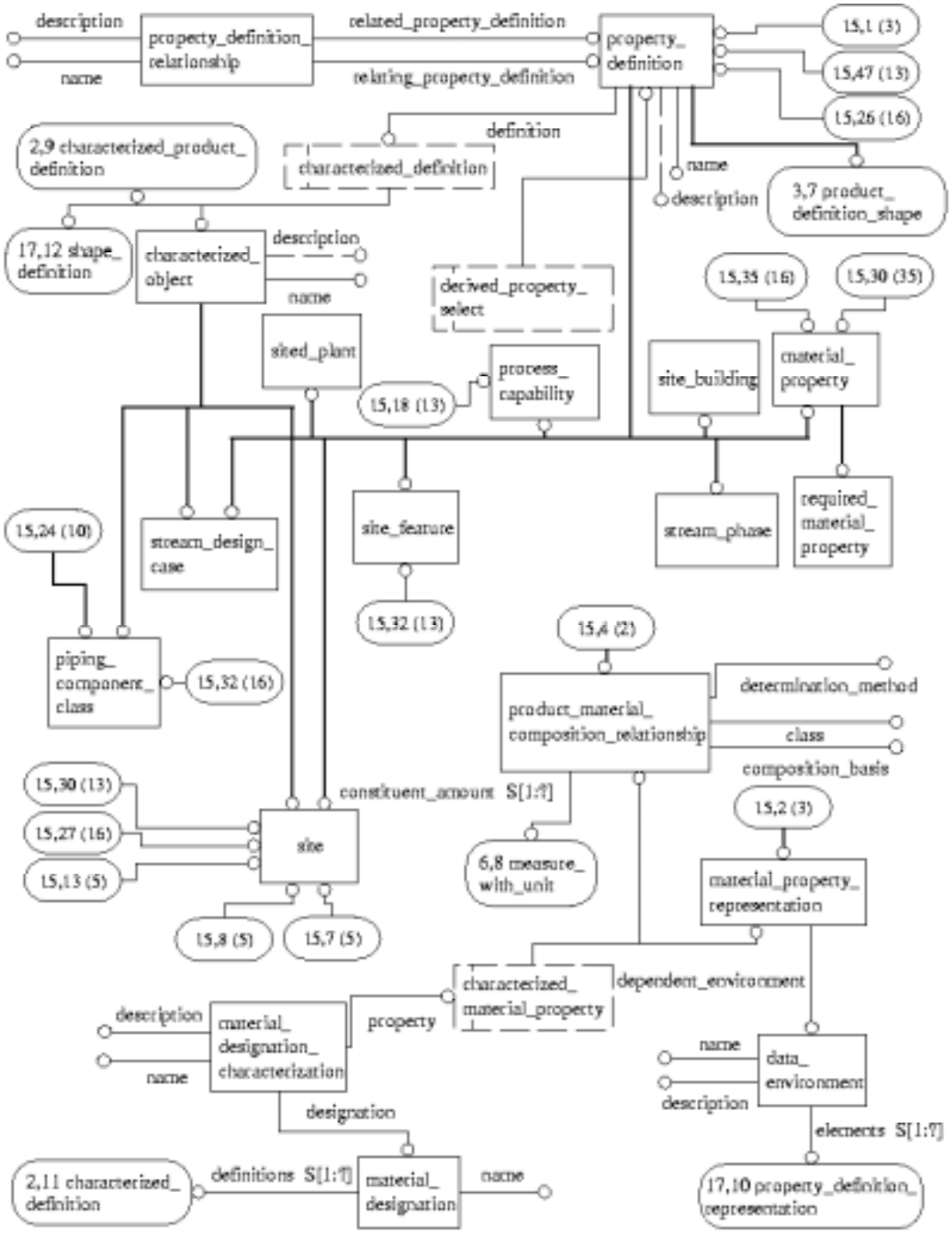

Figure H.15 - AIM EXPRESS-G diagram 15 of 41

© ISO 2001 — All rights reserved

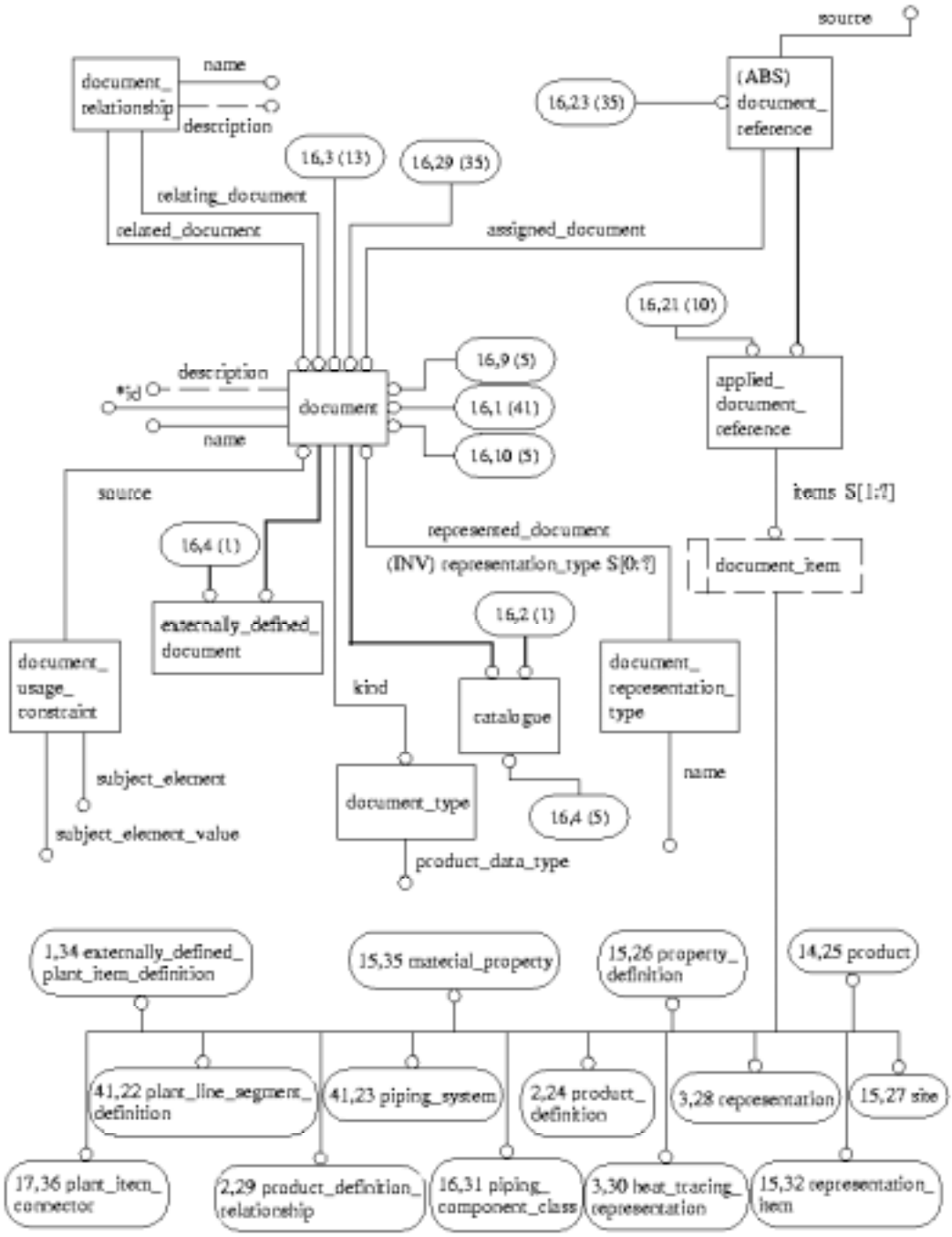

Figure H.16 - AIM EXPRESS-G diagram 16 of 41

 © ISO 2001 — All rights reserved

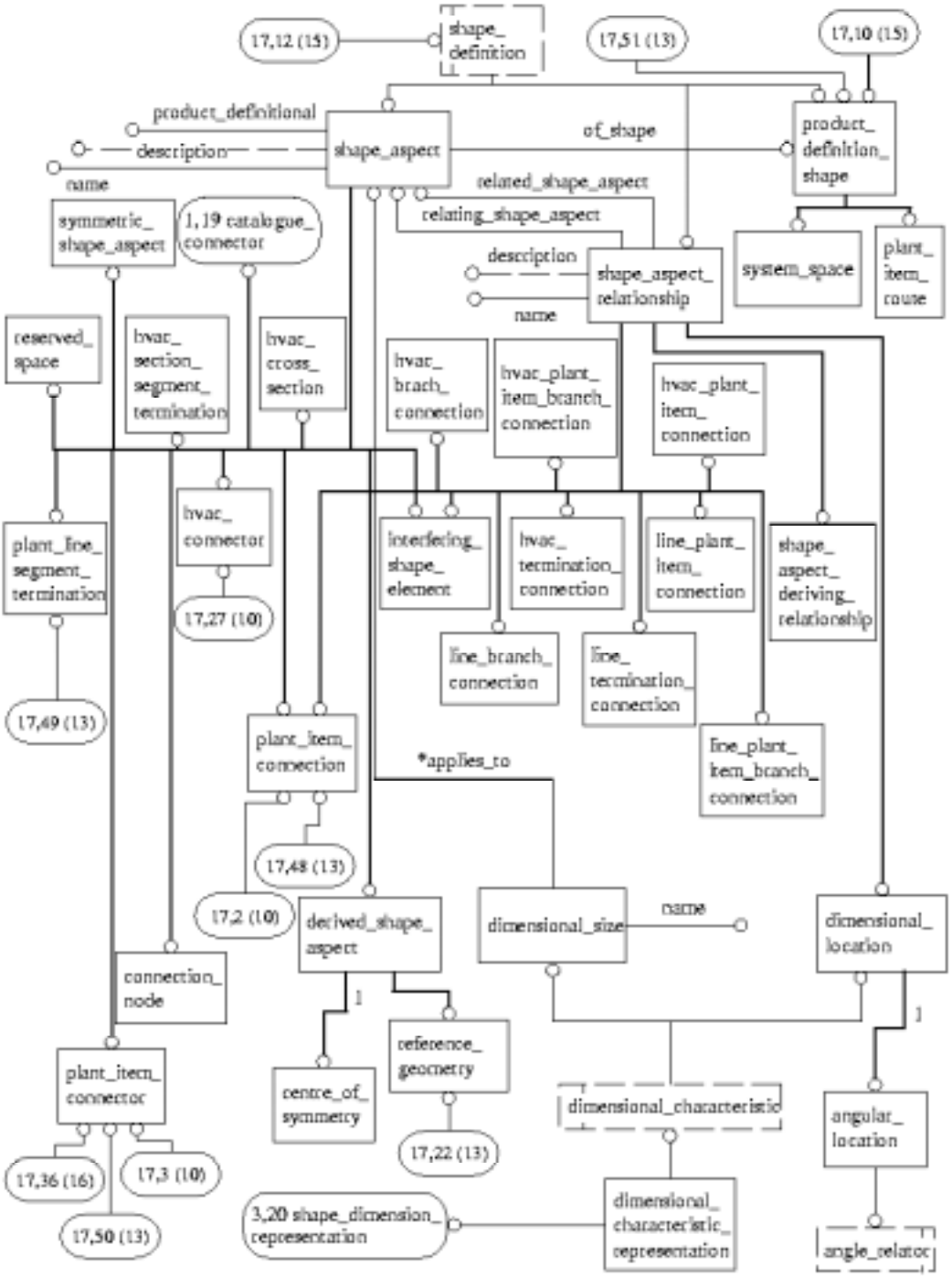

Figure H.17 - AIM EXPRESS-G diagram 17 of 41

© ISO 2001 — All rights reserved

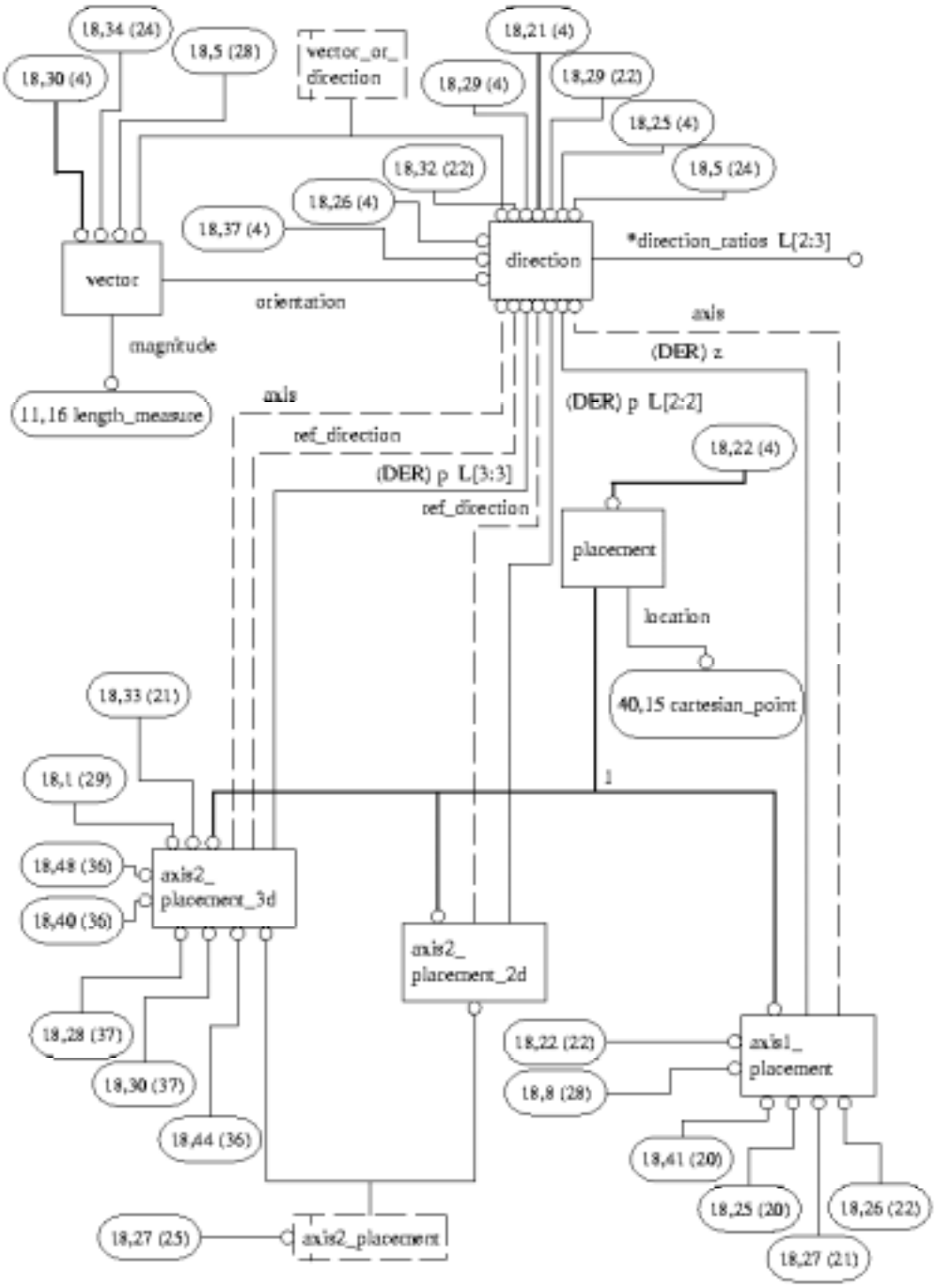

Figure H.18 - AIM EXPRESS-G diagram 18 of 41

 © ISO 2001 — All rights reserved

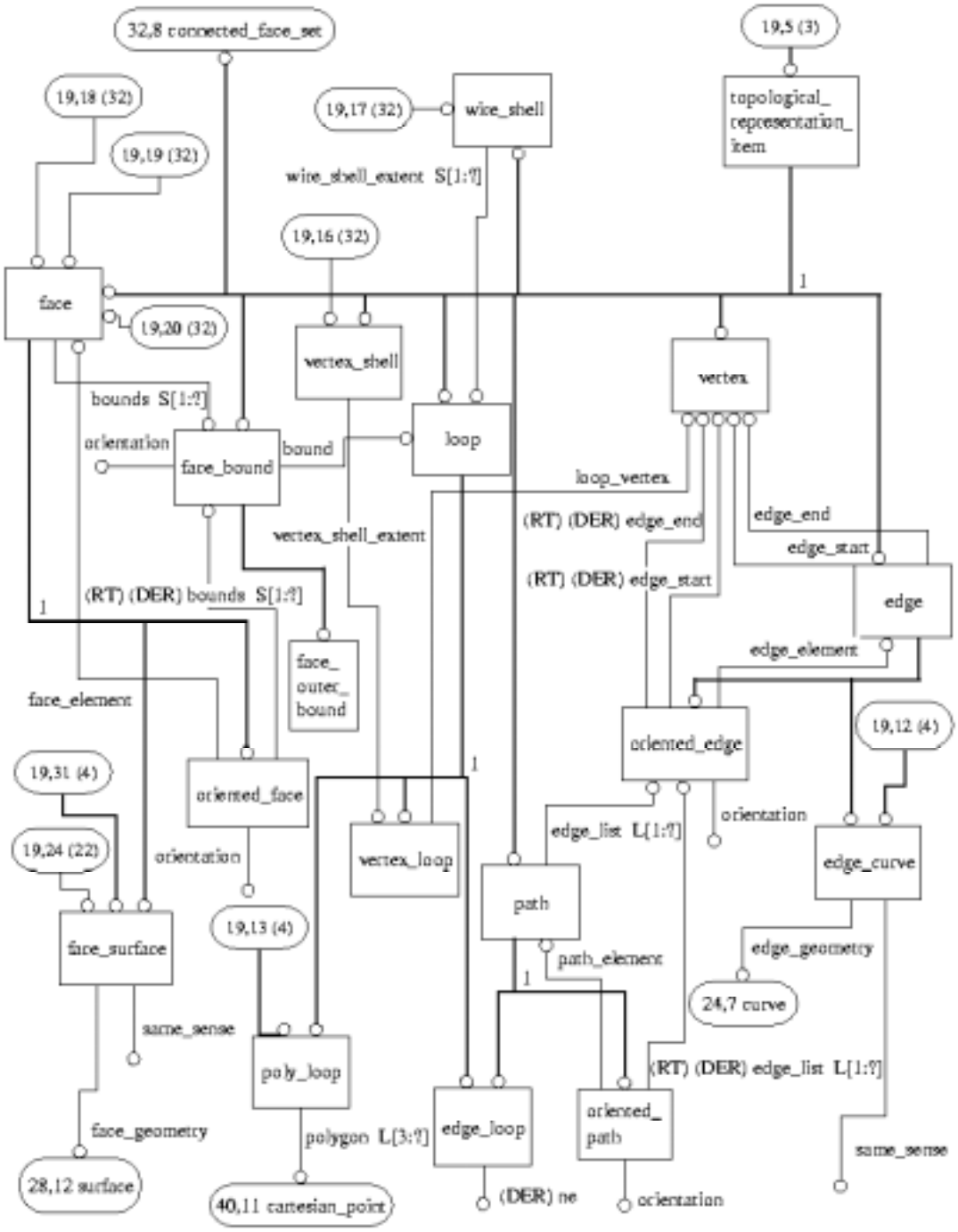

Figure H.19 - AIM EXPRESS-G diagram 19 of 41

© ISO 2001 — All rights reserved

Figure H.20 - AIM EXPRESS-G diagram 20 of 41

 © ISO 2001 — All rights reserved

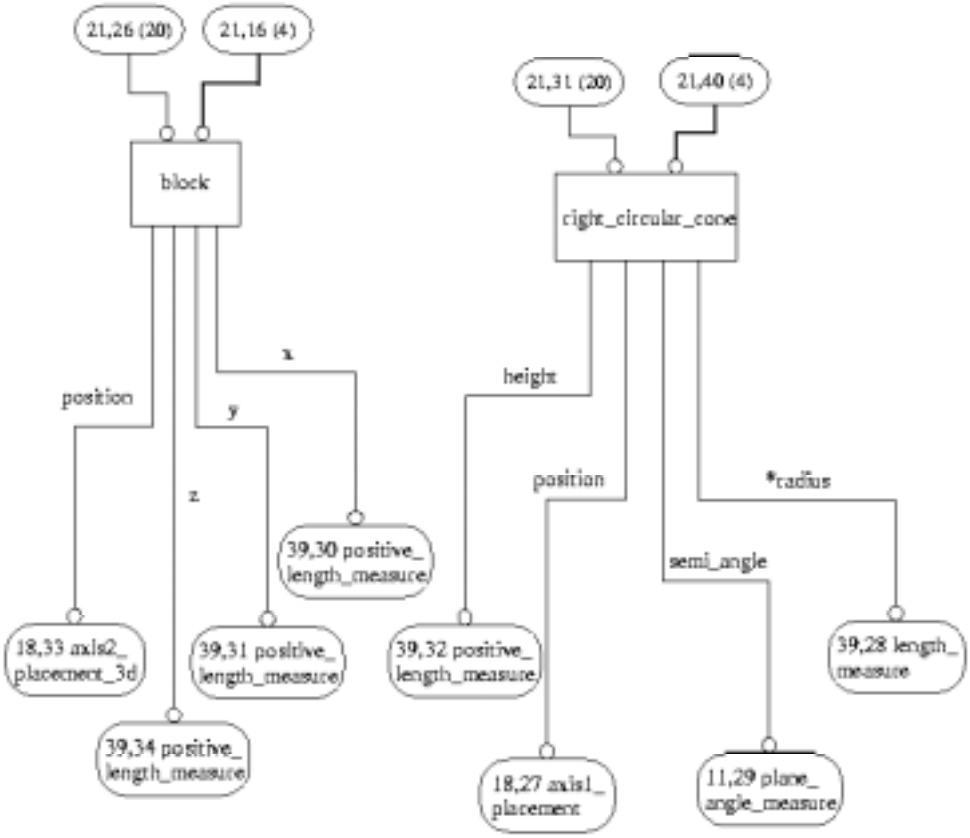

Figure H.21 - AIM EXPRESS-G diagram 21 of 41

© ISO 2001 — All rights reserved

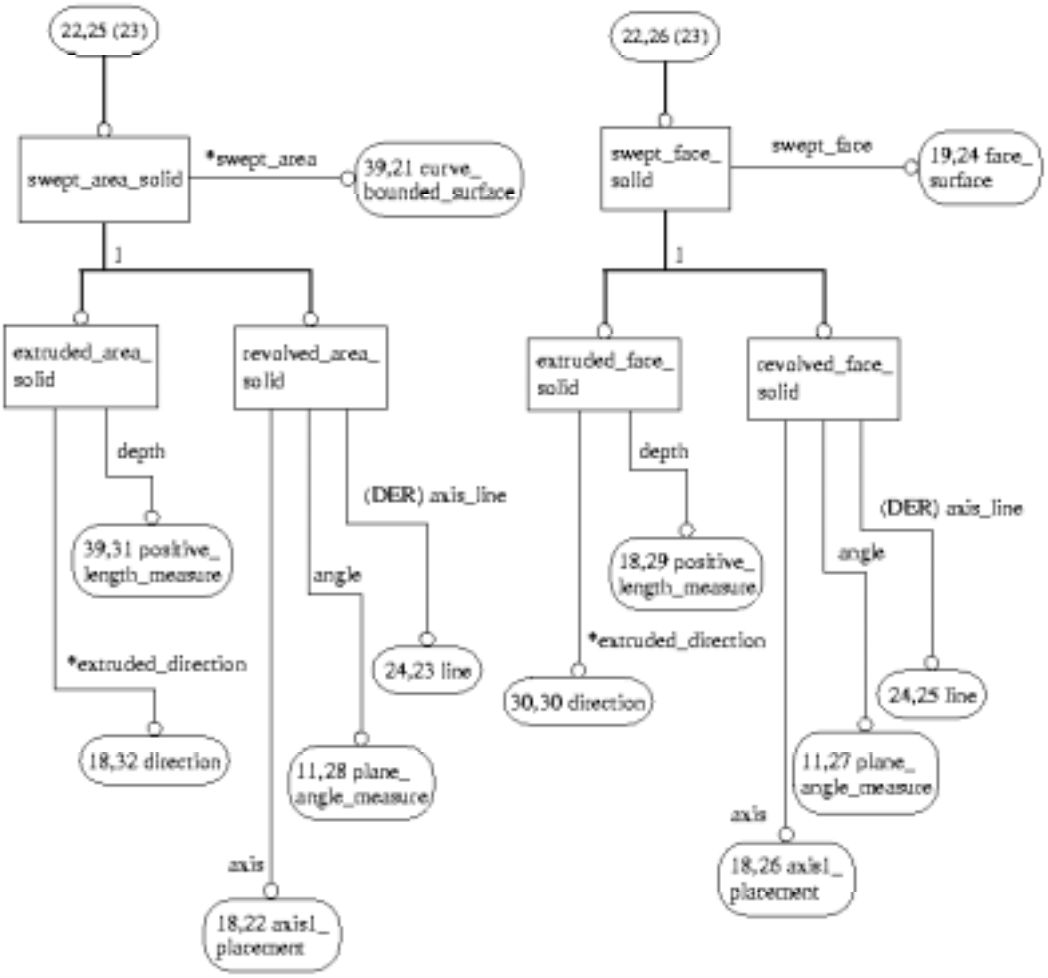

Figure H.22 - AIM EXPRESS-G diagram 22 of 41

 © ISO 2001 — All rights reserved

Figure H.23 - AIM EXPRESS-G diagram 23 of 41

© ISO 2001 — All rights reserved

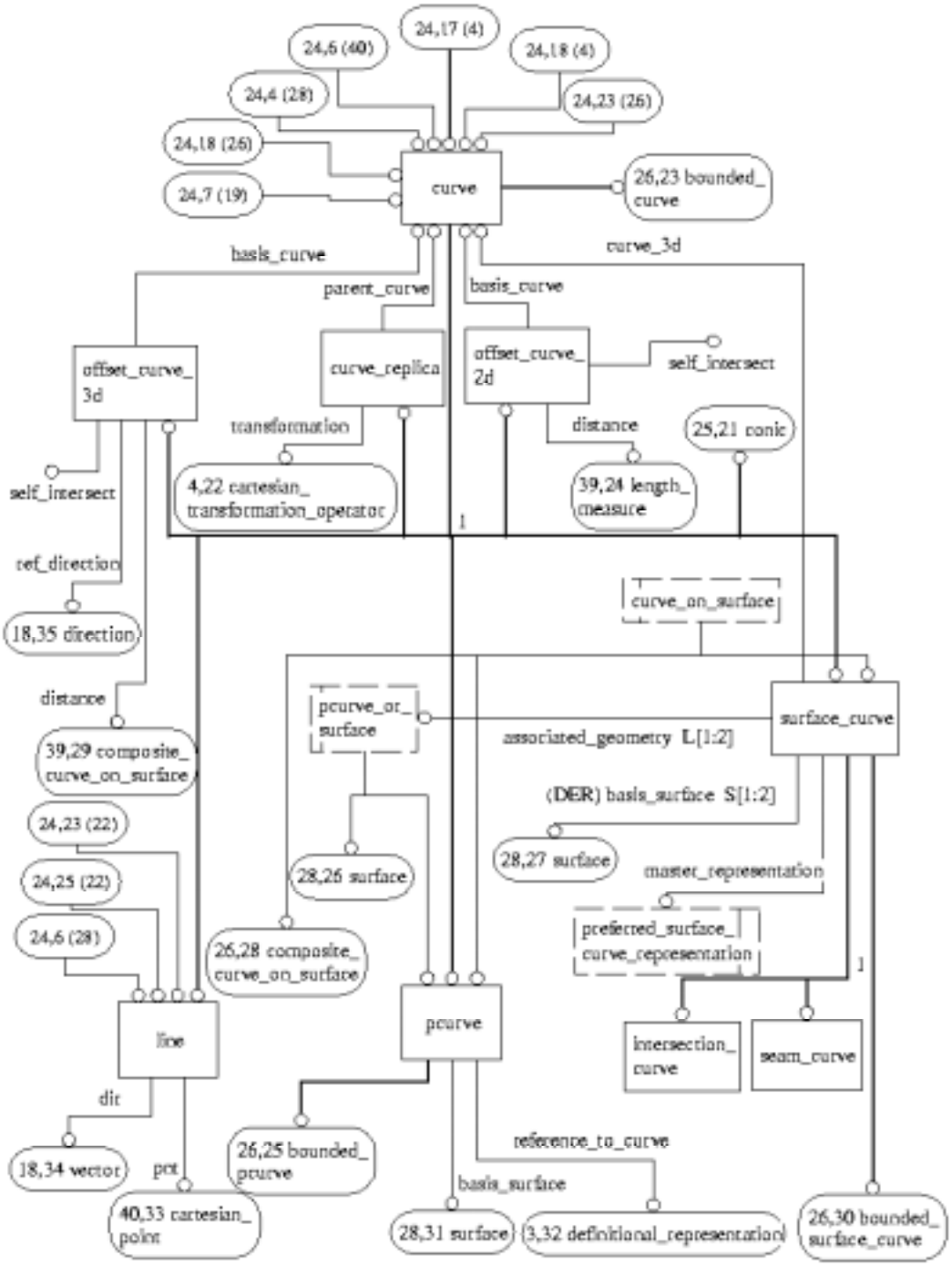

Figure H.24 - AIM EXPRESS-G diagram 24 of 41

 © ISO 2001 — All rights reserved

Figure H.25 - AIM EXPRESS-G diagram 25 of 41

© ISO 2001 — All rights reserved

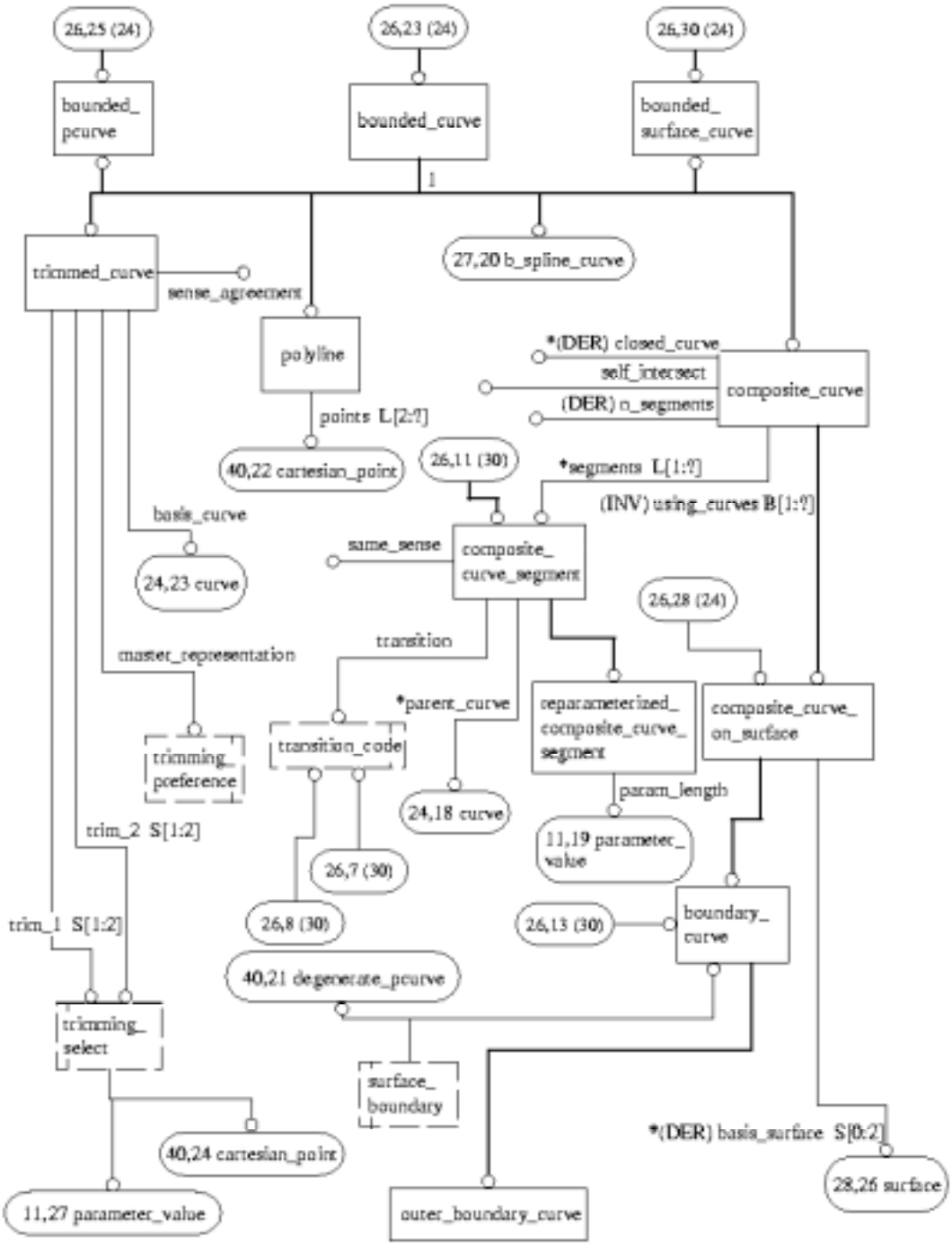

Figure H.26 - AIM EXPRESS-G diagram 26 of 41

 © ISO 2001 — All rights reserved

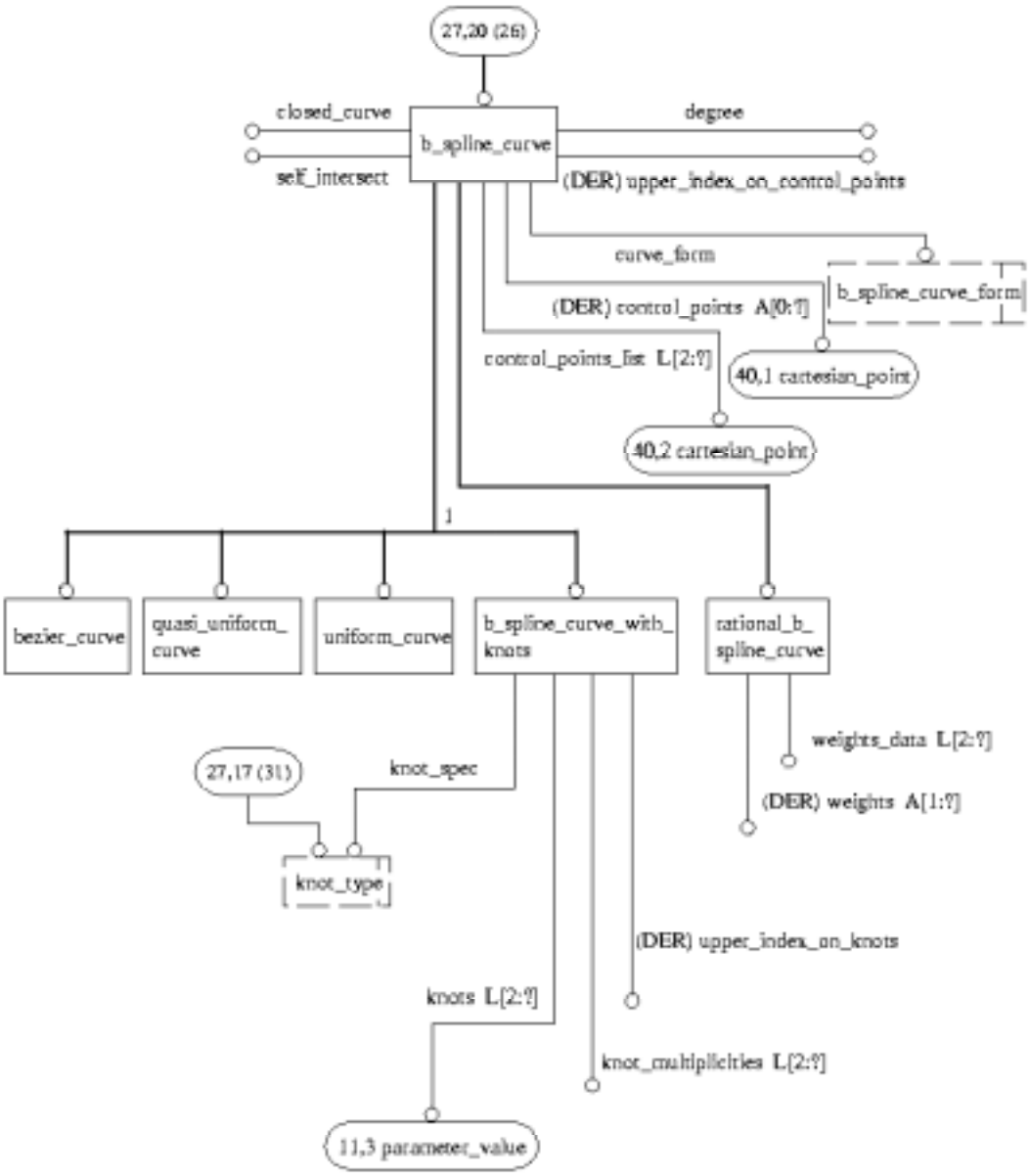

Figure H.27 - AIM EXPRESS-G diagram 27 of 41

© ISO 2001 — All rights reserved

Figure H.28 - AIM EXPRESS-G diagram 28 of 41

 © ISO 2001 — All rights reserved

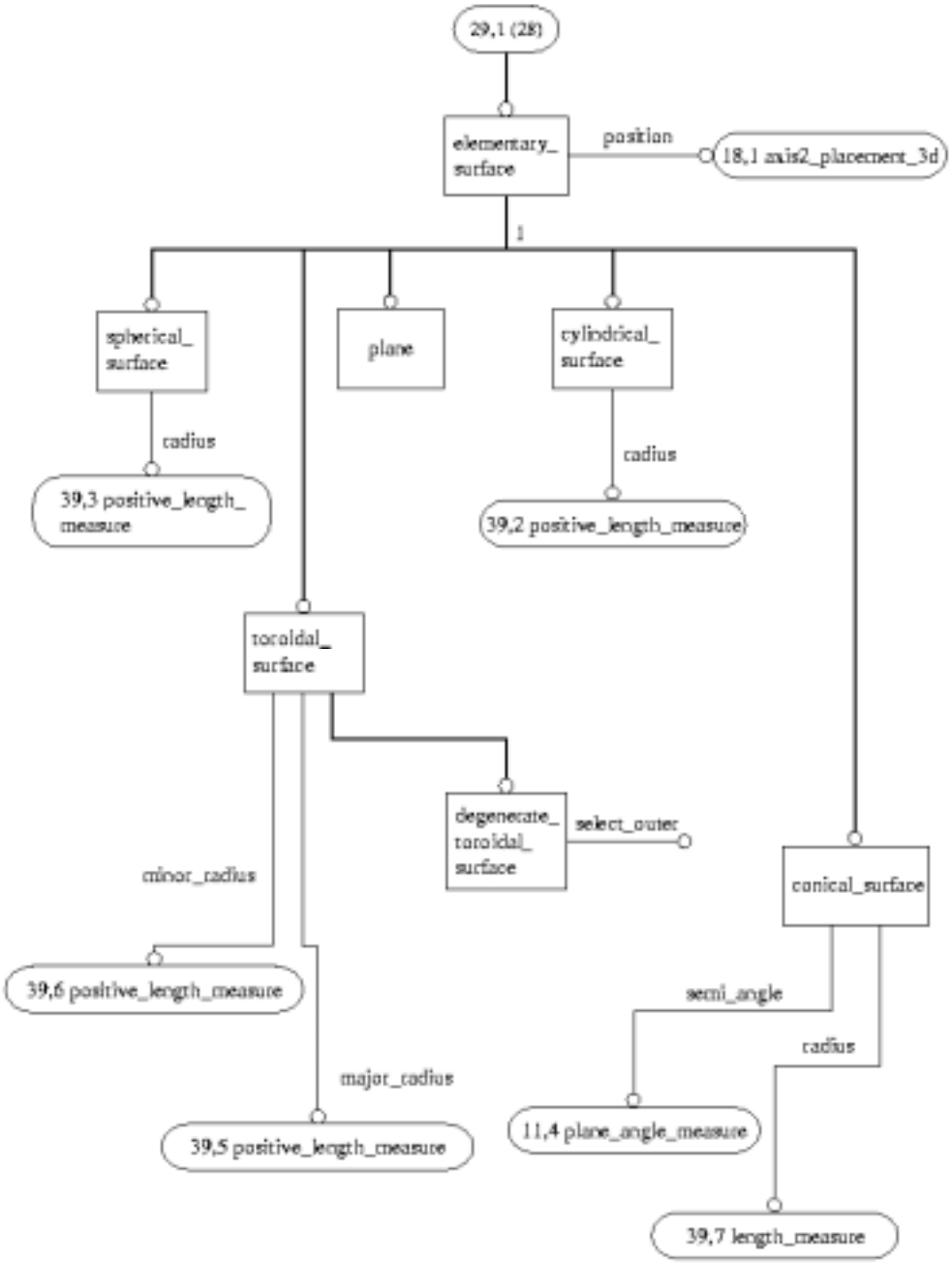

Figure H.29 - AIM EXPRESS-G diagram 29 of 41

© ISO 2001 — All rights reserved

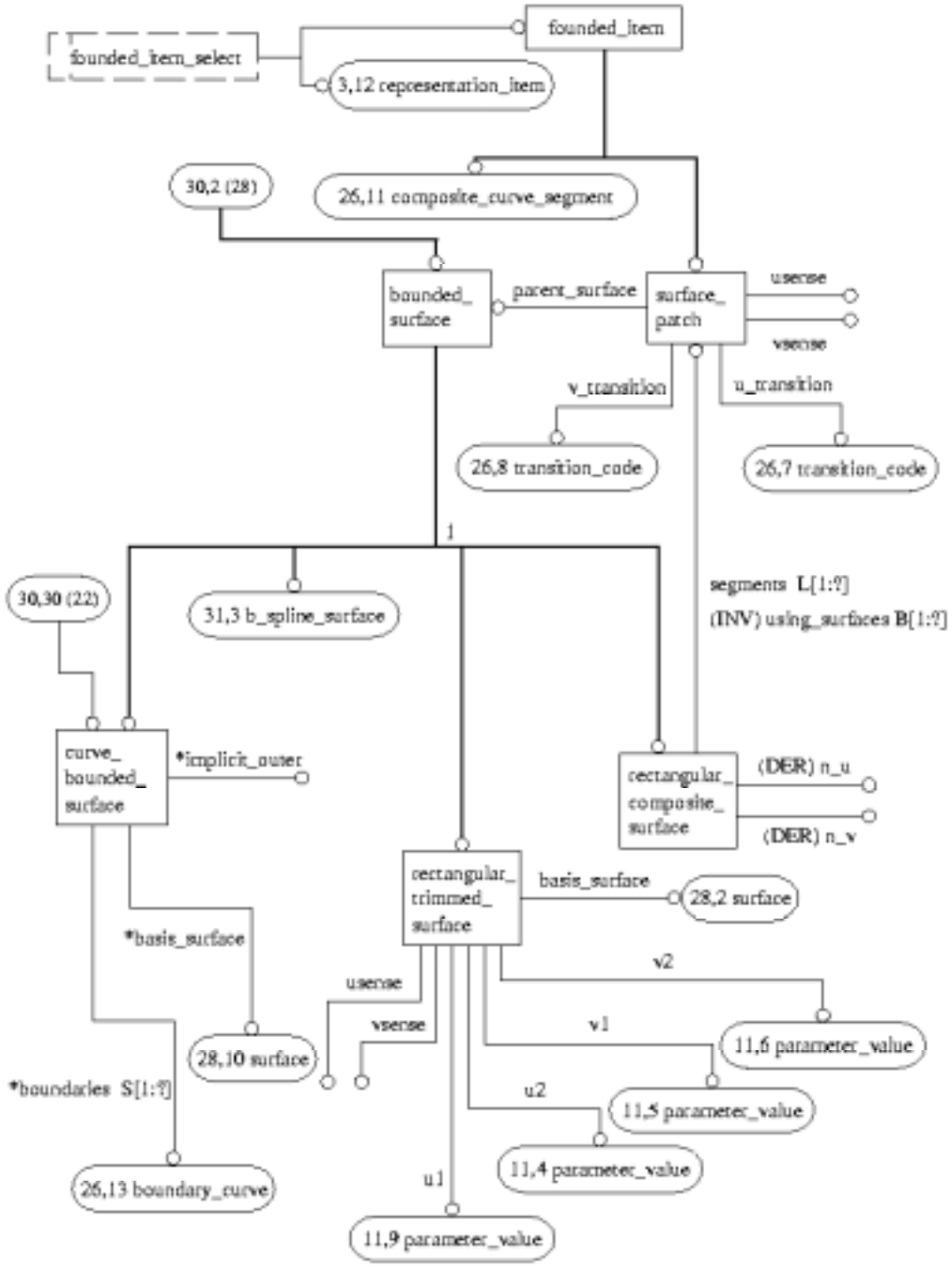

Figure H.30 - AIM EXPRESS-G diagram 30 of 41

 © ISO 2001 — All rights reserved

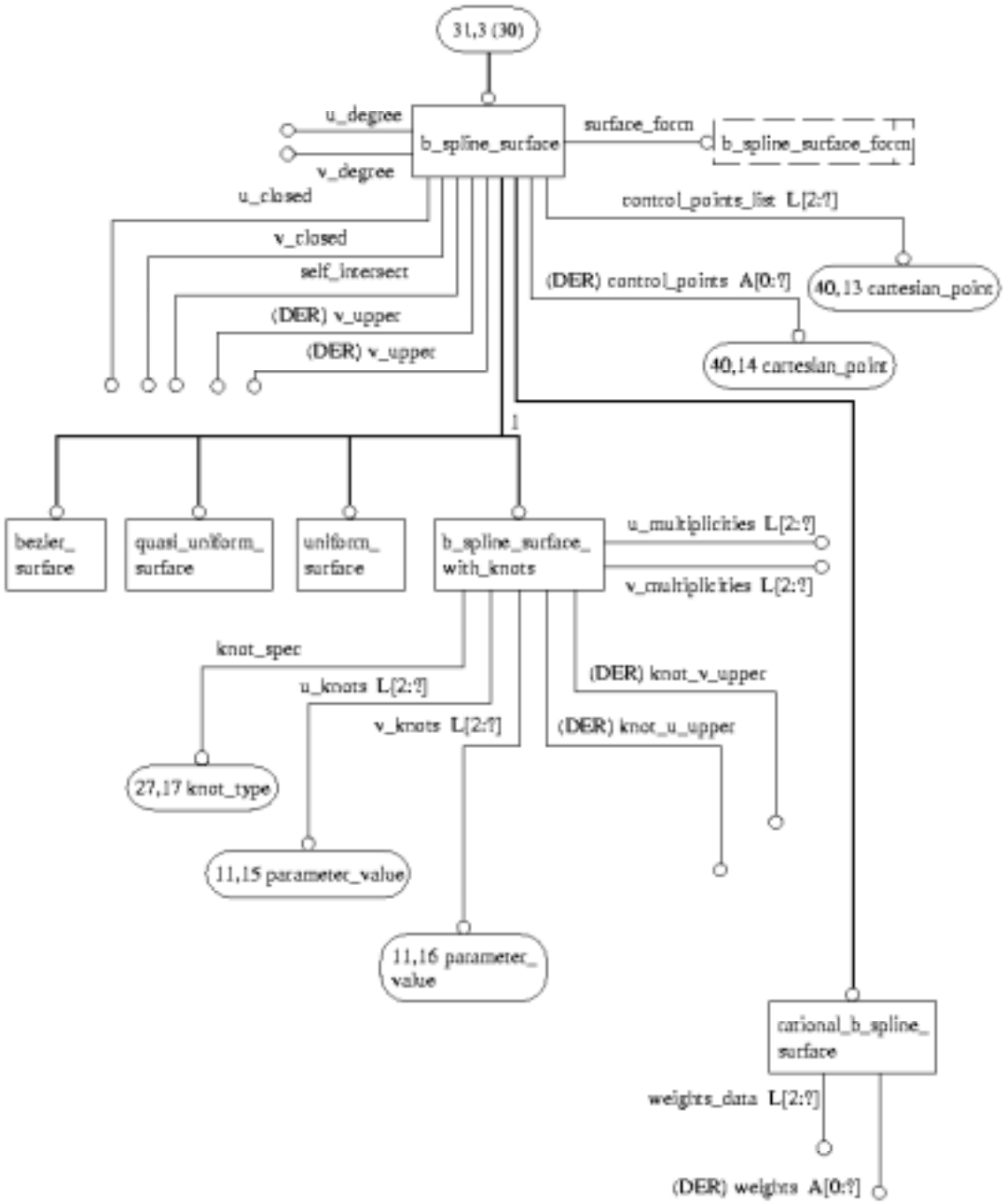

Figure H.31 - AIM EXPRESS-G diagram 31 of 41

© ISO 2001 — All rights reserved

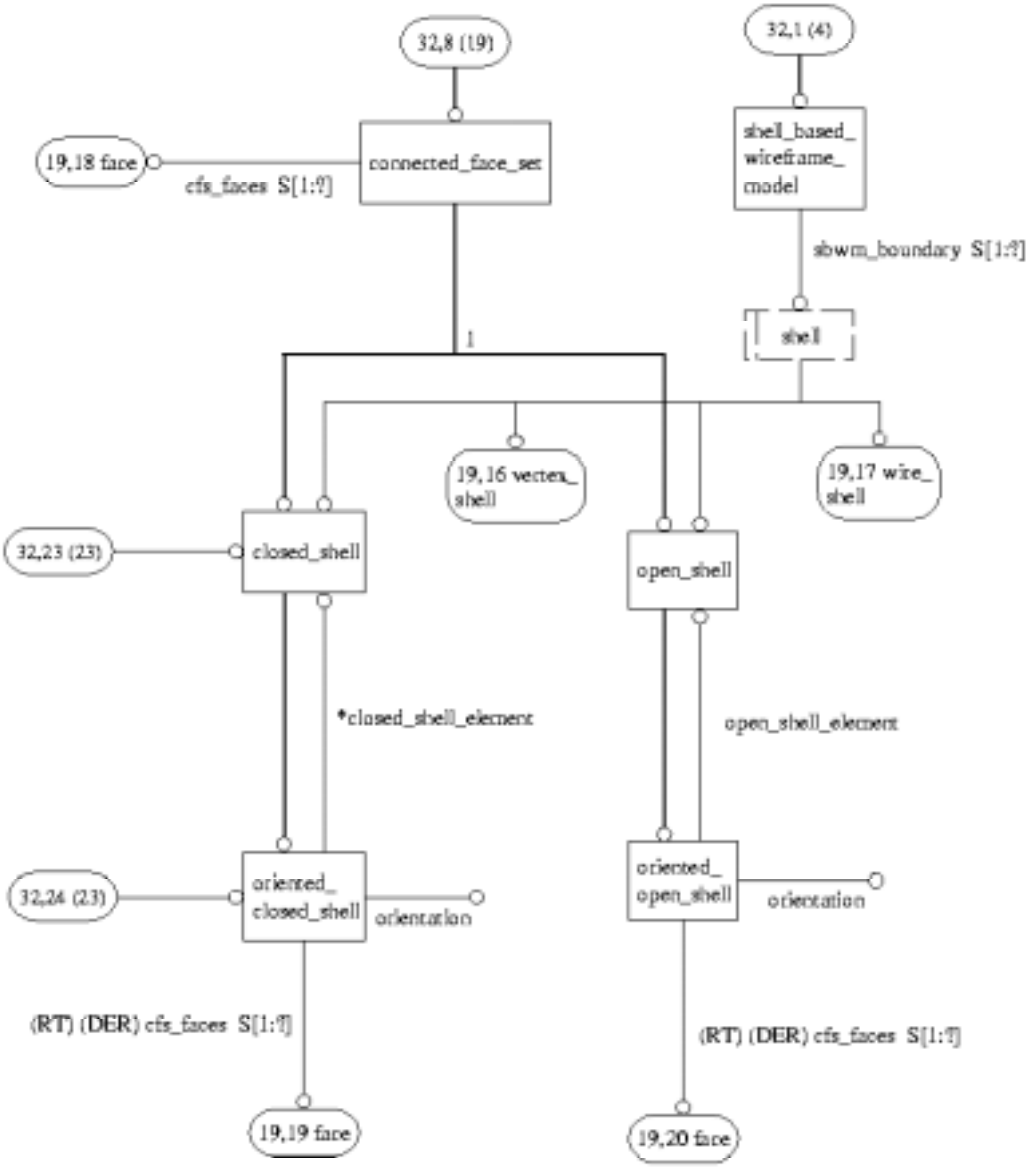

Figure H.32 - AIM EXPRESS-G diagram 32 of 41

 © ISO 2001 — All rights reserved

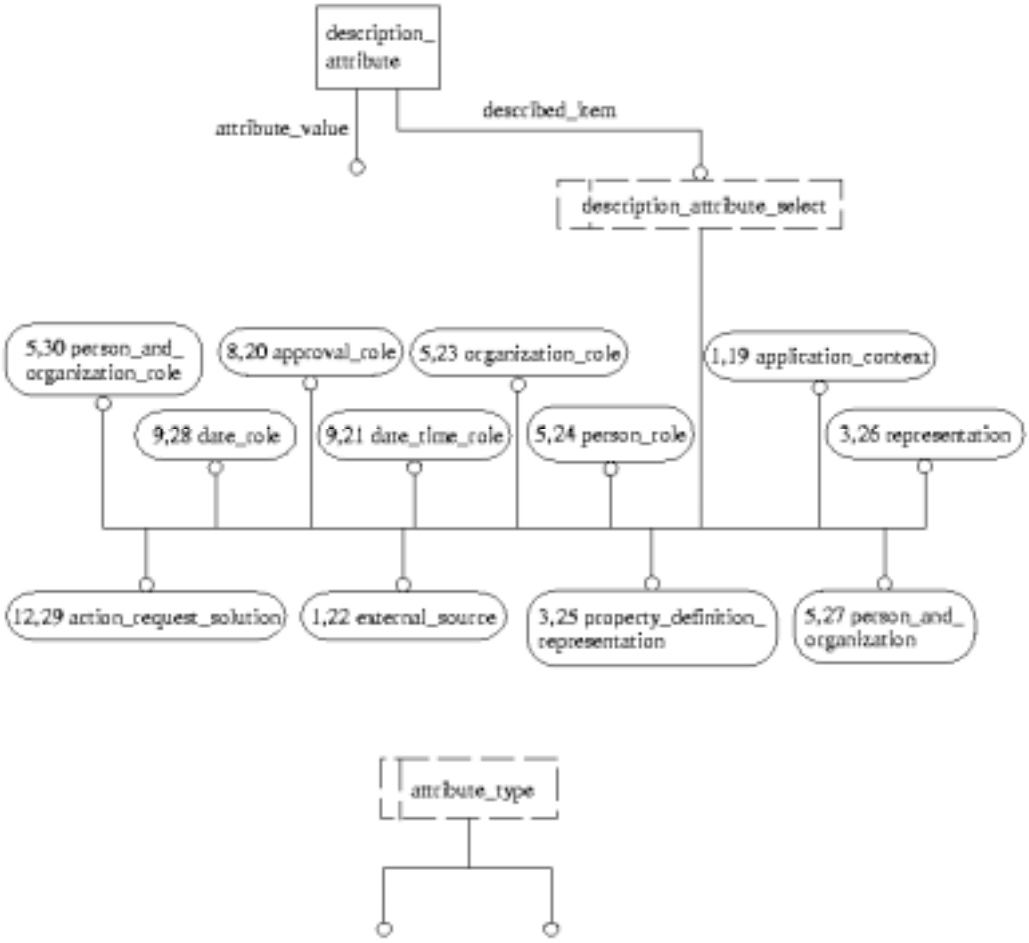

Figure H.33 - AIM EXPRESS-G diagram 33 of 41

© ISO 2001 — All rights reserved

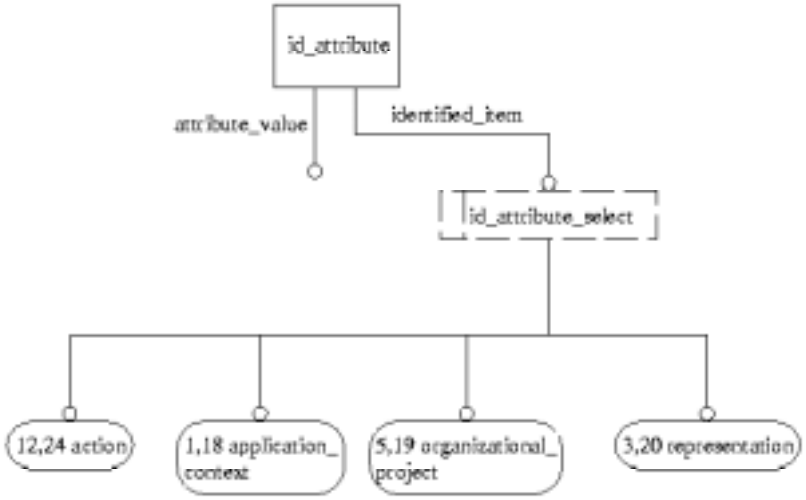

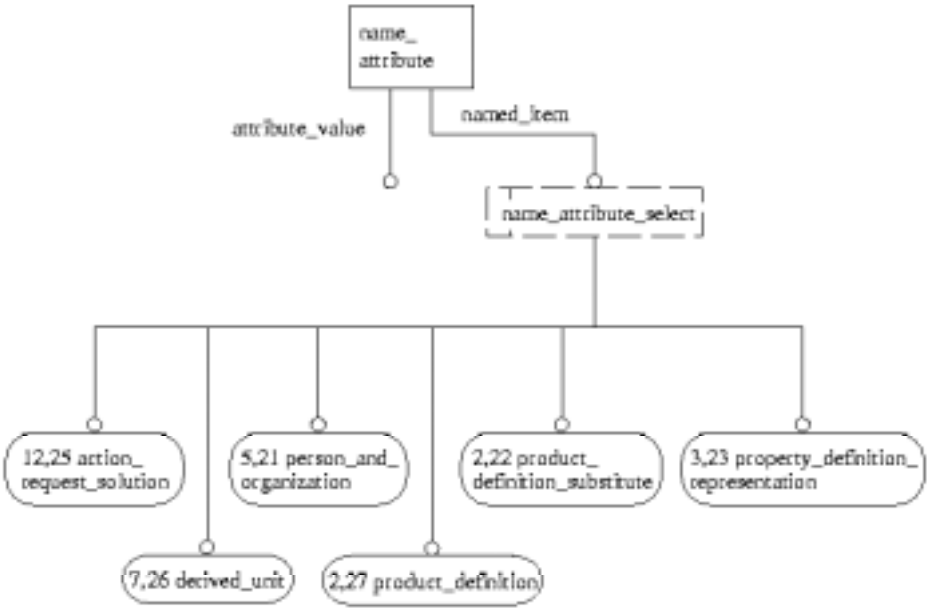

Figure H.34 - AIM EXPRESS-G diagram 34 of 41

 © ISO 2001 — All rights reserved

Figure H.35 - AIM EXPRESS-G diagram 35 of 41

© ISO 2001 — All rights reserved

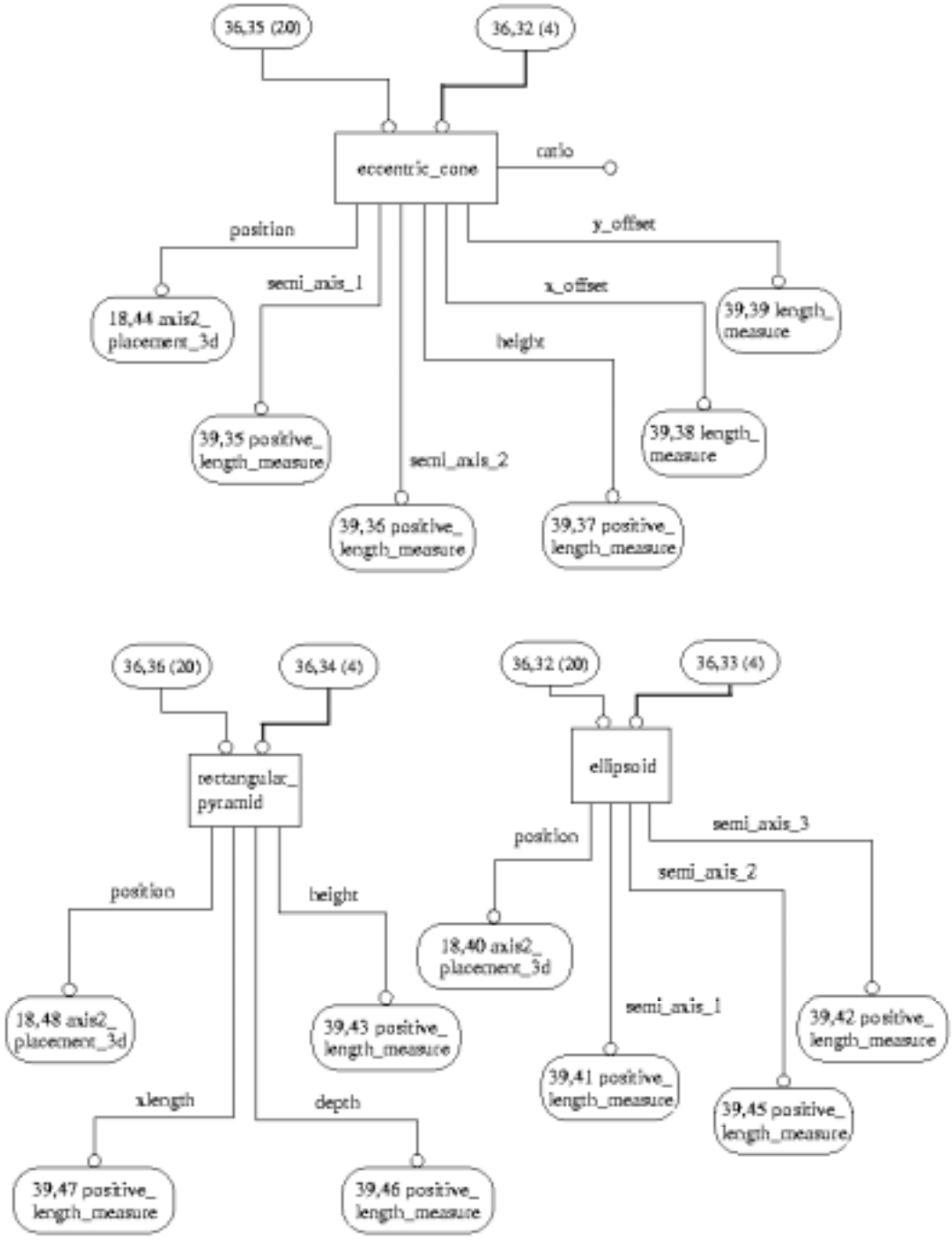

Figure H.36 - AIM EXPRESS-G diagram 36 of 41

 © ISO 2001 — All rights reserved

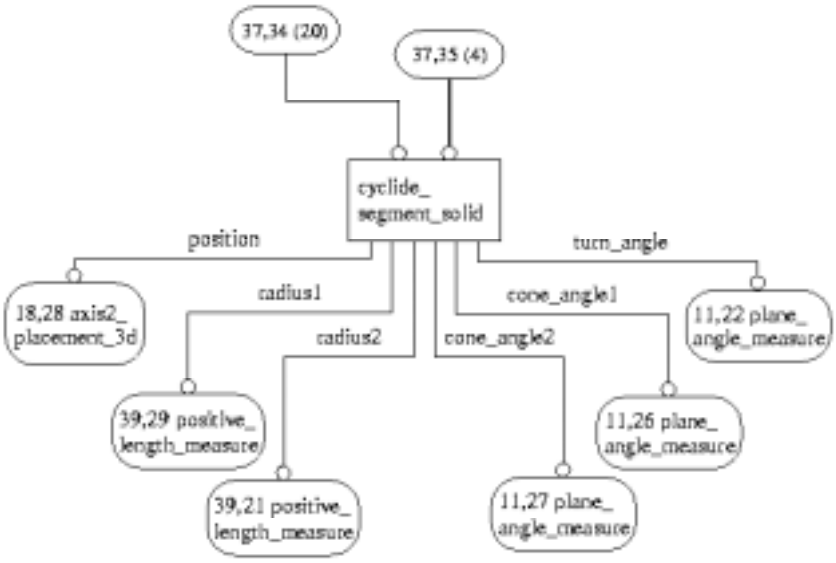

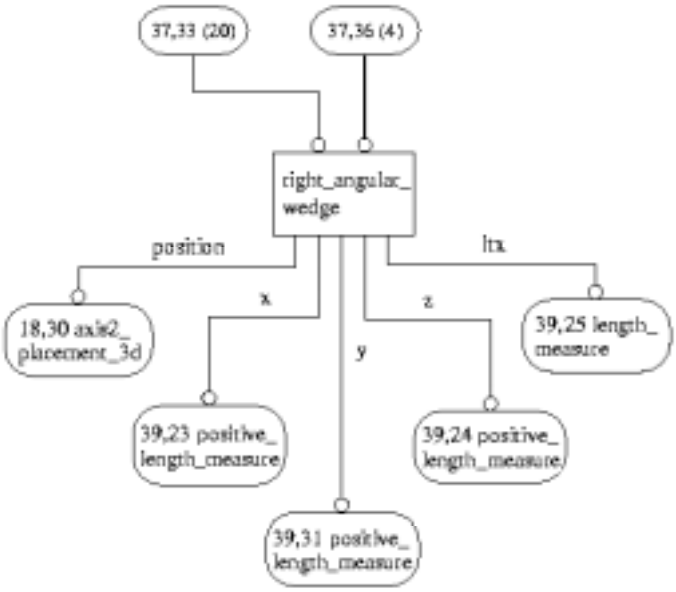

Figure H.37 - AIM EXPRESS-G diagram 37 of 41

© ISO 2001 — All rights reserved

Figure H.38 - AIM EXPRESS-G diagram 38 of 41

 © ISO 2001 — All rights reserved

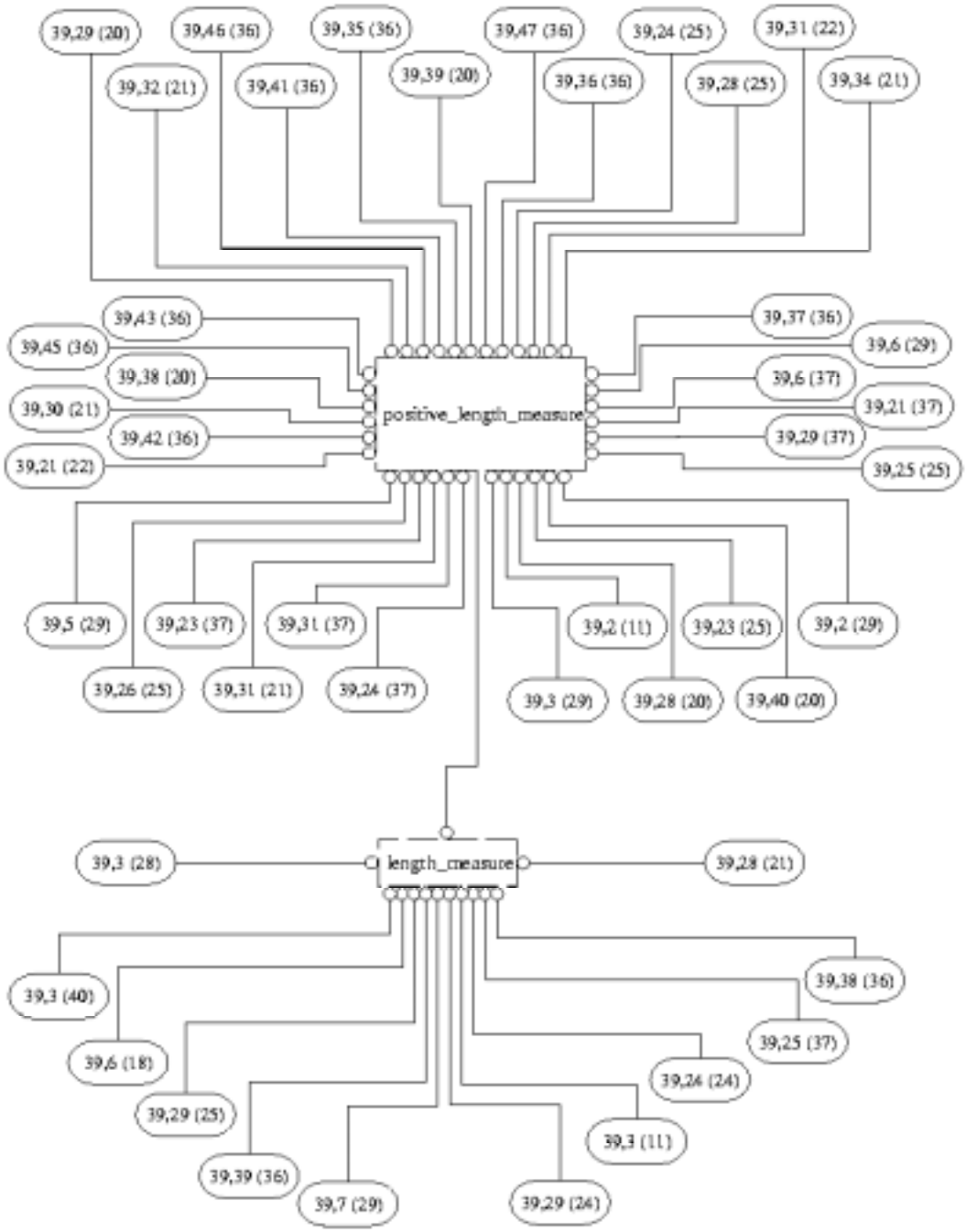

Figure H.39 - AIM EXPRESS-G diagram 39 of 41

© ISO 2001 — All rights reserved

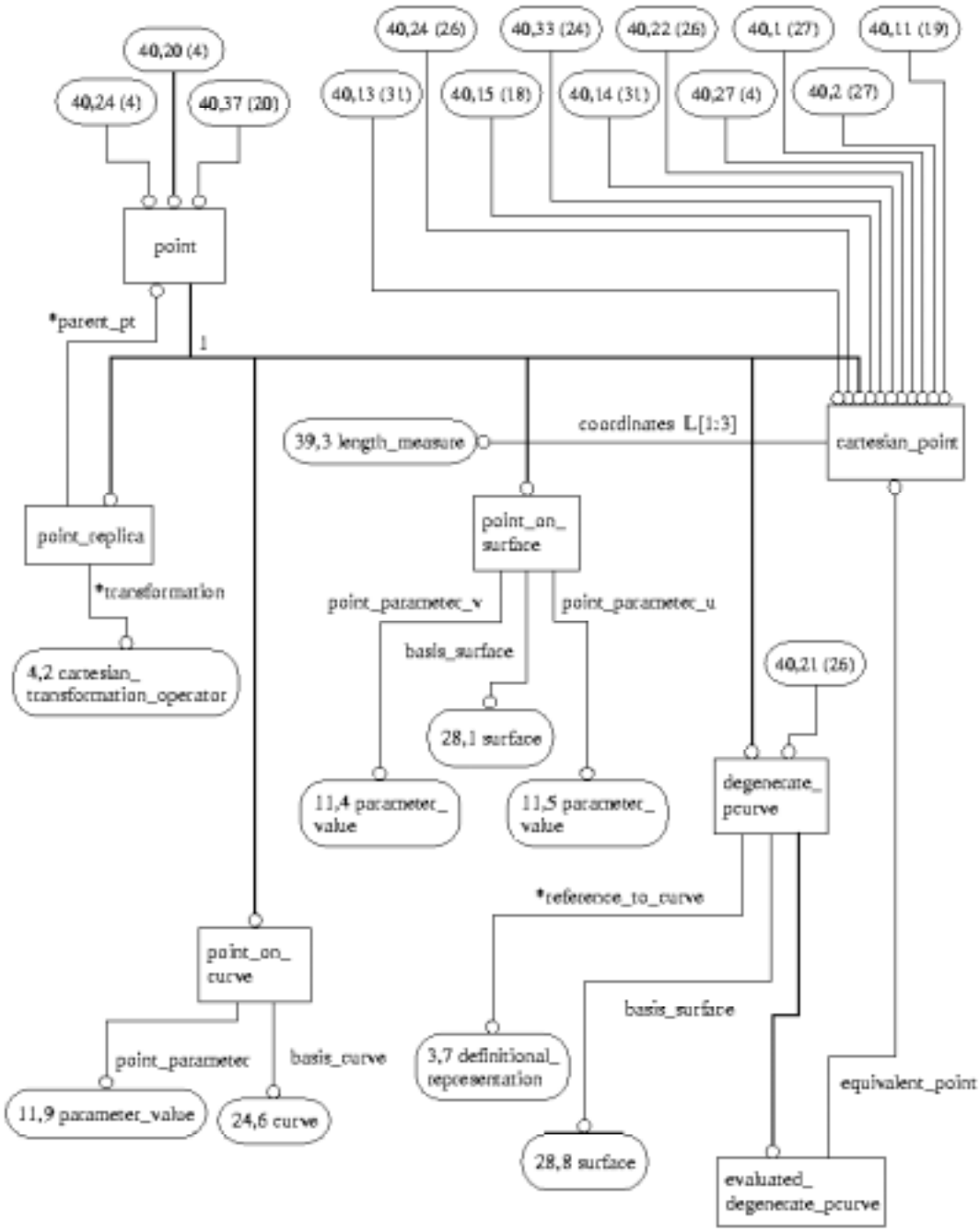

Figure H.40 - AIM EXPRESS-G diagram 40 of 41

 © ISO 2001 — All rights reserved

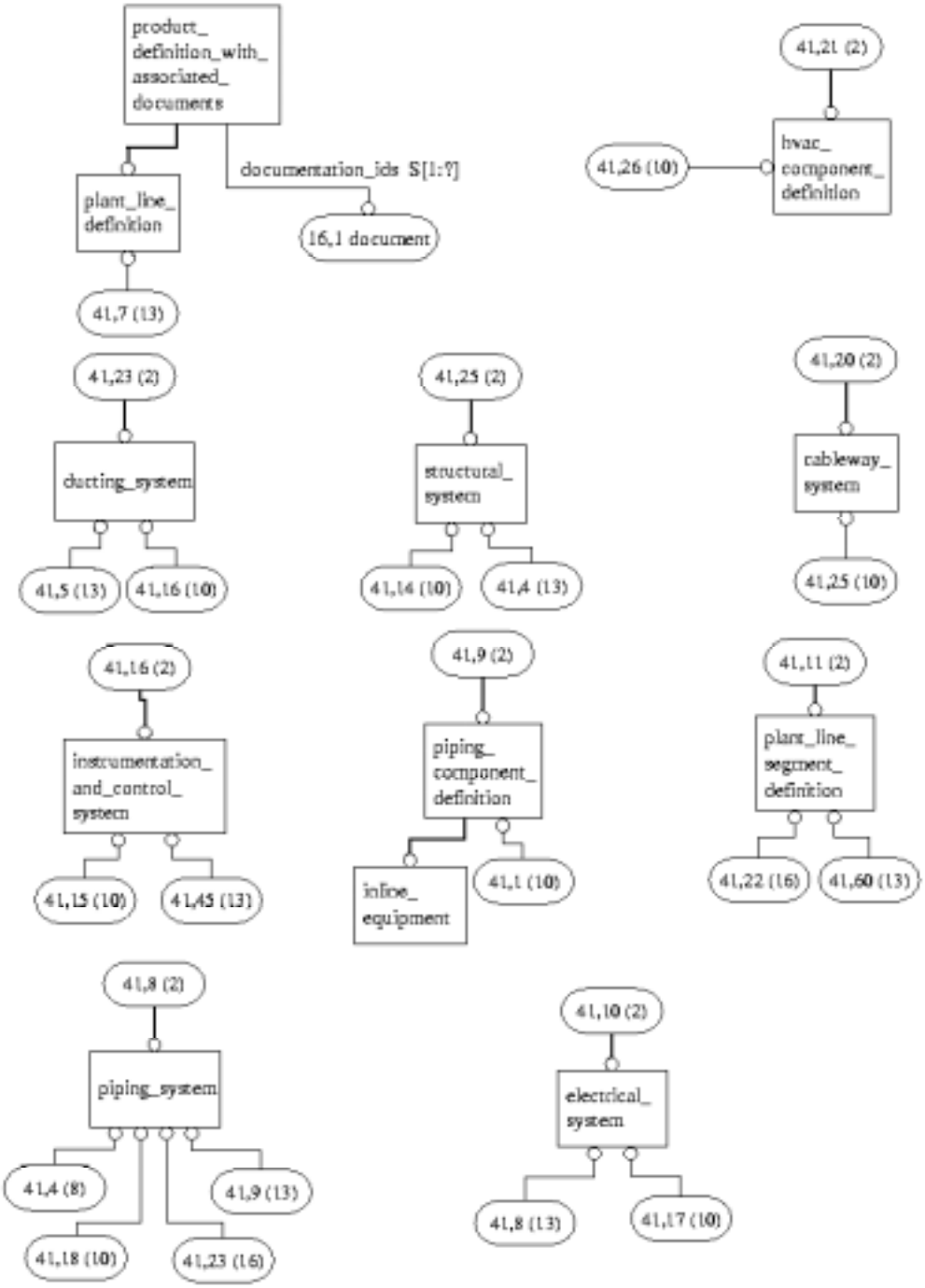

Figure H.41 - AIM EXPRESS-G diagram 41 of 41

© ISO 2001 — All rights reserved

Annex J
(informative)

AIM EXPRESS listing

This annex provides a listing of the complete EXPRESS schema specified in annex A of this part of ISO 10303 without comments or other explanatory text. It also provides a listing of the EXPRESS entity names and corresponding short names as specified in annex B of this part of ISO 10303.

The content of this annex is available in computer-interpretable form and can be found at the following URLs:

- Short names: http://www.mel.nist.gov/div826/subject/apde/snr/

- EXPRESS: http://www.mel.nist.gov/step/parts/part227e2/cd1/

If there is difficulty accessing these sites contact ISO Central Secretariat or contact the ISO TC 184/SC4 Secretariat directly at: sc4sec@cme.nist.gov.

NOTE The information provided in computer-interpretable form at the above URLs is informative. The information that is contained in the body of this part of ISO 10303 is normative.

 © ISO 2001 — All rights reserved

Annex K
(informative)

Application protocol usage guide

This annex provides an explanation and guidance on the usage of this part of ISO 10303. The annex is divided into sections; each section addresses a different important or high-value topic or capability of this part of ISO 10303.

NOTE The material in this annex differs from that in the Technical Discussion, annex L, in that the purpose of the material presented herein is to explain how to use this part of ISO 10303 in several important areas.

The guidelines provided in this annex are suggestions for best usage of this part of ISO 10303. They shall be interpreted by users of this standard as recommendations rather than as requirements.

NOTE A detailed Usage Guide for this part of ISO 10303 for Ship Piping has been published as a separate document [15].

K.1 Identifiers

Identifiers are alphanumeric labels that uniquely identify an instance of an entity within a given data population. The data population may be either (1) the boundaries of an exchanged data file, (2) the boundaries of a particular project, or (3) the life-cycle of a plant. The guidelines provided herein fully address (1), but only partially address (2) and (3) since the actions and policies involved in a design project or the life-cycle of a process plant are beyond the scope of this part of ISO 10303. These guidelines do not address the instance identifiers required by ISO 10303-21.

Identifiers as used within this part of ISO 10303 fall into two classes. One class are application object identifiers that are specified in Clause 4 and the ARM. These application object identifiers and their corresponding AIM identifier and recommended usage or interpretation are listed in table K.1. The second class are those that are specified in the AIM. These AIM identifiers and their corresponding ARM uses and recommended usages or interpretations are listed in table K.2.

All application object identifiers shall be unique within the context of an exchange file and should be unique within both a project and through the life-cycle usage of a process plant. The identifier may correspond to a product data identifier used in other representations of product data, such as a part number on a drawing. If the application object identifier does not correspond to a real world identifier, an identifier shall be fabricated based on policies and procedures of the particular project or plant. This identifier is more than a system generated identifier in that it should have persistence over time as the data is used and exchanged.

© ISO 2001 — All rights reserved

Table K.1 - Application object identifiers

Application object identifier	AIM identifier	Recommended usage or interpretation
Access_opening_id	shape_aspect.name	This attribute differentiates one Hvac_access_opening on an Hvac_component from another.
Branch_sequence_id	shape_aspect_relationship.name	This specifies an alphanumeric identifier that indicates the order that branches extend from the main Hvac_section_segment or th emain Piping_system_line_segment.
Building_id	representation	This specifies a unique number used to identify the building.
Catalogue_id	document.id	This corresponds to a volume number or issue number or a date that uniquely identifies a published (i.e,. configuration controlled) version of a catalogue. This value should be unique across the project and plant life cycle.
Change_id	action.name	This corresponds to designations such as Engineering Change Notice (ECN) numbers and similar codes used to identify, track, and control changes made to the design data. It is strongly recommended that it be unique throughout the life cycle of the plant.
Change_item_-id	change_item_id_-assignment (name_-assignment.name)	Since a Change_item is not a new thing, the Change_-item_id is an extra identifier associated with something that already exists. It does not correspond to any real world identifier. It is strongly recommended that the value of the attribute change_item_id_assignment (name_assignment.name) be unique throughout the life cycle of the plant.
Connecting_portion_id	identification_assignment.assigned_id	This specifies a descriptive identification of the area of the connection that is being inspected.
Connection_id	shape_aspect.name	A connection is a shape_aspect of the assembly that contains the connection. There may or may not be a real world identifier that corresponds to a particular connection in a plant system. If such an identifier does not exist, a value shall be fabricated to uniquely identify each connection.
Control_loop_-id	product.id	This corresponds to a real world control loop number or designation. It should be unique within a project and plant life cycle.
Design_-project_id	organization.id	This corresponds to a project code or some other identifier other than project number (a designation that maps to organization.description). This may be fabricated. It should be unique within the plant life cycle.

 © ISO 2001 — All rights reserved

Table K.1 - Application object identifiers - (continued)		
Application object identifier	**AIM identifier**	**Recommended usage or interpretation**
Document_id	document.id	This specifies a unique identification for the Document.
Element_id	representation_-item.name	This does not correspond to any real world identifier. The closest real world equivalent would be the id of a geometric element in a CAD system. It may be considered a system identifier used to differentiate among geometric elements. A value may be fabricated if there is a need to uniquely identify a geometric element in a scope beyond a geometric model file.
Flow_control_device_id	product.id	This specifies a unique identifier for each of the inline control devices.
Hvac_section_id	product_definition.id	This specifies a unique identifier for the Hvac_section_segment.
Hvac_specification_id	document.id	This attribute specifies a designation that differentiates one Hvac_specification from another.
Instrument_id	product.id	This attribute specifies the unique identifier for each Hvac_instrument.
Interference_id	product_definition_-relationship.name	If two plant_items clash, there is a product_definition_-relationship defined between them. This does not correspond to any real world identifier. It should be fabricated, but there is probably little need for it to be unique across a project or plant life cycle.
Line_to_line_-connection_id	shape_aspect_-relationship.name	This does not correspond to any real world identifier. It may be considered a system identifier used to differentiate among connections between line segments.
Location_id	representation_-item.name	A plant_item is located in a plant with a mapped_item as a representation. Hence, representation_item is used and location_id maps to representation_item.name. This does not correspond to any real world identifier.
Material_-requirement_id	product.id	This is the identifier of the material required by or for a plant_item. The material is considered as a product. It corresponds to a real world designation, but is not equivalent to a material specification identifier. It may be the part number of raw stock or a chemical designation like H_20.
Material_-specification_id	document.id	This corresponds to the identifier of a material specification or manual, e.g., ASTM A403.
Operating_-case_id	property_-definition_-relationship.name	This is a fabricated identifier that does not correspond to any real-world identifier. It is used only to differentiate among service_operating_cases.
Piping_-specification_id	document.id	This corresponds to the identifying designation of a piping specification. It is strongly recommended that it be unique throughout the project and plant life cycle.

© ISO 2001 — All rights reserved

Table K.1 - Application object identifiers - (continued)		
Application object identifier	**AIM identifier**	**Recommended usage or interpretation**
Piping_-system_line_id	product_definition.id	This is a fabricated designation that should have a one-to-one correspondence with the line number. It is used in addition to line number because line numbers sometimes have minor variations, e.g., Line 111a, Line 111-1.
Plant_id	product.id	This corresponds to the identifying designation given to a plant, if such a designation exists. If not, a value may be fabricated. There should be a one-to-one correspondence between this value and the plant name.
Plant_item_id	product_definition.id	Most often this will be interpreted as a Part Number. The specific interpretation depends on usage: Functional Design View - Plant Item Definition This value must be fabricated. There is no real-world equivalent in common use. Functional Design View - Plant Item Instance This value must be fabricated. It may be associated with zero or one TAG Number. Physical Design View - Plant Item Definition This value may be fabricated, but it typically corresponds to a Part Number. Physical Design View - Plant Item Instance This value may be fabricated, but it corresponds to the use of a part in a design (i.e., instance number). It may be associated with zero or one serial number.
Plant_item_-connector_id	shape_aspect.name	A connector is a shape_aspect of a plant_item. There may or may not be a real world identifier that corresponds to a particular connector of a plant system. If such an identifier does not exist, a value shall be fabricated to uniquely identify each connector.
Plant_process_capability_id	property_-definition.name	This does not correspond to any real world identifier. It may be considered a system identifier used to differentiate among process capabilities.
Plant_system_-id	product.id	This corresponds to a unique designation given to a system within a plant. It is strongly recommended that it be unique within a project and throughout the plant life cycle.
Reference_-geometry_id	representation_-item.name	This does not correspond to any real world identifier. It may be considered a system identifier used to differentiate among reference geometry.

 © ISO 2001 — All rights reserved

Table K.1 - Application object identifiers - (continued)		
Application object identifier	**AIM identifier**	**Recommended usage or interpretation**
Section_to_section_connection_id	shape_aspect_relationship.name	This specifies a unique identifier of the connection between two Hvac_section_segments.
Segment_id	product_definition.id	This is a fabricated designation that may or may not correspond to a real world designation. It is used principally to differentiate between segments of a line.
Selection_id	document_usage_-constraint. subject_element	This corresponds to a table number, chapter number, line or row number, section number, or some other designation that identifies a particular portion of a material specification or manual.
Set_id	product_definition.id	This specifies a unique identifier for a Bolt_and_nut_set or a Clamp_set.
Shape_id	property_-definition.name	Shape is a property of a plant_item. This does not correspond to any real world identifier, though it may be interpreted as a unique file name or drawing number for different representations of the shape of a plant_-item.
Site_feature_id	property_-definition.name	This may or may not correspond to a real world identifier. It may be fabricated to differentiate among site features. A site feature is a property of a site.
Site_id	characterized_-object.name	This corresponds to designations that identify a site or plot of land. Examples include municipal plot or tract designations or GIS descriptions. Sites cannot be defined unless they are associated with a plant. The value may be fabricated for a particular project or plant life cycle.
Source_id	external_source.source_id	This specifies a unique identification of the external origin of the Document.
Splitter_id	shape_aspect.name	This attribute specifies a unique identifier for the Splitter.
Stream_-design_id	characterized_-object.name	This may or may not correspond to a real world identifier. It uniquely identifies the definition of particular stream states. A value may be fabricated is there is a need to uniquely identify a stream state (i.e., design case) across a project or plant life cycle.
Subset_id	document_-relationship.name	This corresponds to a subsection reference or other designation that identifies a portion of a material specification.
Supplier_id	organization.id	This corresponds to a designation that uniquely identifies a supplier to a project or plant life cycle.
Support_-constraint_id	representation.name	This does not correspond to any real world identifier. It may be considered a system identifier used to differentiate among support components.

© ISO 2001 — All rights reserved

Table K.1 - Application object identifiers - (continued)		
Application object identifier	**AIM identifier**	**Recommended usage or interpretation**
Termination_id	shape_aspect.name	This does not correspond to any real world identifier. It may be considered a system identifier used to differentiate among terminations used to connect line segments.
Version_id	identification_assignment.assigned_id	This specifies a unique identification of a revision of a particular Document.
Weld_id	identification_assignment.assigned_id	This specifies an identification of the weld point at which the inspection is being made.

 © ISO 2001 — All rights reserved

Table K.2 - AIM identifiers

AIM identifier	ARM uses	Recommended usage or interpretation
document.id	catalogue_id piping_- specification_id material_- specification_id	As mapped.
organization.id	Design_project_id Supplier_id	As mapped.
person.id	none	Although individuals are not explicitly identified in the ARM, attributes such as approval.approver require the person entity. A unique value should be fabricated to differentiate among persons.
product.id	Control_loop_id Plant_id Plant_system_id Material_- requirement_id	As mapped.
product_- definition.id	Plant_item_id Piping_system_- line_id Segment_id	As mapped.
product_- definition_- formation.id	None	This may or may not correspond to a real world identifier. It is used to differentiate among versions of product design.
product_- definition_- formation_- relationship.id	None	This does not correspond to a real world identifier. A value shall be fabricated to differentiate among product_definition_formation_relationships.
product_- definition_- relationship.id	None	This does not correspond to a real world identifier. A value shall be fabricated to differentiate among product_definition_formation_relationships.
representation_- context.context_ identifier	None	This does not correspond to a real world identifier. A value shall be fabricated that is unique to a specific type of context and differentiates among local coordinate systems.
versioned_- action_request.id	None	This may or may not correspond to a real world identifier. If it does, it may correspond to an identifier found on a change request.

K.2 Units

Most measures will be expressed in terms of SI units. For units such as inches, instances of conversion_based_unit must be used. Figure K.1 contains a fragment of the EXPRESS-G for the

© ISO 2001 — All rights reserved

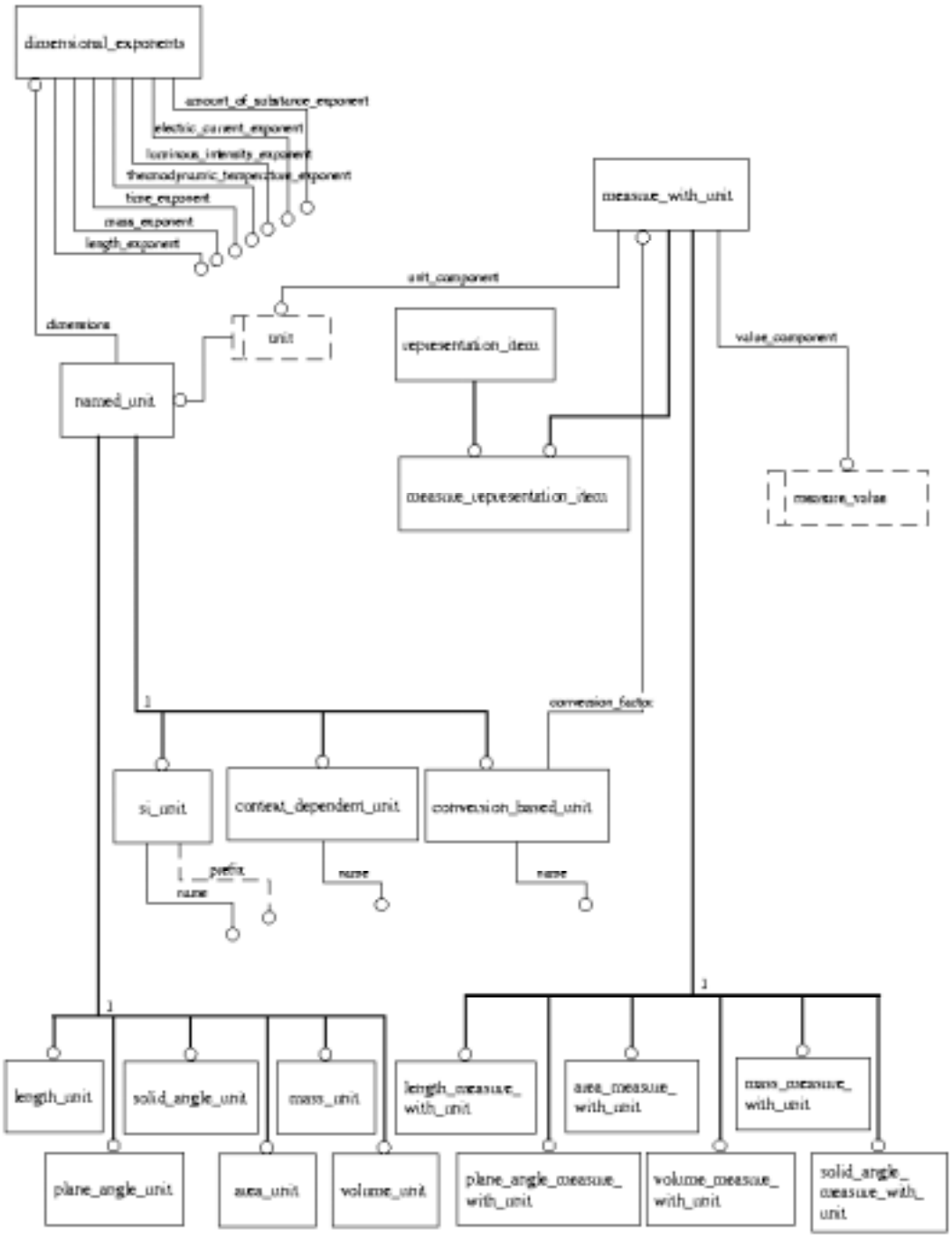

Figure K.1 - Fragment of measure_schema in EXPRESS-G

 © ISO 2001 — All rights reserved

measure schema (see ISO 10303-41). Compare the EXPRESS with the following fragment of an ISO 10303-21 data file:

```
/* length dimension's exponent = 1 */
#22=DIMENSIONAL_EXPONENTS(1.0, 0.0, 0.0, 0.0, 0.0, 0.0, 0.0);
#200=(LENGTH_UNIT()NAMED_UNIT(#22)SI_UNIT(.MILLI.,.METRE.));
/* Inches unit - length measure*/
/* conversion factor from mm to inches: 1 inch = 25.4 mm */
#201=LENGTH_MEASURE_WITH_UNIT(LENGTH_MEASURE(25.4),#200);
/* specifies length unit - based on conversion from millimeters */
#202=(CONVERSION_BASED_UNIT('inches',#201)LENGTH_UNIT()NAMED_UNIT
(#22));
```

The units that the conversion is based upon are millimetres. The units are represented by instance #200. This instance is:

— a named unit with dimensional exponents of length;
— a length_unit; and
— a SI unit: millimetre.

Instance #201 represents the conversion of millimetre values to another value. The conversion factor is 25.4, meaning that millimetres are multiplied by 25.4 to yield another value.

Instance #202 applies the name of "inches" to the converted value. It is also a named unit (with dimensional exponents of length) and a length unit.

Note that these data are not a *converted* value, but rather are the specification of a unit (inches in #202) derived from a known SI unit. Measures that use inches would reference #202. For example, the datum:

```
/* Nominal size = 0.5" */
#100=(LENGTH_MEASURE_WITH_UNIT()
MEASURE_REPRESENTATION_ITEM()
MEASURE_WITH_UNIT(LENGTH_MEASURE(0.5),#202)
REPRESENTATION_ITEM(''));
```

Represents a nominal size of one-half inch because it references #202 as the unit component.

Axis_placement

Position and orientation of objects within a geometric coordinate system are either inherently part of the geometric definition of the object or are defined through a transformation mechanism. The position and orientation mechanisms used for transformation in ISO 10303-42 are cartesian_-points and the "placement" entities. EXPRESS definitions of the 3D versions of these placement entities are:

```
ENTITY placement
  SUPERTYPE OF (ONEOF(axis1_placement,axis2_placement_2d,axis2_placement_3d))
  SUBTYPE OF (geometric_representation_item);
  location : cartesian_point;
END_ENTITY;
```

© ISO 2001 — All rights reserved

```
ENTITY axis2_placement_3d
  SUBTYPE OF (placement);
  axis          : OPTIONAL direction;
  ref_direction : OPTIONAL direction;
DERIVE
  p             : LIST [3:3] OF direction := build_axes(axis,ref_direction);
WHERE
  WR1: SELF\placement.location.dim = 3;
  WR2: (NOT (EXISTS (axis))) OR (axis.dim = 3);
  WR3: (NOT (EXISTS (ref_direction))) OR (ref_direction.dim = 3);
  WR4: (NOT (EXISTS (axis))) OR (NOT (EXISTS (ref_direction))) OR
       (cross_product(axis,ref_direction).magnitude > 0.0);
END_ENTITY;
```

The entity axis2_placement_3d is location point (SELF\placement.location.dim) and a set of orthogonal axes defined by the derived attribute axis2_placement_3d.p. The derivation uses the Z axis specified by the attribute axis2_placement_3d.axis and, optionally, an approximate X axis specified by the axis2_placement_3d.ref_direction to construct a set of orthogonal axes. The following fragment of an ISO 10303-21 data file illustrates a set of axes at the origin:

```
#20=CARTESIAN_POINT('origin point',(0.0, 0.0, 0.0));
#40=DIRECTION('X',(1.0,0.0,0.0));
#41=DIRECTION('Y',(0.0,1.0,0.0));
#42=DIRECTION('Z',(0.0,0.0,1.0));
#66=AXIS2_PLACEMENT_3D('generic origin',#20,#42,#40);
```

K.4 describes how axis2_placements are used for positioning and orientation of shape representations.

K.3 Mapped_item and representation_item

Figure K.2 illustrates how the shape representation of one object is positioned and oriented in another shape representation. The positioning is accomplished by "superimposing" an axis2_placement_3d (A3: (X3, Y3, Z3)) in one shape representation (SR-B) onto another axis2_placement_3d (A2: (X2, Y2, Z2)) in a different shape representation (SR-C). Since A2 is positioned relative to all the geometric elements in SR-C, placing and orienting A3 so that it corresponds to A2 in SR-C will produce the effect of positioning SR-B in SR-C. This is accomplished with mapped_item and representation_item.

The EXPRESS for mapped_item and representation_map are as follows:

```
ENTITY mapped_item
  SUBTYPE OF (representation_item);
    mapping_source : representation_map;
    mapping_target : representation_item;
  WHERE
    wr1: acyclic_mapped_representation(using_representations(SELF),
         [SELF]);
END_ENTITY; -- mapped_item
```

 © ISO 2001 — All rights reserved

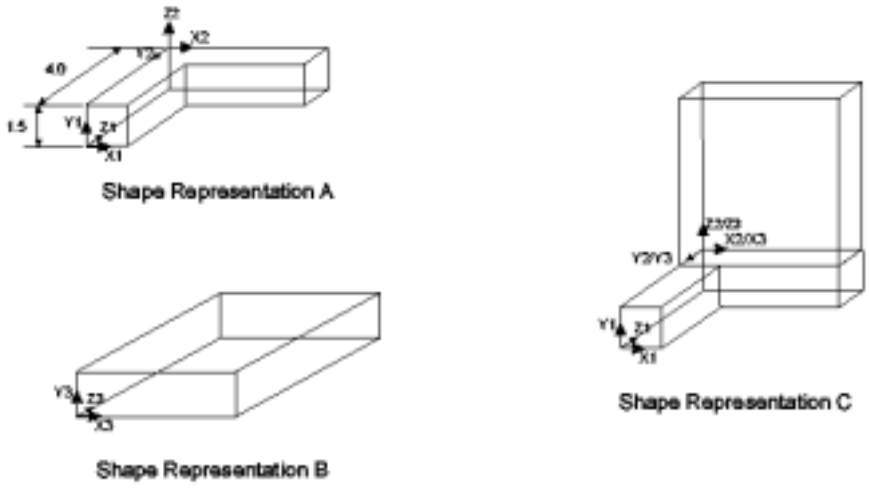

Figure K.2 - Positioning of shape representations

```
ENTITY representation_map;
   mapping_origin        : representation_item;
   mapped_representation : representation;
  INVERSE
   map_usage : SET [1:?] OF mapped_item FOR mapping_source;
  WHERE
   wr1: item_in_context(SELF.mapping_origin,SELF.mapped_representation.
          context_of_items);
END_ENTITY; -- representation_map
```

Using the data from above plus unit information:

```
#1=GLOBAL_UNIT_ASSIGNED_CONTEXT('contxtid:c1','contxttype: length',(#2));
#2=(LENGTH_UNIT()NAMED_UNIT(#3)SI_UNIT(.MILLI.,.METRE.));
#3=DIMENSIONAL_EXPONENTS(1.0, 0.0, 0.0, 0.0, 0.0, 0.0, 0.0);
#20=CARTESIAN_POINT('origin point',(0.0, 0.0, 0.0));
#40=DIRECTION('X',(1.0,0.0,0.0));
#41=DIRECTION('Y',(0.0,1.0,0.0));
#42=DIRECTION('Z',(0.0,0.0,1.0));
#66=AXIS2_PLACEMENT_3D('generic origin',#20,#42,#40);
```

The shape_representation of A from figure K.2 is:

```
#100=CARTESIAN_POINT('location of block B',(0.0, 1.5, 4.0));
#101=AXIS2_PLACEMENT_3D('orientation of block B',#100,#41,#40);
#105=SHAPE_REPRESENTATION('shape representation A',(#66, #101, <shape of L-
shape block>),#1);
```

Things to note about these data include:

© ISO 2001 — All rights reserved

— cartesian_point #100 as used in axis2_placement_3d #101 (A2) is the position of A2 and, thus, of shape representation B (SR-B).

— the Z axis of the axis2_placement_3d #101 *points in the Y direction* within shape representation A. This is very significant because by aligning the *Z axes* of A3 in shape representation B and A2 in shape representation A, the desired orientation of shape representation B in shape representation C is achieved.

— for simplicity, the explicit geometry of the L-shaped block is not included in shape representation #105.

The shape representation of B is:

```
#110=SHAPE_REPRESENTATION('shape representation B',(#66, <shape of block>),#1);
```

Things to note about this datum include:

— the origin axes of both shape representation A #105 and shape representation B #110 are the same. This does not present a conflict because the same data is simply used differently, i.e., used in different contexts. The shape representation contexts of both of the representations are different. No assumption shall be made concerning the relationship of these axes unless they are made to be part of the same context.
The shape representation of C requires the use of representation_item and mapped_item.

```
#120=REPRESENTATION_MAP(#66,#110);
#121=MAPPED_ITEM('positioned shape B in C',#120,#101);
#122=SHAPE_REPRESENTATION('shape representation C',(<shape of L-shaped block>, #121),#1);
```

Things to note about these data include:

— representation_map #120 specifies the base mapping information: the mapped_representation #110 and the mapping_origin, #66. The mapping_origin is the element *in the representation* of the mapped_representation that is used to position and orient the shape. Most often this will be a set of axes at the origin, but it may be other things as well.

— mapped_item #121 specifies the mapping transformation. The mapping_source is the representation_map to be transformed. The mapping_target is the *destination* of the transformation. The representation_map is moved such that the axis2_placement_3d.location of the mapping_origin is at, on top of, or corresponds with the axis2_placement_3d.location of the mapped_item.mapping_target. Similarly, the representation_map is rotated such that the axes of the mapping_origin are aligned with the axes of the mapping_item.mapping_target.

— the shape representation C consists of the L-shaped block, that is the same shape representation element used for shape representation A, and the mapped_item #121, that is the positioned shape of shape representation B.

 © ISO 2001 — All rights reserved

This is just one approach for positioning the shape representation of objects within other shape representations. It is strongly recommended that axis2_placement_3d objects be used for the representation_map.mapping_origin and mapped_item.mapping_target.

K.4 Interfaces to ISO 13584 and ISO 10303-221

This part of ISO 10303 may be used in conjunction with ISO 13584 [13] to identify catalogue items (Parts Libraries) and classifications, and with ISO 10303-221, annex M [3], to classify plant items, plants, plant systems, and connectors. With respect to this part of ISO 10303, both ISO 13584 [13] and ISO 10303-221 are considered as external sources and are referenced using known_source (see). A known_source is both an external_source and a pre_defined_item (see). It is used for referencing ISO 13584 because ISO 13584 is an external source of information with respect to this part of ISO 10303 and is also pre-defined with respect to this part of ISO 10303.

ISO 10303-221 is referenced only as an external source. It is not pre-defined with respect to this part of ISO 10303 for reasons that are not explained here because they are not germaine to the annex K or to this part of ISO 10303.

In the following explanation, the only difference between a reference to ISO 13584 and ISO 10303-221 is that a reference to ISO 13584 is a complex instance consisting of external_source, known_source, and pre_defined_item and a reference to ISO 10303-221 is a simple instance of external_source. Pre_defined_item and known_source are used to explicitly list the names of the allowable external sources in this part of ISO 10303.

The EXPRESS code for the external source is presented below. Figure K.3 shows the EXPRESS-G version.

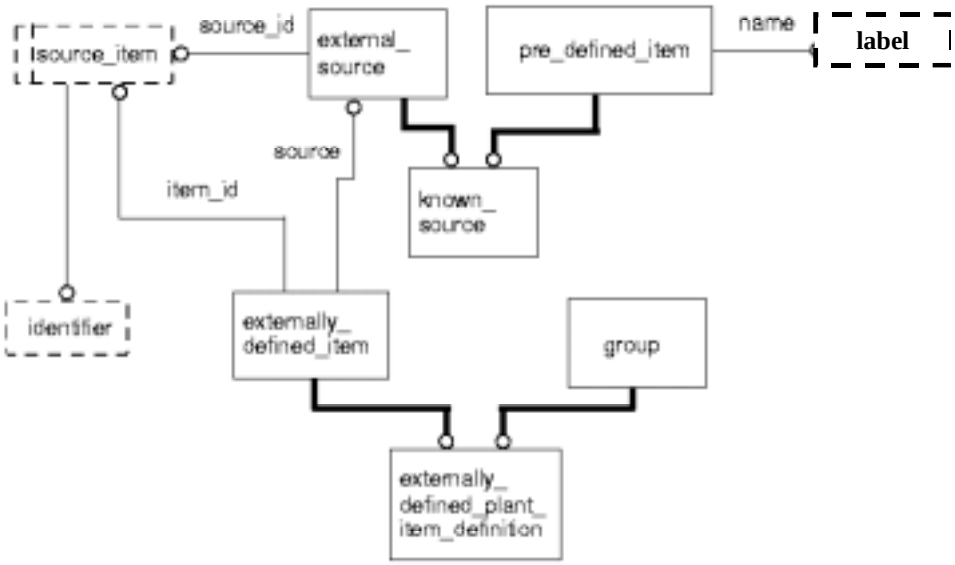

Figure K.3 - Known_source for externally defined items

© ISO 2001 — All rights reserved

```
ENTITY  external_source;
     source_id : source_item;
  END_ENTITY; -- external_source

  ENTITY  pre_defined_item;
     name : label;
  END_ENTITY; -- pre_defined_item

  ENTITY  known_source
    SUBTYPE OF (external_source, pre_defined_item);
    WHERE
      wr1: SELF\pre_defined_item.name IN ['ISO 13584 Dictionary',
             'ISO 13584 Parts Library'];
  END_ENTITY; -- known_source

  TYPE  source_item = SELECT
    (identifier);
  END_TYPE; -- source_item

  ENTITY  externally_defined_item;
     item_id : source_item;
     source  : external_source;
  END_ENTITY; -- externally_defined_item


  ENTITY  externally_defined_plant_item_definition
    SUBTYPE OF (product_definition, externally_defined_item);
  END_ENTITY; -- externally_defined_plant_item_definition
```

For plant items that are defined externally to the exchange file (e.g., as in a reference to a part in a part library or to a catalogue item), the EXPRESS would be used as shown in table K.3.

 © ISO 2001 — All rights reserved

Table K.3 - EXPRESS for externally defined plant items

EXPRESS	Explanation	Example
known_source/-predefined_item.name	Provides the name of the known external source.	Example: 'ISO 13584 Parts Library'
known_source/external_-source.source_id	Identifies the external source.	Example: 'ISO 13584-21:1996'
known_source	The complex instance that represents the external source.	Example: #10=(known_source() pre_defined_item('ISO 13584 Parts Library') external_source('ISO 13584-21:1996'))
externally_defined_item.-source	References the known_-source that contains the externally defined item.	Example: references ("points at") the known_source for ISO 13584, #10 above.
externally_defined_-item.item_id	Identifies the item within the known_source.	Example: 'Reciprocating Pump Model 100'
externally_defined_item/-product_definition/-externally_defined_plant_-item_definition	The complex instance that represents an externally defined item in an exchange file using the AP 227 AIM.	Example: a reference to a catalogue item within a use of this part of ISO 10303.

Externally defined classifications follow the same approach substituting group for product_-definition:

```
ENTITY  externally_defined_classification
  SUBTYPE OF (group, externally_defined_item);
  WHERE
    wr1: SIZEOF(QUERY ( ca <* QUERY ( ga <* USEDIN(SELF,
      'PLANT_SPATIAL_CONFIGURATION.GROUP_ASSIGNMENT.ASSIGNED_GROUP')
      | ('PLANT_SPATIAL_CONFIGURATION.CLASSIFICATION_ASSIGNMENT'
      IN TYPEOF(ga)) ) | (NOT (SIZEOF(QUERY ( it <* ca.items | (
      NOT ((SIZEOF(TYPEOF(it) * [
      'PLANT_SPATIAL_CONFIGURATION.ELECTRICAL_SYSTEM',
      'PLANT_SPATIAL_CONFIGURATION.DUCTING_SYSTEM',

'PLANT_SPATIAL_CONFIGURATION.INSTRUMENTATION_AND_CONTROL_SYSTEM'
,
      'PLANT_SPATIAL_CONFIGURATION.PIPING_SYSTEM',
      'PLANT_SPATIAL_CONFIGURATION.PLANT',
      'PLANT_SPATIAL_CONFIGURATION.PLANT_ITEM_CONNECTOR',
      'PLANT_SPATIAL_CONFIGURATION.PIPING_COMPONENT_DEFINITION',
```

© ISO 2001 — All rights reserved

```
    'PLANT_SPATIAL_CONFIGURATION.STRUCTURAL_SYSTEM']) = 1) OR ((
    'PLANT_SPATIAL_CONFIGURATION.PRODUCT_DEFINITION' IN TYPEOF(
    it)) AND (SIZEOF(QUERY ( pc <* it.formation.of_product.
    frame_of_reference | (pc.discipline_type = 'process plant') ))
    = 1)))) )) = 0)) )) = 0;
END_ENTITY; -- externally_defined_classification
```

Figure K.3 shows the EXPRESS-G for the external classification.

K.5 Precedence of geometric descriptions

There are three principal methods for specifying the geometric shape of a plant item:

— explicit geometric representation;

— parametric representation;

— catalogue item identification.

A explicit geometric representation is the wireframe, b-rep, or csg geometry (or combination thereof) that is specified as the shape of a plant item. Parametric representation may be used for fittings. This representation specifies values for certain dimensional parameters of common fittings like elbows and reducers. A catalogue item identification uses neither explicit geometry or parametric values, but rather identifies a catalogue item that is commonly understood between partners in a data exchange. In an exchange using this part of ISO 10303, all three representations may be simultaneously used. This leads to a question of precedence among the representations, particularly if there is a conflict.

There is no absolute ordering with respect to which of these representations take precedence. Rather precedence depends on the use of the geometric representation. For example, for CAD display purposes, the explicit geometry, if present, should take precedence over the parametric representation or catalogue identification. Parametric representations should take precedence over explicit geometry when connectivity checks of mating conditions are performed.

In general, since a catalogue item identification would, presumably, identify a specific plant item design that is commonly understood between partners, the shape indicated or determined by the catalogue item identification, if present, should take precedence over the explicit geometry (since it subject to errors) and the parametric representation (because it is an approximate representation of the shape.)

K.6 Lines and line segments

The purpose of this part of ISO 10303 is not to exchange piping line information equivalent to that of a P&ID, but only that subset of information necessary for piping design. In this part of ISO 10303, piping lines specify the logical connectivity and some of the characteristics of process streams. The piping lines (piping_system_lines) are a network of logical nodes and arcs analogous to those found on a P&ID. Figure K.4 (a) illustrates piping lines as a network of nodes and arcs. These networks are purely logical and exist in the figure solely for the purpose of illustration. There are no geometric representations intended or implied.

 © ISO 2001 — All rights reserved

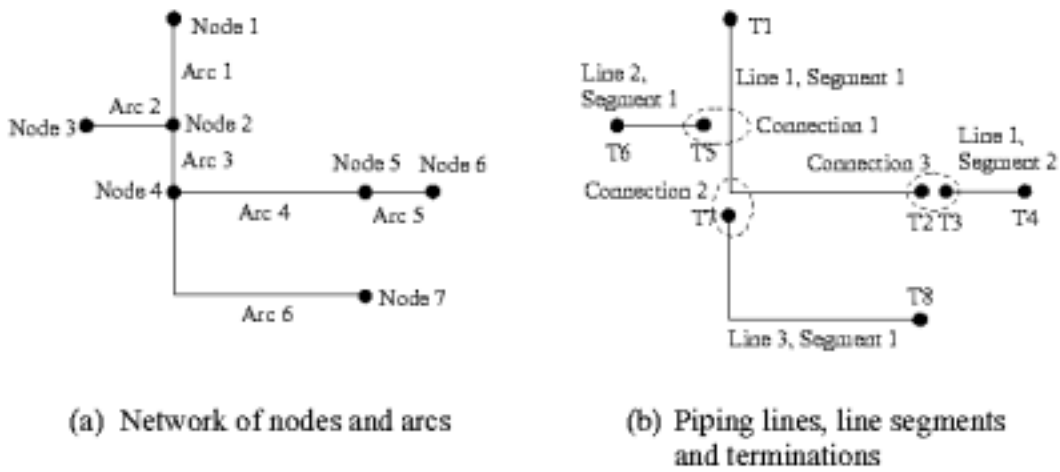

Figure K.4 - Piping line network

A piping system line, typically identified with a line number, is composed of a set of connected piping system line segments. Other piping system lines may branch from a given line, forming a piping network. In general, a piping system line segment is distinguished by the fact that the process stream has uniform characteristics over the length of the segment.

Nodes exist at:

— equipment inlets and outlets;

— line inlets and outlets (e.g., drains and vents);

— significant changes in the characteristics of the process stream;

— junctions.

Equipment and line inlets and outlets are natural nodes for a piping system line. A significant change in the characteristics of the process stream also merits a node. Reducers, for example, correspond to a single segment with nodes at each end.

Junctions are divergences or confluences of a single line. Branches are treated a little differently in this part of ISO 10303 when compared to ISO 10303-221 [3]. Since nodes represent a significant change in stream conditions, there many not be a node at a minor branch. In this case, the branch line segment connects to the main line at some point other than at a termination node. Figure K.4 (b) illustrates this. Line 2 and line 3 (each consisting of a single line segment) are branches from line 1. They are connected at line_branch_connections.

Figure K.4 (b) also illustrates connections between piping system line segments. The three dotted ellipses represent two kinds of connections. Each line segment has a pair of terminations. Line branch connections, as described above, are connections between a termination on a branch and the line segment that it branches from. Connections between line segments, as shown in connection 3, are two or more segment terminations.

© ISO 2001 — All rights reserved

Annex L
(informative)

Technical discussions

This annex provides discussions of certain technical aspects of this part of ISO 10303 for the purpose of clarifying those aspects.

NOTE The material in this annex differs from that in the Usage Guide, annex K, in that the purpose of the material here is to explain technical aspects of the design of this part of ISO 10303 that may be confusing or unclear as a result of the documentation format.

L.1 Fitting parameters and nominal size

The shape of fitting piping components may be defined parametrically in this part of ISO 10303. There are three aspects to this parametric definition:

— Fitting parameters;

— Connector parameters;

— Piping size description.

Fitting parameters are attributes of fitting application objects, such as an Elbow, defined in 4.2. An Elbow is defined by the attributes:

— centre_to_end_1_length;

— centre_to_end_2_length;

— centreline_radius;

— end_1_connector;

— end_2_connector;

— sweep_angle;

— type.

Centre_to_end_1_length, centre_to_end_2_length, centreline_radius, and sweep_angle are fitting parameters. End_1_connector and end_2_connector are connectors (or references to connectors) that have parameters of their own depending on the end type (e.g., socket, flange). Type is a label that classifies or describes the Elbow.

Each connector of the Elbow may have its own set of parameters. If one end of the Elbow was flanged, the parameters at the flanged end would be:

— flange_inside_diameter;

 © ISO 2001 — All rights reserved

— flange_outside_diameter;

— flange_thickness;

— raised_face_diameter;

— raised_face_height;

— ring_bottom_radius;

— ring_diameter;

— ring_width.

If the other end of the elbow was a socket, the parameters at the socket end would be:

— depth;

— hub_inside_diameter;

— hub_length;

— hub_outside_diameter.

For piping components, the specification of a nominal size is a very important and very common approach to specifying the shape of the component. This is done with the piping_size_description application object. The attributes for this object are:

— dimensional_standard;

— ovality_allowance.

The four kinds of piping size descriptions are inside_and_thickness, outside_and_thickness, pressure_class, and schedule. The attributes for the inside_and_thickness object are:

— inside_diameter;

— thickness.

The attributes for the outside_and_thickness object are:

— outside_diameter;

— thickness.

The attributes for the pressure_class object are:

— nominal_size;

— pressure_rating.

© ISO 2001 — All rights reserved

The attributes for the schedule object are:

— nominal_size;

— pipe_schedule.

All of the attributes of piping size description and the four kinds of piping size descriptions are parameters, except for dimensional standard and pipe schedule, that are references to documents. It is important to note that nominal size, as used in this part of ISO 10303, has the same meaning as the term used in process plant industry. It does not denote an actual dimension of a component (as does "outside diameter"), but rather is an approximation or description of the size of the component.

A piping size description may be applied to a piping component in its entirety or to an individual connector on a piping component. Therefore, conflicts may arise between the specification of a piping size description and the fitting or connector parameters. This part of ISO 10303 does not specify a precedence among these representations in the case of conflicts. Precedence needs to be resolved on a case-by-case or project-wide basis.

L.2 Value range, family definitions and range values

Dimensions, fitting parameters, and nominal sizes are typically associated with a single value.

EXAMPLE Single values for weld neck flange attributes are:

— hub through length: 5 inches
— hub weld point diameter: 3 inches
— flange inside diameter: 1.5 inches
— flange outside diameter: 8 inches
— flange thickness: 0.75 inches

There are occasions, however, when a family of parts needs to be described, such as in a piping specification.

EXAMPLE A range of values for the attributes of a family of weld neck flanges are:

— hub through length: 5 inches
— hub weld point diameter: 3 inches
— flange inside diameter: 1 to 2 inches
— flange outside diameter: 6 to 8 inches
— flange thickness: 0.75 to 1.25 inches

This part of ISO 10303 supports the specification of a range of values (i.e., a "value range") for a given dimension, parameter, or nominal size for the purpose of defining a family of parts. This is done by specifying two dimensional values for a given parameter. One dimension has a representation_item.name with a value of "minimum_<parameter name>" (e.g., "minimum_flange_inside_diameter") and the other has a representation_item.name with a value of "maximum_<parameter name>".

 © ISO 2001 — All rights reserved

A separate but related concept is the notion of range value. A range value, like the range of values, has a minimum and maximum value. It does not, however, indicate a family of parts. It indicates a parameter that may actually vary on the physical part. A range value is not a dimension that can vary within a prescribed tolerance.

EXAMPLE Insulation may be described as 6 inches thick, but in reality it may be 5-7 inches thick. Range values permit this to be specified.

In 4.2, the attributes that use range values are differentiated from the attributes that use value ranges by a explanatory note that follows the attribute definition.

L.3 Piping specifications

As noted in clause 1, this part of ISO 10303 is intended for the exchange of references to piping specifications, not the exchange of the specification itself. However, since piping specifications are important to piping design, some aspects of piping specifications are included. The piping_specification.owner is the individual or organization that is responsible for its content (either as a creator or maintainer). The piping_specification.name is whatever useful designation the owner applies to it. The piping_specification.piping_specification_id is a designation that differentiates one piping specification from another (see K.1).

Service limits are specified in piping_specification.service_description. This is simply a narrative explanation or description of the conditions that the piping specification is applicable under. It is not the role of the piping specification to fully explicate the stream conditions. If it is necessary to exchange this information, Stream_design_cases may be defined.

Piping specifications identify certain families of parts that can be used given the service limits. The family of parts is specified with a Plant_item_definition (or, more precisely, a Piping_component that is also a Plant_item_definition) that has a special property. The parameter values for the component may be specified as a range of values.

EXAMPLE A piping specification may specify a family of 90-degree elbows with a centreline radius of six inches and a nominal size of between one inch and three inches. Everything about the family is same except for the variation in the nominal size.

See L.6 for a complete explanation of value ranges.

L.4 Catalogues items and connectors

As noted in clause 1, this part of ISO 10303 is intended for the exchange of catalogue identifications, not the exchange of the catalogue itself. Catalogues play two roles in this part of ISO 10303:

— partial catalogue information may be exchanged. This information is limited to the identification of the catalogue and the definition of plant items contained in the catalogue. The definition of the plant items in the catalogue is exactly the same as the definition of a plant item as allowed by this part of ISO 10303.

— a plant item may be identified as being from or contained in a particular catalogue;

© ISO 2001 — All rights reserved

A catalogue may be an external, predefined catalogue or a user defined catalogue. See K for a complete explanation of how external, predefined catalogues are referenced.
Many design systems also use a catalogue-based approach for connectors. This part of ISO 10303 addresses this requirement with the application object Catalogue_connector. A Catalogue_connector behaves just like a Catalogue_item as described above. The exception is that since a connector (and, therefore, a Catalogue_connector) is a shape_aspect, a Catalogue_connector cannot be individually instanced within an exchange file. A Catalogue_connector definition may be exchanged independently, but any Catalogue_connector instance must be part of a plant item definition. It cannot be part of a plant item instance.

L.5 Pipe lengths

The representation of piping components within a piping design makes a distinction between two kinds of product_definitions: a physical Plant_item_definition and a Physical plant_item_instance. The definition is defined once and instantiated numerous times within a design at different locations to reduce duplication of information. This approach accommodates situations such as the repeated use of a pressure gauge at different locations in a design - one design, many usages.

In most piping designs, individual pieces of straight pipe of a given nominal size and material come in a large variety of lengths. Given the one design-many use approach, this would require that a definition and an instance be created for each pipe of differing length (since the length property of the pipe design shape differs). It is not practical to create Plant_item_definitions for each individual piece because everything about the pipe design is the same except for the length.

The use of this part of ISO 10303 permits two approaches for addressing this situation. The first is that the Plant_item_definition may be defined without specifying a length attribute. In this case, the length of the pipe would be associated with the Plant_item_instance product_definition. In this approach, all the information about the pipe - material, insulation, nominal size (a shape property) - would be associated with the Plant_item_definition product_definition. The shape property of the instance would be represented by (i.e., have representation_items of) the mapped shape of the Plant_item_definition (see discussion of mapped_item) and the parameter end_to_end_length.

The second approach is similar to the first, but specifies descriptive_representation_item with the attribute description assigned a value of "as required", rather than specifying an end_to_end_length. This completely eliminates the need to specify a length and permits the pipe to be "cut to fit" at the plant site.

L.6 Logical connectivity and relationship to physical design

Piping lines and line segments represent the logical connectivity of the process streams and equipment. This is part of a functional design in that the functional capability of the piping system is partially represented by the connectivity of the piping lines and (functional) plant items. The complete representation of the functional capabilities of the piping system is outside the scope of this part of ISO 10303. ISO 10303-221 [3] may be used to represent the complete functionality of the piping system.

 © ISO 2001 — All rights reserved

The physical design of the piping is associated with the functional design of the piping lines through line_piping_system_component_assignment. This association links an element of the physical design (an instance, not a definition), such as a valve, to a Piping_system_line_segment. This association says "this piping component is on this line". Therefore, one or more piping components may be considered as being "on" a piping line.

Since physical piping components may be connected to form piping runs or piping assemblies, two kinds of connectivity can exist within a usage of this part of ISO 10303: logical connectivity represented by piping system lines and physical connectivity represented by plant item connections. In general, the only points where logical connections correspond to physical connections are where the line terminates at a piece of equipment. This is due to the fact that lines may end at equipment (by definition) and equipment connectors establish connections with piping components. Most physical connections, however, do not correspond to logical connections. Figure L.1 illustrates the relationship between the piping line segments, connectivity between line segments, physical components, and the connectivity between physical components.

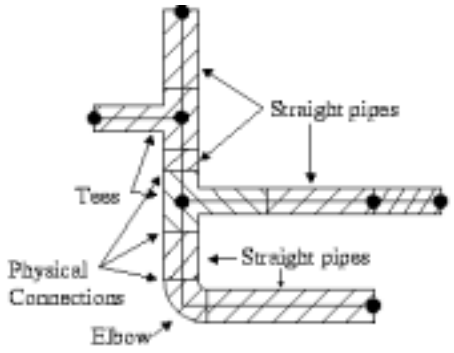

Figure L.1 - Relationship between logical connectivity and physical connectivity

© ISO 2001 — All rights reserved

Bibliography

[1] *Federal Information Processing Standards Publication 183, Integration Definition for Function Modeling (IDEF0)*, FIPS PUB 183, National Institute of Standards and Technology, December 1993.

[2] *Federal Information Processing Standards Publication 184, Integration Definition for Information Modeling (IDEF1X)*, FIPS PUB 184, National Institute of Standards and Technology, December 1993.

[3] ISO 10303-221, *Functional Data and their Schematic Representation for Process Plant*, TC184/SC4/WG3/N559, 23 February 1997.

[4] *Cast Iron Pipe Flanges and Flanged Fittings*, NSI B16.1, American National Standards Institute, 1989.

[5] *Pipe Flanges and Flanged Fittings*, ANSI B16.5, American National Standards Institute, 1988.

[6] *Welded and Seamless Wrought Steel Pipe*, ANSI B36.10, American National Standards Institute, 1985.

[7] *Stainless Steel Pipe*, ANSI B36.19, American National Standards Institute, 1985.

[8] *The Piping Guide for the Design and Drafting of Industrial Piping Systems*, Sherwood, David R., Whistance, Dennis J., Syentek Books Company, Inc., 1991.

[9] *Piping Handbook*, Nayyar, Mohinder L., McGraw-Hill, Inc., Sixth Edition, 1992.

[10] *Guidelines on Terminology for Valves and Fittings*, MSS SP-96, Manufacturers Standardization Society of the Valve and Fittings Industry, Inc., 1991.

[11] ISO TC184/SC4/WG3/N582, *Application Protocol 227 Validation Report Version 1.1*, 21 March 1997.

[12] *Process Engineering Data: Process Design and Process Specifications of Major Equipment*, ISO 10303-231, Group 1 Version, 3 September 1996.

[13] ISO 13584, *Industrial automation systems and integration — Parts Library*

[14] Hoffman-Wellenhof, B., Lichtenegger, H., and Collins, J., *Global Positioning System - Theory and Practise*, Third Edition, Springer-Verrlag Wien, New York, 1994.

[15] NSRP 0424, Usage Guide for ISO 10303-227 for Ship Piping Systems Version 3.0, 1 October 2000.

 © ISO 2001 — All rights reserved