Predictive Analytics for Smart Manufacturing

Ronay Ak

Systems Integration Division

NIST
National Institute of Standards and Technology
U.S. Department of Commerce

NIST Research & Standards Focus

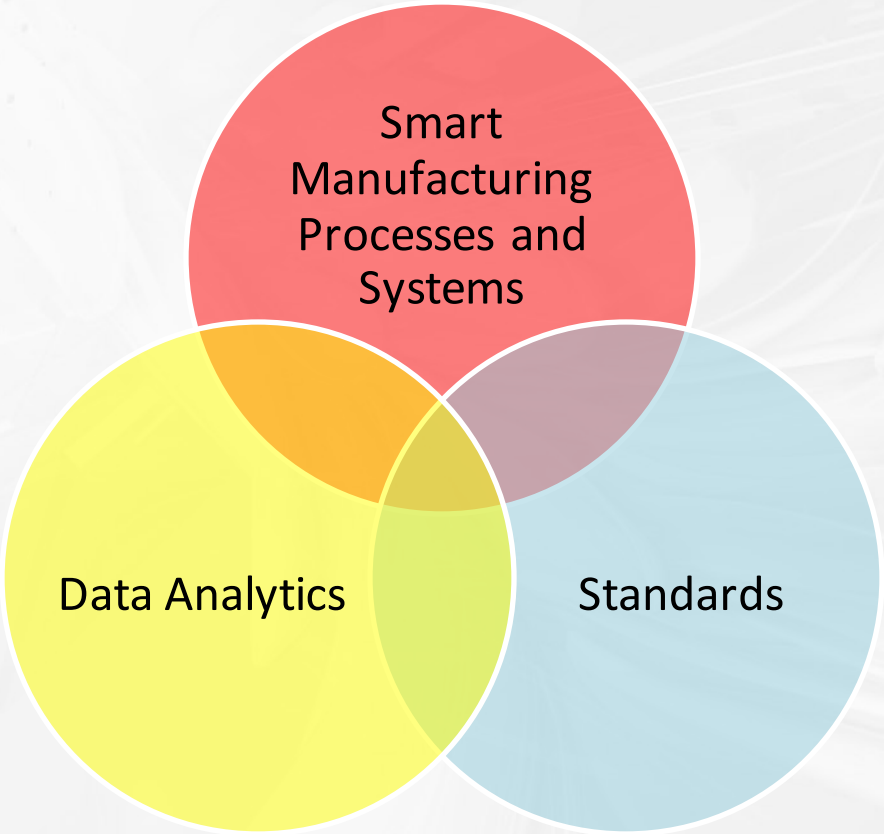

How Can Data Analytics Improve Manufacturing?

From data to insight

DATA

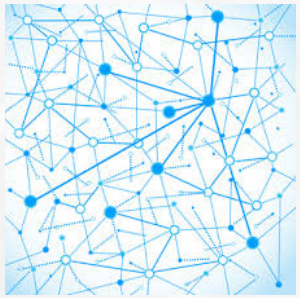

INFORMATION

KNOWLEDGE

INSIGHT

Data-driven applications in PLM

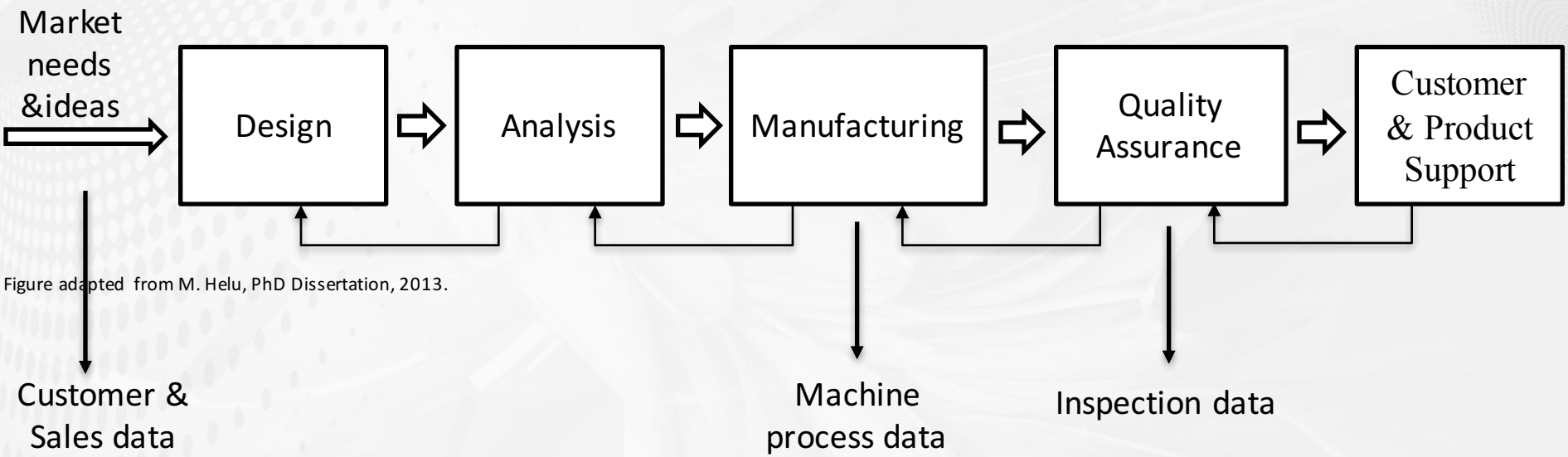

Figure adapted from M. Helu, PhD Dissertation, 2013.

The goal is how to use the data to make the connections between the different stages of the pipeline and share knowledge across PLM pipeline in a timely manner.

Data Analytics Capabilities

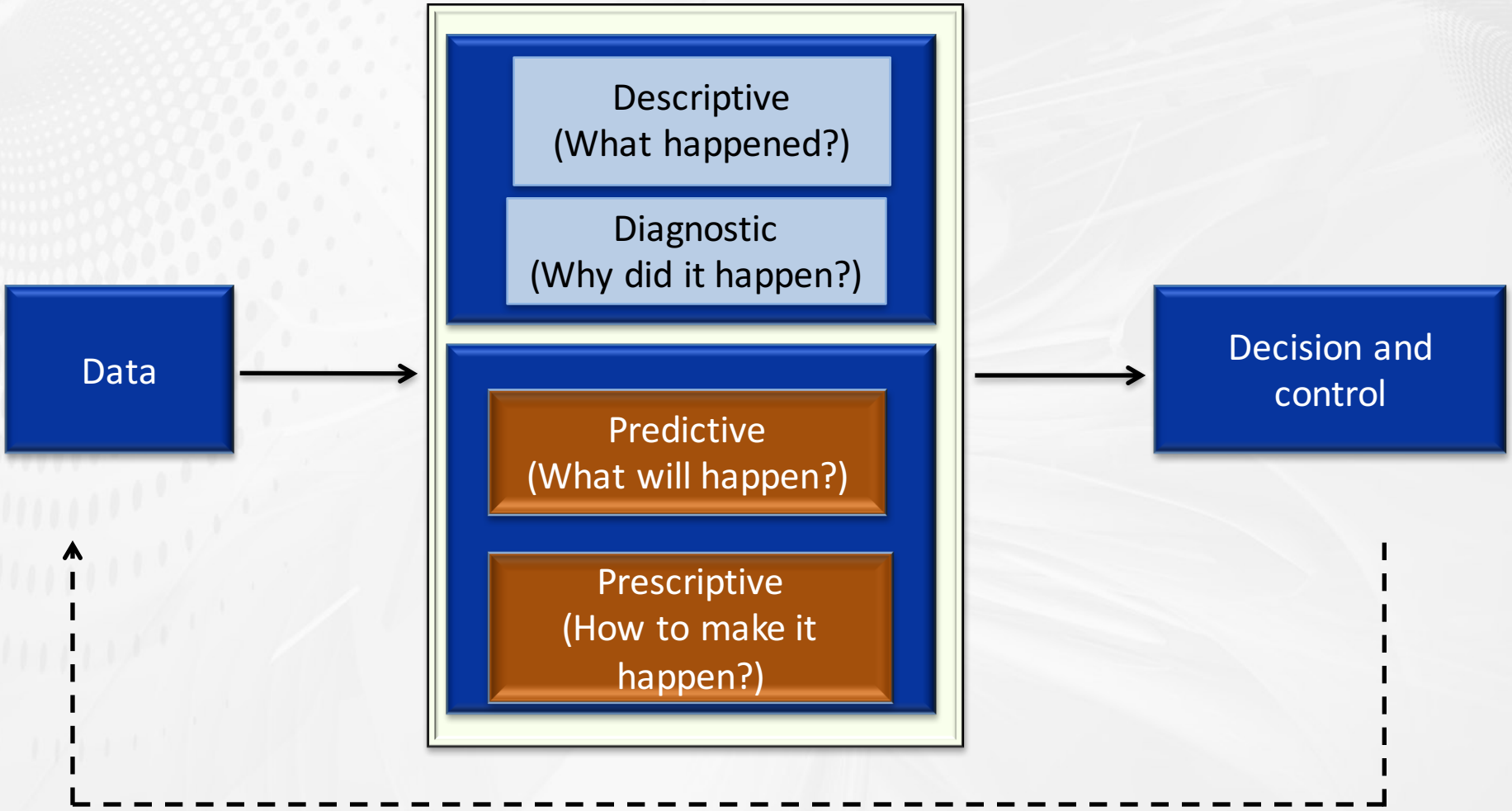

Building & Using Prediction Models

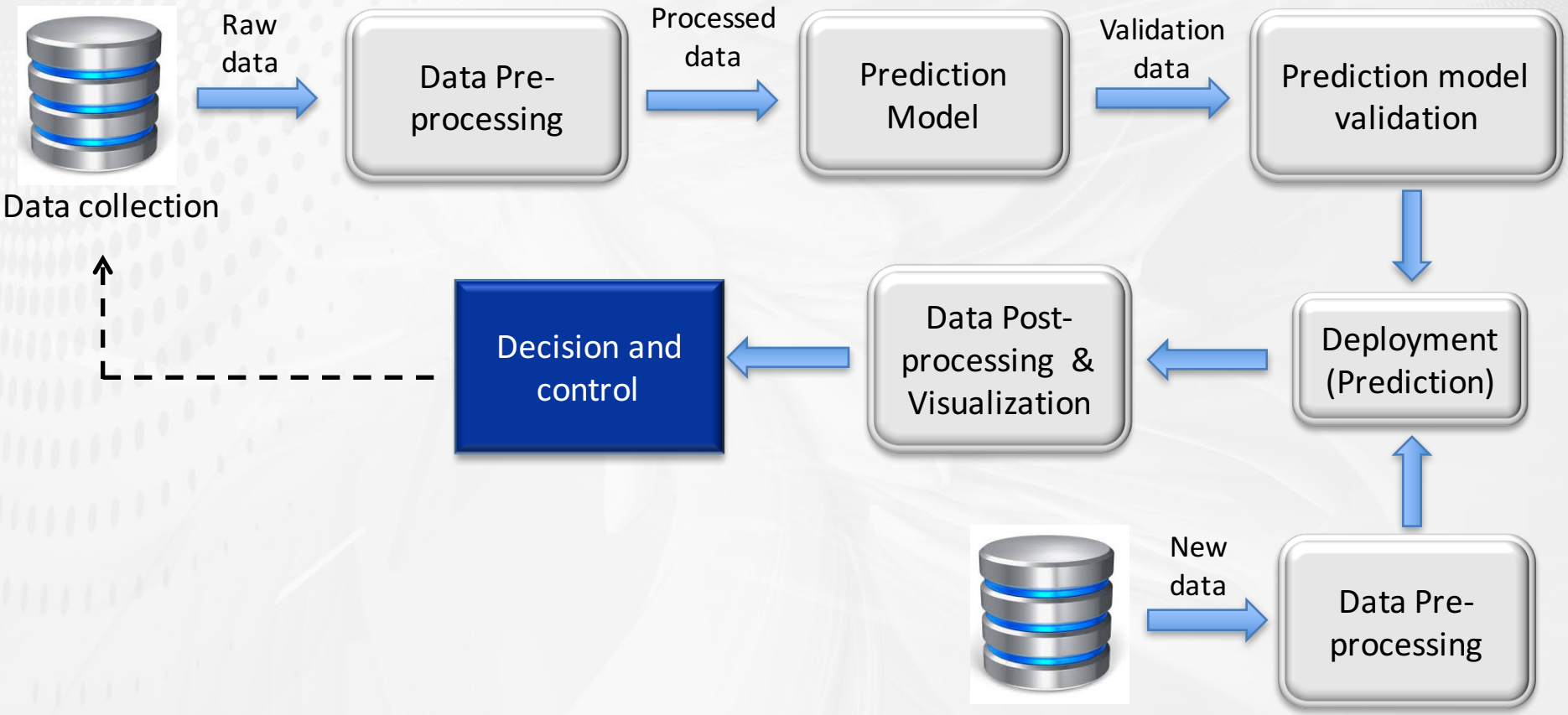

Illustrative Example: Data-driven Energy Consumption Prediction

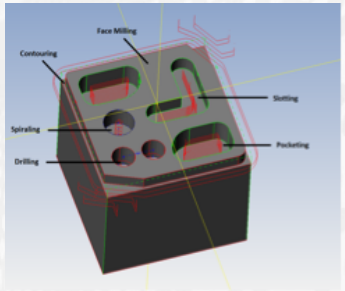

Part design

```
%
N0010 G40 G17 G90 G70
N0020 G91 G28 Z0.0
:0030 T00 M06
N0040 G0 G90 X2.1145 Y1.9084 S0 M03
N0050 G43 Z.1181 H00
N0060 G3 X2.4256 Y1.8592 Z-.0295 I.1516 J-.0492 K.
N0070 G1 Y1.9408 M08
N0080 G2 X1.6546 Y2.4233 I-.2503 J.4574
N0090 X1.5648 Y2.4228 I-.0673 J4.0218
N0100 X1.5127 Y2.3259 I-.4007 J.1531
N0110 Y1.4139 I-.2526 J-.456
N0120 X1.5658 Y1.3148 I-.3498 J-.251
N0130 G1 X1.6546
N0140 X1.6545 Y1.316
N0150 X1.6544 Y1.3184
N0160 X1.6543 Y1.3208
N0170 G2 X2.4256 Y1.7998 I.5218 J.0203
```

NC code

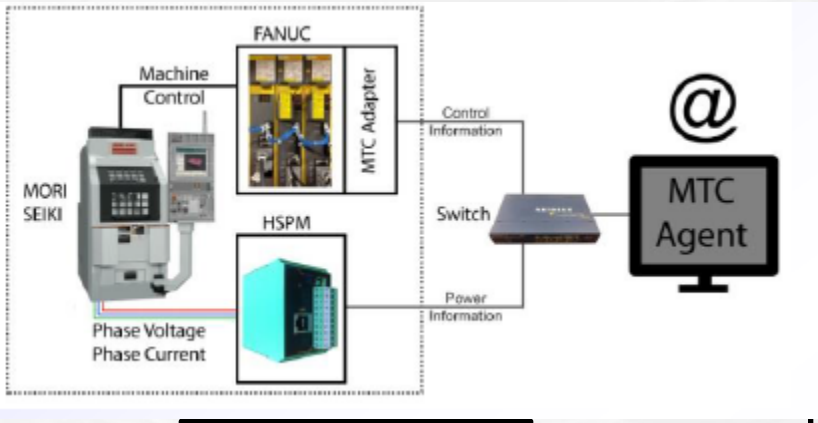

Target machine

Machined part

Machine tool controller data		Data from external devices
• Feed rate • Spindle speed • Machine position	• Depth of cut • Cutting direction • Cutting strategy	• Power demand • Temperature, etc. • …

Energy Consumption Prediction

Building the Prediction Model

- Data filtering
- Input parameters selection
- Data transformation

n machine parameters

	x_1	x_2	$\cdots$	x_n	y
m NC code blocks	x_1^1	x_2^1	$\cdots$	x_n^1	y^1
	x_1^2	x_2^2	$\cdots$	x_n^2	y^2
	$\vdots$	$\vdots$		$\vdots$	$\vdots$
	x_1^m	x_2^m	$\cdots$	x_n^m	y^m

Energy density

Input data

Energy Consumption Prediction Model

Using the Prediction Model

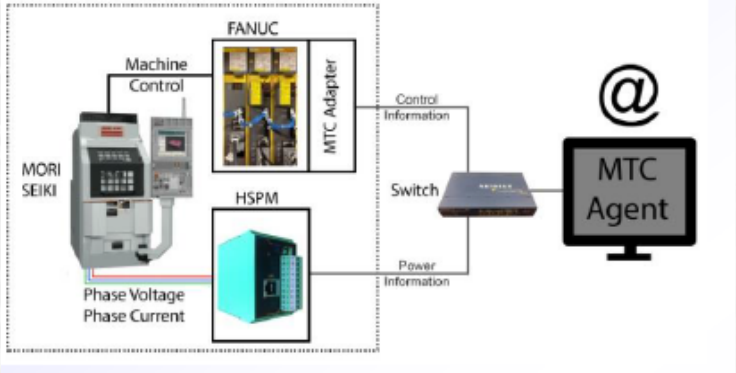

New data

Energy Consumption Prediction Model

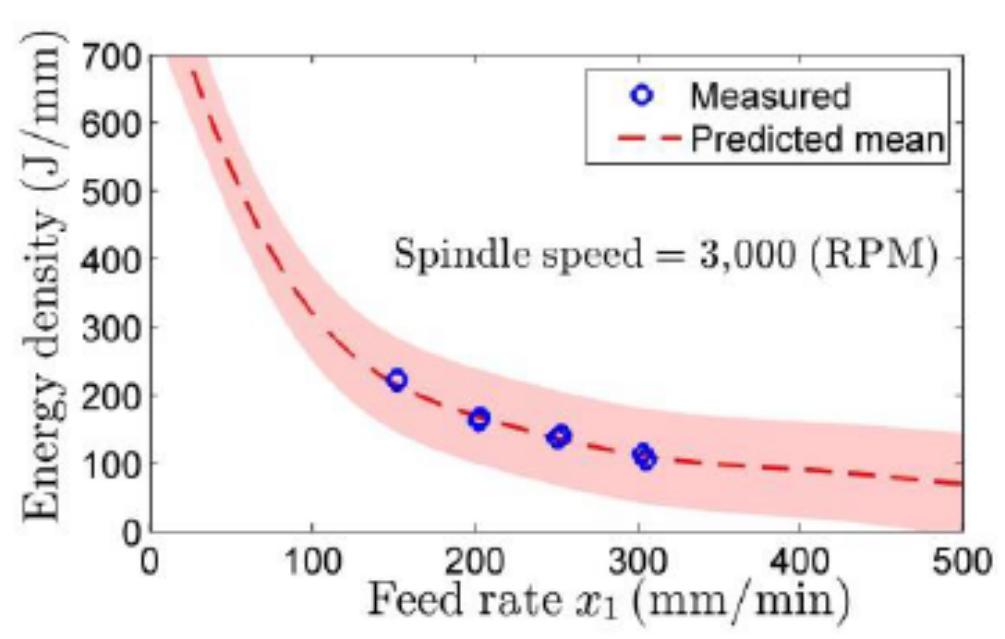
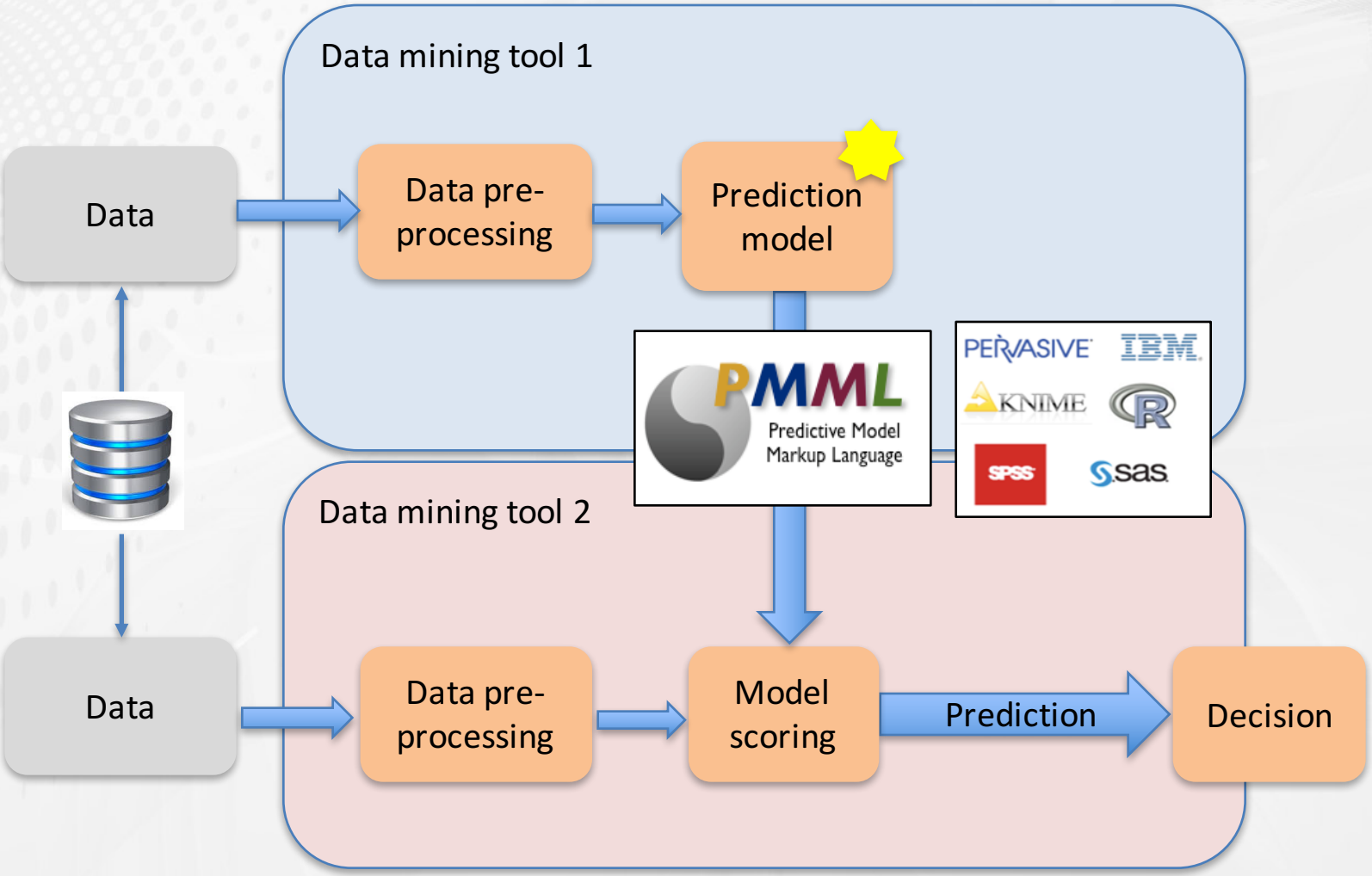
PMML is a Language to Represent Prediction Models