The Ideal Gas Thermodynamics of Diesel Fuel Ingredients. I. Naphthalene Derivatives and Their Radicals

Henry Curran, Christine Wu, Nick Marinov, William J. Pitz, and Charles. K. Westbrook
Lawrence Livermore National Laboratories, Livermore, California 94550

Alexander Burcat[a)]
Faculty of Aerospace Engineering. Technion-Israel Institute of Technology, Haifa 32000. Israel

Received January 6, 1999; final manuscript received February 29, 2000

The molecular fundamentals of 21 naphthalene derivatives were investigated, calculated and evaluated, and their ideal gas thermodynamic properties were calculated, for the sake of simulating the combustion properties of diesel fuel. Ten of these species are stable molecules and 11 are radicals. The molecular fundamentals are calculated using Gaussian 94 *ab initio* and MOPAC 6 semiempirical programs. The results can be used to estimate the MOPAC performance with polyaromatic species. © *2000 American Institute of Physics.* [S0047-2689(00)00303-2]

Key words: *ab initio* calculations; naphthalenic compounds; thermodynamics.

Contents

1. Introduction. 464
   1.1. Stable Molecules. 465
   1.2. Radicals. 465
   1.3. Structure. 465
   1.4. Choice of Isomers. 465
2. Calculations. 466
3. The Individual Substances. 469
   3.1. Naphthalene: $C_{10}H_8$. 469
   3.2. 1-Naphthyl Radical: $C_{10}H_7\cdot$. 469
   3.3. 1,2-Naphthyne: $C_{10}H_6$. 469
   3.4. 1,2-Dihydro-Naphthalene: 1,2-$C_{10}H_{10}$. 471
   3.5. 2-Hydro-Naphthalene Radical: 2-$C_{10}H_9\cdot$. 471
   3.6. 1-Methyl-Naphthalene: 1-$C_{10}H_7CH_3$. 471
   3.7. 1-Naphthyl-Methyl Radical: $C_{10}H_7CH_2\cdot$. 475
   3.8. 1-Ethyl-Naphthalene: $C_{10}H_7C_2H_5$. 475
   3.9. 1-Naphthalene α-Ethyl-Radical: $C_{10}H_7CH_2$-$CH_2\cdot$. 479
   3.10. 1-Naphthalene β-Ethyl Radical: $C_{10}H_7C\cdot H$-CH_3. 483
   3.11. 1-Vinyl-Naphthalene: $C_{10}H_7CH{=}CH_2$. 487
   3.12. 1-Vinyl-Naphthalene α-Radical: $C_{10}H_7CH{=}CH\cdot$. 492
   3.13. 1-Naphthalene-β-Vinyl Radical: $C_{10}H_7C\cdot{=}CH_2$. 492
   3.14. 1-Ethynyl Naphthalene: $C_{10}H_7C_2H$. 492
   3.15. 1-Ethynyl Naphthalene Radical: $C_{10}H_7C{\equiv}C\cdot$. 492
   3.16. 1-Naphthol: $C_{10}H_7OH$. 492
   3.17. 1-Naphthoxy Radical: $C_{10}H_7O\cdot$. 496
   3.18. 1-Ethanol Naphthalene: $C_{10}H_7C_2H_4OH$. . . . 496
   3.19. 1-Naphthaldehyde: $C_{10}H_7CHO$. 496
   3.20. 1-Naphthaldehyde Radical: $C_{10}H_7C\cdot O$. 503
   3.21. 4-Ethenyl-Phenyl-1-Vinyl: $C_6H_4C_2H(C_2H_2\cdot)$. 503
4. Discussion. 503
   4.1 Fundamental Vibrations. 503
   4.2 IR Spectrum. 503
   4.3 Enthalpies of Formation. 505
   4.4 MOPAC Calculations. 511
   4.5 Accuracy of Calculations. 513
5. Conclusions. 515
6. References. 516

List of Tables

1. Interatomic distances in Å and configuration of species as calculated by the MOPAC program. 469
2. Internal rotation values for different benzene species. 469
3. Fundamental vibrations, moments of inertia, and enthalpies of formation of naphthalene. 470
4. Thermodynamic properties of $C_{10}H_8$ naphthalene. 472
5. Fundamental vibrations, moments of inertia, and enthalpies of formation of the 1-naphthyl radical. 473
6. Thermodynamic properties of $C_{10}H_7\cdot$ naphthyl radical. 474
7. Fundamental vibrations, moments of inertia, and enthalpies of formation for naphthyne. 475
8. Thermodynamic properties of $C_{10}H_6$ naphthyne... 476
9. Fundamental vibrations, moments of inertia, and enthalpies of formation for the $C_{10}H_{10}$ 1,2-dihydro-naphthalene. 477
10. Thermodynamic properties of $C_{10}H_{10}$ 1,2-dihydro-naphthalene. 478
11. Fundamental vibrations, moments of inertia, and enthalpies of formation for the α-$C_{10}H_9\cdot$ 2-hydro-naphthalene radical. 479

[a)]Electronic mail: aer0201@tx.technion.ac.il

12. Thermodynamic properties of the α-$C_{10}H_9\cdot$ 2-hydro-naphthalene radical. 480
13. Fundamental vibrations, moments of inertia and enthalpies of formation for 1-$C_{10}H_7CH_3$ methyl-naphthalene. 481
14. Thermodynamic properties of 1-$C_{10}H_7CH_3$ 1-methyl-naphthalene. 482
15. Fundamental vibrations, moments of inertia, and enthalpies of formation for the $C_{10}H_7CH_2\cdot$ 1-naphthyl-methyl radical. 483
16. Thermodynamic properties of the 1-$C_{10}H_7CH_2\cdot$ 1-naphthyl methyl radical. 484
17. Fundamental vibrations, moments of inertia, and enthalpies of formation for 1-ethyl naphthalene... 485
18. Thermodynamic properties of 1-$C_{10}H_7CH_2CH_3$ . . . .1-ethyl. naphthalene. 486
19. Fundamental vibrations, moments of inertia, and enthalpies of formation for the $C_{10}H_7CH_2$-$CH_2\cdot$ α-ethyl-1-naphthalene radical. 487
20. Thermodynamic properties of the 1-$C_{10}H_7CH_2CH_2\cdot$ α-ethyl-1-naphthalene radical.. 488
21. Fundamental vibrations, moments of inertia, and enthalpies of formation for the $C_{10}H_7C\cdot H-CH_3$ β-ethyl-1-naphthalene radical. 489
22. Thermodynamic properties of the 1-$C_{10}H_7CH\cdot CH_3$ β-ethyl-1-naphthalene radical... 490
23. Fundamental vibrations, moments of inertia, and enthalpies of formation for $C_{10}H_7CH=CH_2$ vinyl-1-naphthalene. 491
24. Thermodynamic properties of 1-$C_{10}H_7CH=CH_2$ vinyl 1-naphthalene. 493
25. Fundamental vibrations, moments of inertia, and enthalpies of formation for the $C_{10}H_7CH=CH\cdot$ α-vinyl trans-1-naphthyl radical. 494
26. Thermodynamic properties of the 1-$C_{10}H_7CH=CH\cdot$ 1-naphthyl α-vinyl radical..... 495
27. Fundamental vibrations, moments of inertia, and enthalpies of formation for the $C_{10}H_7C\cdot-CH_2$ β-vinyl 1-naphthyl radical. 496
28. Thermodynamic properties of the $C_{10}H_7C\cdot=CH_2$ 1, β-vinyl 1-naphthyl radical. 497
29. Fundamental vibrations, moments of inertia, and enthalpies of formation for $C_{10}H_7C\equiv CH$ 1-ethynyl naphthalene. 498
30. Thermodynamic properties of $C_{10}H_7C\equiv CH$ 1-ethynyl naphthalene. 499
31. Fundamental vibrations, moments of inertia, and enthalpies of formation for the $C_{10}H_7C\equiv C\cdot$ ethynyl 1-naphthalene radical. 500
32. Thermodynamic properties of the $C_{10}H_7C\equiv C\cdot$ ethynyl 1-naphthalene radical. 501
33. Fundamental vibrations, moments of inertia, and enthalpies of formation for $C_{10}H_7OH$ 1-naphthol. 502
34. Thermodynamic properties of $C_{10}H_7OH$ 1-naphthol. 503
35. Fundamental vibrations, moments of inertia, and enthalpies of formation for the $C_{10}H_7O\cdot$ 1-naphthoxy radical. 505
36. Thermodynamic properties of the $C_{10}H_7O\cdot$ naphthoxy radical. 506
37. Fundamental vibrations, moments of inertia, and enthalpies of formation for $C_{10}H_7C_2H_4OH$ 1-ethanol naphthalene. 507
38. Thermodynamic properties of $C_{10}H_7CH_2CH_2OH$ 1-naphthyl-ethanol. 508
39. Fundamental vibrations, moments of inertia, and enthalpies of formation for $C_{10}H_7CHO$ 1-naphth-aldehyde. 509
40. Thermodynamic properties of $C_{10}H_7CHO$ naphthaldehyde. 510
41. Fundamental vibrations, moments of inertia, and enthalpies of formation for the $C_{10}H_7C\cdot O$, 1-naphth-aldehyde radical. 511
42. Thermodynamic properties of the $C_{10}H_7C\cdot O$ naphthaldehyde radical. 512
43. Fundamental vibrations, moments of inertia, and enthalpies of formation for the $C_6H_4C_2H(C_2H_2\cdot)$ 4-ethenyl-phenyl-1-vinyl radical. 513
44. Thermodynamic properties of the $C_6H_4C_2H(C_2H_2\cdot)$ 4-ethenyl-phenyl-1-vinyl radical. 514
45. Listed values of the enthalpy of formation at 298 K for naphthalene species in kcal/mole..... 515
46. Comparison of the thermodynamic data with the literature. 516

1. Introduction

Methyl naphthalene and n-decane have been assigned as two ingredients that together can simulate the chemical consistency of diesel fuel for combustion kinetic modeling purposes.[38] In the past, methyl naphthalene has been a primary reference for diesel fuel and assigned a cetane number of zero. Primary reference fuels are used to rate the ignition properties of diesel fuel. Although methyl naphthalene's abundance in diesel fuel is only 1%–2%, so are all the other fuel ingredients, and among the 60–70 main compounds included in this blend, only very few have higher concentrations. Thus, the act of choosing methyl naphthalene as one of two chemicals to represent diesel fuel is to some extent arbitrary.

The thermodynamic properties of many of the naphthalene derivatives necessary for the combustion kinetic modeling are unknown. It was therefore undertaken in this study to investigate the thermodynamic properties of the following species:

Naphthalene: $C_{10}H_8$,
1-naphthyl radical: $C_{10}H_7\cdot$,
Naphthyne: $C_{10}H_6$,
1,2 dihydro-naphthalene: $C_{10}H_{10}$,
1-hydro naphthalene radical: $C_{10}H_9\cdot$,
1-methyl naphthalene: $C_{10}H_7CH_3$,

1-methyl naphthyl radical: $C_{10}H_7CH_2\cdot$,
1-ethyl naphthalene: $C_{10}H_7C_2H_5$,
α-ethyl naphthyl radical: $C_{10}H_7CH_2CH_2\cdot$
β-ethyl naphthyl radical: $C_{10}H_7CH\cdot CH_3$,
1-vinyl naphthalene: $C_{10}H_7C_2H_3$,
α-vinyl naphthyl radical: $C_{10}H_7CH{=}CH\cdot$ *trans*,
β-vinyl naphthyl radical: $C_{10}H_7C\cdot{=}CH_2$,
1-ethynyl naphthalene: $C_{10}H_7C_2H$,
1-ethynyl naphthalene radical: $C_{10}H_7C_2\cdot$,
1-naphthol: $C_{10}H_7OH$,
1-naphthoxy radical: $C_{10}H_7O\cdot$,
1-naphthyl ethanol: $C_{10}H_7C_2H_4OH$,
1-naphthaldehyde: $C_{10}H_7CHO$,
1-naphthaldehyde radical: $C_{10}H_7C\cdot{=}O$,
4-ethynyl-phenyl-1-vinyl radical: $HC{\equiv}C\text{-}C_6H_4\text{-}CH{=}CH\cdot$.

Naphthalene, methyl naphthalene, and ethyl naphthalene have been calculated by Pitzer and co-workers;[33] and then recalculated by Stull *et al.*,[46] The fundamental properties of naphthalene have been calculated from experimental vibrations by Chen *et al.*[12] and calculated by Melius[31] and by Wang and Frenklach.[47,48] The naphthyl radical was calculated by Marinov *et al.*,[28] Melius,[31] and Wang and Frenklach,[48] naphthol was calculated by Kudchadker *et al.*,[24] naphthol and the naphthoxy radical were estimated, using Benson's group values, by Marinov *et al.*,[28] dihydronaphthalene was calculated by Dorofeeva and Gurvich[19] and naphthyne, dihydro naphthalene, the vinyl naphthyl radical as well as the 4-ethynyl-phenyl-1-vinyl radical by Wang and Frenklach.[48]

In the past, *ab initio* methods were by far more accurate than semiempirical ones, but lately the difference between the two has been narrowed, and the semiempirical methods of today are almost as good as the *ab initio* ones regarding the optimization of a molecule's structure and the estimation of its vibrations. However the estimation of the enthalpies of formation are still unacceptable by semiempirical methods.

In this article the fundamental vibrations, the bond lengths and the moments of inertia of all the molecules were calculated using MOPAC 6[44] semiempirical methods, PM3 (parameter method 3), AM1 (Austin method 1), and AM1/UHF as well as the Gaussian 94[21] *ab initio* method. Calculations were performed with Gaussian, gradient corrected density functional theory (DFT). Two exchange and correlation functionals were used in the DFT, BPW91 and the older BP86 with the D95V and 6-31G(d,p) basis sets, respectively. The results have been compared to each other, to existing experimental or *ab initio* calculations, or to infrared (IR) spectra published in the National Institute of Standards and Technology (NIST) 1997 WebBook.[1] The MOPAC and Gaussian methods were used to obtain data where experimental ones were not available or in order to compare them against the experimental evidence.

The enthalpies of formation were treated in each case separately as reported below. Finally, our recommendations were made and the thermodynamic tables were calculated accordingly.

Generally, Gaussian *ab initio* calculations are widely accepted as trustworthy methods. At the same time, it is known that these calculations are hard to perform and extremely time consuming on big molecules like naphthalene derivatives.

On the other hand, MOPAC calculations, while less accurate theoretically, provide very similar results to the Gaussian ones, in only a fraction of the time.

Our discussion distinguishes between stable molecules on one hand and radicals on the other.

1.1. Stable Molecules

Stable molecular are easier to calculate. All the electrons in these molecules are paired, and therefore calculating restricted Hartree–Fock (RHF) conditions and unrestricted Hartree–Fock (UHF) for the same semiempirical method, PM3 or AM1, should give the same result. Thus the spin contamination should be zero. All deviations imply higher uncertainties of the calculated data. The AM1 method is supposedly better adjusted for compounds including only carbon and hydrogen, while PM3 is better adjusted to handle molecules including oxygen as well.[45] Neither AM1 nor PM3 was adjusted for polyaromatic molecules.[43] Therefore the enclosed data can be used for evaluating the two methods for naphthalene derivatives.

1.2. Radicals

All the radicals have unpaired electrons and therefore the calculations may have spin contamination. The spin contamination is listed in the UHF calculations if it differs from $S^2 = 0.75$.[45] This is another source of inconsistency in the results.

1.3. Structure

In Table 1, the structural formula and the bond length of each species are given, as found by the MOPAC semiempirical methods.

1.4. Choice of Isomers

As was stated by Alberty and Bloomstein,[2] the equilibrium abundance of 1-methyl naphthalene and 2-methyl naphthalene is approximately 1/3 and 2/3, respectively, at room temperature and reaches equal abundance above 1000 K.

At the same time the abundance of 1-ethyl naphthalene and 2-ethyl naphthalene is equal at all temperatures. From all the data gathered,[2,31,33,46] it is clear that the differences in the thermodynamic values of two different isomers (1-naphthyl radical and 2-naphthyl radical, 1-methyl naphthalene and 2-methyl naphthalene) are between a quarter to a half of the $\pm$ error value of the thermodynamic calculation, i.e., ± 0.2 kcal/mol at 298 K. It was found, therefore, that it is completely unnecessary to calculate separate values for the different isomers. The present isomers although calculated for the 1 or α position can be used with confidence for the 2 or β position as well.

TABLE 1. Interatomic distances in Å and configuration of species as calculated by the MOPAC program.

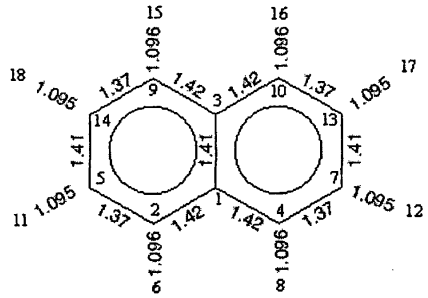

Naphthalene

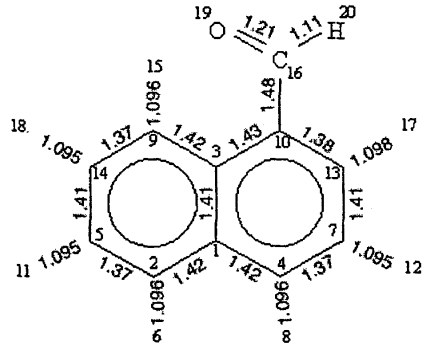

1,Naphthaldehyde

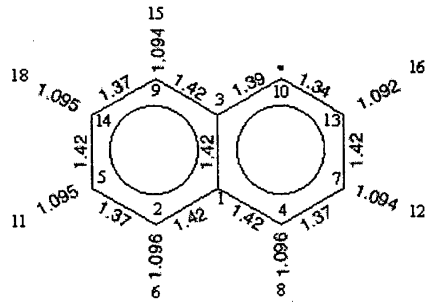

Naphtyl Radical

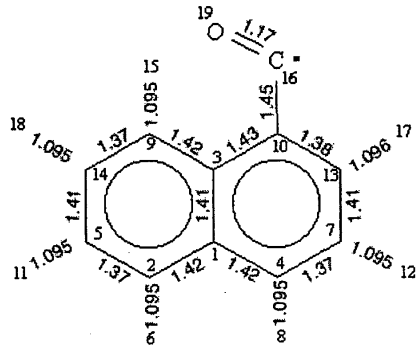

1,Naphthaldehyde Radical

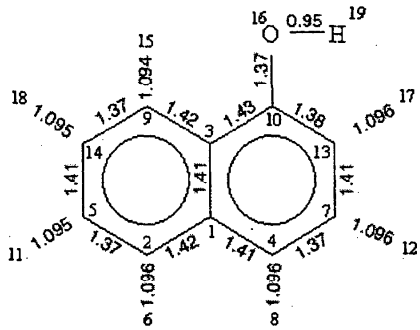

Naphthol

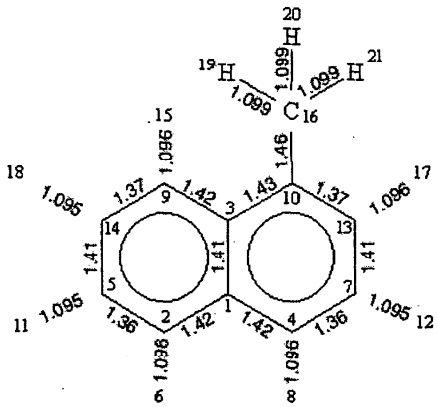

1-Methyl-Naphtalene

2. Calculations

The thermodynamic calculations were made with the McBride and Gordon[29] PAC97 thermodynamic program using the rigid rotor harmonic oscillator (RRHO) approximation. This method uses fundamental vibrations, moments of inertia, enthalpies of formation at 298 K and internal rotation values if pertinent. Where needed, the calculated fundamentals were supplemented with internal rotation information taken from benzene like molecules because the parallel naphthalene data were not available, or because they were difficult to calculate. The results of the calculations are presented

TABLE 1. Interatomic distances in Å and configuration of species as calculated by the MOPAC program—Continued.

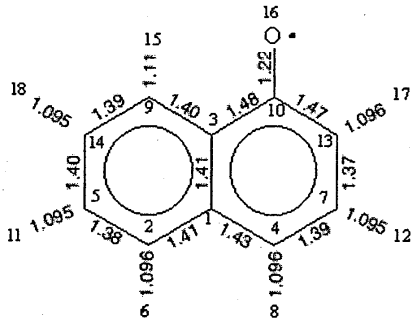

Naphtoxy Radical

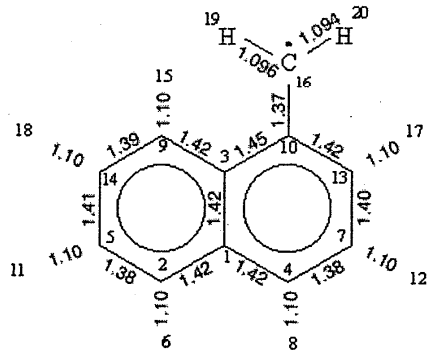

1,Methyl Naphthalene Radical

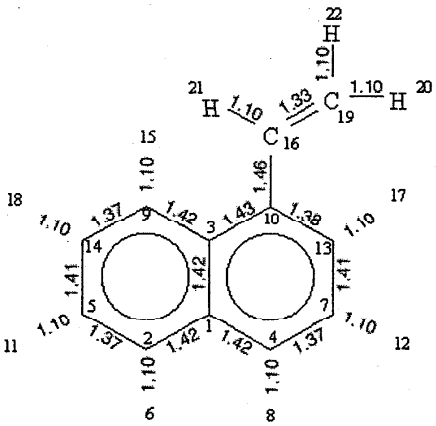

1, Vinyl Naphthalene

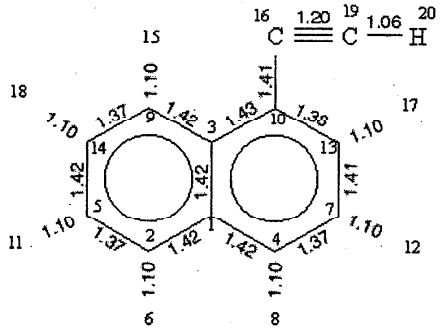

1, Ethynyl Naphthalene

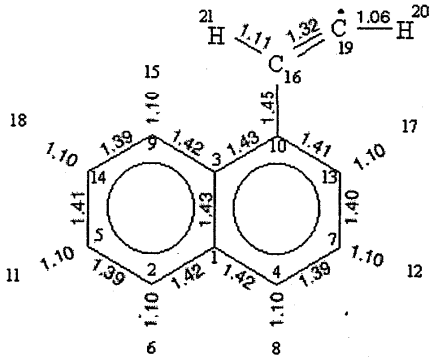

1,Vinyl Naphthalene α-Radical

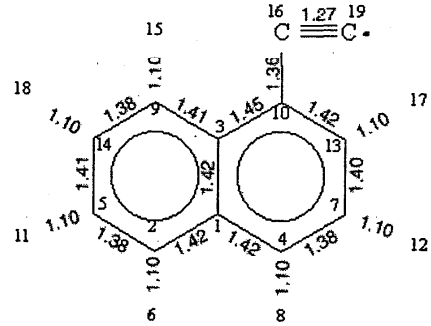

1,Ethynyl Naphthalene Radical

for each species in a table for the following properties: C_p, the heat capacity, H_T-H_{298} the enthalpy, S the entropy, $-(G_T-H_{298})/T$, H_T the absolute enthalpy, $\Delta_f H(T)$ the enthalpy of formation, and $\log K_p$ the equilibrium of formation constant from reference elements which are presented as functions of T. H_T is a function used in engineering and is equal to

$$H_T=\Delta H_{298}+(H_T-H_{298}).$$

In each case, the experimental inputs, if available, were preferred. Thus, in the case of naphthalene the widely accredited experimental assignment of Chen *et al.*[12] was checked and compared to the IR experimental reading. In the rest of the cases, the IR spectrum was used and the missing vibrations

TABLE 1. Interatomic distances in Å and configuration of species as calculated by the MOPAC program—Continued

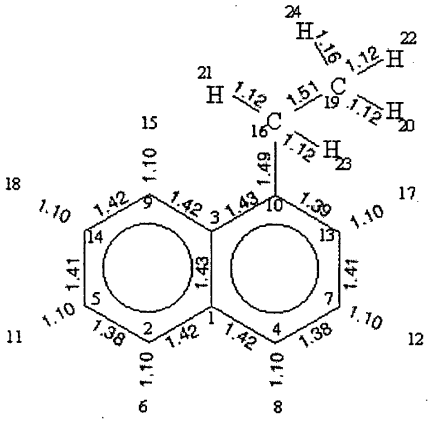

1,Ethyl Naphthalene

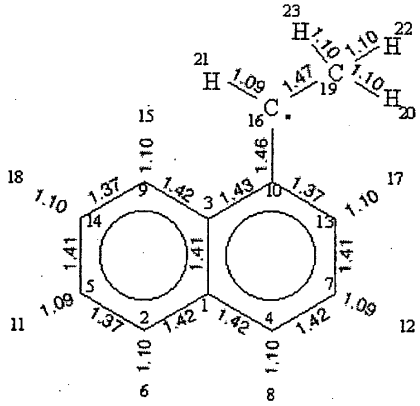

Naphthalene 1,Ethyl β Radical

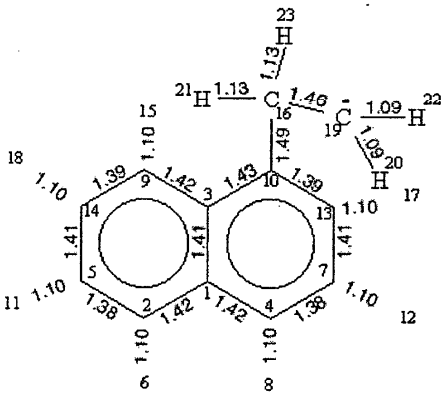

Naphthalene 1,Ethyle α Radical

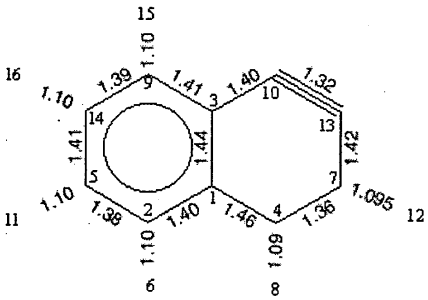

Naphtyne

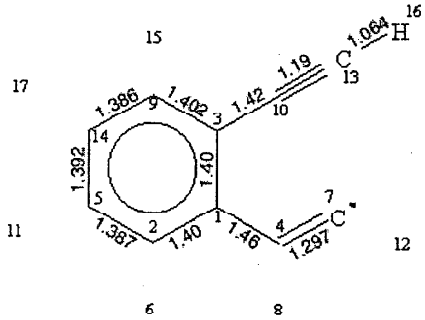

4-Ethynyl-phenyl-1,vinyl Radical

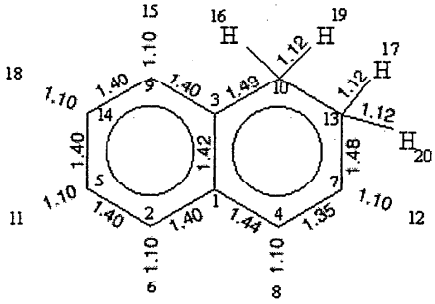

α,β Dihydro-Naphthalene

were taken from Gaussian 94 calculations. If no IR spectra were available, then the Gaussian 94 vibrations were accepted, and the moments of inertia were sometimes preferred from AM1 rather than from Gaussian 94. Additional internal moments of inertia and rotation barriers had to be used for the branches outstretched of the main naphthalene rings. These data are not readily available either from MOPAC or from the Gaussian 94 programs used as part of the standard output. Therefore the data from benzene like counterparts were used as listed in Table 2. These properties were calculated by Melius and exist in his database[31] but were not made available to the public. In some instances it was possible to calculate the internal moments of inertia from the molecule's structure using the Brinkmann and Burcat[6] program. For enthalpies of formation, existing experimental values were preferred over other values.

TABLE 1. Interatomic distances in Å and configuration of species as calculated by the MOPAC program—Continued

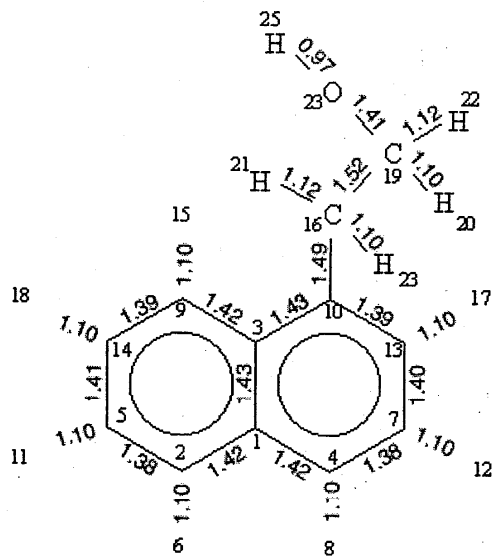

1, Ethanol Naphthalene

TABLE 2. Internal rotation values for different benzene species. The values in parentheses are the internal rotation symmetry

Species	I_r[a]	$V(x)$ (kcal/mole)	Reference
C_6H_5–OH phenol	1.2236	(2) 3.468	8
C_7H_8O benzaldehyde	14.4	(2) 4.9	3
C_7H_8 toluene	5.1387	(3) 0.01	b
C_7H_8 toluene		0.013	25
$C_6H_5C{\equiv}CH$	0.		6
$C_6H_5C{\equiv}C\cdot$	0.		6
$C_6H_5CH{=}CH_2$	33.9278		6
$C_6H_5CH{=}CH_2$		(2) 3.06	23
$C_6H_5CH{=}CH\cdot$ trans	19.643 85	(2) 4.4	b
$C_6H_5CH{=}CH\cdot$ trans	27.3405		6
C_6H_5–C_2H_5	44.728 13		6
C_6H_5–C_2H_5		(2) 2.8	4
C_6H_5–C_2H_5		1.53	25
$C_6H_5CH_2$–CH_3	4.171 38		6
$C_6H_5CH_2$–CH_3		(3) 2.8	4
$C_6H_5CH_2$–CH_3		3.25	25
C_6H_5 $CH_2CH_2\cdot$	36.8853		6
C_6H_5–$CH_2CH_2\cdot$		(2) 3.0	4
$C_6H_5CH_2$–$CH_2\cdot$	2.761		6
$C_6H_5CH_2$–$CH_2\cdot$		(3) 3.0	4
C_6H_5–$CH{\cdot}CH_3$	40.3467		6
C_6H_5–$CH{\cdot}CH_3$		(2) 2.9	4
C_6H_5–CH_2CH_2OH	202.848		6
C_6H_5–CH_2CH_2OH		(2) 2.87	12
$C_6H_5CH_2$–CH_2OH	47.5277		6
$C_6H_5CH_2$–CH_2OH		(2) 2.75	12
$C_6H_5CH_2CH_2$–OH	1.395 17		6
$C_6H_5CH_2CH_2$–OH		(1) 1.03	12

[a]The dimensions of I_r are g cm$^2\times10^{-40}$.
[b]These values were obtained as private communications and are unavailable to the public.

3. The Individual Substances

3.1. Naphthalene: $C_{10}H_8$

Naphthalene is the best known and most investigated of all its derivatives and radicals. The experimental values for naphthalene have been reported by Chen *et al.*[12] An extensive literature search was reported by Dorofeeva and Gurvich.[17,18] The calculations reported here were done for calibration and comparative purposes, since its thermodynamics are well known.

As seen in Table 3, the vibrations calculated with Gaussian 94 if multiplied by 0.91 compare well with the experimental values quoted by Chen *et al.*[12] However the BP86/6-31G calculations need no scaling. Indeed, the thermodynamic calculations with BP86/6-31G showed a difference of about 0.3–0.5 calories from the values calculated with Chen's vibrations for C_p the heat content and S the entropy. The values of Melius also fit very well, as they have been already scaled.[32] The moments of inertia of the MOPAC/PM3 calculation fit better than the rest to the experimental value, although the differences between PM3 and AM1 or AM1/UHF are small. Due to the $S^2=0.7451$ value the molecule is "UHF unstable" and this is probably caused by the fact that the MOPAC programs are not calibrated or intended to calculate polyaromatic species. Melius gives an erroneous spin value of 1. The MOPAC enthalpies of formation are 4 kcal/mol higher than the experimental value and Melius' enthalpy of formation is surprisingly 10.5 kcal/mol lower. Table 3 lists all the literature and calculated molecular vibrations, moments of inertia and enthalpies of formation of naphthalene. Table 4 lists the ideal gas thermodynamic values of naphthalene according to experimental data.

3.2. 1-Naphthyl Radical: $C_{10}H_7\cdot$

The existing calculations of fundamental data for the naphthyl radical are those of Melius[31] and of Wang and Frenklach.[48] We are unaware of other thermodynamic values available. The agreement of Wang and Frenklach's vibrations after adjustment by 0.9 fits well Melius's and the AM1 calculations. The PM3 results are not far behind. Melius's moments of inertia agree better with the PM3 calculation. Marinov *et al.*'s[28] enthalpy of formation is in excellent agreement with that of Wang and Frenklach, the PM3 calculation agrees with the NIST 94[42] prediction. For the thermodynamic calculations, the Gaussian 94 BP86/6-31G(d,p) set of vibrations and the AM1 moments of inertia were preferred. Table 5 lists all the literature and calculated molecular vibrations, moments of inertia and enthalpies of formation of the α-naphthyl radical. Table 6 lists the thermodynamic values of the α-naphthyl radical.

3.3. 1,2-Naphthyne: $C_{10}H_6$

No calculations for this species are known. The enthalpy of formation was estimated by Wang and Frenklach.[48] It was

TABLE 3. Fundamental vibrations, moments of inertia and enthalpies of formation of naphthalene. The properties marked in bold were chosen for thermodynamic calculations

PM3												
	158	160	336	392	429	463	522	524	544	636	744	748
	799	809	850	911	912	920	953	980	1002	1019	1087	1115
	1124	1128	1156	1157	1186	1232	1276	1412	1447	1487	1585	1594
	1679	1779	1797	1830	3051	3052	3053	3055	3065	3066	3077	3077
AM1												
	165	167	349	403	443	480	547	548	553	664	754	782
	838	853	894	938	956	964	968	987	1000	1007	1167	1174
	1190	1206	1210	1211	1284	1320	1356	1460	1475	1533	1610	1620
	1694	1757	1794	1807	3182	3183	3184	3185	3190	3191	3199	3200
AM1 UHF												
	159	161	333	399	425	460	514	540	545	655	726	764
	811	847	865	907	930	937	952	960	967	973	1162	1168
	1183	1201	1203	1210	1279	1317	1381	1447	1451	1509	1524	1579
	1649	1672	1709	1710	3167	3179	3186	3187	3189	3195	3198	3203
Melius UHF												
	167.8	183.5	347.3	385.4	463.8	477.5	492.1	495.1	602.2	611.4	724.4	742.2
	762.0	767.3	791.7	842.6	886.6	913.1	959.9	964.3	980.2	997.0	997.4	1003.8
	1065	1112	1137	1149	1171	1226	1241	1318	1328	1377	1449	1452
	1503	1592	1613	1647	2991	2994	2995	3000	3010	3012	3022	3024
IR spectrum (NIST 97)												
						477			625	625	692	773
	830	868			948	1016						
	1126	1225	1272				1393			1507	1600	1665
	1665	1720	1770	1838	1891	1945					2969	3063
Gaussian 94 BPW91/D95V												
	188	203	386	430	516	529	546	550	668	680	803	827
	851	853	880	935	986	1013	1069	1075	1094	1102	1107	1110
	1182	1235	1259	1274	1301	1362	1380	1464	1488	1525	1606	1609
	1672	1776	1790	1834	3356	3358	3361	3366	3376	3378	3389	3390
Gaussian 94 BP86/6-31G(d,p)												
	170	182	351	382	462	473	500	506	613	613	705	754
	756	772	783	819	863	907	916	923	944	951	1018	1026
	1118	1141	1150	1151	1216	1230	1251	1377	1389	1389	1453	1453
	1516	1576	1602	1631	3092	3093	3095	3098	3111	3111	3124	3125
Chen, Kudchadker, and Wilhoit (Ref. 12)												
	176	**191**	**359**	**386**	**466**	**472**	**506**	**512**	**581**	**617**	**725**	**761**
	778	**782**	**841**	**876**	**877**	**936**	**950**	**958**	**970**	**980**	**1008**	**1025**
	1125	**1144**	**1145**	**1168**	**1209**	**1242**	**1265**	**1361**	**1380**	**1389**	**1443**	**1463**
	1509	**1577**	**1595**	**1628**	**3027**	**3030**	**3058**	**3060**	**3060**	**3065**	**3090**	**3092**

Principal moments of inertia/10^{-40} gm·cm^2

Method	I_a	I_b	I_c
PM3; σ(total)=4	268.138347	675.958599	944.096056
AM1	269.087662	679.796075	948.883613
AM1 UHF	270.065888	683.017483	953.081537
Melius UHF	265.4047	673.8699	939.2750
Gaussian 94 BPW91/D95V	266.867	676.891	943.7586
BP86/6-31g	272.2750	689.35472	961.62974
Chen *et al.*[12]	**268.532**	**674.189**	**942.721**

Dorofeeva and Gurvich[19]-$I_aI_bI_c = 174\times 10^{-114}$ and σ(total)=4

TABLE 3. Fundamental vibrations, moments of inertia and enthalpies of formation of naphthalene. The properties marked in bold were chosen for thermodynamic calculations—Continued.

Enthalpy of formation/kcal·mol^{-1}			
Method	$\Delta_f H°(0\ K)$	$\Delta_f H°(298.15\ K)$	$\Delta_f H°(300\ K)$
PM3		40.68	
AM1		40.59	
AM1 UHF (spin=0.00; S^2=0.7451)		38.74	
Melius[31] (spin=1; S^2=1.012)	31.04		25.22
NIST 94[35]		36.0	
Gaussian 94[21] BP86/6-31G		29.94	
Colomina *et al.*[13]		35.9±0.3	
Alberty and Bloomstein[12]		36.08	
Dorofeeva and Gurvich[19]		35.92	
Experimental value[12,25]		**35.99**	

Zero Point Energy and Ionization Potential		
Method	Zero point energy/kcal·mol^{-1}	Ionization potential/eV
PM3	92.100	8.835
AM1	95.336	8.712
AM1 UHF	93.976	8.964
Gaussian 94 BP86/6-31g	89.88951*	
Colomina *et al.*[13]		8.13±0.1

* zero point vibrational energy

decided to use the vibration values of Gaussian 94 BP86 unscaled, and the moments of inertia, and to accept Wang and Frenklach's estimate for the enthalpy of formation. The S^2=1.9148 state shows a triplet condition for the AM1-UHF calculation, thus it is a UHF unstable molecule.[43] Table 7 lists all the literature and calculated molecular vibrations, moments of inertia and enthalpies of formation of 1,2-naphthyne. Table 8 lists the thermodynamic data calculated for 1,2-naphthyne.

3.4. 1,2-Dihydro-Naphthalene: 1,2-$C_{10}H_{10}$

This species was calculated by Dorofeeva[19] by estimating the vibrations. Dorofeeva's values were reproduced in a TRC (Thermodynamics Research Center, Texas A&M University) monograph by Frenkel *et al.*[20] In our MOPAC calculations, the S^2=0.4793 value found is better than for most other stable molecules. Marinov's[28] enthalpy of formation $\Delta_f H_{298}$=31.6 kcal/mol, is probably high, but Dorofeeva's estimate[19] of $\Delta_f H_{298}$=34.4 kcal/mol, is even higher. Therefore, the old Pedley and Rylance value[36] $\Delta_f H_{298}$ =28.0 kcal/mol, was chosen. The Gaussian 94 vibrations and the moments of inertia were used. Table 9 lists all the literature and calculated molecular vibrations, moments of inertia and enthalpies of formation of 1,2-dihydro-naphthalene. Table 10 lists the thermodynamic data calculated for 1,2-dihydro-naphthalene.

3.5. 2-Hydro-Naphthalene Radical: 2-$C_{10}H_9$·

This species was estimated by Marinov *et al.*[28] using Benson's group additivity method.[4] There is no other literature quotation. The S^2=1.380 shows a halfway condition between a doublet and a triplet. Thus this radical can be also declared as UHF unstable. The Gaussian 94 vibrations and moments of inertia were used. Marinov *et al.*'s[28] enthalpy of formation, $\Delta_f H_{298}$=54.86 kcal/mol, matches well the Gaussian 94 estimate as well as the PM3 value. Table 11 lists all the literature and calculated molecular vibrations, moments of inertia and enthalpies of formation of the 2-hydro-naphthalene radical. Table 12 lists the thermodynamic data calculated for the 2-hydro-napthalene radical.

3.6. 1-Methyl-Naphthalene: 1-$C_{10}H_7CH_3$

Methyl-naphthalene was first calculated by Pitzer and co-workers,[33] then recalculated by Stull *et al.*,[46] and can be easily and quite accurately estimated using Benson's group additivity methods (in Ref. 2, and the THERM program[40]). In addition, the IR spectrum is available in the NIST WebBook[1]. For the thermodynamic calculations the IR values were adopted and supplemented with values from the Gaussian 94 calculation. The AM1 values for the moments of inertia were taken since they show a more packed result. The NIST 97 experimental value,[41] $\Delta H_f(298)$ =27.75 kcal/mol, was adopted. The internal rotation moment of inertia and rotation barrier were taken from toluene (Melius, private communication). The rotation barrier was recently confirmed by Lagowski *et al.*[25] Table 13 lists all the literature and calculated molecular vibrations, moments of inertia and enthalpies of formation of 1-methyl-naphthalene. Table 14 lists the thermodynamic data of 1-methyl-naphthalene.

TABLE 4. Thermodynamic properties of $C_{10}H_8$ naphthalene (mol wt=128.173 520)

T (K)	C_p (J/mol K)	H_T-H_{298} (kJ/mol)	S_T (J/mol K)	$-(G_T-H_{298})/T$ (J/mol K)	H_T (kJ/mol)	$\Delta_f H_T$ (kJ/mol)	Log K
0	-------	−20.713	-------	-------	129.869	174.276	-------
100	46.939	−16.982	247.936	417.753	133.600	165.398	−94.9783
200	84.223	−10.572	290.895	343.753	140.010	157.762	−52.5630
298.15	131.920	0.000	333.267	333.267	150.582	150.582	−39.2717
300	132.840	0.245	334.086	333.269	150.827	150.457	−39.1092
400	180.079	15.941	378.913	339.062	166.523	144.298	−32.6861
500	219.747	36.002	423.513	351.510	186.584	139.401	−28.9794
600	251.537	59.626	466.497	367.121	210.208	135.534	−26.5848
700	277.015	86.099	507.255	384.257	236.681	132.531	−24.9177
800	297.740	114.871	545.644	402.055	265.453	130.279	−23.6924
900	314.859	145.527	581.732	420.035	296.109	128.693	−22.7532
1000	329.173	177.749	615.668	437.919	328.332	127.659	−22.0092
1100	341.247	211.287	647.624	455.545	361.869	127.101	−21.4046
1200	351.503	245.938	677.768	472.819	396.520	126.930	−20.9020
1300	360.264	281.538	706.258	489.691	432.120	127.066	−20.4773
1400	367.785	317.950	733.239	506.132	468.532	127.421	−20.1115
1500	374.274	355.061	758.840	522.133	505.643	127.970	−19.7946
1600	379.896	392.776	783.179	537.694	543.358	128.641	−19.5157
1700	384.790	431.016	806.360	552.822	581.598	129.389	−19.2678
1800	389.068	469.713	828.478	567.526	620.295	130.190	−19.0463
1900	392.823	508.812	849.617	581.821	659.394	131.011	−18.8469
2000	396.134	548.263	869.852	595.720	698.845	131.832	−18.6658
2100	399.063	588.026	889.252	609.239	738.608	132.634	−18.5017
2200	401.665	628.065	907.877	622.393	778.647	133.387	−18.3511
2300	403.985	668.349	925.784	635.197	818.932	134.102	−18.2131
2400	406.061	708.854	943.022	647.666	859.436	134.752	−18.0863
2500	407.924	749.555	959.637	659.815	900.137	135.312	−17.9683
2600	409.602	790.432	975.669	671.657	941.014	135.812	−17.8593
2700	411.117	831.469	991.157	683.205	982.052	136.213	−17.7584
2800	412.490	872.651	1006.133	694.472	1023.233	136.522	−17.6644
2900	413.737	913.963	1020.630	705.470	1064.545	136.732	−17.5761
3000	414.873	955.395	1034.676	716.211	1105.977	136.815	−17.4935
3100	415.910	996.935	1048.297	726.705	1147.517	136.823	−17.4173
3200	416.860	1038.574	1061.516	736.962	1189.156	136.698	−17.3452
3300	417.731	1080.304	1074.357	746.993	1230.886	136.460	−17.2775
3400	418.532	1122.118	1086.840	756.805	1272.700	136.106	−17.2140
3500	419.270	1164.008	1098.983	766.409	1314.591	135.614	−17.1547
3600	419.952	1205.970	1110.804	775.812	1356.552	135.014	−17.0982
3700	420.582	1247.997	1122.319	785.022	1398.579	134.273	−17.0457
3800	421.167	1290.085	1133.543	794.047	1440.667	133.402	−16.9956
3900	421.709	1332.229	1144.490	802.893	1482.811	132.406	−16.9491
4000	422.213	1374.425	1155.173	811.567	1525.007	131.252	−16.9046
4100	422.683	1416.670	1165.605	820.075	1567.253	129.989	−16.8634
4200	423.122	1458.961	1175.796	828.424	1609.543	128.576	−16.8242
4300	423.531	1501.294	1185.757	836.619	1651.876	127.012	−16.7868
4400	423.914	1543.666	1195.498	844.665	1694.248	125.277	−16.7516
4500	424.273	1586.076	1205.028	852.567	1736.658	123.430	−16.7189
4600	424.610	1628.520	1214.357	860.331	1779.102	121.446	−16.6879
4700	424.926	1670.997	1223.492	867.961	1821.579	119.331	−16.6588
4800	425.224	1713.505	1232.442	875.462	1864.087	117.078	−16.6318
4900	425.504	1756.041	1241.213	882.837	1906.624	114.691	−16.6063
5000	425.768	1798.605	1249.812	890.091	1949.187	112.066	−16.5816
5100	426.018	1841.195	1258.245	897.227	1991.777	109.422	−16.5598
5200	426.253	1883.808	1266.520	904.249	2034.390	106.576	−16.5384
5300	426.476	1926.445	1274.642	911.161	2077.027	103.589	−16.5185
5400	426.687	1969.103	1282.615	917.967	2119.685	100.464	−16.4999
5500	426.887	2011.782	1290.446	924.668	2162.364	97.201	−16.4825
5600	427.076	2054.480	1298.140	931.269	2205.062	93.798	−16.4662
5700	427.256	2097.197	1305.701	937.772	2247.779	90.263	−16.4513
5800	427.427	2139.931	1313.133	944.179	2290.513	86.594	−16.4373
5900	427.589	2182.682	1320.441	950.495	2333.264	82.794	−16.4243
6000	427.744	2225.449	1327.629	956.721	2376.031	78.869	−16.4124

TABLE 5. Fundamental vibrations, moments of inertia and enthalpies of formation of 1-naphthyl radical. The properties marked in bold were chosen for thermodynamic calculations

PM3												
	104	170	356	368	395	479	508	521	602	628	753	765
	796	819	900	913	919	936	962	978	1015	1067	1094	1116
	1148	1169	1199	1241	1281	1399	1447	1480	1585	1607	1663	1765
	1809	1893	3005	3052	3064	3079	3085	3096	3100			
AM1												
	167.4	184	373	392	466	507	545	554	632	662	767	814
	853	867	932	944	956	962	976	998	1007	1149	1167	1187
	1205	1211	1244	1295	1326	1436	1469	1506	1603	1623	1668	1738
	1796	1879	3182	3185	3189	3195	3198	3201	3227			
AM1 UHF												
	158	162	342	390	416	474	514	536	545	648	715	774
	802	843	872	897	932	940	942	945	964	1143	1158	1180
	1193	1206	1233	1290	1372	1415	1456	1490	1531	1566	1593	1653
	1697	1776	3183	3183	3188	3192	3198	3199	3218			
Melius[31]												
	163.8	186.6	343	387	454	487	491	494	594	597	724	744
	754	761	788	852	891	899	949	954	983	988	994	1075
	1104	1139	1162	1164	1225	1300	1323	1348	1414	1442	1484	1538
	1592	1632	2995	2997	3005	3012	3016	3024	3026			
Wang and Frenklach[48]												
	182	208	373	375	422	512	515	526	527	626	713	787
	806	834	899	910	912	946	964	970	995	1089	1106	1121
	1135	1145	1171	1228	1247	1353	1390	1424	1506	1531	1569	1641
	1698	1777	3014	3027	3029	3035	3037	3039	3063			
Gaussian 94 BP86/6-31g(d,p)												
	166	**181**	**347**	**386**	**444**	**489**	**490**	**508**	**588**	**609**	**705**	**742**
	753	**760**	**775**	**830**	**857**	**898**	**913**	**925**	**949**	**1017**	**1028**	**1106**
	1139	**1146**	**1167**	**1218**	**1234**	**1339**	**1350**	**1384**	**1418**	**1446**	**1487**	**1548**
	1599	**1623**	**3093**	**3094**	**3106**	**3107**	**3117**	**3119**	**3129**			

Principal moments of inertia/10^{-40} gm·cm^2

Method	I_a	I_b	I_c
PM3	252.167168	681.258370	933.276813
AM1	**253.426871**	**684.922226**	**938.348672**
AM1 UHF (spin=0.5; S^2=1.702625)	254.766017	688.679871	943.439752
Melius (spin=2; S^2=0.881)	252.2865	677.0342	929.8988
Gaussian 94	258.97458	691.79392	950.7675
Wang and Frenklach[48]	$I_aI_bI_c$=165063.33×10^{-117}		

Enthalpy of formation/kcal·mol^{-1}

Method	$\Delta_fH°$(0 K)	$\Delta_fH°$(298.15 K)	$\Delta_fH°$(300 K)
PM3		95.74	
AM1		98.29	
AM1 UHF		88.78	
Melius[31]	103.73		98.94
Gaussian 94[21]		88.30	
Wang and Frenklach[47]		**94.7**	
NIST 94[35]		95.8	
Marinov[28]		94.50	

Zero Point Energy and Ionization Potential

Method	Zero point energy/kcal·mol^{-1}	Ionization potential/eV
PM3	85.314	10.22693
AM1	87.773	9.13961
AM1 UHF	85.934	
Gaussian 94 BP86/6-31g	81.951*	

*zero point vibrational energy

TABLE 6. Thermodynamic properties of the $C_{10}H_7\cdot$ naphthyl radical (mol wt=127.165 580)

T (K)	C_p (J/mol K)	H_T-H_{298} (kJ/mol)	S_T (J/mol K)	$-(G_T-H_{298})/T$ (J/mol K)	H_T (kJ/mol)	$\Delta_f H_T$ (kJ/mol)	Log K
0	-------	−20.980	-------	-------	375.245	415.418	-------
100	47.778	−17.207	265.561	437.636	379.017	408.080	−218.1882
200	85.702	−10.680	309.304	362.705	385.545	401.909	−112.2458
298.15	132.216	0.000	352.133	352.133	396.225	396.225	−77.9078
300	133.089	0.245	352.953	352.135	396.470	396.127	−77.4799
400	177.170	15.817	397.445	357.903	412.042	391.295	−60.3361
500	213.306	35.409	441.014	370.196	431.634	387.391	−50.1659
600	241.941	58.227	482.536	385.491	454.452	384.183	−43.4477
700	264.815	83.606	521.612	402.176	479.830	381.555	−38.6858
800	283.447	111.049	558.230	419.419	507.274	379.451	−35.1370
900	298.893	140.189	592.535	436.769	536.414	377.836	−32.3900
1000	311.864	170.745	624.717	453.971	566.970	376.638	−30.2005
1100	322.854	202.496	654.970	470.883	598.721	375.812	−28.4143
1200	332.227	235.262	683.475	487.423	631.487	375.295	−26.9281
1300	340.263	268.897	710.392	503.549	665.122	375.026	−25.6724
1400	347.184	303.278	735.868	519.241	699.503	374.933	−24.5957
1500	353.170	338.303	760.030	534.495	734.527	374.999	−23.6637
1600	358.370	373.886	782.993	549.315	770.110	375.164	−22.8477
1700	362.905	409.954	804.858	563.709	806.179	375.387	−22.1269
1800	366.876	446.448	825.716	577.690	842.673	375.651	−21.4859
1900	370.367	483.314	845.648	591.272	879.538	375.925	−20.9120
2000	373.449	520.508	864.725	604.471	916.732	376.194	−20.3947
2100	376.180	557.992	883.013	617.303	954.217	376.440	−19.9270
2200	378.607	595.733	900.570	629.782	991.958	376.635	−19.5011
2300	380.774	633.704	917.449	641.925	1029.929	376.791	−19.1123
2400	382.714	671.881	933.696	653.746	1068.105	376.884	−18.7560
2500	384.456	710.241	949.355	665.259	1106.465	376.889	−18.4276
2600	386.026	748.766	964.465	676.478	1144.991	376.834	−18.1246
2700	387.445	787.441	979.061	687.416	1183.666	376.685	−17.8446
2800	388.731	826.251	993.175	698.085	1222.475	376.447	−17.5846
2900	389.900	865.183	1006.837	708.498	1261.408	376.113	−17.3421
3000	390.966	904.227	1020.073	718.664	1300.452	375.658	−17.1160
3100	391.939	943.373	1032.909	728.595	1339.598	375.131	−16.9058
3200	392.830	982.612	1045.367	738.300	1378.837	374.476	−16.7084
3300	393.648	1021.937	1057.467	747.790	1418.162	373.714	−16.5232
3400	394.400	1061.340	1069.230	757.072	1457.564	372.839	−16.3493
3500	395.093	1100.815	1080.673	766.155	1497.040	371.834	−16.1862
3600	395.733	1140.357	1091.812	775.047	1536.581	370.725	−16.0320
3700	396.326	1179.960	1102.663	783.755	1576.185	369.481	−15.8870
3800	396.875	1219.620	1113.240	792.287	1615.845	368.114	−15.7497
3900	397.385	1259.334	1123.556	800.650	1655.558	366.627	−15.6206
4000	397.859	1299.096	1133.623	808.849	1695.321	364.989	−15.4977
4100	398.301	1338.904	1143.452	816.890	1735.129	363.248	−15.3822
4200	398.713	1378.755	1153.055	824.780	1774.980	361.363	−15.2723
4300	399.098	1418.646	1162.442	832.524	1814.871	359.334	−15.1676
4400	399.459	1458.574	1171.621	840.127	1854.799	357.140	−15.0683
4500	399.797	1498.537	1180.602	847.594	1894.762	354.841	−14.9745
4600	400.113	1538.533	1189.392	854.929	1934.757	352.412	−14.8852
4700	400.411	1578.559	1198.001	862.137	1974.784	349.858	−14.8004
4800	400.691	1618.614	1206.434	869.222	2014.839	347.173	−14.7200
4900	400.955	1658.697	1214.698	876.189	2054.922	344.360	−14.6435
5000	401.204	1698.805	1222.801	883.040	2095.030	341.315	−14.5698
5100	401.438	1738.937	1230.748	889.780	2135.162	338.258	−14.5011
5200	401.660	1779.092	1238.546	896.413	2175.317	335.004	−14.4346
5300	401.870	1819.269	1246.199	902.940	2215.493	331.615	−14.3715
5400	402.068	1859.466	1253.712	909.367	2255.690	328.093	−14.3114
5500	402.257	1899.682	1261.092	915.695	2295.907	324.439	−14.2540
5600	402.435	1939.917	1268.341	921.928	2336.141	320.650	−14.1992
5700	402.604	1980.169	1275.466	928.068	2376.393	316.733	−14.1472
5800	402.765	2020.437	1282.469	934.118	2416.662	312.685	−14.0974
5900	402.918	2060.721	1289.356	940.081	2456.946	308.511	−14.0499
6000	403.064	2101.021	1296.129	945.959	2497.245	304.215	−14.0048

TABLE 7. Fundamental vibrations, moments of inertia and enthalpies of formation for naphthyne. The properties marked in bold were chosen for thermodynamic calculations

PM3												
	162	180	360	394	452	502	505	526	549	602	732	755
	775	823	877	894	920	958	977	1012	1093	1098	1119	1152
	1154	1204	1287	1348	1429	1459	1557	1569	1686	1731	1823	2145
	3049	3056	3058	3068	3079	3113						
AM1												
	170	190	377	410	453	507	521	540	557	626	726	785
	811	862	917	921	954	966	980	1005	1150	1160	1191	1209
	1227	1292	1351	1380	1456	1490	1561	1581	1681	1736	1817	2122
	3178	3181	3182	3186	3196	3238						
AM1 UHF												
	164	176	343	400	440	475	521	528	539	637	708	780
	812	823	882	916	928	937	939	965	1152	1156	1186	1202
	1214	1289	1371	1377	1448	1485	1502	1553	1595	1655	1701	1747
	3181	3186	3188	3190	3198	3222						
Gaussian 94:BP86/6-31G(d,p) (6D, 7F)												
	165	**196**	**359**	**384**	**398**	**407**	**489**	**499**	**544**	**562**	**677**	**701**
	734	**767**	**780**	**842**	**844**	**890**	**916**	**949**	**1020**	**1082**	**1089**	**1127**
	1154	**1203**	**1212**	**1286**	**1326**	**1363**	**1401**	**1442**	**1490**	**1533**	**1610**	**1994**
	3095	**3099**	**3110**	**3123**	**3133**	**3134**						

Principal moments of inertia/10^{-40} gm·cm^2

Method	I_a	I_b	I_c
PM3	245.857321	659.881381	905.737303
AM1	246.132269	664.900498	911.032027
AM1 UHF	251.517951	665.373997	916.891484
Gaussian 94[21] BP86/6-31G	**251.00753**	**671.74195**	**922.74938**

Enthalpy of formation/kcal·mol^{-1}

Method	$\Delta_f H°$(298.15 K)
PM3	145.04
AM1	156.99
AM1 UHF (spin=0.0; S^2=1.914848)	136.96
NIST 94[35] (erroneous)	92.0
Gaussian 94[21] BP86/6-31G	113.48
Wang and Frenklach[48]	**119.7***

*C_p(298.15 K)=30.5 cal·K^{-1}·mol^{-1} and S(298.15 K)=82.2 cal·K^{-1}·mol^{-1}

Zero Point Energy and Ionization Potential

Method	Zeropoint energy/kcal·mol^{-1}	Ionization potential/eV
PM3	9.153	77.592
AM1	9.054	79.920
AM1 UHF	9.366	78.318
Gaussian 94 BP86/6-31g		74.52082*

*zero point vibrational energy

3.7. 1-Naphthyl-Methyl Radical: $C_{10}H_7CH_2$·

This radical was estimated using Benson's group additivity methods by McMillan and Golden,[30] and by Marinov *et al.*[28] No molecular fundamental data are available. The Gaussian 94 BP86/6-31G calculations were accepted for the vibrations unscaled. The moments of inertia calculated by the AM1 method were accepted since they are tighter. No internal rotation moment of inertia and rotation barrier were considered (except for the respective vibration of 95.8 cm^{-1}) since this was the procedure used by Melius[31] and by Brouver *et al.*[7] for the benzyl radical. Table 16 lists the thermodynamic values calculated from the fundamentals in Table 15.

3.8. 1-Ethyl-Naphthalene: $C_{10}H_7C_2H_5$

Ethyl-naphthalene was first calculated by Pitzer and co-workers[33] and later recalculated by Stull *et al.*[46] and used by Alberty and Bloomstein.[2] Calculations of this species with the MOPAC/AM1 semiempirical method failed. The PM3 and AM1/UHF methods were successful. The thermo-

TABLE 8. Thermodynamic properties of $C_{10}H_6$ naphthyne (mol wt=126.157 640)

T (K)	C_p (J/mol K)	H_T-H_{298} (kJ/mol)	S_T (J/mol K)	$-(G_T-H_{298})/T$ (J/mol K)	H_T (kJ/mol)	$\Delta_f H_T$ (kJ/mol)	Log K
0	-------	−21.264	-------	-------	479.561	515.501	-------
100	48.257	−17.498	259.345	434.325	483.327	509.655	−268.9382
200	87.844	−10.800	304.195	358.197	490.024	505.001	−136.3183
298.15	132.178	0.000	347.542	347.542	500.825	500.825	−93.0597
300	132.997	0.245	348.362	347.545	501.070	500.753	−92.5187
400	174.127	15.658	392.417	353.273	516.483	497.215	−70.7943
500	207.797	34.818	435.031	365.396	535.642	494.340	−57.8448
600	234.451	56.982	475.368	380.398	557.807	491.944	−49.2576
700	255.642	81.526	513.161	396.695	582.351	489.949	−43.1517
800	272.772	107.976	548.454	413.484	608.801	488.328	−38.5895
900	286.850	135.979	581.421	430.333	636.804	487.063	−35.0514
1000	298.576	165.268	612.269	447.001	666.093	486.100	−32.2273
1100	308.439	195.632	641.202	463.354	696.457	485.407	−29.9209
1200	316.800	226.906	668.408	479.320	727.730	484.936	−28.0009
1300	323.931	258.951	694.054	494.861	759.776	484.639	−26.3782
1400	330.047	291.658	718.290	509.963	792.483	484.454	−24.9870
1500	335.319	324.933	741.245	524.623	825.757	484.374	−23.7828
1600	339.885	358.698	763.035	538.849	859.523	484.347	−22.7289
1700	343.858	392.890	783.762	552.651	893.715	484.339	−21.7986
1800	347.331	427.453	803.517	566.043	928.278	484.340	−20.9719
1900	350.379	462.342	822.380	579.042	963.167	484.323	−20.2322
2000	353.065	497.517	840.422	591.663	998.342	484.278	−19.5661
2100	355.442	532.945	857.707	603.923	1033.769	484.190	−18.9642
2200	357.554	568.597	874.291	615.839	1069.421	484.035	−18.4167
2300	359.436	604.448	890.228	627.424	1105.273	483.826	−17.9172
2400	361.121	640.477	905.561	638.696	1141.302	483.543	−17.4598
2500	362.633	676.666	920.334	649.668	1177.491	483.162	−17.0387
2600	363.994	712.999	934.584	660.354	1213.824	482.713	−16.6504
2700	365.224	749.461	948.345	670.767	1250.285	482.163	−16.2918
2800	366.338	786.040	961.647	680.919	1286.864	481.518	−15.9590
2900	367.350	822.725	974.521	690.822	1323.550	480.774	−15.6491
3000	368.273	859.507	986.990	700.488	1360.332	479.904	−15.3603
3100	369.115	896.377	999.080	709.926	1397.202	478.960	−15.0916
3200	369.885	933.327	1010.811	719.146	1434.152	477.888	−14.8397
3300	370.592	970.352	1022.204	728.158	1471.176	476.706	−14.6035
3400	371.243	1007.444	1033.277	736.970	1508.269	475.412	−14.3817
3500	371.842	1044.599	1044.047	745.591	1545.423	473.987	−14.1736
3600	372.395	1081.811	1054.530	754.027	1582.636	472.461	−13.9772
3700	372.907	1119.076	1064.741	762.287	1619.901	470.800	−13.7924
3800	373.381	1156.391	1074.692	770.378	1657.216	469.018	−13.6176
3900	373.822	1193.751	1084.396	778.306	1694.576	467.119	−13.4529
4000	374.231	1231.154	1093.866	786.077	1731.979	465.071	−13.2965
4100	374.613	1268.597	1103.111	793.697	1769.421	462.923	−13.1491
4200	374.969	1306.076	1112.143	801.172	1806.901	460.634	−13.0091
4300	375.301	1343.590	1120.970	808.507	1844.414	458.205	−12.8758
4400	375.612	1381.135	1129.602	815.707	1881.960	455.615	−12.7492
4500	375.904	1418.711	1138.046	822.777	1919.536	452.924	−12.6294
4600	376.177	1456.316	1146.311	829.721	1957.140	450.107	−12.5155
4700	376.434	1493.946	1154.404	836.543	1994.771	447.168	−12.4071
4800	376.676	1531.602	1162.332	843.248	2032.427	444.104	−12.3043
4900	376.903	1569.281	1170.101	849.839	2070.106	440.915	−12.2062
5000	377.118	1606.982	1177.717	856.321	2107.807	437.500	−12.1120
5100	377.320	1644.704	1185.187	862.696	2145.529	434.076	−12.0236
5200	377.512	1682.446	1192.516	868.969	2183.271	430.459	−11.9383
5300	377.692	1720.206	1199.709	875.142	2221.031	426.712	−11.8571
5400	377.864	1757.984	1206.770	881.218	2258.809	422.836	−11.7797
5500	378.026	1795.779	1213.705	887.200	2296.603	418.831	−11.7056
5600	378.180	1833.589	1220.518	893.091	2334.414	414.694	−11.6349
5700	378.326	1871.414	1227.213	898.895	2372.239	410.433	−11.5675
5800	378.465	1909.254	1233.794	904.612	2410.079	406.044	−11.5030
5900	378.597	1947.107	1240.265	910.247	2447.932	401.532	−11.4413
6000	378.722	1984.973	1246.629	915.800	2485.798	396.899	−11.3824

TABLE 9. Fundamental vibrations, moments of inertia and enthalpies of formation for 1,2-dihydro-naphthalene $C_{10}H_{10}$. The properties marked in bold were chosen for thermodynamic calculations.

PM3												
	110	134	229	345	384	418	485	505	507	606	688	709
	771	806	826	878	896	909	938	968	993	1006	1031	1072
	1090	1107	1111	1120	1155	1157	1187	1230	1271	1339	1351	1382
	1395	1406	1435	1577	1638	1784	1802	1862	2938	2950	3023	3030
	3051	3054	3056	3066	3072	3079						
AM1												
	105	137	228	352	390	430	500	520	534	632	695	735
	807	845	867	920	930	953	960	982	1002	1053	1098	1155
	1176	1179	1187	1197	1205	1234	1289	1326	1354	1385	1395	1404
	1427	1449	1490	1602	1665	1766	1786	1862	2991	3011	3079	3081
	3178	3184	3186	3191	3191	3201						
AM1 UHF												
	108	130	223	340	386	419	482	511	529	625	678	726
	790	827	857	898	917	935	950	956	976	1043	1047	1149
	1170	1171	1186	1194	1203	1232	1286	1324	1343	1384	1393	1425
	1436	1447	1478	1582	1610	1666	1711	1729	2990	3010	3076	3077
	3178	3186	3187	3189	3194	3203						
Gaussian 94:BP86/6-31G(d,p) (6D, 7F)												
	131	**148**	**258**	**343**	**376**	**408**	**472**	**490**	**540**	**574**	**672**	**682**
	732	**738**	**773**	**795**	**851**	**879**	**902**	**919**	**936**	**945**	**998**	**1014**
	1037	**1105**	**1141**	**1151**	**1154**	**1180**	**1201**	**1216**	**1268**	**1311**	**1328**	**1353**
	1388	**1429**	**1440**	**1446**	**1480**	**1572**	**1606**	**1644**	**2915**	**2930**	**3000**	**3007**
	3082	**3087**	**3092**	**3106**	**3108**	**3123**						

Principal moments of inertia/10^{-40} gm·cm^2

Method	I_a	I_b	I_c
PM3	287.045069	705.823469	971.169904
AM1	287.196513	709.403499	976.695482
AM1 UHF	287.869976	710.799718	978.980974
Gaussian 94[21]	**290.6046**	**723.79179**	**988.83363**
Dorofeeva and Gurvich[19]: $I_aI_bI_c=200\times10^{-114}$			

Enthalpy of formation/kcal·mol^{-1}

Method	$\Delta_f H°(298.15\ K)$
PM3	28.86
AM1	27.29
AM1 UHF (spin=0.00; $S^2=0.479326$)	26.54
Gaussian 94[21]	26.80
Pedley and Rylance[36]	**28.0**
Marinov[28]	31.59
Dorofeeva and Gurvich[19]	34.42

Zero Point Energy and Ionization Potential

Method	Zero point energy/kcal·mol^{-1}	Ionization potential/eV
PM3	8.836	105.739
AM1	8.8688	109.392
AM1 UHF	8.819	108.397
Gaussian 94[21]		103.605*

*zero point vibrational energy

dynamic values can be easily and quite accurately evaluated using Benson's group additivity method. Its IR spectrum is available in the NIST 97 WebBook.[1] These vibrations served for the calculation of the thermodynamic data. They were supplemented with values from the Gaussian 94 calculations. The internal rotation moments of inertia were calculated for ethyl-benzene using the Brinkmann and Burcat program.[6] The rotation barriers were taken from Benson[4] although Lagowski *et al.*[25] proposed a smaller one for the methyl rotor and a slightly bigger one for the ethyl rotor (see Table 2).

TABLE 10. Thermodynamic properties of $C_{10}H_{10}$ 1,2-dihydro-naphthalene (mol wt= 130.189 400)

T (K)	C_p (J/mol K)	H_T-H_{298} (kJ/mol)	S_T (J/mol K)	$-(G_T-H_{298})/T$ (J/mol K)	H_T (kJ/mol)	$\Delta_f H_T$ (kJ/mol)	Log K
0	-------	−22.797	-------	-------	94.355	147.231	-------
100	52.939	−18.792	264.626	452.551	98.360	135.626	−83.8171
200	93.401	−11.607	312.838	370.871	105.545	126.072	−49.3778
298.15	143.955	0.000	359.383	359.383	117.152	117.152	−38.8768
300	144.936	0.267	360.276	359.385	117.419	116.996	−38.7504
400	195.708	17.347	409.060	365.693	134.499	109.315	−33.8150
500	238.904	39.149	457.531	379.233	156.301	103.237	−31.0369
600	273.917	64.853	504.297	396.210	182.005	98.521	−29.2794
700	302.286	93.711	548.727	414.854	210.863	94.965	−28.0762
800	325.601	125.142	590.662	434.235	242.294	92.419	−27.2028
900	345.036	158.702	630.168	453.832	275.854	90.763	−26.5385
1000	361.410	194.047	667.393	473.345	311.199	89.848	−26.0144
1100	375.310	230.902	702.508	492.597	348.054	89.568	−25.5888
1200	387.175	269.042	735.687	511.485	386.194	89.807	−25.2339
1300	397.352	308.281	767.090	529.950	425.433	90.461	−24.9327
1400	406.118	348.465	796.865	547.962	465.617	91.425	−24.6712
1500	413.700	389.465	825.149	565.506	506.617	92.655	−24.4430
1600	420.284	431.172	852.064	582.581	548.324	94.067	−24.2402
1700	426.025	473.494	877.720	599.194	590.646	95.603	−24.0579
1800	431.051	516.353	902.216	615.353	633.505	97.232	−23.8934
1900	435.469	559.684	925.643	631.072	676.836	98.913	−23.7437
2000	439.367	603.430	948.080	646.366	720.582	100.618	−23.6062
2100	442.820	647.542	969.602	661.249	764.694	102.326	−23.4803
2200	445.890	691.981	990.275	675.738	809.133	103.999	−23.3635
2300	448.628	736.709	1010.157	689.848	853.861	105.647	−23.2554
2400	451.079	781.697	1029.303	703.596	898.849	107.240	−23.1550
2500	453.281	826.917	1047.762	716.996	944.069	108.750	−23.0606
2600	455.265	872.346	1065.580	730.062	989.498	110.203	−22.9725
2700	457.057	917.963	1082.796	742.809	1035.115	111.561	−22.8903
2800	458.681	963.752	1099.448	755.251	1080.904	112.829	−22.8130
2900	460.157	1009.695	1115.569	767.399	1126.847	113.997	−22.7397
3000	461.502	1055.779	1131.193	779.266	1172.931	115.035	−22.6704
3100	462.731	1101.991	1146.345	790.864	1219.143	115.998	−22.6062
3200	463.855	1148.321	1161.055	802.204	1265.473	116.823	−22.5448
3300	464.887	1194.759	1175.344	813.296	1311.911	117.530	−22.4867
3400	465.837	1241.296	1189.237	824.150	1358.448	118.117	−22.4318
3500	466.711	1287.924	1202.753	834.775	1405.076	118.560	−22.3802
3600	467.519	1334.636	1215.912	845.180	1451.788	118.886	−22.3306
3700	468.267	1381.426	1228.732	855.374	1498.578	119.066	−22.2842
3800	468.959	1428.288	1241.229	865.364	1545.440	119.108	−22.2396
3900	469.603	1475.216	1253.419	875.158	1592.368	119.016	−22.1980
4000	470.201	1522.207	1265.316	884.764	1639.359	118.756	−22.1578
4100	470.758	1569.255	1276.933	894.188	1686.407	118.379	−22.1205
4200	471.278	1616.357	1288.284	903.437	1733.509	117.841	−22.0847
4300	471.764	1663.509	1299.379	912.516	1780.661	117.143	−22.0502
4400	472.218	1710.709	1310.230	921.432	1827.861	116.262	−22.0176
4500	472.644	1757.952	1320.847	930.191	1875.104	115.260	−21.9872
4600	473.044	1805.237	1331.239	938.797	1922.389	114.110	−21.9582
4700	473.420	1852.560	1341.417	947.255	1969.712	112.818	−21.9308
4800	473.773	1899.920	1351.388	955.571	2017.072	111.377	−21.9052
4900	474.105	1947.314	1361.160	963.749	2064.466	109.791	−21.8809
5000	474.419	1994.740	1370.741	971.793	2111.892	107.957	−21.8571
5100	474.715	2042.197	1380.139	979.708	2159.349	106.092	−21.8361
5200	474.994	2089.683	1389.360	987.498	2206.835	104.017	−21.8152
5300	475.259	2137.195	1398.410	995.166	2254.347	101.790	−21.7957
5400	475.509	2184.734	1407.296	1002.716	2301.886	99.417	−21.7774
5500	475.746	2232.297	1416.023	1010.151	2349.449	96.896	−21.7601
5600	475.971	2279.883	1424.598	1017.476	2397.035	94.227	−21.7438
5700	476.185	2327.491	1433.024	1024.692	2444.643	91.418	−21.7288
5800	476.387	2375.119	1441.308	1031.804	2492.271	88.468	−21.7146
5900	476.580	2422.768	1449.453	1038.814	2539.920	85.381	−21.7012
6000	476.764	2470.435	1457.464	1045.725	2587.587	82.163	−21.6889

TABLE 11. Fundamental vibrations, moments of inertia and enthalpies of formation for the 2-hydro-naphthalene radical β-$C_{10}H_9$. The properties marked in bold were chosen for thermodynamic calculations

PM3												
	98.9	148	242	377	388	430	484	499	515	618	679	707
	776	794	817	872	874	907	913	962	968	1009	1036	1050
	1098	1117	1121	1152	1155	1181	1222	1268	1308	1339	1348	1381
	1447	1539	1608	1669	1762	1792	2912	2996	3047	3052	3055	3065
	3069	3078	3079									
AM1												
	107.9	158	250	395	404	444	496	521	535	643	686	738
	810	837	852	913	920	949	957	975	992	1005	1127	1142
	1176	1183	1200	1205	1214	1284	1314	1348	1353	1376	1415	1431
	1491	1572	1631	1686	1752	1775	2969	3051	3173	3182	3184	3190
	3191	3200	3203									
AM1 UHF												
	97.6	148	237	374	388	420	464	521	530	636	658	717
	781	821	827	879	907	912	934	946	956	967	1120	1137
	1165	1176	1193	1202	1212	1279	1315	1345	1358	1423	1466	1480
	1506	1543	1604	1641	1674	1692	2966	3049	3178	3186	3187	3192
	3193	3199	3202									
Gaussian 94: 6-31G(d,p) (6D, 7F)												
	125	**169**	**256**	**344**	**380**	**445**	**484**	**491**	**525**	**594**	**667**	**678**
	734	**734**	**761**	**764**	**831**	**886**	**891**	**899**	**900**	**928**	**949**	**1016**
	1029	**1112**	**1135**	**1137**	**1150**	**1185**	**1218**	**1260**	**1319**	**1353**	**1375**	**1397**
	1416	**1430**	**1473**	**1528**	**1575**	**1636**	**2843**	**2851**	**3082**	**3090**	**3093**	**3095**
	3106	**3110**	**3126**									

Method	Principal moments of inertia/10^{-40} gm·cm^2 I_a	I_b	I_c
PM3	277.786618	693.093408	965.636622
AM1	278.956887	695.379839	968.725626
AM1 UHF	280.975910	697.191357	972.698396
Gaussian 94[21] (S^2=0.7658)	**279.90458**	**719.11452**	**993.9347**

Method	Enthalpy of formation/kcal·mol^{-1} $\Delta_f H°$(298.15 K)
PM3	54.04
AM1	52.93
AM1 UHF (spin=0.5; S^2=1.380451)	39.51
Gaussian 94[21] BP86/6-31G	54.556
Marinov[28]	**54.86**

Method	Zero Point Energy and Ionization Potential Zero point energy/kcal·mol^{-1}	Ionization potential/eV
PM3	7.465	97.190
AM1	7.360	101.069
AM1 UHF	8.276	100.070
Gaussian 94 BP86/6-31g		95.171*

*zero point vibrational energy

The S^2=0.7798 shows a close to doublet condition, thus this is an UHF unstable molecule.[44] The enthalpy of formation predicted by Benson's method,[35] in close agreement with that of Stull *et al.*,[46] was adopted. Table 17 lists all the literature and calculated molecular vibrations, moments of inertia and enthalpies of formation of 1-ethyl-naphthalene. Table 18 lists the thermodynamic data of 1-ethylnaphthalene.

3.9. 1-Naphthalene α-Ethyl-Radical: $C_{10}H_7CH_2$–CH_2·

This radical is not mentioned in the literature. The internal rotation moments of inertia were calculated for ethyl benzene radical using the Brinkmann and Burcat program[6] (see Table 2). S^2=1.561 shows a condition between a doublet and a triplet. Thus this radical is also UHF

TABLE 12. Thermodynamic properties of the $C_{10}H_9 \cdot$ 2-hydro-naphthalene radical (mol wt= 129.181 460)

T (K)	C_p (J/mol K)	H_T-H_{298} (kJ/mol)	S_T (J/mol K)	$-(G_T-H_{298})/T$ (J/mol K)	H_T (kJ/mol)	$\Delta_f H_T$ (kJ/mol)	Log K
0	-------	−22.643	-------	-------	206.891	255.533	-------
100	52.139	−18.674	269.613	456.354	210.860	245.392	−138.2604
200	92.913	−11.564	317.284	375.106	217.970	237.109	−75.0261
298.15	143.289	0.000	363.659	363.659	229.534	229.534	−54.9290
300	144.249	0.266	364.548	363.661	229.800	229.404	−54.6811
400	193.266	17.198	412.919	369.925	246.732	223.028	−44.8266
500	234.155	38.642	460.600	383.317	268.176	218.052	−39.0649
600	266.901	63.756	506.298	400.038	293.290	214.212	−35.3008
700	293.218	91.808	549.488	418.334	321.342	211.318	−32.6547
800	314.719	122.239	590.092	437.293	351.774	209.249	−30.6937
900	332.565	154.630	628.222	456.411	384.164	207.911	−29.1807
1000	347.551	188.657	664.059	475.402	418.191	207.180	−27.9762
1100	360.243	224.064	697.796	494.101	453.598	206.971	−26.9932
1200	371.058	260.643	729.617	512.414	490.178	207.189	−26.1738
1300	380.322	298.224	759.693	530.290	527.758	207.745	−25.4797
1400	388.292	336.665	788.177	547.702	566.199	208.548	−24.8818
1500	395.181	375.847	815.207	564.642	605.381	209.563	−24.3625
1600	401.159	415.671	840.907	581.112	645.205	210.718	−23.9055
1700	406.370	456.053	865.387	597.120	685.587	211.961	−23.4995
1800	410.930	496.923	888.746	612.678	726.457	213.268	−23.1366
1900	414.936	538.220	911.073	627.800	767.755	214.601	−22.8100
2000	418.471	579.894	932.449	642.501	809.429	215.940	−22.5137
2100	421.600	621.901	952.943	656.800	851.435	217.264	−22.2446
2200	424.382	664.203	972.621	670.711	893.737	218.540	−21.9981
2300	426.864	706.767	991.542	684.252	936.302	219.780	−21.7719
2400	429.085	749.567	1009.757	697.437	979.101	220.955	−21.5637
2500	431.079	792.577	1027.314	710.283	1022.111	222.039	−21.3705
2600	432.876	835.776	1044.257	722.804	1065.310	223.062	−21.1916
2700	434.499	879.146	1060.625	735.015	1108.680	223.984	−21.0256
2800	435.970	922.671	1076.453	746.928	1152.205	224.812	−20.8707
2900	437.307	966.336	1091.776	758.557	1195.870	225.538	−20.7255
3000	438.525	1010.128	1106.622	769.913	1239.663	226.134	−20.5894
3100	439.637	1054.037	1121.020	781.008	1283.572	226.652	−20.4629
3200	440.656	1098.053	1134.994	791.852	1327.587	227.033	−20.3434
3300	441.590	1142.166	1148.568	802.457	1371.700	227.297	−20.2309
3400	442.450	1186.368	1161.764	812.832	1415.902	227.440	−20.1249
3500	443.242	1230.653	1174.601	822.986	1460.188	227.441	−20.0255
3600	443.973	1275.015	1187.098	832.927	1504.549	227.329	−19.9308
3700	444.650	1319.446	1199.272	842.664	1548.980	227.071	−19.8420
3800	445.277	1363.943	1211.138	852.206	1593.477	226.679	−19.7574
3900	445.859	1408.500	1222.712	861.558	1638.034	226.156	−19.6779
4000	446.400	1453.113	1234.007	870.729	1682.647	225.468	−19.6019
4100	446.905	1497.779	1245.036	879.724	1727.313	224.667	−19.5307
4200	447.376	1542.493	1255.811	888.551	1772.027	223.710	−19.4627
4300	447.815	1587.253	1266.343	897.215	1816.787	222.596	−19.3977
4400	448.227	1632.055	1276.643	905.721	1861.589	221.304	−19.3360
4500	448.612	1676.897	1286.720	914.076	1906.432	219.896	−19.2779
4600	448.974	1721.777	1296.584	922.285	1951.311	218.344	−19.2226
4700	449.314	1766.691	1306.244	930.352	1996.226	216.654	−19.1700
4800	449.634	1811.639	1315.707	938.282	2041.173	214.822	−19.1204
4900	449.935	1856.618	1324.981	946.079	2086.152	212.848	−19.0732
5000	450.218	1901.625	1334.074	953.749	2131.160	210.632	−19.0275
5100	450.486	1946.661	1342.992	961.294	2176.195	208.389	−18.9854
5200	450.739	1991.722	1351.742	968.719	2221.256	205.941	−18.9445
5300	450.979	2036.808	1360.330	976.027	2266.342	203.345	−18.9057
5400	451.205	2081.918	1368.762	983.222	2311.452	200.607	−18.8689
5500	451.420	2127.049	1377.043	990.307	2356.583	197.725	−18.8339
5600	451.623	2172.201	1385.179	997.286	2401.735	194.699	−18.8005
5700	451.817	2217.373	1393.174	1004.161	2446.907	191.537	−18.7691
5800	452.000	2262.564	1401.034	1010.936	2492.098	188.237	−18.7390
5900	452.175	2307.773	1408.762	1017.614	2537.307	184.803	−18.7105
6000	452.341	2352.999	1416.363	1024.197	2582.533	181.240	−18.6835

TABLE 13. Fundamental vibrations, moments of inertia and enthalpies of formation for methyl-naphthalene 1-$C_{10}H_7CH_3$. The properties marked in bold were chosen for thermodynamic calculations

PM3												
	109	135	162	224	301	377	431	462	488	515	524	574
	595	744	783	788	809	824	884	911	919	964	991	992
	1009	1028	1099	1107	1127	1140	1162	1183	1212	1232	1295	1373
	1402	1407	1440	1485	1491	1580	1612	1690	1782	1801	1828	3045
	3050	3050	3055	3064	3068	3070	3073	3077	3167			
AM1												
	113	141	168	231	302	390	443	478	516	524	550	581
	623	762	808	834	845	870	914	945	959	974	996	1004
	1050	1072	1168	1182	1194	1209	1216	1263	1301	1329	1367	1382
	1389	1443	1472	1524	1529	1608	1636	1705	1763	1796	1805	3046
	3055	3148	3179	3181	3183	3186	3189	3196	3199			
AM1 UHF												
	108	136	162	219	300	369	425	474	493	510	543	554
	615	733	783	814	824	859	881	910	938	948	959	969
	1043	1058	1163	1175	1187	1205	1211	1257	1296	1324	1380	1388
	1404	1442	1455	1505	1516	1521	1599	1654	1677	1702	1709	3044
	3054	3146	3182	3182	3185	3188	3190	3197	3199			
IR from the NIST Webbook												
									460	**490**	**532**	**537**
		699	711	771	787	(787)			**858**			
	960	**1022**			**1077**	**1084**	**1102**	**1109**	**1166**	**1211**		
	1261		**1398**	**1447**	**1470**	**1512**	**1601**	**1680**	**1744**	**1795**	**1820**	**1856**
	1924	**2321**	**2749**	**2878**	**2956**	**2982**	**3016**	**3074**	**3107**			
Gaussian 94 BP86/6-31G(d,p) (6D, 7F)												
	131	**161**	**179**	**241**	**269**	**404**	**427**	**462**	468	504	528	560
	616	694	719	761	779	780	**840**	**846**	874	**914**	**934**	**948**
	962	1024	**1026**	**1049**	1077	1139	1153	1161	1218	1232	**1252**	**1360**
	1371	**1384**	1397	1431	1447	1456	1467	1515	1583	1601	1624	2959
	3016	3055	3092	3093	3099	3104	3117	3119	3127			

Method	Principal moments of inertia/10^{-40} gm·cm^2 I_a	I_b	I_c
PM3	437.673578	742.882899	1175.267861
AM1	**439.442164**	**743.379622**	**1177.309994**
AM1 UHF	440.871632	746.613514	1181.972464
Gaussian 94[21]	448.31622	754.91208	1197.9544

Toluene data from Melius: $I_r(-CH_3)=$ **5.1387** and V(3)= **10**.cal·mol^{-1} and $\sigma_r=3$

Method	Enthalpy of formation/kcal·mol^{-1} $\Delta_f H°$(298.15 K)
PM3	32.62
AM1	33.96
AM1 UHF (spin=0.0; $S^2=0.781286$)	31.90
NIST 94[35]	28.0
NIST 97[34]	**27.75±0.62**
Gaussian 94[21] BP86/6-31G	22.34
Marinov[28]	29.66
Sabbah *et al.*[41]	27.0±0.5
Stull *et al.*[46]	27.93

Method	Zero Point Energy and Ionization Potential Zero point energy/kcal·mol^{-1}	Ionization potential/eV
PM3	109.741	
AM1	112.910	8.583
AM1 UHF	111.940	8.819
Gaussian 94 BP86/6-31g[21]	106.859*	
Sabbah *et al.*[41]		7.96±0.1

*zero point vibrational energy

TABLE 14. Thermodynamic properties of 1-$C_{10}H_7CH_3$ 1-methyl-naphthalene (mol wt=142.190)

T (K)	C_p (J/mol K)	H_T-H_{298} (kJ/mol)	S_T (J/mol K)	$-(G_T-H_{298})/T$ (J/mol K)	H_T (kJ/mol)	$\Delta_f H_T$ (kJ/mol)	Log K
0	------	−25.026	-------	-------	91.080	145.009	-------
100	57.316	−20.682	277.153	483.976	95.424	133.682	−82.1965
200	103.187	−12.790	330.044	393.996	103.316	124.507	−48.2311
298.15	157.922	0.000	381.348	381.348	116.106	116.106	−37.8458
300	158.960	0.293	382.328	381.351	116.399	115.960	−37.7205
400	212.155	18.905	435.504	388.241	135.011	108.788	−32.8198
500	257.339	42.452	487.859	402.956	158.558	103.127	−30.0503
600	294.338	70.099	538.163	421.332	186.205	98.778	−28.2916
700	324.501	101.091	585.879	441.462	217.197	95.584	−27.0830
800	349.232	134.818	630.878	462.355	250.924	93.412	−26.2022
900	369.662	170.795	673.228	483.457	286.901	92.138	−25.5295
1000	386.659	208.636	713.083	504.446	324.742	91.595	−24.9963
1100	400.891	248.034	750.622	525.137	364.140	91.665	−24.5616
1200	412.879	288.740	786.033	545.417	404.846	92.219	−24.1978
1300	423.033	330.549	819.493	565.225	446.655	93.145	−23.8881
1400	431.682	373.296	851.168	584.528	489.402	94.332	−23.6185
1500	439.089	416.844	881.210	603.314	532.950	95.737	−23.3829
1600	445.466	461.080	909.757	621.582	577.186	97.273	−23.1733
1700	450.984	505.909	936.933	639.339	622.015	98.885	−22.9848
1800	455.783	551.253	962.849	656.598	667.359	100.542	−22.8146
1900	459.977	597.045	987.607	673.373	713.151	102.206	−22.6599
2000	463.658	643.231	1011.296	689.681	759.337	103.853	−22.5178
2100	466.904	689.763	1033.999	705.540	805.869	105.461	−22.3880
2200	469.779	736.600	1055.787	720.969	852.706	106.996	−22.2677
2300	472.334	783.708	1076.727	735.984	899.814	108.470	−22.1566
2400	474.614	831.057	1096.878	750.604	947.163	109.856	−22.0536
2500	476.656	878.623	1116.295	764.846	994.729	111.125	−21.9570
2600	478.491	926.382	1135.026	778.725	1042.488	112.310	−21.8671
2700	480.146	974.315	1153.116	792.259	1090.421	113.369	−21.7835
2800	481.642	1022.405	1170.605	805.461	1138.511	114.311	−21.7051
2900	482.999	1070.639	1187.531	818.345	1186.745	115.128	−21.6309
3000	484.234	1119.001	1203.926	830.926	1235.107	115.789	−21.5610
3100	485.360	1167.482	1219.823	843.216	1283.588	116.353	−21.4965
3200	486.389	1216.070	1235.249	855.227	1332.176	116.756	−21.4350
3300	487.332	1264.757	1250.231	866.971	1380.863	117.021	−21.3771
3400	488.199	1313.534	1264.792	878.458	1429.640	117.144	−21.3225
3500	488.997	1362.394	1278.955	889.700	1478.500	117.102	−21.2715
3600	489.733	1411.331	1292.741	900.705	1527.437	116.927	−21.2226
3700	490.413	1460.339	1306.169	911.483	1576.445	116.584	−21.1770
3800	491.043	1509.412	1319.256	922.042	1625.518	116.087	−21.1335
3900	491.628	1558.546	1332.019	932.391	1674.652	115.438	−21.0930
4000	492.171	1607.736	1344.472	942.538	1723.842	114.603	−21.0541
4100	492.677	1656.979	1356.632	952.490	1773.085	113.637	−21.0183
4200	493.149	1706.271	1368.510	962.255	1822.377	112.492	−20.9840
4300	493.589	1755.608	1380.119	971.838	1871.714	111.171	−20.9511
4400	494.001	1804.988	1391.471	981.247	1921.094	109.648	−20.9201
4500	494.387	1854.407	1402.577	990.487	1970.513	107.993	−20.8916
4600	494.749	1903.864	1413.447	999.564	2019.970	106.174	−20.8645
4700	495.088	1953.356	1424.091	1008.483	2069.462	104.201	−20.8391
4800	495.408	2002.881	1434.518	1017.251	2118.987	102.066	−20.8156
4900	495.708	2052.437	1444.736	1025.871	2168.543	99.772	−20.7935
5000	495.992	2102.022	1454.753	1034.349	2218.128	97.207	−20.7718
5100	496.259	2151.635	1464.578	1042.689	2267.741	94.609	−20.7531
5200	496.511	2201.273	1474.217	1050.895	2317.379	91.782	−20.7346
5300	496.750	2250.937	1483.677	1058.972	2367.043	88.789	−20.7175
5400	496.976	2300.623	1492.964	1066.923	2416.729	85.637	−20.7017
5500	497.190	2350.331	1502.085	1074.752	2466.437	82.324	−20.6869
5600	497.393	2400.061	1511.046	1082.463	2516.167	78.850	−20.6731
5700	497.585	2449.809	1519.851	1090.060	2565.915	75.223	−20.6607
5800	497.768	2499.577	1528.506	1097.545	2615.683	71.442	−20.6491
5900	497.942	2549.363	1537.017	1104.922	2665.469	67.510	−20.6384
6000	498.107	2599.165	1545.387	1112.193	2715.271	63.436	−20.6288

TABLE 15. Fundamental vibrations, moments of inertia and enthalpies of formation for the 1-naphthyl-methyl radical $C_{10}H_7CH_2\cdot$ The properties marked in bold were chosen for thermodynamic calculations

PM3												
	107	151	212	362	374	420	477	486	499	522	530	584
	600	729	783	793	808	831	874	905	912	940	973	982
	987	1015	1110	1115	1127	1139	1163	1188	1234	1243	1263	1315
	1387	1416	1491	1555	1602	1643	1708	1762	1813	3007	3049	3052
	3059	3062	3071	3076	3099	3154						
AM1												
	84	155	219	347	384	419	485	489	511	521	545	600
	625	747	817	834	837	870	906	926	953	973	980	987
	1004	1018	1179	1187	1196	1209	1213	1263	1300	1315	1326	1383
	1446	1459	1530	1584	1619	1663	1712	1744	1795	3180	3180	3181
	3188	3189	3192	3196	3199	3227						
AM1 UHF												
	83.8	151	210	341	363	380	442	478	485	506	538	570
	616	722	785	799	828	857	868	887	902	932	940	941
	964	1010	1171	1178	1190	1204	1213	1258	1309	1334	1406	1445
	1477	1502	1514	1542	1585	1620	1658	1661	1692	3182	3184	3185
	3187	3191	3196	3197	3200	3229						
Gaussian 94 BP86/6-31G(d,p) (6D, 7F)												
	95.8	**169**	**232**	**303**	**396**	**433**	**436**	**467**	**492**	**493**	**547**	**566**
	619	**701**	**710**	**718**	**753**	**775**	**779**	**834**	**850**	**862**	**907**	**927**
	941	**943**	**1032**	**1075**	**1090**	**1135**	**1151**	**1168**	**1214**	**1230**	**1282**	**1347**
	1362	**1395**	**1433**	**1439**	**1486**	**1500**	**1537**	**1559**	**1610**	**3094**	**3096**	**3099**
	3105	**3106**	**3118**	**3121**	**3128**	**3193**						

Principal moments of inertia/10^{-40} gm·cm^2

Method	I_a	I_b	I_c
PM3	418.135852	735.240520	1153.374590
AM1	**418.986174**	**743.823227**	**1162.722486**
AM1 UHF	421.665465	746.864213	1168.505596
Gaussian 94[21]	425.6682	757.71704	1183.3852

Enthalpy of formation/kcal·mol^{-1}

Method	$\Delta_f H°$(298.15 K)
PM3	69.65
AM1	71.36
AM1 UHF (spin=0.5; S^2=1.6299)	54.034
Gaussian 94[21] BP86/6-31G	57.18
NIST 94[35]	**65.2**
McMillan and Golden[30]	60.4
Marinov[28]	67.95

Zero Point Energy and Ionization Potential

Method	Zero point energy/kcal·mol^{-1}	Ionization potential/eV
PM3	101.129	7.529
AM1	104.491	8.552
AM1 UHF	103.388	
Gaussian 94[21]	98.714*	
McMillan and Golden[30]		7.35±1.

*zero point vibrational energy

unstable.[44] Table 19 lists all the literature and calculated molecular vibrations, moments of inertia, and enthalpies of formation of 1-naphthalene α-ethyl radical. Table 20 lists the thermodynamic data of 1-naphthalene α-ethyl radical.

3.10. 1-Naphthalene β-Ethyl Radical: $C_{10}H_7C\cdot H-CH_3$

This radical is not mentioned in the literature. The PM3-UHF calculation was optimized on a transition state rather

TABLE 16. Thermodynamic properties of the 1-$C_{10}H_7CH_2$· 1-naphthyl methyl radical (mol wt=141.192 460)

T (K)	C_p (J/mol K)	H_T-H_{298} (kJ/mol)	S_T (J/mol K)	$-(G_T-H_{298})/T$ (J/mol K)	H_T (kJ/mol)	$\Delta_f H_T$ (kJ/mol)	Log K
0	-------	−24.645	-------	-------	248.151	297.846	-------
100	55.120	−20.530	275.730	481.028	252.267	287.791	−160.1363
200	102.697	−12.795	327.457	391.431	260.002	279.806	−85.8064
298.15	158.090	0.000	378.770	378.770	272.797	272.797	−62.0183
300	159.119	0.293	379.752	378.774	273.090	272.678	−61.7237
400	210.915	18.864	432.819	385.658	291.661	266.918	−49.9732
500	253.418	42.161	484.628	400.306	314.958	262.468	−43.0587
600	287.144	69.254	533.931	418.507	342.051	259.029	−38.5178
700	314.078	99.364	580.292	438.344	372.161	256.421	−35.3125
800	335.996	131.903	623.710	458.831	404.700	254.539	−32.9300
900	354.152	166.438	664.365	479.434	439.235	253.310	−31.0880
1000	369.394	202.637	702.490	499.853	475.434	252.626	−29.6198
1100	382.312	240.240	738.319	519.920	513.036	252.420	−28.4210
1200	393.335	279.036	772.070	539.540	551.833	252.604	−27.4218
1300	402.792	318.855	803.937	558.664	591.651	253.100	−26.5758
1400	410.942	359.551	834.092	577.270	632.348	253.818	−25.8477
1500	417.998	401.007	862.691	595.353	673.803	254.734	−25.2161
1600	424.131	443.120	889.868	612.918	715.917	255.774	−24.6609
1700	429.484	485.807	915.745	629.976	758.604	256.890	−24.1685
1800	434.175	528.995	940.429	646.543	801.792	258.059	−23.7290
1900	438.301	572.623	964.017	662.636	845.420	259.244	−23.3341
2000	441.945	616.639	986.593	678.274	889.436	260.426	−22.9765
2100	445.176	660.998	1008.236	693.475	933.795	261.584	−22.6522
2200	448.049	705.662	1029.013	708.257	978.459	262.686	−22.3557
2300	450.614	750.598	1048.987	722.640	1023.395	263.743	−22.0840
2400	452.912	795.776	1068.215	736.641	1068.573	264.728	−21.8344
2500	454.977	841.172	1086.746	750.277	1113.969	265.613	−21.6031
2600	456.838	886.765	1104.627	763.564	1159.562	266.430	−21.3892
2700	458.521	932.534	1121.901	776.518	1205.331	267.137	−21.1910
2800	460.046	978.464	1138.604	789.153	1251.260	267.742	−21.0065
2900	461.433	1024.539	1154.772	801.483	1297.336	268.237	−20.8337
3000	462.697	1070.746	1170.437	813.522	1343.543	268.592	−20.6720
3100	463.851	1117.074	1185.628	825.281	1389.871	268.863	−20.5217
3200	464.909	1163.513	1200.372	836.774	1436.310	268.987	−20.3800
3300	465.880	1210.053	1214.693	848.010	1482.850	268.986	−20.2469
3400	466.773	1256.687	1228.614	859.000	1529.483	268.856	−20.1215
3500	467.596	1303.406	1242.157	869.755	1576.202	268.574	−20.0040
3600	468.356	1350.204	1255.340	880.283	1623.000	268.172	−19.8924
3700	469.060	1397.075	1268.182	890.594	1669.872	267.614	−19.7875
3800	469.712	1444.014	1280.700	900.696	1716.811	266.913	−19.6879
3900	470.318	1491.016	1292.909	910.597	1763.813	266.072	−19.5943
4000	470.881	1538.076	1304.823	920.304	1810.873	265.057	−19.5050
4100	471.406	1585.191	1316.457	929.825	1857.988	263.921	−19.4213
4200	471.896	1632.356	1327.823	939.167	1905.153	262.619	−19.3414
4300	472.354	1679.569	1338.932	948.335	1952.366	261.150	−19.2652
4400	472.783	1726.826	1349.797	957.336	1999.623	259.491	−19.1928
4500	473.184	1774.125	1360.426	966.176	2046.921	257.709	−19.1247
4600	473.561	1821.462	1370.830	974.860	2094.259	255.775	−19.0599
4700	473.915	1868.836	1381.018	983.394	2141.633	253.695	−18.9984
4800	474.248	1916.244	1390.999	991.782	2189.041	251.463	−18.9403
4900	474.561	1963.685	1400.781	1000.029	2236.482	249.081	−18.8850
5000	474.857	2011.156	1410.372	1008.141	2283.953	246.438	−18.8315
5100	475.136	2058.656	1419.778	1016.120	2331.453	243.772	−18.7823
5200	475.400	2106.183	1429.007	1023.972	2378.980	240.884	−18.7344
5300	475.649	2153.735	1438.065	1031.700	2426.532	237.838	−18.6890
5400	475.885	2201.312	1446.958	1039.307	2474.109	234.641	−18.6460
5500	476.109	2248.912	1455.692	1046.799	2521.709	231.290	−18.6050
5600	476.321	2296.533	1464.273	1054.177	2569.330	227.786	−18.5659
5700	476.523	2344.176	1472.705	1061.446	2616.973	224.135	−18.5291
5800	476.714	2391.838	1480.994	1068.609	2664.634	220.335	−18.4940
5900	476.896	2439.518	1489.145	1075.667	2712.315	216.391	−18.4606
6000	477.069	2487.217	1497.162	1082.626	2760.013	212.309	−18.4290

TABLE 17. Fundamental vibrations, moments of inertia and enthalpies of formation for I-$C_{10}H_7CH_2CH_3$ 1-ethyl naphthalene. The properties marked in bold were chosen for thermodynamic calculations

PM3											
47.6	97	160.5	166.8	184.9	302.6	371	401	431	468	492	523
527	589	634	747	777	789	812	820	847	897	918	928
969	995	1005	1016	1058	1099	1107	1115	1125	1132	1145	1167
1182	1222	1264	1297	1331	1403	1407	1411	1434	1468	1486	1502
1585	1609	1691	1784	1800	1827	2933	3018	3019	3049	3052	3055
3063	3073	3076	3081	3088	3183						
AM1 UHF											
73.3	97.9	146.5	162	180	284	331	397	430	471	495	512
542	601	635	741	790	810	822	839	865	886	913	939
949	961	969	1045	1088	1163	1175	1188	1191	1206	1210	1225
1258	1289	1317	1373	1389	1397	1414	1431	1434	1455	1506	1517
1520	1597	1652	1673	1703	1711	3006	3061	3065	3084	3157	3181
3182	3185	3186	3190	3197	3200						
IR Spectrum NIST 1997											
										478	**527**
553	**578**	**630**	**641**	**703**	**734**					**862**	**893**
			960	**1017**	**1069**						**1172**
			1259	**1326**				**1399**			
	1476	**1512**	**1600**	**1636**	**1682**	**1796**	**1832**	**1863**	**1919**	**2894**	**2950**
2981	**3074**	**3172**	**3229**	**3265**	**3353**						
Gaussian 94 BP86/6-31G(d,p) (6D, 7F)											
84.8	98.5	**171**	**186**	**203**	**289**	**316**	**421**	**429**	**462**	474	505
547	572	637	687	720	762	**768**	**784**	**786**	**838**	844	878
914	**933**	**938**	947	1000	**1031**	**1048**	1070	**1087**	**1140**	**1154**	1161
1216	**1226**	**1246**	1250	1310	**1366**	**1369**	**1382**	1397	**1437**	**1456**	**1458**
1460	1475	1515	1581	1600	1624	2966	2972	3004	3050	3056	3089
3092	3097	3104	3118	3119	3129						

Method	Principal moments of inertia/10^{-40} gm·cm^2 I_a	I_b	I_c
PM3	565.180057	969.329472	1466.909314
AM1			
AM1 UHF	605.786979	909.043104	1448.496422
Gaussian 94[21]	**615.40903**	**929.00467**	**1471.6558**

Brinkmann and Burcat[6]: $I_r(-C_2H_5)=$ **44.72813**; ROSYM=**2**; $V(3)=$ **2.8** kcal·mol^{-1} [Benson]
Brinkmann and Burcat[6]: $I_r(-CH_3)=$ **4.17138**; ROSYM=**3**; $V(3)=$ **2.8** kcal·mol^{-1} [Benson]

Method	Enthalpy of formation/kcal·mol^{-1} $\Delta_f H°(0\ K)$	$\Delta_f H°(298.15\ K)$	$\Delta_f H°(300\ K)$
PM3		27.56	
AM1			
AM1 UHF (spin=0.0; $S^2=0.779839$)		26.69	
Gaussian 94[21]		18.45	
NIST 94 [35]		**23.2**	
Marinov[28]		24.80	
Stull *et al.*[46]		**23.16**	

Method	Zero Point Energy and Ionization Potential Zero point energy/kcal·mol^{-1}	Ionization potential/eV
PM3	127.633	8.719
AM1		
AM1 UHF	129.647	8.831
Gaussian 94[21] BP86/6-31G	124.441*	

*zero point vibrational energy

TABLE 18. Thermodynamic properties of 1-$C_{10}H_7CH_2CH_3$ 1-ethyl naphthalene (mol wt=156.227 280)

T (K)	C_p (J/mol K)	H_T-H_{298} (kJ/mol)	S_T (J/mol K)	$-(G_T-H_{298})/T$ (J/mol K)	H_T (kJ/mol)	$\Delta_f H_T$ (kJ/mol)	Log K
0	-------	−28.629	-------	-------	68.273	131.723	-------
100	66.359	−24.076	284.856	525.612	72.826	117.545	−78.6758
200	120.637	−14.826	346.824	420.955	82.075	106.707	−49.1037
298.15	181.943	0.000	406.323	406.323	96.901	96.901	−40.3022
300	183.107	0.338	407.452	406.327	97.239	96.732	−40.1976
400	243.236	21.710	468.521	414.246	118.611	88.392	−36.1582
500	294.913	48.697	528.527	431.132	145.599	81.921	−33.9320
600	337.258	80.379	586.173	452.207	177.281	77.101	−32.5468
700	371.587	115.881	640.831	475.287	212.783	73.705	−31.6092
800	399.549	154.485	692.338	499.232	251.386	71.536	−30.9326
900	422.534	195.626	740.768	523.406	292.527	70.418	−30.4181
1000	441.601	238.861	786.304	547.442	335.763	70.141	−30.0103
1100	457.545	283.842	829.163	571.125	380.743	70.560	−29.6766
1200	470.970	330.286	869.566	594.328	427.188	71.524	−29.3956
1300	482.344	377.968	907.725	616.981	474.869	72.903	−29.1545
1400	492.035	426.699	943.835	639.050	523.601	74.570	−28.9422
1500	500.336	476.328	978.072	660.520	573.230	76.475	−28.7553
1600	507.482	526.728	1010.597	681.392	623.629	78.521	−28.5871
1700	513.662	577.793	1041.553	701.675	674.694	80.643	−28.4340
1800	519.031	629.433	1071.068	721.383	726.335	82.807	−28.2946
1900	523.717	681.576	1099.259	740.535	778.477	84.970	−28.1666
2000	527.823	734.137	1126.229	759.150	831.059	87.103	−28.0479
2100	531.437	787.124	1152.071	777.250	884.026	89.184	−27.9387
2200	534.628	840.431	1176.869	794.855	937.332	91.172	−27.8365
2300	537.458	894.038	1200.698	811.985	990.939	93.083	−27.7414
2400	539.976	947.912	1223.626	828.662	1044.813	94.883	−27.6529
2500	542.224	1002.024	1245.715	844.905	1098.925	96.543	−27.5691
2600	544.237	1056.349	1267.021	860.733	1153.250	98.097	−27.4908
2700	546.046	1110.865	1287.596	876.164	1207.766	99.500	−27.4177
2800	547.677	1165.552	1307.484	891.215	1262.454	100.764	−27.3488
2900	549.151	1220.395	1326.729	905.903	1317.296	101.876	−27.2831
3000	550.486	1275.378	1345.369	920.243	1372.279	102.805	−27.2210
3100	551.699	1330.488	1363.439	934.250	1427.389	103.615	−27.1638
3200	552.805	1385.714	1380.973	947.937	1482.615	104.234	−27.1090
3300	553.814	1441.046	1397.999	961.319	1537.947	104.690	−27.0572
3400	554.738	1496.474	1414.546	974.407	1593.375	104.978	−27.0083
3500	555.585	1551.991	1430.639	987.213	1648.892	105.072	−26.9626
3600	556.363	1607.589	1446.301	999.749	1704.490	105.008	−26.9186
3700	557.081	1663.261	1461.555	1012.025	1760.163	104.748	−26.8778
3800	557.742	1719.003	1476.420	1024.051	1815.904	104.306	−26.8386
3900	558.354	1774.808	1490.916	1035.837	1871.710	103.687	−26.8023
4000	558.921	1830.672	1505.059	1047.391	1927.574	102.850	−26.7672
4100	559.446	1886.591	1518.867	1058.723	1983.492	101.859	−26.7352
4200	559.935	1942.560	1532.354	1069.840	2039.462	100.660	−26.7045
4300	560.390	1998.577	1545.535	1080.750	2095.478	99.256	−26.6750
4400	560.813	2054.637	1558.423	1091.460	2151.539	97.620	−26.6473
4500	561.209	2110.739	1571.031	1101.978	2207.640	95.827	−26.6220
4600	561.579	2166.878	1583.370	1112.309	2263.780	93.845	−26.5980
4700	561.925	2223.053	1595.451	1122.461	2319.955	91.682	−26.5756
4800	562.250	2279.262	1607.285	1132.438	2376.164	89.330	−26.5550
4900	562.554	2335.503	1618.881	1142.248	2432.404	86.794	−26.5358
5000	562.840	2391.773	1630.249	1151.895	2488.674	83.952	−26.5169
5100	563.110	2448.070	1641.398	1161.384	2544.972	81.064	−26.5011
5200	563.363	2504.394	1652.335	1170.720	2601.296	77.915	−26.4852
5300	563.602	2560.742	1663.068	1179.909	2657.644	74.575	−26.4708
5400	563.828	2617.114	1673.605	1188.954	2714.016	71.052	−26.4576
5500	564.041	2673.508	1683.953	1197.860	2770.409	67.345	−26.4454
5600	564.243	2729.922	1694.118	1206.632	2826.823	63.454	−26.4341
5700	564.434	2786.356	1704.106	1215.272	2883.257	59.388	−26.4243
5800	564.615	2842.808	1713.924	1223.785	2939.710	55.146	−26.4152
5900	564.786	2899.278	1723.578	1232.174	2996.180	50.733	−26.4070
6000	564.949	2955.765	1733.071	1240.444	3052.667	46.158	−26.4000

TABLE 19. Fundamental vibrations, moments of inertia and enthalpies of formation for the 1-ethyl naphthalene-α-radical $C_{10}H_7CH_2-CH_2\cdot$. The properties marked in bold were chosen for thermodynamic calculations

AM1											
51	74.5	128	164	221	229	361	384	442	480	520	526
565	577	635	732	762	796	824	842	856	893	921	947
963	975	996	1003	1072	1143	1163	1184	1200	1208	1219	1258
1269	1303	1329	1334	1386	1392	1453	1473	1521	1533	1605	1636
1702	1763	1797	1805	2994	3067	3179	3180	3183	3184	3189	3195
3199	3232	3243									
AM1 UHF											
43.4	100.5	118	157.3	210	226	355	366	424	476	491	517
545	564	625	726	736	775	806	818	842	875	890	911
938	950	959	968	1060	1133	1156	1177	1194	1204	1214	1257
1262	1295	1326	1364	1380	1406	1451	1460	1505	1514	1524	1597
1651	1672	1702	1709	2968	3051	3177	3182	3185	3186	3190	3196
3199	3223	3237									
Gaussian 94:BP86/6-31G(d,p) (6D, 7F)											
60.8	128	**154**	**170**	**202**	**233**	**319**	**400**	**426**	**462**	**472**	**508**
514	**527**	**589**	**617**	**692**	**717**	**757**	**778**	**781**	**806**	**836**	**850**
887	**913**	**936**	**946**	**975**	**1022**	**1031**	**1075**	**1083**	**1139**	**1154**	**1159**
1180	**1217**	**1220**	**1246**	**1289**	**1362**	**1380**	**1397**	**1411**	**1429**	**1435**	**1456**
1514	**1581**	**1599**	**1623**	**2859**	**2954**	**3088**	**3092**	**3094**	**3103**	**3104**	**3118**
3119	**3128**	**3193**									

Method	Principal moments of inertia/10^{-40} gm·cm^2 I_a	I_b	I_c
PM3			
AM1	506.122933	1023.277403	1518.502711
AM1 UHF	507.139525	1027.446913	1523.178697
Gaussian 94[21]	**516.27582**	**1051.585**	**1555.2185**

Brinkmann and Burcat[6]: I_r ($-CH_2CH_2\cdot$)=**36.8853**; ROSYM=**2**; V(3)=**3.0** kcal·mol^{-1} [Benson]
Brinkmann and Burcat[6]: I_r ($-CH_2\cdot$)=**2.76582**; ROSYM=**2**; V(3)=**3.0** kcal·mol^{-1} [Benson]

Method	Enthalpy of formation/kcal·mol^{-1} $\Delta_f H°$(0 K)	$\Delta_f H°$(298.15 K)	$\Delta_f H°$(300 K)
PM3			
AM1	65.05		
AM1 UHF (spin=0.5; S^2=1.560937)	60.08		
Gaussian 94[21]		67.14	
This work (estimate)		**70.±5.**	

Method	Zero Point Energy and Ionization Potential Zero point energy/kcal·mol^{-1}	Ionization potential/eV
PM3		
AM1	122.208	9.259
AM1 UHF	120.677	8.845
Gaussian 94 BP86/6-31g[21]	115.097*	

*zero point vibrational energy

than on a stable molecule with $\Delta H_f(298)=47.35$ kcal/mol and $S^2=1.647$. The transition state is not mentioned in Table 21. The internal rotation moments of inertia were calculated for ethyl benzene radical using the Brinkmann and Burcat program.[6] The rotation barrier values were taken from Benson[4] (see Table 2). S^2 shows a condition between a doublet and a triplet. Thus this radical is also UHF unstable. Table 21 lists all the literature and calculated molecular vibrations, moments of inertia and enthalpies of formation of 1-naphthalene β-ethyl-radical. Table 22 lists the thermodynamic data of 1-naphthalene β-ethyl-radical.

3.11. 1-Vinyl-Naphthalene: $C_{10}H_7CH{=}CH_2$

This species was mentioned by Liebmann,[26] and estimated by Marinov[28] using Benson's[4] group additivity method. Calculations with the AM1 and AM1/UHF were successful, but the MOPAC/PM3 method failed. The internal rotation moment of inertia was calculated with the Brinkmann and Burcat program[6] for styrene and the rotation barrier was taken from Head-Gordon and Pople for styrene[23] (see Table 2). Table 23 lists all the literature and calculated molecular vibrations, moments of inertia, and enthalpies of formation of

TABLE 20. Thermodynamic properties of the 1-$C_{10}H_7CH_2CH_2$· α-ethyl 1-naphthalene radical (mol wt=155.219 340)

T (K)	C_p (J/mol K)	H_T-H_{298} (kJ/mol)	S_T (J/mol K)	$-(G_T-H_{298})/T$ (J/mol K)	H_T (kJ/mol)	$\Delta_f H_T$ (kJ/mol)	Log K
0	-------	−29.235	-------	-------	263.645	322.861	-------
100	67.514	−24.654	293.982	540.526	268.226	310.211	−176.2040
200	123.949	−15.175	357.451	433.327	277.705	300.949	−96.1594
298.15	185.266	0.000	418.370	418.370	292.880	292.880	−70.5938
300	186.401	0.344	419.519	418.373	293.224	292.743	−70.2775
400	243.516	21.917	481.187	426.394	314.797	286.056	−57.6725
500	290.318	48.697	540.750	443.356	341.577	280.840	−50.2677
600	327.524	79.660	597.099	464.333	372.540	276.764	−45.4123
700	357.391	113.957	649.910	487.114	406.837	273.634	−41.9896
800	381.854	150.958	699.282	510.584	443.838	271.339	−39.4485
900	402.248	190.193	745.470	534.144	483.073	269.801	−37.4858
1000	419.464	231.302	788.767	557.465	524.182	268.900	−35.9225
1100	434.115	274.001	829.452	580.360	566.881	268.556	−34.6467
1200	446.655	318.055	867.776	602.730	610.935	268.669	−33.5838
1300	457.435	363.273	903.964	624.523	656.153	269.145	−32.6841
1400	466.738	409.493	938.212	645.717	702.373	269.883	−31.9099
1500	474.795	456.579	970.695	666.309	749.459	270.849	−31.2383
1600	481.798	504.417	1001.566	686.306	797.297	271.958	−30.6481
1700	487.904	552.909	1030.963	705.722	845.789	273.154	−30.1244
1800	493.249	601.972	1059.005	724.576	894.852	274.409	−29.6571
1900	497.942	651.537	1085.802	742.888	944.417	275.679	−29.2372
2000	502.078	701.542	1111.451	760.680	994.422	276.941	−28.8569
2100	505.734	751.936	1136.037	777.972	1044.816	278.172	−28.5121
2200	508.976	802.675	1159.640	794.788	1095.555	279.332	−28.1967
2300	511.861	853.720	1182.330	811.148	1146.600	280.435	−27.9079
2400	514.436	905.037	1204.170	827.072	1197.917	281.449	−27.6424
2500	516.741	956.598	1225.218	842.579	1249.478	282.342	−27.3965
2600	518.809	1008.377	1245.526	857.689	1301.257	283.150	−27.1692
2700	520.671	1060.353	1265.142	872.418	1353.233	283.825	−26.9587
2800	522.352	1112.506	1284.108	886.785	1405.386	284.378	−26.7626
2900	523.873	1164.818	1302.465	900.804	1457.698	284.796	−26.5791
3000	525.252	1217.275	1320.249	914.490	1510.155	285.048	−26.4074
3100	526.506	1269.864	1337.493	927.859	1562.744	285.195	−26.2481
3200	527.649	1322.573	1354.227	940.923	1615.453	285.168	−26.0978
3300	528.693	1375.391	1370.480	953.695	1668.271	284.991	−25.9566
3400	529.648	1428.308	1386.277	966.186	1721.188	284.660	−25.8239
3500	530.524	1481.318	1401.643	978.409	1774.198	284.148	−25.6995
3600	531.329	1534.411	1416.600	990.375	1827.291	283.490	−25.5814
3700	532.070	1587.581	1431.168	1002.092	1880.461	282.650	−25.4707
3800	532.754	1640.823	1445.367	1013.571	1933.703	281.638	−25.3655
3900	533.385	1694.130	1459.213	1024.821	1987.010	280.461	−25.2668
4000	533.970	1747.498	1472.725	1035.850	2040.378	279.079	−25.1727
4100	534.511	1800.923	1485.917	1046.667	2093.803	277.552	−25.0846
4200	535.014	1854.399	1498.803	1057.280	2147.279	275.828	−25.0007
4300	535.482	1907.924	1511.398	1067.695	2200.804	273.910	−24.9206
4400	535.918	1961.495	1523.714	1077.919	2254.375	271.770	−24.8448
4500	536.324	2015.107	1535.762	1087.960	2307.987	269.482	−24.7735
4600	536.703	2068.759	1547.554	1097.824	2361.639	267.015	−24.7058
4700	537.058	2122.447	1559.100	1107.516	2415.327	264.377	−24.6416
4800	537.390	2176.170	1570.410	1117.042	2469.050	261.559	−24.5811
4900	537.702	2229.924	1581.494	1126.408	2522.804	258.566	−24.5237
5000	537.994	2283.709	1592.360	1135.618	2576.589	255.274	−24.4682
5100	538.268	2337.522	1603.017	1144.679	2630.402	251.945	−24.4173
5200	538.527	2391.362	1613.471	1153.594	2684.242	248.363	−24.3678
5300	538.770	2445.227	1623.732	1162.368	2738.107	244.598	−24.3212
5400	538.999	2499.116	1633.805	1171.005	2791.996	240.657	−24.2770
5500	539.216	2553.027	1643.697	1179.510	2845.907	236.538	−24.2350
5600	539.420	2606.959	1653.415	1187.886	2899.839	232.241	−24.1951
5700	539.613	2660.910	1662.964	1196.137	2953.790	227.775	−24.1577
5800	539.796	2714.881	1672.350	1204.267	3007.761	223.139	−24.1220
5900	539.969	2768.869	1681.579	1212.279	3061.749	218.337	−24.0882
6000	540.133	2822.874	1690.656	1220.177	3115.754	213.377	−24.0564

TABLE 21. Fundamental vibrations, moments of inertia and enthalpies of formation for the 1-ethyl naphthalene β-radical $C_{10}H_7C{\cdot}H{-}CH_3$. The properties marked in bold were chosen for thermodynamic calculations

PM3												
	22	90.8	118.5	172.5	180	302	313	401	432	459	488	521
	529	582	625	634	746	779	793	816	824	895	898	916
	928	967	993	1003	1015	1092	1102	1122	1136	1139	1158	1172
	1186	1221	1251	1333	1381	1394	1418	1438	1479	1532	1578	1625
	1699	1786	1802	1823	3046	3052	3053	3061	3064	3074	3075	3077
	3083	3100	3170									
AM1												
	51.4	111	126	175	184	311	330	415	446	480	512	531
	554	609	653	715	775	816	828	853	868	920	951	963
	976	996	997	1004	1059	1159	1176	1188	1207	1211	1226	1244
	1281	1314	1330	1378	1387	1415	1454	1464	1523	1568	1605	1652
	1711	1769	1795	1801	3052	3054	3150	3177	3183	3183	3188	3189
	3196	3198	3209									
AM1 UHF												
	62.7	122	158	210	230	263	352	387	421	478	480	518
	568	593	607	728	731	784	805	810	846	870	890	933
	939	946	962	1020	1051	1170	1181	1196	1204	1214	1249	1270
	1307	1314	1360	1387	1394	1426	1460	1477	1502	1520	1548	1621
	1628	1654	1670	1692	3027	3042	3133	3150	3179	3184	3187	3188
	3195	3197	3202									
Gaussian 94: 6-31G(d,p) (6D, 7F)												
	69.2	77.5	**122**	**184**	**195**	**236**	**324**	**404**	**425**	**469**	**473**	**497**
	519	**594**	**601**	**646**	**707**	**707**	**750**	**775**	**775**	**826**	**845**	**845**
	901	**924**	**940**	**978**	**979**	**1011**	**1037**	**1095**	**1102**	**1135**	**1154**	**1166**
	1211	**1236**	**1251**	**1254**	**1304**	**1358**	**1310**	**1358**	**1367**	**1444**	**1454**	**1460**
	1501	**1541**	**1561**	**1610**	**2934**	**2977**	**3056**	**3093**	**3097**	**3103**	**3112**	**3115**
	3123	**3127**	**3129**									

Method	Principal moments of inertia/10^{-40} gm·cm^2 I_a	I_b	I_c
PM3	586.988370	913.423397	1444.278408
AM1	590.794346	914.142521	1449.936220
AM1 UHF (spin=0.5; S^2=1.647181)	636.187021	842.428679	1456.250372
Gaussian 94[21] (S^2=0.7671)	**509.0936**	**1077.74519**	**1581.2895**

Brinkmann and Burcat[6] $I_r(-CH{\cdot}CH_3)$=40.3467 σ_r=1 Benson[4] V(3)=2.9 kcal/mol
Brinkmann and Burcat[6] $I_r(-CH_3)$=4.17138 σ_r=1 Benson[4] V(3)=2.8 kcal/mol

Method	Enthalpy of formation/kcal·mol^{-1} $\Delta_f H°$(298.15 K)
PM3	58.00
AM1	59.83
AM1 UHF	47.27
Gaussian 94[21]	48.58
NIST 94[35]*	**52.7**

*C_p(298.15 K)=44.2 cal·K^{-1}·mol^{-1} and S(298.15 K)=97.9 cal·K^{-1}·mol^{-1}

Method	Zero Point Energy and Ionization Potential Zero point energy/kcal·mol^{-1}	Ionization potential/eV
PM3	119.022	9.094
AM1	122.841	8.987
AM1 UHF	121.456	8.401
Gaussian 94[21]	115.662*	

*zero point vibrational energy

TABLE 22. Thermodynamic properties of the 1-$C_{10}H_7CH{\cdot}CH_3$ β-ethyl 1-naphthalene radical (mol wt=155.219 340)

T (K)	C_p (J/mol K)	H_T-H_{298} (kJ/mol)	S_T (J/mol K)	$-(G_T-H_{298})/T$ (J/mol K)	H_T (kJ/mol)	$\Delta_f H_T$ (kJ/mol)	Log K
0	-------	−29.373	-------	-------	191.124	250.340	-------
100	69.269	−24.665	301.980	548.632	195.832	237.817	−137.9724
200	123.793	−15.111	366.049	441.604	205.386	228.630	−76.8230
298.15	184.272	0.000	426.717	426.717	220.497	220.497	−57.4768
300	185.400	0.342	427.861	426.721	220.839	220.358	−57.2387
400	242.381	21.805	489.212	434.700	242.302	213.561	−47.7867
500	289.306	48.476	548.533	451.580	268.973	208.236	−42.2765
600	326.682	79.346	604.712	472.468	299.843	204.068	−38.6860
700	356.698	113.568	657.405	495.166	334.065	200.861	−36.1679
800	381.280	150.506	706.692	518.560	371.002	198.503	−34.3058
900	401.769	189.688	752.819	542.054	410.185	196.913	−32.8717
1000	419.056	230.753	796.069	565.316	451.250	195.968	−31.7315
1100	433.763	273.413	836.718	588.160	493.910	195.585	−30.8022
1200	446.345	317.435	875.013	610.484	537.932	195.666	−30.0281
1300	457.157	362.623	911.178	632.237	583.120	196.113	−29.3729
1400	466.482	408.817	945.406	653.395	629.313	196.824	−28.8083
1500	474.555	455.878	977.872	673.954	676.375	197.765	−28.3185
1600	481.566	503.692	1008.728	693.921	724.189	198.850	−27.8873
1700	487.678	552.161	1038.111	713.310	772.658	200.024	−27.5041
1800	493.025	601.202	1066.140	732.139	821.699	201.256	−27.1616
1900	497.717	650.744	1092.925	750.428	871.241	202.503	−26.8534
2000	501.850	700.727	1118.562	768.199	921.224	203.743	−26.5737
2100	505.503	751.099	1143.138	785.472	971.595	204.951	−26.3200
2200	508.741	801.814	1166.730	802.269	1022.311	206.087	−26.0874
2300	511.621	852.835	1189.409	818.611	1073.332	207.167	−25.8742
2400	514.192	904.128	1211.239	834.519	1124.625	208.156	−25.6781
2500	516.492	955.664	1232.277	850.011	1176.161	209.025	−25.4960
2600	518.557	1007.418	1252.575	865.106	1227.915	209.808	−25.3276
2700	520.415	1059.369	1272.181	879.822	1279.865	210.458	−25.1716
2800	522.093	1111.496	1291.138	894.175	1331.992	210.985	−25.0263
2900	523.611	1163.782	1309.486	908.182	1384.279	211.377	−24.8900
3000	524.989	1216.213	1327.261	921.856	1436.710	211.602	−24.7624
3100	526.241	1268.776	1344.496	935.213	1489.272	211.724	−24.6443
3200	527.383	1321.458	1361.221	948.266	1541.954	211.670	−24.5327
3300	528.427	1374.249	1377.466	961.027	1594.746	211.466	−24.4279
3400	529.382	1427.140	1393.256	973.508	1647.637	211.108	−24.3294
3500	530.259	1480.123	1408.614	985.722	1700.620	210.570	−24.2373
3600	531.065	1533.190	1423.563	997.677	1753.686	209.886	−24.1497
3700	531.807	1586.334	1438.124	1009.385	1806.830	209.019	−24.0679
3800	532.492	1639.549	1452.316	1020.855	1860.046	207.981	−23.9900
3900	533.126	1692.830	1466.156	1032.097	1913.327	206.778	−23.9173
4000	533.713	1746.173	1479.661	1043.118	1966.670	205.370	−23.8479
4100	534.257	1799.572	1492.846	1053.926	2020.068	203.817	−23.7833
4200	534.762	1853.023	1505.727	1064.531	2073.520	202.068	−23.7217
4300	535.233	1906.523	1518.316	1074.938	2127.020	200.125	−23.6630
4400	535.672	1960.068	1530.625	1085.155	2180.565	197.960	−23.6075
4500	536.081	2013.656	1542.668	1095.189	2234.153	195.648	−23.5558
4600	536.463	2067.284	1554.455	1105.045	2287.780	193.157	−23.5067
4700	536.821	2120.948	1565.996	1114.730	2341.445	190.495	−23.4603
4800	537.157	2174.647	1577.301	1124.250	2395.144	187.653	−23.4169
4900	537.471	2228.379	1588.380	1133.609	2448.875	184.637	−23.3759
5000	537.767	2282.141	1599.242	1142.814	2502.638	181.322	−23.3362
5100	538.045	2335.931	1609.894	1151.868	2556.428	177.971	−23.3005
5200	538.307	2389.749	1620.344	1160.777	2610.246	174.367	−23.2656
5300	538.553	2443.592	1630.600	1169.545	2664.089	170.580	−23.2329
5400	538.786	2497.459	1640.669	1178.177	2717.956	166.617	−23.2022
5500	539.006	2551.349	1650.558	1186.676	2771.846	162.477	−23.1733
5600	539.214	2605.260	1660.272	1195.047	2825.757	158.159	−23.1459
5700	539.410	2659.191	1669.817	1203.292	2879.688	153.673	−23.1206
5800	539.596	2713.142	1679.200	1211.417	2933.638	149.017	−23.0967
5900	539.773	2767.110	1688.426	1219.424	2987.607	144.195	−23.0742
6000	539.940	2821.096	1697.499	1227.316	3041.593	139.215	−23.0534

TABLE 23. Fundamental vibrations, moments of inertia and enthalpies of formation for 1-vinyl naphthalene $C_{10}H_7CH{=}CH_2$. The properties marked in bold were chosen for thermodynamic calculations

AM1											
83	118	172	203	277	351	401	447	475	513	531	543
589	648	685	772	822	826	853	864	921	950	961	974
986	999	1007	1052	1055	1153	1181	1194	1209	1217	1252	1296
1301	1341	1377	1417	1471	1528	1529	1609	1634	1703	1765	1790
1802	1857	3147	3178	3180	3180	3185	3185	3189	3195	3198	3215
AM1 UHF											
71	105.7	158	197	255	348	385	424	466	487	509	525
573	637	650	735	789	813	817	855	882	906	935	946
953	959	967	1024	1049	1141	1176	1191	1205	1212	1253	1297
1305	1350	1396	1424	1460	1503	1516	1522	1591	1644	1651	1681
1695	1704	3146	3180	3182	3183	3186	3187	3191	3196	3200	3215
Gaussian 94 BP86/6-31G(d,p) (6D, 7F)											
85.8	**119**	**175**	**199**	**250**	**334**	**397**	**428**	**462**	**482**	**498**	**527**
587	**610**	**685**	**702**	**722**	**768**	**780**	**788**	**843**	**847**	**883**	**886**
915	**935**	**948**	**989**	**1000**	**1021**	**1035**	**1089**	**1139**	**1154**	**1164**	**1217**
1226	**1250**	**1295**	**1348**	**1379**	**1393**	**1416**	**1435**	**1455**	**1513**	**1576**	**1591**
1620	**1644**	**3074**	**3083**	**3093**	**3096**	**3105**	**3110**	**3120**	**3124**	**3130**	**3168**

Principal moments of inertia/10^{-40} gm·cm^2

Method	I_a	I_b	I_c
PM3			
AM1	523.202335	978.416462	1482.910832
AM1 UHF	516.299297	994.652657	1502.158671
Gaussian 94[21]	**526.18944**	**1005.9202**	**1520.2459**

Brinkmann and Burcat[6]: $I_r(-CH_2{=}CH_2)=$ **33.9278**; ROSYM=**2**; V(2)=**3.06** kcal·mol^{-1} [Head-Gordon][23]

Enthalpy of formation/kcal·mol^{-1}

Method	$\Delta_f H°$(298.15 K)
PM3	
AM1	59.04
AM1 UHF	56.09
Gaussian 94[21]	48.04
NIST 94[35]*	**51.4**
Liebmann[26]	51.0
Marinov[28]	52.99

*C_p(298.15 K)=43.2 cal·K^{-1}·mol^{-1} and S(298.15 K)=96.9 cal·K^{-1}·mol^{-1}

Zero Point Energy and Ionization Potential

Method	Zero point energy/kcal·mol^{-1}	Ionization potential/eV
PM3		
AM1	116.698	
AM1 UHF	114.667	8.793
Gaussian 94 BP86/6-31g	109.94699*	
Liebmann[26]		(7.7)

*zero point vibrational energy

1-vinyl-naphthalene. Table 24 lists the thermodynamic data of 1-vinyl-naphthalene.

3.12. 1-Vinyl-Naphthalene α-Radical: $C_{10}H_7CH{=}CH\cdot$

This radical was estimated by Wang and Frenklach.[48] The vibrations chosen for this species were from our Gaussian 94 BP86/6-31G calculations. The internal rotation moment of inertia and rotation barrier were taken from the styrene radical. The value of the internal moment of inertia was calculated with the Brinkmann and Burcat program for the sake of compatibility with the other vinyl-naphthalene species, although a different value was mentioned by Melius (see Table 2). The following data were obtained for various conditions.

Comparison of data obtained for the 1-naphthyl-1-vinyl radical

$C_p(298)$ kcal/mol	$S(298)$ cal/mol K	Source of Data
40.7	100.2	NIST 94 estimate (Ref. 35)
39.9	100.8	Wang and Frenklach estimate (Ref. 48)
41.323	96.614	This study with internal moments of inertia for the styrene radical
41.069	96.564	This study with no internal moment of inertia
40.096	98.226	This study with moment of internal rotation and barrier $V(2)=0$.

The full internal moments of inertia for styrene were chosen since it is believed that this possibility is the correct one, although if the internal rotational barrier is taken as zero, the calculated values are closer to the other estimates. The $S^2 = 1.921$ shows a condition close to a triplet for this radical. For the enthalpy of formation, the value from Wang and Frenklach[48] $\Delta_f H_{298} = 112.3$ kcal/mol, was adopted. Table 25 lists all the literature and calculated molecular vibrations, moments of inertia and enthalpies of formation of the 1-vinyl-naphthalene α-radical. Table 26 lists the thermodynamic data of the 1-vinyl-naphthalene α radical.

3.13. 1-Naphthalene β-vinyl Radical: $C_{10}H_7C\cdot{=}CH_2$

This radical was estimated by Marinov *et al.*[28] The MOPAC/AM1 method failed, but PM3 and AM1/UHF were successful. The internal rotation moment of inertia was calculated with the Brinkmann and Burcat program for the relevant styrene radical, and the rotation barrier was estimated. This radical shows a half way doublet-triplet condition according to the $S^2 = 1.694$ value. Marinov *et al.*'s[28] enthalpy of formation of $\Delta_f H_{298} = 98.52$ kcal/mol was chosen. Table 27 lists all the literature and calculated molecular vibrations, moments of inertia and enthalpies of formation of 1-naphthalene α-vinyl-radical. Table 28 lists the thermodynamic data of 1-naphthalene α-vinyl radical.

3.14. 1-Ethynyl Naphthalene: $C_{10}H_7C_2H$

This species was calculated by Wang and Frenklach[48] and by Marinov *et al.*[28] and estimated by Liebmann.[26] The internal rotation moment of inertia for the ethynyl extension is 0 (see Table 2), therefore the lowest vibration, 102 cm^{-1}, was included in the calculation. The $S^2 = 0.8534$ value shows that the UHF calculation is close to a doublet, thus the molecule is UHF unstable. The enthalpy of formation calculated by Wang and Frenklach[48] was adopted. Table 29 lists all the literature and calculated molecular vibrations, moments of inertia and enthalpies of formation of 1-ethynyl-naphthalene. Table 30 lists the thermodynamic data of 1-ethynyl-naphthalene.

3.15. 1-Ethynyl Naphthalene Radical: $C_{10}H_7C{\equiv}C\cdot$

There is no quotation of this radical in the literature. The internal rotation moment of inertia is 0, as for the parent molecule, therefore the lowest vibration of 92.2 cm^{-1} was included in the calculation. The $S^2 = 1.481$ value shows that the UHF calculation is between a doublet and a triplet condition, thus the molecule is UHF unstable. The enthalpy of formation estimated by the NIST 94 program or the Gaussian 94 one should be close to reality and so is the value proposed by Wang and Frenklach,[47] since the enthalpy of formation for 8-ethynyl-naphthalene-1-yl (a radical on the naphthalene ring) is 149.3 kcal/mol. Table 31 lists all the literature and calculated molecular vibrations, moments of inertia and enthalpies of formation of 1-ethynyl-naphthalene radical. Table 32 lists the thermodynamic data of the 1-ethynyl-naphthalene radical.

3.16. 1-Naphthol: $C_{10}H_7OH$

The thermodynamic properties of 1- and 2-naphthol were calculated by Kudchadker, Kudchadker and Zwolinski[24] using experimental measurements gathered from the literature. The IR spectrum of naphthol is available in the NIST WebBook.[1] The Benson group additivity method is relatively easy and straightforward. Since the molecule contains oxygen, it is assumed that the MOPAC/PM3 method is superior to AM1.[43] The vibrations from the IR spectrum were used for the thermodynamic calculations and they were supplemented with values from Gaussian 94 BP86/6-31G(d,p)(6D,7F). These data appear to be superior to those provided by Kudchadker *et al.*[24] The internal rotation moments of inertia and

TABLE 24. Thermodynamic properties of 1-$C_{10}H_7CH{=}CH_2$ vinyl 1-naphthalene (mol wt=154.211 400)

T (K)	C_p (J/mol K)	H_T-H_{298} (kJ/mol)	S_T (J/mol K)	$-(G_T-H_{298})/T$ (J/mol K)	H_T (kJ/mol)	$\Delta_f H_T$ (kJ/mol)	Log K
0	-------	−27.738	-------	-------	187.319	242.302	-------
100	65.522	−23.060	284.297	514.894	191.998	231.248	−132.8346
200	115.222	−14.159	344.029	414.824	200.899	222.755	−73.3203
298.15	173.671	0.000	400.851	400.851	215.058	215.058	−54.4621
300	174.771	0.322	401.929	400.854	215.380	214.925	−54.2298
400	230.540	20.658	460.044	408.400	235.715	208.453	−45.0074
500	276.629	46.101	516.628	424.426	261.158	203.362	−39.6277
600	313.349	75.670	570.436	444.320	290.727	199.357	−36.1206
700	342.771	108.528	621.029	465.990	323.585	196.256	−33.6604
800	366.781	144.044	668.419	488.364	359.102	193.953	−31.8410
900	386.714	181.748	712.805	510.863	396.806	192.372	−30.4398
1000	403.476	221.281	754.442	533.161	436.339	191.397	−29.3261
1100	417.697	262.359	793.583	555.074	477.417	190.951	−28.4186
1200	429.840	304.752	830.461	576.501	519.809	190.942	−27.6630
1300	440.259	348.270	865.289	597.389	563.327	191.279	−27.0238
1400	449.239	392.756	898.252	617.712	607.813	191.864	−26.4733
1500	457.009	438.077	929.518	637.466	653.135	192.670	−25.9959
1600	463.757	484.124	959.233	656.656	699.181	193.613	−25.5760
1700	469.640	530.800	987.529	675.293	745.858	194.640	−25.2030
1800	474.787	578.027	1014.522	693.395	793.085	195.725	−24.8698
1900	479.307	625.737	1040.316	710.981	840.794	196.826	−24.5702
2000	483.288	673.871	1065.004	728.069	888.928	197.922	−24.2984
2100	486.808	722.379	1088.671	744.681	937.437	198.989	−24.0520
2200	489.930	771.219	1111.391	760.837	986.277	199.990	−23.8262
2300	492.707	820.353	1133.231	776.556	1035.411	200.938	−23.6193
2400	495.186	869.750	1154.254	791.858	1084.808	201.802	−23.4292
2500	497.404	919.382	1174.514	806.762	1134.440	202.551	−23.2527
2600	499.395	969.224	1194.062	821.284	1184.281	203.220	−23.0895
2700	501.187	1019.254	1212.944	835.442	1234.312	203.762	−22.9385
2800	502.803	1069.455	1231.201	849.252	1284.513	204.187	−22.7978
2900	504.265	1119.810	1248.871	862.729	1334.867	204.484	−22.6659
3000	505.591	1170.304	1265.989	875.887	1385.361	204.621	−22.5425
3100	506.796	1220.924	1282.587	888.740	1435.982	204.659	−22.4283
3200	507.893	1271.659	1298.695	901.301	1486.717	204.529	−22.3205
3300	508.895	1322.499	1314.339	913.581	1537.557	204.255	−22.2193
3400	509.811	1373.435	1329.545	925.593	1588.493	203.833	−22.1241
3500	510.651	1424.459	1344.335	937.347	1639.517	203.237	22.0352
3600	511.422	1475.563	1358.732	948.853	1690.621	202.502	−21.9507
3700	512.131	1526.741	1372.754	960.121	1741.799	201.590	−21.8718
3800	512.785	1577.988	1386.420	971.160	1793.045	200.514	−21.7967
3900	513.388	1629.297	1399.748	981.980	1844.354	199.279	−21.7266
4000	513.946	1680.664	1412.753	992.587	1895.721	197.846	−21.6597
4100	514.463	1732.085	1425.450	1002.990	1947.142	196.273	−21.5975
4200	514.942	1783.555	1437.853	1013.197	1998.613	194.512	−21.5382
4300	515.388	1835.072	1449.975	1023.214	2050.130	192.562	−21.4817
4400	515.802	1886.632	1461.829	1033.049	2101.689	190.398	−21.4283
4500	516.188	1938.231	1473.425	1042.707	2153.289	188.092	−21.3785
4600	516.548	1989.868	1484.774	1052.194	2204.926	185.614	−21.3313
4700	516.884	2041.540	1495.886	1061.516	2256.598	182.970	−21.2868
4800	517.198	2093.244	1506.772	1070.679	2308.302	180.154	−21.2452
4900	517.493	2144.979	1517.439	1079.688	2360.037	177.169	−21.2058
5000	517.769	2196.742	1527.897	1088.548	2411.800	173.892	−21.1677
5100	518.028	2248.532	1538.153	1097.264	2463.590	170.584	−21.1334
5200	518.272	2300.348	1548.214	1105.840	2515.405	167.027	−21.1000
5300	518.501	2352.186	1558.088	1114.280	2567.244	163.294	−21.0687
5400	518.716	2404.047	1567.782	1122.588	2619.105	159.390	−21.0394
5500	518.919	2455.929	1577.302	1130.770	2670.987	155.313	−21.0117
5600	519.111	2507.831	1586.654	1138.827	2722.888	151.063	−20.9856
5700	519.292	2559.751	1595.844	1146.765	2774.808	146.648	−20.9614
5800	519.464	2611.689	1604.877	1154.586	2826.746	142.067	−20.9386
5900	519.626	2663.643	1613.758	1162.293	2878.701	137.323	−20.9171
6000	519.779	2715.614	1622.493	1169.890	2930.671	132.425	−20.8973

TABLE 25. Fundamental vibrations, moments of inertia and enthalpies of formation for the 1-vinyl trans-naphthalene α-radical $C_{10}H_7CH{=}CH\cdot$. The properties marked in bold were chosen for thermodynamic calculations

AM1												
	55.3	105.9	164	198	257	300	366	402	444	483	521	538
	562	596	665	760	791	814	838	845	882	903	928	951
	963	977	997	1004	1145	1181	1193	1207	1210	1230	1257	1300
	1329	1358	1460	1521	1528	1604	1634	1705	1763	1787	1803	1883
	3141	3179	3181	3183	3185	3190	3197	3199	3428			
AM1 UHF												
	76	113.7	159.5	201	258	349	376	425	452	479	487	530
	553	578	658	708	732	786	810	828	860	877	890	907
	938	948	955	967	1135	1176	1188	1205	1209	1244	1259	1304
	1340	1404	1464	1501	1509	1526	1579	1638	1655	1677	1693	1699
	3119	3180	3184	3185	3186	3191	3196	3200	3387			
Wang and Frenklach (Ref. 48)												
	100	155	179	246	315	410	462	425	450	494	511	529
	561	631	719	749	769	791	796	822	843	875	900	910
	927	947	954	1079	1114	1120	1133	1133	1143	1158	1184	1230
	1258	1284	1382	1440	1447	1516	1549	1616	1668	1695	1710	1778
	2928	3010	3012	3018	3020	3021	3027	3031	3274			
Gaussian 94:BP86/6-31G(d,p) (6D, 7F)												
	74.2	**116**	**172**	**193**	**255**	**321**	**403**	**427**	**462**	**480**	**506**	**528**
	576	**610**	**661**	**695**	**719**	**762**	**779**	**782**	**832**	**843**	**863**	**876**
	886	**915**	**934**	**948**	**1003**	**1032**	**1079**	**1139**	**1154**	**1161**	**1206**	**1220**
	1228	**1256**	**1353**	**1378**	**1393**	**1433**	**1452**	**1512**	**1568**	**1590**	**1607**	**1621**
	3030	**3094**	**3097**	**3106**	**3110**	**3120**	**3124**	**3130**	**3173**			

Method	Principal moments of inertia/10^{-40} gm·cm^2 I_a	I_b	I_c
PM3			
AM1	512.785792	957.660096	1458.484175
AM1 UHF	505.892865	975.324590	1476.242369
Gaussian 94[21]	**520.35181**	**976.71638**	**1484.4918**
Wang and Frenklach[48] $I_aI_bI_c$=720937.06×10^{-117}			

Melius[31]: $I_r(-CH{=}CH\cdot)$=19.64385 ROSYM=**2** V(2)=**4.4** kcal/mole
Brinkmann and Burcat[6]: $I_r(-CH{=}CH\cdot)$=**27.3405**

Method	Enthalpy of formation/kcal·mol^{-1} $\Delta_f H°$(298.15 K)
PM3	
AM1	109.08
AM1 UHF (spin=0.5; S^2=1.921067)	99.88
Gaussian 94[21]	106.23
Wang and Frenklach[48]*	**112.3**
NIST 94[35]**	109.2

*C_p(298.15 K)=39.9 cal·K^{-1}·mol^{-1} and S(298.15 K)=100.8 cal·K^{-1}·mol^{-1}
**C_p(298.15 K)=40.7 cal·K^{-1}·mol^{-1} and S(298.15 K)=100.2 cal·K^{-1}·mol^{-1}

Method	Zero Point Energy and Ionization Potential Zero point energy/kcal·mol^{-1}	Ionization potential/eV
PM3		
AM1	107.41	
AM1 UHF	106.061	8.865
Gaussian 94[21]	101.48180*	

*zero point vibrational energy

barrier were taken from Kudchadker *et al.*[24] The S^2 values shows that both UHF calculations, PM3 (S^2=0.706) as well as AM1 (S^2=0.842), are close to a doublet, thus the molecule is UHF unstable. The enthalpy of formation chosen was proposed by NIST 98.[39] Table 33 lists all the literature and calculated molecular vibrations, moments of inertia and enthalpies of formation of 1-naphthol. Table 34 lists the thermodynamic data of 1-naphthol.

TABLE 26. Thermodynamic properties of the 1-$C_{10}H_7CH{=}CH\cdot$ 1-naphthyl α-vinyl radical (mol wt = 153.203 46)

T (K)	C_p (J/mol K)	H_T-H_{298} (kJ/mol)	S_T (J/mol K)	$-(G_T-H_{298})/T$ (J/mol K)	H_T (kJ/mol)	$\Delta_f H_T$ (kJ/mol)	Log K
0	-------	−27.649	-------	-------	442.214	492.963	-------
100	65.412	−23.033	287.780	518.112	446.830	483.346	−261.7010
200	115.260	−14.131	347.515	418.170	455.732	476.202	−136.2113
298.15	172.891	0.000	404.234	404.234	469.863	469.863	−95.5122
300	173.967	0.321	405.307	404.237	470.184	469.756	−95.0047
400	228.166	20.501	462.986	411.734	490.364	464.581	−74.6639
500	272.420	45.616	518.845	427.613	515.479	460.623	−62.5809
600	307.250	74.669	571.719	447.271	544.532	457.567	−54.5866
700	334.833	106.825	621.233	468.626	576.688	455.233	−48.9104
800	357.115	141.460	667.448	490.623	611.323	453.525	−44.6727
900	375.465	178.117	710.603	512.695	647.980	452.384	−41.3868
1000	390.801	216.453	750.979	534.527	686.316	451.713	−38.7631
1100	403.753	256.198	788.851	555.944	726.061	451.455	−36.6191
1200	414.776	297.139	824.467	576.852	767.002	451.533	−34.8325
1300	424.212	339.100	858.049	597.203	808.964	451.873	−33.3207
1400	432.332	381.938	889.792	616.979	851.801	452.393	−32.0224
1500	439.351	425.530	919.864	636.178	895.393	453.073	−30.8971
1600	445.444	469.777	948.419	654.808	939.640	453.842	−29.9106
1700	450.754	514.593	975.586	672.885	984.456	454.655	−29.0381
1800	455.401	559.906	1001.485	690.427	1029.769	455.493	−28.2613
1900	459.482	605.654	1026.219	707.454	1075.518	456.319	−27.5651
2000	463.080	651.786	1049.881	723.988	1121.649	457.118	−26.9368
2100	466.262	698.257	1072.553	740.050	1168.120	457.870	−26.3682
2200	469.087	745.027	1094.310	755.662	1214.890	458.540	−25.8500
2300	471.601	792.064	1115.219	770.843	1261.927	459.146	−25.3764
2400	473.846	839.338	1135.338	785.614	1309.201	459.658	−24.9421
2500	475.857	886.825	1154.723	799.993	1356.688	460.048	−24.5413
2600	477.663	934.503	1173.422	813.998	1404.366	460.350	−24.1713
2700	479.288	982.352	1191.480	827.646	1452.215	460.523	−23.8291
2800	480.755	1030.355	1208.938	840.954	1500.218	460.574	−23.5111
2900	482.082	1078.498	1225.832	853.936	1548.361	460.496	−23.2144
3000	483.285	1126.767	1242.196	866.607	1596.630	460.257	−22.9375
3100	484.378	1175.151	1258.061	878.980	1645.014	459.918	−22.6798
3200	485.373	1223.640	1273.455	891.068	1693.503	459.411	−22.4377
3300	486.281	1272.223	1288.405	902.883	1742.086	458.762	−22.2104
3400	487.111	1320.893	1302.934	914.436	1790.756	457.965	−21.9969
3500	487.870	1369.643	1317.066	925.739	1839.506	456.997	−21.7965
3600	488.567	1418.465	1330.819	936.801	1888.328	455.891	−21.6069
3700	489.207	1467.354	1344.214	947.632	1937.218	454.611	−21.4286
3800	489.796	1516.305	1357.268	958.241	1986.168	453.171	−21.2596
3900	490.338	1565.312	1369.998	968.636	2035.175	451.573	−21.1006
4000	490.839	1614.371	1382.419	978.826	2084.234	449.782	−20.9492
4100	491.302	1663.478	1394.545	988.818	2133.342	447.855	−20.8068
4200	491.730	1712.630	1406.389	998.620	2182.493	445.743	−20.6713
4300	492.127	1761.823	1417.965	1008.238	2231.686	443.446	−20.5422
4400	492.495	1811.055	1429.283	1017.679	2280.918	440.939	−20.4196
4500	492.837	1860.321	1440.354	1026.949	2330.185	438.296	−20.3038
4600	493.155	1909.621	1451.190	1036.055	2379.484	435.484	−20.1935
4700	493.452	1958.952	1461.799	1045.001	2428.815	432.510	−20.0886
4800	493.728	2008.311	1472.191	1053.792	2478.174	429.369	−19.9892
4900	493.986	2057.697	1482.374	1062.435	2527.560	426.063	−19.8946
5000	494.227	2107.107	1492.356	1070.934	2576.971	422.469	−19.8034
5100	494.452	2156.541	1502.145	1079.294	2626.405	418.850	−19.7183
5200	494.663	2205.997	1511.749	1087.518	2675.861	414.984	−19.6360
5300	494.861	2255.474	1521.173	1095.612	2725.337	410.947	−19.5578
5400	495.047	2304.969	1530.425	1103.578	2774.832	406.742	−19.4832
5500	495.221	2354.483	1539.510	1111.422	2824.346	402.367	−19.4120
5600	495.385	2404.013	1548.435	1119.147	2873.876	397.823	−19.3441
5700	495.539	2453.559	1557.204	1126.755	2923.422	393.117	−19.2795
5800	495.684	2503.121	1565.824	1134.251	2972.984	388.247	−19.2178
5900	495.821	2552.696	1574.298	1141.638	3022.559	383.216	−19.1588
6000	495.950	2602.284	1582.633	1148.919	3072.147	378.032	−19.1027

TABLE 27. Fundamental vibrations, moments of inertia and enthalpies of formation for 1-vinyl-naphthalene β-radical $C_{10}H_7C{\bullet}{=}CH_2$. The properties marked in bold were chosen for thermodynamic calculations

PM3												
	76.9	132	151	176	273	373	384	406	443	456	500	506
	569	593	613	727	767	782	807	814	863	860	903	913
	966	981	983	1012	1084	1104	1123	1133	1156	1173	1184	1220
	1236	1279	1310	1409	1482	1486	1570	1620	1700	1755	1811	2090
	3045	3050	3053	3064	3064	3075	3077	3098	3099			
AM1 UHF												
	76.5	132	154	172	258	370	378	379	430	464	476	519
	570	585	630	719	783	792	801	848	867	889	933	939
	942	946	964	1002	1128	1169	1181	1199	1206	1236	1270	1309
	1355	1392	1469	1477	1493	1526	1546	1617	1648	1663	1689	2071
	3132	3179	3180	3183	3186	3190	3191	3197	3200			
Gaussian 94: 6-31G(d,p) (6D, 7F)												
	81.5	**125**	**163**	**176**	**257**	**339**	**402**	**419**	**431**	**474**	**483**	**524**
	532	**578**	**611**	**683**	**706**	**749**	**767**	**776**	**818**	**838**	**847**	**852**
	917	**922**	**947**	**948**	**1013**	**1034**	**1075**	**1130**	**1146**	**1159**	**1166**	**1215**
	1254	**1304**	**1358**	**1374**	**1413**	**1429**	**1435**	**1494**	**1524**	**1555**	**1607**	**1882**
	2998	**3052**	**3095**	**3101**	**3104**	**3114**	**3116**	**3126**	**3132**			

Method	Principal moments of inertia/10^{-40} gm·cm^2 I_a	I_b	I_c
PM3	574.670698	900.861344	1469.881164
AM1			
AM1 UHF	580.328951	909.027637	1483.558418
Gaussian 94[21]	**=584.10493**	**928.99705**	**1507.2887**

Brinkmann and Burcat[6]: I_r=**32.31365**, ROSYM=**2**; V(2)=**4.6** kcal·mol^{-1} (estimated)

Method	Enthalpy of formation/kcal·mol^{-1} $\Delta_f H°$(298.15 K)
PM3	102.01
AM1	
AM1 UHF (spin=0.5; S^2=1.693939)	85.34
Gaussian 94[21] (S^2=0.7681)	85.87
Marinov[28]	**98.52**

Method	Zero Point Energy and Ionization Potential Zero point energy/kcal·mol^{-1}	Ionization potential/eV
PM3	103.803	7.357
AM1		
AM1 UHF	106.262	8.402
Gaussian 94 BP86/6-31g	101.169*	

*zero point vibrational energy

3.17. 1-Naphthoxy Radical: $C_{10}H_7O{\bullet}$

The thermodynamic properties of the naphthoxy radical mentioned were estimated by Marinov *et al.*[28] The S^2 =1.3858 value shows that the UHF calculation is between a doublet and a triplet, thus the molecule is UHF unstable. The Gaussian 94 vibrations and moments of inertia were used. The enthalpy of formation was taken from the NIST 94 estimation.[35] Table 35 lists all the literature and calculated molecular vibrations, moments of inertia and enthalpies of formation of the 1-naphthoxy radical. Table 36 lists the thermodynamic data of the 1-naphthoxy radical.

3.18. 1-Ethanol Naphthalene: $C_{10}H_7C_2H_4OH$

No calculations or estimations for this species were found in the literature. The vibrations and moments of inertia were taken from the Gaussian 94 calculation. The internal rotation moments of inertia were calculated for phenyl-ethanol using the Brinkmann and Burcat program.[6] The energy barriers were taken from Chao *et al.*[11] The S^2=0.780 value shows that the UHF calculation is close to a doublet, thus the molecule is UHF unstable. Table 37 lists all the literature and calculated molecular vibrations, moments of inertia and enthalpies of formation of 1-ethanol-naphthalene. Table 38 lists the thermodynamic data of 1-ethanol-naphthalene.

3.19. 1-Naphthaldehyde: $C_{10}H_7CHO$

No calculations or estimations for this species were found in the literature. The IR spectrum is available in NIST 97.[1] The vibrations read from this spectrum were used for the calculation of the thermodynamic properties. They were

TABLE 28. Thermodynamic properties of $C_{10}H_7C{\cdot}{=}CH_2$ β-vinyl 1-naphthalene (mol wt=153.203 460)

T (K)	C_p (J/mol K)	H_T-H_{298} (kJ/mol)	S_T (J/mol K)	$-(G_T-H_{298})/T$ (J/mol K)	H_T (kJ/mol)	$\Delta_f H_T$ (kJ/mol)	Log K
0	-------	−28.077	-------	-------	384.131	434.879	-------
100	66.222	−23.422	288.816	523.039	388.785	425.301	−231.3282
200	117.529	−14.357	349.621	421.404	397.851	418.320	−120.9846
298.15	175.034	0.000	407.260	407.260	412.208	412.208	−85.2533
300	176.099	0.325	408.346	407.263	412.532	412.104	−84.8081
400	229.657	20.686	466.552	414.837	432.894	407.111	−66.9730
500	273.385	45.922	522.684	430.839	458.130	403.274	−56.3894
600	307.889	75.054	575.702	450.611	487.262	400.297	−49.3928
700	335.295	107.264	625.299	472.065	519.472	398.017	−44.4286
800	357.488	141.940	671.570	494.144	554.148	396.350	−40.7244
900	375.794	178.633	714.766	516.285	590.840	395.244	−37.8531
1000	391.107	217.000	755.176	538.176	629.207	394.605	−35.5610
1100	404.043	256.775	793.076	559.644	668.983	394.376	−33.6881
1200	415.053	297.744	828.717	580.596	709.952	394.483	−32.1272
1300	424.475	339.733	862.320	600.988	751.940	394.850	−30.8064
1400	432.578	382.595	894.081	620.799	794.803	395.395	−29.6717
1500	439.577	426.212	924.171	640.030	838.419	396.099	−28.6882
1600	445.648	470.480	952.739	658.689	882.688	396.889	−27.8257
1700	450.934	515.315	979.918	676.792	927.523	397.722	−27.0625
1800	455.555	560.645	1005.827	694.357	972.852	398.576	−26.3829
1900	459.608	606.407	1030.568	711.406	1018.615	399.417	−25.7736
2000	463.177	652.550	1054.236	727.960	1064.758	400.226	−25.2235
2100	466.330	699.029	1076.912	744.041	1111.236	400.986	−24.7257
2200	469.124	745.804	1098.671	759.669	1158.012	401.662	−24.2718
2300	471.608	792.843	1119.581	774.866	1205.051	402.270	−23.8569
2400	473.824	840.117	1139.700	789.651	1252.324	402.781	−23.4764
2500	475.806	887.600	1159.083	804.043	1299.808	403.167	−23.1251
2600	477.583	935.271	1177.780	818.060	1347.479	403.463	−22.8009
2700	479.181	983.111	1195.834	831.719	1395.318	403.627	−22.5010
2800	480.622	1031.102	1213.288	845.037	1443.310	403.666	−22.2223
2900	481.925	1079.231	1230.176	858.028	1491.438	403.574	−21.9622
3000	483.104	1127.483	1246.535	870.707	1539.691	403.317	−21.7195
3100	484.176	1175.848	1262.393	883.087	1588.055	402.959	−21.4938
3200	485.151	1224.315	1277.781	895.182	1636.523	402.431	−21.2816
3300	486.039	1272.875	1292.723	907.004	1685.083	401.758	−21.0826
3400	486.852	1321.520	1307.245	918.563	1733.728	400.936	−20.8956
3500	487.595	1370.243	1321.369	929.871	1782.451	399.941	−20.7202
3600	488.277	1419.037	1335.115	940.938	1831.245	398.808	−20.5543
3700	488.904	1467.897	1348.502	951.773	1880.104	397.498	−20.3984
3800	489.480	1516.816	1361.548	962.385	1929.024	396.027	−20.2506
3900	490.012	1565.791	1374.269	972.784	1977.999	394.397	−20.1117
4000	490.503	1614.817	1386.681	982.977	2027.025	392.573	−19.9795
4100	490.957	1663.891	1398.799	992.972	2076.098	390.612	−19.8553
4200	491.378	1713.008	1410.635	1002.776	2125.215	388.465	−19.7372
4300	491.769	1762.165	1422.202	1012.396	2174.373	386.133	−19.6246
4400	492.131	1811.361	1433.512	1021.839	2223.568	383.590	−19.5179
4500	492.468	1860.591	1444.575	1031.110	2272.798	380.909	−19.4172
4600	492.783	1909.853	1455.402	1040.217	2322.061	378.060	−19.3214
4700	493.076	1959.146	1466.003	1049.164	2371.354	375.050	−19.2304
4800	493.349	2008.468	1476.387	1057.956	2420.676	371.871	−19.1443
4900	493.605	2057.816	1486.562	1066.600	2470.023	368.527	−19.0624
5000	493.845	2107.188	1496.537	1075.099	2519.396	364.895	−18.9836
5100	494.069	2156.584	1506.319	1083.459	2568.792	361.237	−18.9102
5200	494.280	2206.002	1515.915	1091.683	2618.210	357.333	−18.8393
5300	494.478	2255.440	1525.332	1099.777	2667.647	353.258	−18.7720
5400	494.664	2304.897	1534.576	1107.743	2717.105	349.014	−18.7080
5500	494.839	2354.372	1543.654	1115.587	2766.580	344.601	−18.6469
5600	495.004	2403.864	1552.572	1123.311	2816.072	340.019	−18.5888
5700	495.159	2453.373	1561.335	1130.919	2865.580	335.274	−18.5337
5800	495.306	2502.896	1569.948	1138.414	2915.104	330.366	−18.4811
5900	495.445	2552.434	1578.416	1145.800	2964.641	325.298	−18.4310
6000	495.576	2601.985	1586.744	1153.080	3014.192	320.077	−18.3834

TABLE 29. Fundamental vibrations, moments of inertia and enthalpies of formation for 1-ethynyl naphthalene $C_{10}H_7C{\equiv}CH$. The properties marked in bold were chosen for thermodynamic calculations

PM3												
	91.5	143	159	188	333	381	423	441	455	506	526	569
	609	635	745	769	788	818	821	851	862	899	917	932
	970	999	1015	1087	1103	1123	1136	1157	1177	1206	1233	1299
	1430	1479	1483	1580	1608	1688	1783	1793	1823	2329	3045	3052
	3053	3061	3064	3074	3077	3358						
AM1												
	94.9	144.6	166	196	344	390	435	455	482	530	532	595
	640	653	766	811	820	834	840	854	864	922	952	963
	978	998	1005	1148	1177	1190	1207	1211	1252	1291	1322	1368
	1462	1513	1526	1605	1632	1701	1763	1785	1801	2372	3175	3181
	3183	3186	3189	3195	3199	3452						
AM1 UHF												
	89.6	146	158	186	328	387	415	436	476	496	525	589
	626	635	737	791	800	815	825	836	855	888	912	941
	950	959	969	1140	1170	1182	1201	1207	1244	1286	1318	1399
	1450	1496	1506	1518	1590	1648	1671	1688	1702	2318	3178	3183
	3184	3188	3189	3196	3199	3449						
Gaussian 94:BP86/6-31G(d,p) (6D, 7F)												
	102	**132**	**171**	**200**	**337**	**359**	**431**	**441**	**462**	**479**	**507**	**532**
	565	**571**	**596**	**635**	**686**	**724**	**762**	**781**	**787**	**848**	**850**	**882**
	922	**938**	**954**	**1013**	**1029**	**1073**	**1139**	**1151**	**1163**	**1215**	**1224**	**1255**
	1344	**1384**	**1393**	**1433**	**1451**	**1510**	**1574**	**1586**	**1621**	**2142**	**3096**	**3099**
	3107	**3117**	**3120**	**3129**	**3132**	**3413**						

Method	Principal moments of inertia/10^{-40} gm·cm^2 I_a	I_b	I_c
PM3	563.676361	874.751349	1438.426751
AM1	566.425740	876.558758	1442.983773
AM1 UHF	568.214758	880.256936	1448.468
Gaussian 94[21]	**574.61762**	**894.85562**	**1469.4732**

Method	Enthalpy of formation/kcal·mol^{-1} $\Delta_f H°$(298.15 K)
PM3	92.82
AM1	96.10
AM1 UHF (spin=0.0; S^2=0.853439)	93.73
Gaussian 94[21]	83.75
Wang and Frenklach[47]*	**90.6**
NIST 94[35]**	90.0
Liebmann[26]	93.0
Marinov[28]	80.49

*C_p(298.15 K)=39.6 cal·K^{-1}·mol^{-1} and S(298.15 K)=91.2 cal·K^{-1}·mol^{-1}
**C_p(298.15 K)=41.5 cal·K^{-1}·mol^{-1} and S(298.15 K)=94.1 cal·K^{-1}·mol^{-1}

Method	Zero Point Energy and Ionization Potential Zero point energy/kcal·mol^{-1}	Ionization potential/eV
PM3	98.914	8.723
AM1	102.070	8.614
AM1 UHF	100.494	8.857
Gaussian 94 BP86/6-31g	95.161	
Liebmann[26]		8.03

*zero point vibrational energy

supplemented with values from the Gaussian 94 calculation. The internal moments of inertia and barrier values were taken from benzaldehyde listed by Ambrose *et al.*[3]

The problematic aspects of the Benson group values for molecules with unknown experimental data can be shown here. The groups used to define these molecules are 7×CB-/H (seven atoms of benzene ring type connected to H), 2×CBF-/CBF/CB/CB (two atoms of fused type rings each connected to a similar atom and two benzene type atoms), 1×CB-/C (one benzene type atom connected to a

TABLE 30. Thermodynamic properties of $C_{10}H_7C{\equiv}CH$ 1-ethynyl naphthalene (mol wt=152.195 520)

T (K)	C_p (J/mol K)	H_T-H_{298} (kJ/mol)	S_T (J/mol K)	$-(G_T-H_{298})/T$ (J/mol K)	H_T (kJ/mol)	$\Delta_f H_T$ (kJ/mol)	Log K
0	-------	−26.992	-------	-------	352.078	398.592	-------
100	62.064	−22.586	278.123	503.980	356.485	390.266	−210.9560
200	113.645	−13.935	336.032	405.709	365.135	384.217	−109.6691
298.15	169.895	0.000	391.974	391.974	379.070	379.070	−76.8335
300	170.915	0.315	393.028	391.977	379.386	378.984	−76.4241
400	221.646	20.020	449.365	399.314	399.091	374.787	−60.0139
500	262.749	44.319	503.416	414.778	423.389	371.474	−50.2676
600	295.265	72.283	554.310	433.838	451.353	368.793	−43.8220
700	321.217	103.154	601.846	454.484	482.224	366.643	−39.2487
800	342.319	136.365	646.162	475.706	515.436	364.988	−35.8370
900	359.781	171.497	687.521	496.969	550.567	363.808	−33.1934
1000	374.420	208.228	726.207	517.980	587.298	363.035	−31.0841
1100	386.809	246.306	762.490	538.576	625.376	362.629	−29.3615
1200	397.368	285.528	796.612	558.672	664.599	362.528	−27.9267
1300	406.417	325.729	828.785	578.224	704.799	362.668	−26.7132
1400	414.211	366.770	859.196	597.217	745.840	362.973	−25.6713
1500	420.953	408.536	888.009	615.651	787.607	363.431	−24.7687
1600	426.811	450.931	915.368	633.536	830.002	363.974	−23.9775
1700	431.921	493.873	941.400	650.886	872.944	364.560	−23.2778
1800	436.399	537.294	966.217	667.721	916.365	365.172	−22.6550
1900	440.336	581.135	989.920	684.059	960.206	365.777	−22.0968
2000	443.813	625.346	1012.597	699.923	1004.417	366.360	−21.5932
2100	446.895	669.885	1034.326	715.334	1048.955	366.902	−21.1376
2200	449.636	714.714	1055.180	730.310	1093.784	367.371	−20.7223
2300	452.082	759.802	1075.222	744.874	1138.872	367.783	−20.3429
2400	454.274	805.122	1094.510	759.043	1184.192	368.111	−19.9952
2500	456.243	850.649	1113.095	772.835	1229.720	368.327	−19.6741
2600	458.018	896.364	1131.024	786.269	1275.434	368.465	−19.3779
2700	459.622	942.247	1148.341	799.360	1321.318	368.484	−19.1041
2800	461.077	988.283	1165.083	812.124	1367.354	368.392	−18.8498
2900	462.399	1034.458	1181.286	824.576	1413.529	368.183	−18.6124
3000	463.604	1080.759	1196.983	836.730	1459.830	367.823	−18.3910
3100	464.705	1127.176	1212.202	848.597	1506.246	367.375	−18.1852
3200	465.714	1173.697	1226.972	860.192	1552.768	366.773	−17.9919
3300	466.639	1220.316	1241.317	871.525	1599.386	366.039	−17.8105
3400	467.491	1267.023	1255.261	882.607	1646.093	365.170	−17.6401
3500	468.276	1313.812	1268.824	893.449	1692.882	364.143	−17.4804
3600	469.001	1360.676	1282.026	904.060	1739.746	362.991	−17.3294
3700	469.672	1407.610	1294.885	914.450	1786.680	361.677	−17.1875
3800	470.294	1454.609	1307.419	924.627	1833.679	360.215	−17.0531
3900	470.871	1501.667	1319.643	934.600	1880.738	358.610	−16.9268
4000	471.409	1548.781	1331.571	944.375	1927.852	356.824	−16.8065
4100	471.909	1595.948	1343.217	953.962	1975.018	354.914	−16.6937
4200	472.376	1643.162	1354.595	963.366	2022.233	352.832	−16.5864
4300	472.813	1690.422	1365.715	972.594	2069.492	350.579	−16.4842
4400	473.221	1737.724	1376.590	981.653	2116.794	348.129	−16.3872
4500	473.604	1785.065	1387.229	990.548	2164.136	345.555	−16.2958
4600	473.964	1832.444	1397.642	999.285	2211.514	342.825	−16.2089
4700	474.301	1879.857	1407.839	1007.869	2258.928	339.946	−16.1264
4800	474.619	1927.303	1417.828	1016.306	2306.374	336.912	−16.0485
4900	474.918	1974.780	1427.617	1024.601	2353.851	333.725	−15.9743
5000	475.199	2022.286	1437.215	1032.758	2401.357	330.263	−15.9029
5100	475.466	2069.820	1446.628	1040.781	2448.890	326.786	−15.8366
5200	475.717	2117.379	1455.863	1048.674	2496.449	323.075	−15.7724
5300	475.955	2164.963	1464.927	1056.443	2544.033	319.203	−15.7116
5400	476.180	2212.570	1473.825	1064.090	2591.640	315.173	−15.6538
5500	476.393	2260.198	1482.565	1071.620	2639.269	310.985	−15.5987
5600	476.596	2307.848	1491.150	1079.035	2686.918	306.637	−15.5462
5700	476.788	2355.517	1499.588	1086.339	2734.588	302.136	−15.4966
5800	476.970	2403.205	1507.881	1093.536	2782.276	297.481	−15.4492
5900	477.144	2450.911	1516.037	1100.628	2829.981	292.673	−15.4041
6000	477.309	2498.634	1524.057	1107.618	2877.704	287.720	−15.3613

TABLE 31. Fundamental vibrations, moments of inertia and enthalpies of formation for the 1-ethynyl naphthalene radical. $C_{10}H_7C{\equiv}C\cdot$. The properties marked in bold were chosen for thermodynamic calculations

PM3												
	81.9	141	160	181	310	372	400	433	451	497	499	567
	605	629	733	770	785	814	824	905	913	926	977	1001
	1022	1087	1106	1124	1129	1155	1173	1208	1246	1291	1368	1400
	1475	1490	1561	1627	1684	1749	1792	2223	3030	3041	3050	3052
	3060	3065	3073									
AM1												
	82.2	150	158	186	312	389	405	443	477	505	526	594
	637	644	751	809	820	851	857	929	951	959	985	1000
	1012	1150	1177	1188	1204	1209	1245	1291	1324	1352	1404	1444
	1517	1522	1592	1646	1685	1736	1784	2198	3163	3170	3173	3180
	3184	3185	3194									
AM1 UHF												
	79.7	149	159	171	263	377	386	425	471	474	520	588
	608	640	729	793	800	819	848	891	902	946	948	955
	974	1139	1167	1181	1198	1206	1240	1283	1317	1375	1462	1476
	1490	1524	1543	1615	1643	1667	1690	2197	3170	3177	3182	3183
	3185	3191	3196									
Gaussian 94:BP86/6-31G(d,p) (6D, 7F)												
	92.2	**118**	**165**	**184**	**306**	**328**	**411**	**437**	**452**	**471**	**523**	**526**
	557	**628**	**684**	**723**	**755**	**779**	**788**	**848**	**861**	**895**	**934**	**948**
	967	**1015**	**1030**	**1076**	**1132**	**1151**	**1163**	**1198**	**1221**	**1255**	**1324**	**1374**
	1393	**1429**	**1438**	**1503**	**1541**	**1558**	**1604**	**1805**	**3102**	**3103**	**3113**	**3122**
	3123	**3132**	**3141**									

Principal moments of inertia/10^{-40} gm·cm^2

Method	I_a	I_b	I_c
PM3	552.027495	858.082950	1410.064722
AM1	555.540153	859.883565	1415.420170
AM1 UHF	556.923602	866.271415	1423.182177
Gaussian 94 ($Ir=0$)	**563.78083**	**873.50853**	**1435.8234**

Enthalpy of formation/kcal·mol^{-1}

Method	$\Delta_f H°$(298.15 K)
PM3	186.63
AM1	189.42
AM1 UHF (spin=0.5; S^2=1.481 263)	177.52
Gaussian 94[21]	152.10
NIST 94[35]	**166.1**

Zero Point Energy and Ionization Potential

Method	Zero point energy/kcal·mol^{-1}	Ionization potential/eV
PM3	90.532	8.739
AM1	93.452	8.561
AM1 UHF	92.448	9.289
Gaussian 94 BP86/6-31g	87.809*	

*zero point vibrational energy

carbon atom) and 1×CO-/CB/H (one CO group connected to a benzene type atom and a H atom). The values for the last group are not well known. When calculated with NIST 94,[35] which has the value for CO–/CB/H for the ΔH_f (298) and S_{298} only, we get for ΔH_f (298) of naphthaldehyde a value of 7.3 kcal/mol. However if we use the THERM program[40] we find no such group. The existing group is CO-/CD/H (a CO group connected to a double bond carbon and a H atom) which was estimated by Bozzelli in Ref. 32. If we use this group, we indeed get the NIST 94[35] value for ΔH_f(298) =7.3. But if we insist on having a CO-/CB/H group, then we should get it indirectly, using some manipulation: CO-/CB/H=CO-/CD/H+CO-/CB/O–CO-/CD/O. However this procedure gives us a ΔH_f (298) value of 2.81 kcal/mol. This gives us a difference of 4.5 kcal/mol, more than twice than the one given by Benson.[4] This clearly shows that not all the group values are consistent with each other. The $S^2=0.741$ value shows that the UHF calculation is close to a doublet, thus the molecule is UHF unstable. Table 39 lists all the literature and calculated molecular vibrations, moments of inertia and enthalpies of formation of 1-naphthaldehyde. Table 40 lists the thermodynamic data of 1-naphthaldehyde.

TABLE 32. Thermodynamic properties of the $C_{10}H_7C{\equiv}C\cdot$ 1-ethynyl naphthalene radical (mol wt=151.187 580)

T (K)	C_p (J/mol K)	H_T-H_{298} (kJ/mol)	S_T (J/mol K)	$-(G_T-H_{298})/T$ (J/mol K)	H_T (kJ/mol)	$\Delta_f H_T$ (kJ/mol)	Log K
0	-------	−26.598	-------	-------	668.364	710.644	-------
100	64.107	−22.058	285.855	506.432	672.905	703.952	−371.7699
200	110.921	−13.398	344.025	411.013	681.565	699.259	−188.4115
298.15	162.077	0.000	397.847	397.847	694.962	694.962	−128.4553
300	163.026	0.301	398.853	397.850	695.263	694.888	−127.7046
400	211.030	19.064	452.500	404.840	714.027	691.202	−97.5328
500	250.736	42.225	504.017	419.567	737.187	688.213	−79.5186
600	282.344	68.940	552.637	437.737	763.902	685.748	−67.5564
700	307.521	98.480	598.123	457.438	793.442	683.735	−59.0404
800	327.866	130.284	640.561	477.706	825.246	682.149	−52.6707
900	344.568	163.932	680.173	498.027	858.894	680.973	−47.7262
1000	358.459	199.104	717.218	518.114	894.066	680.143	−43.7763
1100	370.127	235.550	751.946	537.810	930.512	679.624	−40.5481
1200	380.006	273.070	784.586	557.028	968.032	679.359	−37.8592
1300	388.424	311.502	815.344	575.727	1006.465	679.292	−35.5852
1400	395.639	350.715	844.400	593.890	1045.677	679.350	−33.6349
1500	401.853	390.597	871.914	611.516	1085.559	679.528	−31.9457
1600	407.233	431.057	898.025	628.614	1126.020	679.762	−30.4669
1700	411.912	472.020	922.856	645.198	1166.982	680.015	−29.1611
1800	415.999	513.420	946.519	661.286	1208.382	680.274	−28.0002
1900	419.586	555.203	969.109	676.897	1250.166	680.507	−26.9610
2000	422.747	597.323	990.713	692.052	1292.286	680.704	−26.0250
2100	425.543	639.740	1011.408	706.770	1334.703	680.847	−25.1787
2200	428.026	682.421	1031.263	721.071	1377.384	680.908	−24.4087
2300	430.240	725.337	1050.339	734.975	1420.299	680.902	−23.7059
2400	432.220	768.462	1068.693	748.500	1463.424	680.805	−23.0620
2500	433.997	811.774	1086.373	761.664	1506.736	680.591	−22.4690
2600	435.598	855.255	1103.427	774.482	1550.218	680.294	−21.9220
2700	437.043	898.888	1119.894	786.972	1593.851	679.875	−21.4164
2800	438.353	942.659	1135.812	799.148	1637.622	679.342	−20.9470
2900	439.542	986.555	1151.216	811.024	1681.517	678.690	−20.5098
3000	440.626	1030.564	1166.135	822.614	1725.527	677.887	−20.1020
3100	441.615	1074.677	1180.600	833.930	1769.639	676.995	−19.7222
3200	442.521	1118.885	1194.635	844.984	1813.847	675.949	−19.3660
3300	443.352	1163.179	1208.265	855.787	1858.141	674.772	−19.0318
3400	444.116	1207.553	1221.512	866.349	1902.515	673.461	−18.7178
3500	444.819	1252.000	1234.396	876.682	1946.962	671.993	−18.4229
3600	445.469	1296.515	1246.936	886.793	1991.477	670.403	−18.1443
3700	446.071	1341.092	1259.150	896.693	2036.055	668.653	−17.8820
3800	446.628	1385.727	1271.053	906.388	2080.690	666.760	−17.6335
3900	447.145	1430.416	1282.661	915.888	2125.379	664.725	−17.3993
4000	447.626	1475.155	1293.988	925.199	2170.118	662.513	−17.1766
4100	448.074	1519.940	1305.047	934.330	2214.903	660.181	−16.9665
4200	448.492	1564.769	1315.849	943.285	2259.731	657.681	−16.7667
4300	448.883	1609.638	1326.407	952.073	2304.600	655.015	−16.5763
4400	449.248	1654.545	1336.731	960.698	2349.507	652.156	−16.3954
4500	449.591	1699.487	1346.831	969.167	2394.449	649.176	−16.2238
4600	449.912	1744.462	1356.716	977.485	2439.424	646.047	−16.0603
4700	450.214	1789.469	1366.395	985.657	2484.431	642.772	−15.9047
4800	450.497	1834.504	1375.877	993.688	2529.467	639.348	−15.7567
4900	450.765	1879.567	1385.168	1001.583	2574.530	635.775	−15.6154
5000	451.017	1924.657	1394.278	1009.346	2619.619	631.932	−15.4796
5100	451.254	1969.770	1403.211	1016.982	2664.733	628.080	−15.3515
5200	451.479	2014.907	1411.976	1024.494	2709.869	623.996	−15.2281
5300	451.691	2060.066	1420.578	1031.886	2755.028	619.757	−15.1103
5400	451.892	2105.245	1429.023	1039.163	2800.207	615.365	−14.9976
5500	452.083	2150.444	1437.316	1046.327	2845.406	610.818	−14.8897
5600	452.264	2195.661	1445.464	1053.382	2890.624	606.115	−14.7865
5700	452.435	2240.896	1453.470	1060.331	2935.859	601.262	−14.6878
5800	452.598	2286.148	1461.340	1067.177	2981.110	596.258	−14.5932
5900	452.753	2331.415	1469.079	1073.923	3026.378	591.104	−14.5025
6000	452.900	2376.698	1476.689	1080.573	3071.661	585.808	−14.4157

TABLE 33. Fundamental vibrations, moments of inertia and enthalpies of formation for 1-naphthol $C_{10}H_7OH$. The properties marked in bold were chosen for thermodynamic calculations

PM3												
	118.9	158	235	354	363	386	428	481	494	521	546	593
	596	741	782	788	817	828	892	918	919	967	994	1012
	1108	1111	1126	1143	1170	1187	1238	1275	1321	1373	1475	1498
	1512	1596	1608	1685	1782	1800	1829	3020	3051	3053	3062	3065
	3075	3075	3844									
PM3 UHF												
	116	153	225	355	357	367	414	475	488	492	541	564
	586	715	756	779	789	817	860	885	905	929	955	973
	1101	1105	1118	1138	1166	1182	1239	1268	1322	1368	1435	1479
	1484	1514	1573	1635	1694	1712	1727	3020	3053	3054	3063	3065
	3076	3076	3842									
AM1												
	54.6	126	164	243	347	399	444	506	516	524	563	609
	622	754	812	837	848	871	911	937	960	971	992	1003
	1169	1183	1187	1209	1220	1254	1306	1341	1397	1408	1518	1548
	1556	1623	1645	1710	1757	1797	1814	3179	3181	3182	3189	3193
	3198	3203	3477									
AM1 UHF												
	93.6	157	174	232	343	375	426	489	499	510	557	573
	614	721	784	816	828	860	873	902	932	948	956	967
	1161	1176	1179	1205	1214	1246	1307	1338	1384	1435	1478	1528
	1536	1564	1619	1660	1676	1704	1726	3183	3184	3187	3193	3196
	3201	3209	3470									
Kudchadker *et al.* (Ref. 24)												
	135	190	274	274	363	416	463	479	520	565	572	584
	627	710	744	768	791	852	877	923	942	957	970	1014
	1020	1082	1137	1144	1178	1178	1234	1234	1245	1276	1358	1377
	1404	1456	1464	1513	1577	1597	1632	3070	3070	3070	3070	3070
	3070	3070	3658									
IR spectrum NIST 1997												
								459	**467**	**479**	**522**	**570**
	583		**715**		**766**	**790**			**874**			
	1014	**1041**	**1081**	**1089**	**1152**	**1189**	**1239**	**1277**	**1359**	**1404**	**1462**	**1520**
	1591	**1634**	**1682**	**1718**	**1820**	**1828**	**1847**	**1905**	**1946**	**2859**	**2923**	**2967**
	3067		**3652**									
Gaussian 94 BP86/6-31G(d,p) (6D, 7F)												
	49.6	**170**	**220**	**255**	**286**	**411**	**453**	459	467	514	555	566
	618	**704**	709	**742**	763	775	**819**	**848**	860	**894**	**925**	**943**
	1021	1038	1078	1140	1151	1160	1178	1221	1252	1286	1376	1389
	1409	1445	1459	1521	1583	1604	1633	3055	3096	3103	3112	3119
	3127	**3135**	3689									

Method	Principal moments of inertia/10^{-40} gm·cm^2 I_a	I_b	I_c
PM3	428.332338	746.072564	1174.385152
PM3 UHF	429.663 445	749.721882	1179.371447
AM1	429.355275	753.767198	1183.120149
AM1 UHF	430.264245	757.668524	1187.930822
Kudchadker[24]	**430.2804**	**731.4813**	**1161.7634**
Gaussian 94[21]	435.9471	757.63548	1193.5822

Gaussian 94[21]: from phenol $-I_r=1.2236$ and V(2)=3468 cal and $\sigma_r=2$
Kudchadker [24]: $I_r=$**1.43385** and V(2)=**3193** cal

TABLE 33. Fundamental vibrations, moments of inertia and enthalpies of formation for 1-naphthol $C_{10}H_7OH$. The properties marked in bold were chosen for thermodynamic calculations—Continued.

Enthalpy of formation/kcal·mol^{-1}	
Method	$\Delta_f H°$(298.15 K)
PM3	−4.11
PM3 UHF (spin=0.0; S^2=.705721)	−5.60
AM1	−2.16
AM1 UHF (spin=0.0; S^2=.841723)	−4.57
Ribero Da Silva *et al.*[39]	**−7.36±0.38**
Columina *et al.*[15]	−7.14±0.26
Gaussian 94[21]	−10.90
NIST 94[35]	−6.1
Pedley & Rylance[36]	−7.1±0.2
Kudchadker[24]	−7.14

Zero Point Energy and Ionization Potential		
Method	Zero point energy/kcal·mol^{-1}	Ionization potential/eV
PM3	95.851	8.591
PM3 UHF	94.397	8.704
AM1	97.931	8.488
AM1 UHF	96.674	8.671
Gaussian 94 BP86/6-31g	92.045*	
Pedley & Rylance[36]		7.76±0.03

*zero point vibrational energy

3.20. 1-Naphthaldehyde Radical: $C_{10}H_7C{\cdot}O$

No calculations or estimations for this species were found in the literature. AM1 calculations for this species failed. The Gaussian 94 calculations served as the thermodynamic input. No internal rotation moment of inertia and barrier was taken into account. Table 41 lists all the literature and calculated molecular vibrations, moments of inertia and enthalpies of formation of the 1-naphthaldehyde radical. Table 42 lists the thermodynamic data of the 1-naphthaldehyde radical.

3.21. 4-Ethenyl-Phenyl-1-Vinyl: $C_6H_4C_2H(C_2H_2{\cdot})$

This curious radical is actually a benzene with two branches that can close to form a naphthalene molecule or, in reverse, it is the product of the ring opening of the naphthyl radical $C_{10}H_7{\cdot}$. It was calculated by Wang and Frenklach.[48] The internal rotation moment of inertia was calculated for a styrene radical[6] since the phenyl acetylene moment of internal rotation is 0. The rotation barrier was estimated to be 4.6 kcal/mol. Table 43 lists all the literature and calculated molecular vibrations, moments of inertia and enthalpies of formation of 4-ethynyl-phenyl-1-vinyl. Table 44 lists the thermodynamic data of 4-ethynyl-phenyl-1-vinyl.

4. Discussion

4.1. Fundamental Vibrations

In this study *ab initio* calculations were performed with Gaussian 94 for all the species involved, as well as MOPAC calculations. Gradient corrected density functional theory calculations were performed with Gaussian 94. Two different exchange and correlation functionals, BPW91 and BP86, with two basis sets, D95V and 6-31G(d,p), were used for naphthalene but only the last one was used for the rest of the species. The Gaussian 94 vibrations were used for thermodynamic calculations in all the cases where no experimental IR data were available. IR spectra are available[1] for naphthalene, methyl-naphthalene, ethyl-naphthalene, naphthol, and naphthaldehyde. In all the other cases, except naphthalene, the BP86/6-31G(d,p) vibrations were used to complement the missing IR frequencies. In Melius's database only naphthyl radical and naphthalene were found. Melius[32] explains that his BAC/MP4 method scales automatically all the *ab initio* calculated vibrations by 12%. Since not all the vibrations differ from the experimental values by the same percentage, it has been found[5] that Melius's calculated vibrations are 1%–3% low if less than 1000 cm^{-1}, 1%–3% high between 1000 and 1500 cm^{-1} and 1% low around 3000 cm^{-1}, while the average difference is less than 1%. Judging from our calculations we can agree with this statement, while our Gaussian 94 calculations[21] for naphthalene show an error roughly 10% high with the BPW91/D95V basis set, but almost no error with the BP86/6-31G basis set. The MOPAC calculations show very good correlation with the IR spectrum as well as with the Gaussian 94 calculations. Since the thermodynamic data are not very sensitive to the exact value of the vibrations, the Gaussian 94 BP86/6-31G values of the vibrations were used as is.

4.2. IR Spectrum

It is known that the IR spectra are a good indicator of the fundamental vibrations, but not necessarily a correct one.

TABLE 34. Thermodynamic properties of $C_{10}H_7OH$ naphthol (mol wt=144.172 920)

T (K)	C_p (J/mol K)	H_T-H_{298} (kJ/mol)	S_T (J/mol K)	$-(G_T-H_{298})/T$ (J/mol K)	H_T (kJ/mol)	$\Delta_f H_T$ (kJ/mol)	Log K
0	-------	−24.318	-------	-------	−55.112	−6.365	-------
100	53.661	−20.432	265.998	470.315	−51.226	−16.539	−3.5295
200	103.232	−12.663	317.874	381.189	−43.457	−24.272	−8.6659
298.15	154.318	0.000	368.709	368.709	−30.794	−30.794	−11.0027
300	155.242	0.286	369.666	368.712	−30.508	−30.905	−11.0360
400	201.597	18.190	420.851	375.377	−12.605	−36.343	−12.4926
500	240.338	40.350	470.139	389.440	9.555	−40.671	−13.4965
600	272.028	66.022	516.857	406.821	35.228	−44.068	−14.2332
700	297.891	94.561	560.799	425.712	63.767	−46.633	−14.7972
800	319.115	125.446	602.008	445.201	94.651	−48.441	−15.2410
900	336.663	158.262	640.640	464.793	127.467	−49.570	−15.5967
1000	351.282	192.681	676.890	484.209	161.886	−50.139	−15.8861
1100	363.543	228.440	710.963	503.290	197.645	−50.232	−16.1246
1200	373.893	265.326	743.051	521.947	234.532	−49.943	−16.3228
1300	382.681	303.166	773.335	540.130	272.372	−49.359	−16.4896
1400	390.185	341.819	801.977	557.820	311.025	−48.570	−16.6296
1500	396.627	381.168	829.122	575.010	350.374	−47.605	−16.7500
1600	402.186	421.115	854.901	591.704	390.321	−46.537	−16.8528
1700	407.008	461.581	879.432	607.914	430.786	−45.411	−16.9409
1800	411.210	502.496	902.818	623.653	471.702	−44.251	−17.0174
1900	414.889	543.805	925.151	638.938	513.011	−43.091	−17.0842
2000	418.124	585.459	946.516	653.787	554.665	−41.950	−17.1422
2100	420.982	627.417	966.987	668.217	596.623	−40.847	−17.1940
2200	423.517	669.645	986.631	682.247	638.851	−39.813	−17.2395
2300	425.773	712.111	1005.508	695.894	681.317	−38.834	−17.2801
2400	427.789	754.791	1023.672	709.175	723.997	−37.937	−17.3168
2500	429.596	797.662	1041.172	722.107	766.868	−37.148	−17.3491
2600	431.222	840.705	1058.054	734.706	809.910	−36.435	−17.3785
2700	432.690	883.901	1074.356	746.985	853.107	−35.838	−17.4057
2800	434.018	927.238	1090.116	758.960	896.444	−35.347	−17.4305
2900	435.224	970.701	1105.368	770.644	939.907	−34.970	−17.4527
3000	436.322	1014.279	1120.142	782.049	983.485	−34.734	−17.4732
3100	437.324	1057.962	1134.465	793.187	1027.168	−34.587	−17.4933
3200	438.241	1101.741	1148.364	804.070	1070.947	−34.586	−17.5114
3300	439.081	1145.608	1161.863	814.709	1114.814	−34.711	−17.5284
3400	439.854	1189.555	1174.982	825.113	1158.761	−34.965	−17.5445
3500	440.566	1233.577	1187.743	835.292	1202.782	−35.367	−17.5603
3600	441.222	1277.666	1200.163	845.256	1246.872	−35.889	−17.5747
3700	441.830	1321.819	1212.261	855.012	1291.025	−36.562	−17.5892
3800	442.393	1366.031	1224.051	864.569	1335.237	−37.375	−17.6026
3900	442.915	1410.297	1235.549	873.935	1379.502	−38.323	−17.6162
4000	443.401	1454.613	1246.769	883.116	1423.818	−39.439	−17.6289
4100	443.853	1498.976	1257.724	892.120	1468.181	−40.673	−17.6421
4200	444.275	1543.382	1268.424	900.952	1512.588	−42.067	−17.6547
4300	444.669	1587.830	1278.883	909.620	1557.035	−43.619	−17.6666
4400	445.037	1632.315	1289.110	918.129	1601.521	−45.351	−17.6784
4500	445.383	1676.836	1299.115	926.485	1646.042	−47.203	−17.6908
4600	445.706	1721.391	1308.908	934.692	1690.597	−49.199	−17.7029
4700	446.011	1765.977	1318.497	942.757	1735.183	−51.334	−17.7150
4800	446.297	1810.592	1327.890	950.683	1779.798	−53.614	−17.7275
4900	446.566	1855.236	1337.095	958.475	1824.441	−56.037	−17.7399
5000	446.820	1899.905	1346.119	966.138	1869.111	−58.702	−17.7516
5100	447.060	1944.599	1354.970	973.676	1913.805	−61.394	−17.7648
5200	447.286	1989.317	1363.653	981.092	1958.522	−64.295	−17.7770
5300	447.500	2034.056	1372.175	988.391	2003.262	−67.342	−17.7895
5400	447.702	2078.816	1380.542	995.576	2048.022	−70.534	−17.8021
5500	447.894	2123.596	1388.758	1002.650	2092.802	−73.869	−17.8148
5600	448.076	2168.395	1396.831	1009.617	2137.600	−77.350	−17.8276
5700	448.249	2213.211	1404.763	1016.480	2182.417	−80.968	−17.8406
5800	448.413	2258.044	1412.560	1023.242	2227.250	−84.725	−17.8537
5900	448.569	2302.893	1420.227	1029.906	2272.099	−88.618	−17.8669
6000	448.718	2347.758	1427.767	1036.474	2316.964	−92.640	−17.8803

TABLE 35. Fundamental vibrations, moments of inertia and enthalpies of formation for the 1-naphthoxy radical $C_{10}C_7O\cdot$. The properties marked in bold were chosen for thermodynamic calculations

PM3												
	77.9	144	208	314	367	424	467	478	481	550	596	618
	708	779	783	813	818	878	907	908	971	982	1017	1097
	1109	1126	1128	1158	1174	1218	1259	1308	1348	1354	1433	1537
	1596	1655	1762	1784	1898	3043	3043	3052	3060	3061	3070	3074
AM1												
	89.9	154	216	311	379	435	491	494	509	570	626	629
	727	815	829	848	866	912	931	956	984	988	1011	1164
	1173	1181	1198	1206	1236	1301	1342	1366	1409	1419	1484	1568
	1624	1677	1748	1769	1988	3164	3166	3180	3185	3188	3194	3195
AM1 UHF												
	90.8	150	208	309	362	418	465	493	506	567	607	619
	710	791	817	823	856	873	896	943	946	951	976	1156
	1163	1176	1195	1206	1232	1295	1332	1408	1461	1473	1511	1539
	1602	1630	1682	1694	1900	3173	3175	3184	3190	3193	3196	3201
Gaussian 94 BP86/6-31G(d,p) (6D, 7F)												
	120	**167**	**225**	**279**	**401**	**445**	**453**	**458**	**516**	**524**	**563**	**639**
	701	**706**	**747**	**767**	**787**	**855**	**865**	**866**	**933**	**942**	**964**	**1019**
	1044	**1068**	**1116**	**1134**	**1151**	**1210**	**1234**	**1275**	**1353**	**1366**	**1419**	**1431**
	1479	**1511**	**1545**	**1555**	**1598**	**3098**	**3099**	**3110**	**3114**	**3124**	**3132**	**3134**

Principal moments of inertia/10^{-40} gm·cm^2

Method	I_a	I_b	I_c
PM3	411.682883	747.649687	1159.286148
AM1	415.365028	745.593449	1160.945663
AM1 UHF	417.323284	747.652378	1164.908855
Gaussian 94	**421.13955**	**755.32463**	**1176.4642**

Enthalpy of formation/kcal·mol^{-1}

Method	$\Delta_f H°$(298.15 K)
PM3	26.27697
AM1	29.24373
AM1 UHF (Spin=0.5; S^2=1.38577)	16.267920
Gaussian 94[21]	17.03
NIST 94[35]	**27.6**
Marinov[28]	28.0

Zero Point Energy and Ionization Potential

Method	Zero point energy/kcal·mol^{-1}	Ionization potential/eV
PM3	86.616	8.27945
AM1	89.905	8.22682
AM1 UHF	89.073	9.14667
Gaussian 94 BP86/6-31g	84.68814*	

*zero point vibrational energy

Looking at the assignment of vibrations in the literature it is possible to see that some of the bands are not pure, but, rather, the sum of two or more vibrations. Therefore the use of the IR spectrum as is can only approximate the real vibrational spectrum of the molecule. In the present work, wherever available, the IR spectra[1] were used and supplemented with the missing vibrations from the Gaussian 94 calculations. The two spectra were compared and the values missing from the IR were added from the Gaussian 94. As mentioned above, it was found that the lack of an exact assignment has an influence, which is roughly a quarter of the uncertainty of our calculated thermodynamic values, i.e., ±0.1 kcal/mol.

4.3. Enthalpies of Formation

It has been found in practice that while MOPAC and other *ab initio* programs give results regarding the fundamental vibrations of the molecules in close relation to each other, the predictions of the enthalpy of formation can differ by up to 70 kcal/mol. The mean absolute error of the AM1 method was found to be 12 kcal/mol.[16,45] Some authors[47] have tried methods to improve these results. It is found that Benson's group additivity method is by far more reliable than any other estimate. But even this method does not give a definite answer since there are disputes among different groups of

TABLE 36. Thermodynamic properties of the $C_{10}H_7O$ naphthoxy radical (mol wt=143.164 980)

T (K)	C_p (J/mol K)	H_T-H_{298} (kJ/mol)	S_T (J/mol K)	$-(G_T-H_{298})/T$ (J/mol K)	H_T (kJ/mol)	$\Delta_f H_T$ (kJ/mol)	Log K
0	-------	−23.522	-------	-------	91.956	136.469	-------
100	54.610	−19.465	274.753	469.405	96.013	127.965	−75.9210
200	97.438	−11.981	324.932	384.838	103.497	121.295	−43.1959
298.15	146.882	0.000	373.015	373.015	115.478	115.478	−32.9906
300	147.807	0.273	373.926	373.018	115.751	115.380	−32.8659
400	194.604	17.453	423.027	379.395	132.931	110.672	−27.9408
500	233.177	38.914	470.756	392.928	154.392	107.107	−25.0959
600	263.730	63.819	516.079	409.714	179.298	104.407	−23.2538
700	287.976	91.450	558.624	427.981	206.928	102.403	−21.9678
800	307.531	121.259	598.399	446.826	236.737	100.995	−21.0196
900	323.574	152.839	635.577	465.756	268.318	100.117	−20.2902
1000	336.920	185.884	670.381	484.497	301.362	99.676	−19.7104
1100	348.138	220.153	703.034	502.895	335.631	99.613	−19.2375
1200	357.643	255.454	733.744	520.866	370.933	99.856	−18.8428
1300	365.749	291.634	762.700	538.365	407.113	100.340	−18.5082
1400	372.701	328.566	790.065	555.376	444.044	100.990	−18.2188
1500	378.694	366.143	815.989	571.893	481.621	101.787	−17.9673
1600	383.886	404.278	840.599	587.925	519.756	102.669	−17.7451
1700	388.404	442.898	864.010	603.482	558.376	103.596	−17.5469
1800	392.353	481.940	886.325	618.581	597.418	104.549	−17.3693
1900	395.820	521.352	907.633	633.238	636.831	105.498	−17.2089
2000	398.876	561.090	928.016	647.471	676.568	106.428	−17.0629
2100	401.580	601.116	947.544	661.298	716.594	107.321	−16.9303
2200	403.983	641.396	966.282	674.738	756.874	108.148	−16.8083
2300	406.125	681.904	984.288	687.808	797.382	108.922	−16.6963
2400	408.042	722.614	1001.613	700.524	838.092	109.620	−16.5933
2500	409.763	763.505	1018.306	712.904	878.984	110.216	−16.4972
2600	411.313	804.561	1034.408	724.962	920.039	110.739	−16.4083
2700	412.713	845.763	1049.958	736.712	961.241	111.155	−16.3260
2800	413.982	887.099	1064.990	748.169	1002.577	111.469	−16.2493
2900	415.134	928.555	1079.538	759.346	1044.034	111.676	−16.1772
3000	416.184	970.122	1093.630	770.256	1085.601	111.749	−16.1097
3100	417.143	1011.789	1107.292	780.908	1127.268	111.738	−16.0475
3200	418.020	1053.548	1120.550	791.316	1169.026	111.590	−15.9886
3300	418.826	1095.391	1133.426	801.489	1210.869	111.322	−15.9334
3400	419.566	1137.311	1145.940	811.437	1252.789	110.932	−15.8815
3500	420.249	1179.302	1158.112	821.169	1294.780	110.402	−15.8333
3600	420.879	1221.359	1169.960	830.693	1336.837	109.758	−15.7873
3700	421.462	1263.476	1181.499	840.019	1378.955	108.970	−15.7447
3800	422.002	1305.650	1192.746	849.154	1421.128	108.050	−15.7040
3900	422.504	1347.875	1203.715	858.106	1463.354	107.002	−15.6664
4000	422.970	1390.149	1214.417	866.880	1505.628	105.794	−15.6305
4100	423.405	1432.468	1224.867	875.485	1547.947	104.474	−15.5974
4200	423.810	1474.829	1235.075	883.925	1590.308	103.003	−15.5660
4300	424.189	1517.229	1245.052	892.208	1632.708	101.381	−15.5360
4400	424.543	1559.666	1254.808	900.338	1675.145	99.586	−15.5078
4500	424.875	1602.137	1264.352	908.322	1717.616	97.679	−15.4819
4600	425.187	1644.641	1273.694	916.164	1760.119	95.635	−15.4574
4700	425.480	1687.174	1282.841	923.868	1802.652	93.458	−15.4346
4800	425.755	1729.736	1291.802	931.441	1845.214	91.145	−15.4136
4900	426.014	1772.325	1300.584	938.885	1887.803	88.696	−15.3939
5000	426.259	1814.938	1309.193	946.205	1930.417	86.011	−15.3747
5100	426.489	1857.576	1317.636	953.406	1973.054	83.306	−15.3582
5200	426.707	1900.236	1325.920	960.490	2015.714	80.399	−15.3419
5300	426.913	1942.917	1334.050	967.462	2058.395	77.351	−15.3270
5400	427.108	1985.618	1342.032	974.325	2101.096	74.165	−15.3132
5500	427.293	2028.338	1349.870	981.082	2143.816	70.840	−15.3005
5600	427.468	2071.076	1357.571	987.736	2186.555	67.377	−15.2887
5700	427.635	2113.832	1365.139	994.291	2229.310	63.780	−15.2781
5800	427.793	2156.603	1372.577	1000.749	2272.081	60.048	−15.2683
5900	427.943	2199.390	1379.891	1007.114	2314.868	56.186	−15.2593
6000	428.086	2242.191	1387.085	1013.387	2357.670	52.197	−15.2514

TABLE 37. Fundamental vibrations, moments of inertia and enthalpies of formation for 1-ethanol naphthalene $C_{10}H_7C_2H_4OH$. The properties marked in bold were chosen for thermodynamic calculations

PM3												
	44.4	94	130	171	189	293	322	392	416	444	459	488
	523	532	533	591	651	754	773	794	815	821	894	908
	927	945	946	971	1001	1015	1048	1075	1097	1101	1112	1135
	1142	1148	1167	1209	1243	1264	1312	1327	1343	1377	1427	1434
	1468	1484	1507	1585	1610	1691	1784	1801	1828	2942	2948	3021
	3023	3024	3030	3051	3053	3063	3071	3076	3842			
AM1												
	129.5	181	218	245	301	318	370	439	472	513	527	549
	564	620	642	702	748	786	823	831	851	864	918	951
	961	968	990	1017	1030	1079	1133	1157	1181	1190	1195	1203
	1211	1218	1269	1296	1318	1336	1346	1375	1400	1420	1443	1474
	1523	1530	1554	1608	1634	1701	1760	1790	1807	3016	3088	3098
	3137	3180	3181	3182	3186	3189	3195	3199	3462			
AM1 UHF												
	41.9	66.5	96.2	159	167	246	326	350	383	426	464	484
	494	516	543	602	639	740	790	807	819	849	885	912
	938	946	958	966	970	1000	1105	1154	1175	1188	1192	1204
	1209	1212	1257	1289	1316	1345	1363	1380	1410	1424	1431	1454
	1506	1516	1520	1540	1597	1653	1675	1703	1709	3017	3035	3090
	3099	3178	3181	3185	3186	3190	3196	3199	3480			
Gaussian 94: BP86/6-31G(d,p) (6D, 7F)												
	46.6	81.3	127	**170**	**176**	**249**	**318**	**374**	**407**	**426**	**447**	**463**
	482	**505**	**548**	**577**	**642**	**686**	**720**	**764**	**779**	**782**	**826**	**836**
	858	**876**	**913**	**916**	**934**	**948**	**984**	**1029**	**1037**	**1060**	**1078**	**1140**
	1154	**1159**	**1170**	**1183**	**1221**	**1226**	**1248**	**1303**	**1347**	**1368**	**1380**	**1383**
	1396	**1435**	**1448**	**1455**	**1469**	**1515**	**1579**	**1597**	**1622**	**2902**	**2975**	**3012**
	3024	**3094**	**3095**	**3102**	**3106**	**3120**	**3121**	**3129**	**3642**			

Principal moments of inertia/10^{-40} gm·cm^2

Method	I_a	I_b	I_c
PM3	572.761841	1428.942927	1919.379046
AM1	704.597684	1128.565829	1643.193314
AM1 UHF	661.156659	1278.151993	1777.572928
Gaussian 94	659.73401	1301.2903	1781.9701

Brinkmann and Burcat[6]: $I_r(-CH_2CH_2OH)=$ **202.848**, ROSYM=**2**, V(3)=**2.87** kcal·mol^{-1} [Chao *et al.*][11]
Brinkmann and Burcat[6]: $I_r(-CH_2OH)=$ **47.5277**, ROSYM=**2**, V(3)=**2.75** kcal·mol^{-1} [Chao *et al.*]
Brinkmann and Burcat[6]: $I_r(-OH)=$ **1.39517**, ROSYM=**2**, V(3)=**1.03** kcal·mol^{-1} [Chao *et al.*]

Enthalpy of formation/kcal·mol^{-1}

Method	$\Delta_f H°$(298.15 K)
PM3	−13.12
AM1	−46.10
AM1 UHF (Spin=.00; $S^2=0.780135$)	−20.09
Gaussian 94[21]	−15.84
NIST 94[35]*	**−12.6**

*C_p(298.15 K)=47.8 cal·K^{-1}·mol^{-1} and S(298.15 K)=111.3 cal·K^{-1}·mol^{-1}

Zero Point Energy and Ionization Potential

Method	Zero point energy/kcal·mol^{-1}	Ionization potential/eV
PM3	131.128	8.896
AM1	137.372	8.580
AM1 UHF	133.160	9.012
Gaussian 94 BP86/6-31g	127.494*	

*zero point vibrational energy

TABLE 38. Thermodynamic properties of $C_{10}H_7CH_2CH_2OH$ 1-naphthyl-ethanol (mol wt=172.226 68)

T (K)	C_p (J/mol K)	H_T-H_{298} (kJ/mol)	S_T (J/mol K)	$-(G_T-H_{298})/T$ (J/mol K)	H_T (kJ/mol)	$\Delta_f H_T$ (kJ/mol)	Log K
0	-------	−31.880	-------	-------	−84.598	−16.807	-------
100	77.018	−26.389	313.833	577.721	−79.107	−31.498	−3.8381
200	132.235	−16.038	383.398	463.586	−68.756	−42.690	−13.2289
298.15	195.002	0.000	447.806	447.806	−52.718	−52.718	−17.2811
300	196.188	0.362	449.016	447.809	−52.357	−52.892	−17.3382
400	256.694	23.076	513.941	456.252	−29.643	−61.376	−19.8144
500	307.184	51.359	576.844	474.126	−1.359	−68.079	−21.5020
600	347.669	84.177	636.566	496.271	31.459	−73.344	−22.7318
700	380.278	120.631	692.695	520.366	67.912	−77.415	−23.6690
800	407.013	160.037	745.276	545.229	107.319	−80.450	−24.4057
900	429.303	201.886	794.540	570.223	149.167	−82.564	−24.9972
1000	448.115	245.782	840.773	594.990	193.064	−83.911	−25.4802
1100	464.122	291.415	884.253	619.330	238.697	−84.596	−25.8806
1200	477.821	338.530	925.240	643.132	285.812	−84.737	−26.2156
1300	489.598	386.916	963.963	666.335	334.197	−84.446	−26.4995
1400	499.759	436.396	1000.627	688.916	383.677	−83.837	−26.7403
1500	508.559	486.822	1035.414	710.866	434.104	−82.957	−26.9487
1600	516.207	538.069	1068.485	732.192	485.351	−81.899	−27.1285
1700	522.876	590.031	1099.985	752.908	537.312	−80.727	−27.2844
1800	528.713	642.617	1130.040	773.031	589.898	−79.477	−27.4212
1900	533.839	695.750	1158.767	792.583	643.031	−78.195	−27.5417
2000	538.357	749.364	1186.266	811.584	696.646	−76.912	−27.6478
2100	542.353	803.404	1212.632	830.058	750.685	−75.654	−27.7431
2200	545.899	857.820	1237.945	848.027	805.101	−74.462	−27.8277
2300	549.056	912.571	1262.283	865.513	859.852	−73.326	−27.9041
2400	551.875	967.620	1285.711	882.536	914.901	−72.280	−27.9734
2500	554.402	1022.936	1308.292	899.117	970.217	−71.357	−28.0354
2600	556.672	1078.492	1330.081	915.276	1025.773	−70.523	−28.0923
2700	558.718	1134.263	1351.129	931.031	1081.544	−69.827	−28.1449
2800	560.568	1190.229	1371.482	946.400	1137.510	−69.259	−28.1932
2900	562.244	1246.371	1391.183	961.400	1193.652	−68.831	−28.2372
3000	563.767	1302.672	1410.270	976.046	1249.954	−68.578	−28.2778
3100	565.154	1359.119	1428.778	990.353	1306.401	−68.435	−28.3171
3200	566.420	1415.699	1446.742	1004.336	1362.981	−68.476	−28.3529
3300	567.579	1472.400	1464.189	1018.008	1419.682	−68.675	−28.3867
3400	568.642	1529.212	1481.149	1031.381	1476.493	−69.036	−28.4187
3500	569.619	1586.126	1497.647	1044.468	1533.407	−69.585	−28.4495
3600	570.519	1643.133	1513.707	1057.281	1590.415	−70.290	−28.4781
3700	571.349	1700.227	1529.350	1069.829	1647.509	−71.187	−28.5061
3800	572.116	1757.401	1544.597	1082.123	1704.682	−72.263	−28.5324
3900	572.827	1814.648	1559.467	1094.173	1761.930	−73.514	−28.5584
4000	573.486	1871.964	1573.978	1105.987	1819.246	−74.980	−28.5828
4100	574.099	1929.344	1588.147	1117.575	1876.626	−76.599	−28.6076
4200	574.669	1986.783	1601.988	1128.945	1934.064	−78.425	−28.6311
4300	575.200	2044.276	1615.517	1140.104	1991.558	−80.454	−28.6535
4400	575.697	2101.822	1628.746	1151.059	2049.103	−82.715	−28.6755
4500	576.160	2159.415	1641.689	1161.819	2106.696	−85.133	−28.6978
4600	576.595	2217.053	1654.357	1172.389	2164.334	−87.740	−28.7195
4700	577.002	2274.733	1666.762	1182.776	2222.014	−90.527	−28.7411
4800	577.384	2332.452	1678.914	1192.986	2279.734	−93.503	−28.7627
4900	577.743	2390.209	1690.823	1203.025	2337.490	−96.664	−28.7842
5000	578.080	2448.000	1702.498	1212.898	2395.282	−100.132	−28.8044
5100	578.399	2505.824	1713.949	1222.611	2453.106	−103.647	−28.8264
5200	578.699	2563.679	1725.183	1232.168	2510.961	−107.423	−28.8470
5300	578.982	2621.563	1736.209	1241.574	2568.845	−111.389	−28.8678
5400	579.249	2679.475	1747.034	1250.835	2626.757	−115.541	−28.8885
5500	579.502	2737.413	1757.665	1259.953	2684.694	−119.878	−28.9092
5600	579.742	2795.375	1768.109	1268.935	2742.657	−124.399	−28.9298
5700	579.969	2853.361	1778.372	1277.782	2800.642	−129.097	−28.9508
5800	580.184	2911.368	1788.461	1286.501	2858.650	−133.970	−28.9715
5900	580.389	2969.397	1798.380	1295.093	2916.679	−139.016	−28.9922
6000	580.583	3027.446	1808.137	1303.562	2974.727	−144.224	−29.0132

TABLE 39. Fundamental vibrations, moments of inertia and enthalpies of formation for 1-naphthaldehyde $C_{10}H_7CHO$. The properties marked in bold were chosen for thermodynamic calculations

PM3												
	65.8	130	162	223	256	374	380	429	459	511	512	559
	573	660	748	783	793	816	855	888	919	933	963	992
	1007	1025	1084	1109	1130	1141	1165	1185	1220	1229	1294	1404
	1441	1472	1493	1582	1604	1686	1780	1797	1827	1969	2891	3020
	3039	3049	3051	3062	3070	3076						
AM1												
	59.7	97.5	168	219	244	379	392	445	480	517	538	578
	588	689	760	813	839	848	898	915	957	962	974	996
	1005	1016	1145	1183	1195	1209	1217	1256	1297	1319	1374	1417
	1478	1514	1528	1604	1628	1704	1755	1789	1803	2034	3105	3160
	3180	3182	3185	3193	3195	3201						
AM1 UHF												
	50.3	90	158	205	247	362	383	426	475	488	531	556
	579	682	735	786	819	832	881	889	923	940	949	968
	972	1001	1138	1177	1187	1205	1212	1249	1294	1315	1400	1408
	1457	1501	1517	1521	1592	1656	1674	1709	1711	2025	3100	3167
	3182	3182	3184	3190	3193	3198						
IR spectrum NIST 1997												
											507	**527**
		651	**713**			**770**		**806**	**862**	**888**		
		971	**1027**	**1058**				**1172**	**1218**			**1347**
	1373	**1404**		**1460**	**1517**	**1579**		**1631**	**1713**	**1775**	**1811**	**1945**
	2322	**2355**	**2724**	**2837**	**3069**	**3399**						
Gaussian 94 BP86/6-31G(d,p) (6D, 7F)												
	87.7	**112**	**180**	**206**	**227**	**342**	**398**	**421**	**463**	**492**	504	527
	616	639	720	**758**	**759**	783	**789**	843	849	908	**921**	**947**
	955	978	1002	1032	**1079**	**1141**	**1155**	1164	1209	**1221**	**1252**	1351
	1373	1392	**1411**	1437	1452	1518	**1571**	**1588**	1623	1711	2836	3097
	3098	3109	3117	3124	3129	3134						

Principal moments of inertia/10^{-40}*gram·cm^2

Method	I_a	I_b	I_c
PM3	=509.815884	=998.216261	1508.025178
AM1	503.642093	1015.222241	1517.933632
AM1 UHF	=506.066850	1016.724457	=1521.191542
Gaussian 94	**=504.06846**	**=1041.3646**	**−1545.4331**

Ambrose[3]: I_r=**1.48**, ROSYM=**2**, and V(3)=**4.9** kcal·mol^{-1}

Enthalpy of formation/kcal·mol^{-1}

Method	$\Delta_f H°$(298.15 K)
PM3	7.58
AM1	11.71
AM1 UHF (Spin=0.0; S^2=0.741397)	9.88
Gaussian 94[21]	6.69
NIST 94[35]	**7.3**
Liebmann[26]	7.0

Zero Point Energy and Ionization Potential

Method	Zero point energy/kcal·mol^{-1}	Ionization potential/eV
PM3	98.532	9.135
AM1	101.908	
AM1 UHF	100.449	9.247
Liebmann[26]		8.43
Gaussian 94 BP86/6-31g	95.429*	

*zero point vibrational energy

TABLE 40. Thermodynamic properties of $C_{10}H_7CHO$ naphthaldehyde (mol wt=156.057 51)

T (K)	C_p (J/mol K)	H_T-H_{298} (kJ/mol)	S_T (J/mol K)	$-(G_T-H_{298})/T$ (J/mol K)	H_T (kJ/mol)	$\Delta_f H_T$ (kJ/mol)	Log K
0	-------	−25.754	-------	-------	4.790	54.590	-------
100	59.086	−21.565	275.098	490.746	8.978	44.657	−35.0682
200	108.350	−13.279	330.580	396.974	17.264	37.115	−24.1951
298.15	162.397	0.000	383.881	383.881	30.543	30.543	−21.2555
300	163.410	0.301	384.888	383.884	30.845	30.431	−21.2226
400	215.311	19.292	439.162	390.932	49.835	25.057	−20.0089
500	259.404	43.099	492.102	405.905	73.642	21.050	−19.4059
600	295.227	70.895	542.682	424.523	101.438	18.199	−19.0637
700	323.966	101.908	590.431	444.849	132.451	16.336	−18.8493
800	347.059	135.500	635.254	465.878	166.044	15.314	−18.7024
900	365.741	171.173	677.248	487.056	201.716	15.006	−18.5927
1000	380.985	208.534	716.598	508.064	239.077	15.256	−18.5050
1100	393.529	247.280	753.517	528.717	277.823	15.956	−18.4312
1200	403.940	287.169	788.219	548.911	317.712	16.997	−18.3660
1300	412.648	328.011	820.905	568.589	358.554	18.285	−18.3075
1400	419.988	369.653	851.762	587.724	400.196	19.723	−18.2524
1500	426.217	411.972	880.956	606.308	442.515	21.285	−18.2022
1600	431.540	454.866	908.638	624.347	485.410	22.896	−18.1545
1700	436.117	498.255	934.941	641.850	528.798	24.514	−18.1088
1800	440.076	542.069	959.983	658.834	572.613	26.116	−18.0656
1900	443.520	586.253	983.871	675.317	616.796	27.671	−18.0246
2000	446.531	630.759	1006.699	691.320	661.302	29.165	−17.9851
2100	449.176	675.547	1028.551	706.862	706.090	30.580	−17.9483
2200	451.512	720.584	1049.502	721.964	751.127	31.887	−17.9128
2300	453.583	765.841	1069.619	736.645	796.384	33.103	−17.8793
2400	455.426	811.293	1088.963	750.924	841.836	34.203	−17.8479
2500	457.074	856.919	1107.588	764.820	887.462	35.162	−17.8172
2600	458.552	902.702	1125.544	778.351	933.245	36.016	−17.7885
2700	459.883	948.625	1142.876	791.533	979.168	36.726	−17.7618
2800	461.084	994.674	1159.622	804.382	1025.217	37.302	−17.7364
2900	462.173	1040.838	1175.822	816.912	1071.381	37.738	−17.7119
3000	463.162	1087.105	1191.507	829.139	1117.649	38.007	−17.6886
3100	464.062	1133.467	1206.709	841.074	1164.010	38.167	−17.6679
3200	464.885	1179.915	1221.455	852.732	1210.458	38.157	−17.6477
3300	465.639	1226.442	1235.773	864.123	1256.985	38.000	−17.6287
3400	466.330	1273.041	1249.684	875.260	1303.584	37.694	−17.6110
3500	466.967	1319.706	1263.211	886.152	1350.249	37.219	−17.5949
3600	467.553	1366.433	1276.374	896.809	1396.976	36.606	−17.5793
3700	468.095	1413.215	1289.192	907.242	1443.759	35.823	−17.5653
3800	468.597	1460.050	1301.682	917.458	1490.593	34.883	−17.5518
3900	469.062	1506.934	1313.860	927.467	1537.477	33.789	−17.5401
4000	469.494	1553.861	1325.741	937.276	1584.405	32.511	−17.5286
4100	469.896	1600.831	1337.339	946.893	1631.374	31.099	−17.5189
4200	470.270	1647.840	1348.667	956.324	1678.383	29.512	−17.5098
4300	470.620	1694.884	1359.737	965.578	1725.428	27.749	−17.5010
4400	470.947	1741.963	1370.560	974.659	1772.506	25.788	−17.4931
4500	471.253	1789.073	1381.147	983.575	1819.616	23.695	−17.4867
4600	471.540	1836.213	1391.508	992.331	1866.756	21.444	−17.4810
4700	471.810	1883.381	1401.652	1000.932	1913.924	19.040	−17.4761
4800	472.063	1930.574	1411.588	1009.385	1961.118	16.479	−17.4723
4900	472.301	1977.793	1421.324	1017.693	2008.336	13.762	−17.4693
5000	472.526	2025.034	1430.868	1025.861	2055.577	10.778	−17.4660
5100	472.738	2072.298	1440.227	1033.894	2102.841	7.767	−17.4651
5200	472.937	2119.581	1449.409	1041.797	2150.125	4.527	−17.4637
5300	473.127	2166.885	1458.419	1049.573	2197.428	1.128	−17.4632
5400	473.305	2214.206	1467.265	1057.226	2244.750	−2.429	−17.4634
5500	473.475	2261.545	1475.951	1064.761	2292.089	−6.143	−17.4641
5600	473.635	2308.901	1484.484	1072.180	2339.444	−10.015	−17.4654
5700	473.788	2356.272	1492.868	1079.487	2386.815	−14.037	−17.4675
5800	473.932	2403.658	1501.109	1086.686	2434.202	−18.212	−17.4700
5900	474.070	2451.058	1509.212	1093.779	2481.602	−22.535	−17.4730
6000	474.201	2498.472	1517.181	1100.769	2529.015	−27.000	−17.4768

TABLE 41. Fundamental vibrations, moments of inertia and enthalpies of formation for 1-naphthaldehyde radical $C_{10}H_7C{\cdot}O$. The properties marked in bold were chosen for thermodynamic calculations

PM3												
	91	155	163	188	336	362	425	455	486	511	535	555
	646	744	767	789	797	838	877	917	920	969	1001	1016
	1085	1103	1124	1136	1158	1176	1203	1232	1279	1424	1470	1482
	1490	1578	1605	1686	1781	1794	1823	2176	3045	3049	3052	3053
	3062	3072	3075									
AM1 UHF												
	82	154	155	166	250	365	378	428	478	493	529	574
	581	658	740	790	820	824	863	892	925	946	950	969
	974	1136	1169	1180	1201	1207	1238	1282	1317	1398	1450	1491
	1512	1517	1590	1652	1679	1703	1708	2247	3174	3177	3181	3184
	3189	3193	3198									
Gaussian 94: BP86/6-31G(d,p) (6D, 7F)												
	78.3	**153**	**170**	**178**	**213**	**327**	**392**	**430**	**459**	**494**	**511**	**523**
	612	**624**	**723**	**727**	**763**	**782**	**791**	**846**	**854**	**905**	**927**	**948**
	962	**994**	**1022**	**1071**	**1133**	**1149**	**1155**	**1194**	**1222**	**1243**	**1360**	**1379**
	1374	**1434**	**1447**	**1507**	**1562**	**1584**	**1622**	**1809**	**3097**	**3099**	**3107**	**3114**
	3118	**3126**	**3128**									

Method	Principal moments of inertia/10^{-40} gm·cm^2 I_a	I_b	I_c
PM3	525.005680	967.432958	1492.433147
AM1			
AM1 UHF	529.848970	976.233805	1506.077736
Gaussian 94	**513.15652**	**1005.7912**	**1519.2712**

Method	Enthalpy of formation/kcal·mol^{-1} $\Delta_f H°$(298.15 K)
PM3	34.17
AM1	
AM1 UHF	37.70
Gaussian 94	41.64
Marinov[28], estimate	**41.8±3.**

Method	Zero Point Energy and Ionization Potential Zero point energy/kcal·mol^{-1}	Ionization potential/eV
PM3	92.576	8.791
AM1		
AM1 UHF	92.873	8.951
Gaussian 94 BP86/6-31g	87.860*	

*zero point vibrational energy

researchers regarding specific values of some of the groups (see naphthaldehyde). In this research, the NIST 94 program[35] was used to evaluate all the species possible.

In Table 45 all the values for the enthalpy of formation, known and found for the species are listed at 298 K.

4.4. MOPAC Calculations

In this study, four kinds of calculations have been performed: PM3, AM1, AM1/UHF and a few PM3/UHF. The results of the stable molecules should be treated in a different way from the results of the radicals. Since the PM3 and AM1 are RHF calculations, then AM1/UHF (and PM3/UHF) should give the same result as AM1 (or PM3) calculations for stable molecules. Indeed, in a few attempts for smaller molecules (DNO, *p*-benzo-quinone, nitro-azetidine)[10] where PM3/UHF were calculated, the results were identical with these of PM3. The reason why AM1 and AM1/UHF are not identical for stable species but just close is a cause for concern. Since the similarity in some cases is bigger between PM3 and AM1/UHF than AM1 to AM1/UHF, it means that during optimization slightly different conformations of the molecule were achieved. Because of the size of these molecules, the small changes resulted in small differences in the computed geometry as well as in the computed energy of the naphtalenic molecule. The S^2 results show for almost all species, stable and radicals, an UHF unstable condition. This should serve as justification to use average values of the RHF methods calculated for our thermodynamic purposes. The S^2 values usually show that the UHFs are not acceptable calculations for naphthalene compounds.

In the case of the radicals, the enthalpies of formation obtained are less reliable, judging from the evidence that the

TABLE 42. Thermodynamic properties of the $C_{10}H_7C{\cdot}O$ naphthaldehyde radical (mol wt=155.049 69)

T (K)	C_p (J/mol K)	H_T-H_{298} (kJ/mol)	S_T (J/mol K)	$-(G_T-H_{298})/T$ (J/mol K)	H_T (kJ/mol)	$\Delta_f H_T$ (kJ/mol)	Log K
0	-------	−26.717	-------	-------	148.174	193.741	-------
100	65.488	−22.133	287.332	508.659	152.758	185.703	−105.4713
200	111.136	−13.382	346.183	413.093	161.509	179.972	−57.5710
298.15	161.693	0.000	399.949	399.949	174.891	174.891	−42.2918
300	162.638	0.300	400.952	399.952	175.191	174.804	−42.1029
400	210.528	19.017	454.468	406.925	193.909	170.610	−34.5803
500	250.231	42.127	505.872	421.617	217.019	167.367	−30.1657
600	281.880	68.794	554.402	439.746	243.685	164.851	−27.2727
700	307.116	98.290	599.821	459.407	273.181	162.940	−25.2344
800	327.525	130.056	642.209	479.639	304.948	161.569	−23.7214
900	344.286	163.673	681.785	499.925	338.565	160.693	−22.5526
1000	358.228	198.820	718.802	519.983	373.711	160.230	−21.6213
1100	369.939	235.245	753.510	539.651	410.136	160.128	−20.8609
1200	379.853	272.748	786.136	558.846	447.639	160.322	−20.2268
1300	388.299	311.167	816.883	577.524	486.058	160.747	−19.6899
1400	395.536	350.368	845.931	595.668	525.259	161.326	−19.2271
1500	401.768	390.240	873.438	613.277	565.132	162.046	−18.8257
1600	407.162	430.693	899.543	630.360	605.585	162.842	−18.4725
1700	411.853	471.649	924.371	646.931	646.541	163.673	−18.1588
1800	415.950	513.044	948.031	663.006	687.935	164.523	−17.8788
1900	419.544	554.823	970.618	678.607	729.714	165.359	−17.6269
2000	422.711	596.939	992.220	693.751	771.830	166.168	−17.3986
2100	425.512	639.353	1012.914	708.460	814.244	166.931	−17.1918
2200	428.000	682.031	1032.767	722.753	856.922	167.619	−17.0025
2300	430.217	724.944	1051.842	736.649	899.835	168.246	−16.8292
2400	432.200	768.066	1070.195	750.167	942.958	168.787	−16.6701
2500	433.980	811.377	1087.875	763.324	986.268	169.215	−16.5226
2600	435.582	854.856	1104.928	776.137	1029.748	169.565	−16.3863
2700	437.030	898.488	1121.394	788.621	1073.380	169.795	−16.2604
2800	438.341	942.258	1137.312	800.791	1117.149	169.915	−16.1433
2900	439.532	986.153	1152.715	812.663	1161.044	169.919	−16.0335
3000	440.616	1030.161	1167.635	824.248	1205.052	169.778	−15.9311
3100	441.607	1074.273	1182.099	835.559	1249.164	169.546	−15.8364
3200	442.513	1118.479	1196.134	846.609	1293.370	169.165	−15.7472
3300	443.345	1162.773	1209.763	857.408	1337.664	168.656	−15.6635
3400	444.109	1207.146	1223.010	867.967	1382.037	168.016	−15.5850
3500	444.814	1251.593	1235.894	878.296	1426.484	167.223	−15.5118
3600	445.464	1296.107	1248.434	888.404	1470.998	166.310	−15.4423
3700	446.066	1340.684	1260.648	898.301	1515.575	165.242	−15.3775
3800	446.623	1385.318	1272.551	907.993	1560.210	164.032	−15.3160
3900	447.141	1430.007	1284.159	917.490	1604.898	162.685	−15.2588
4000	447.622	1474.745	1295.486	926.799	1649.637	161.166	−15.2042
4100	448.071	1519.530	1306.544	935.927	1694.422	159.529	−15.1536
4200	448.489	1564.359	1317.347	944.880	1739.250	157.729	−15.1055
4300	448.880	1609.227	1327.904	953.666	1784.118	155.767	−15.0597
4400	449.245	1654.134	1338.228	962.289	1829.025	153.620	−15.0165
4500	449.588	1699.076	1348.328	970.756	1873.967	151.353	−14.9764
4600	449.909	1744.051	1358.213	979.072	1918.942	148.941	−14.9384
4700	450.211	1789.057	1367.892	987.242	1963.948	146.387	−14.9028
4800	450.495	1834.092	1377.374	995.271	2008.983	143.688	−14.8696
4900	450.763	1879.155	1386.665	1003.164	2054.047	140.843	−14.8382
5000	451.015	1924.244	1395.774	1010.926	2099.135	137.743	−14.8079
5100	451.253	1969.358	1404.708	1018.560	2144.249	134.626	−14.7810
5200	451.477	2014.494	1413.473	1026.070	2189.386	131.290	−14.7546
5300	451.690	2059.653	1422.075	1033.461	2234.544	127.804	−14.7301
5400	451.891	2104.832	1430.520	1040.736	2279.723	124.169	−14.7072
5500	452.081	2150.030	1438.813	1047.898	2324.922	120.385	−14.6857
5600	452.262	2195.248	1446.961	1054.952	2370.139	116.453	−14.6655
5700	452.434	2240.483	1454.967	1061.900	2415.374	112.376	−14.6469
5800	452.597	2285.734	1462.837	1068.745	2460.626	108.155	−14.6294
5900	452.752	2331.002	1470.575	1075.490	2505.893	103.792	−14.6132
6000	452.899	2376.284	1478.186	1082.139	2551.176	99.292	−14.5983

TABLE 43. Fundamental vibrations, moments of inertia and enthalpies of formation for the 4-ethenyl-phenyl-1-vinyl radical $C_6H_4C_2H(C_2H_2\cdot)$. The properties marked in bold were chosen for thermodynamic calculations

PM3												
	188.6	210	311	340	412	436	450	492	553	566	634	714
	778	780	797	856	919	955	968	994	1004	1018	1049	1084
	1100	1125	1140	1181	1246	1261	1309	1373	1414	1479	1749	1817
	1881	2328	2952	3067	3077	3081	3090	3106	3170			
AM1												
	197	218	301	353	412	436	474	524	543	616	657	733
	821	833	845	903	939	958	989	1029	1060	1088	1115	1152
	1160	1182	1204	1243	1275	1322	1357	1420	1465	1508	1724	1816
	1871	2344	3089	3188	3202	3203	3208	3228	3284			
AM1 UHF												
	165	189	316	346	376	442	461	486	499	615	652	727
	741	770	789	837	885	904	923	997	1055	1064	1119	1147
	1164	1181	1189	1239	1258	1333	1360	1423	1445	1457	1472	1532
	1604	1800	3078	3184	3205	3210	3210	3219	3250			
Wang and Frenklach (Ref. 48)												
	89	193	204	220	270	373	407	422	434	494	503	582
	598	661	734	758	772	775	790	815	858	859	907	935
	1072	1079	1102	1112	1194	1257	1273	1335	1472	1526	1622	1645
	1727	2192	2847	2940	2942	2952	2955	3188	3194			
Gaussian 94:BP86/6-31G(d,p) (6D, 7F)												
	152	**206**	**264**	**322**	**336**	**380**	**443**	**504**	**540**	**548**	**585**	**659**
	675	**704**	**761**	**781**	**810**	**816**	**882**	**890**	**915**	**951**	**1003**	**1021**
	1087	**1117**	**1134**	**1154**	**1172**	**1257**	**1270**	**1321**	**1332**	**1368**	**1474**	**1487**
	1591	**1932**	**3035**	**3097**	**3098**	**3111**	**3113**	**3119**	**3129**			

Method	Principal moments of inertia/10^{-40} gm·cm^2 I_a	I_b	I_c
PM3	315.472104	526.627064	670.696646
AM1	316.395543	526.284356	672.060821
AM1 UHF	327.541489	517.989282	675.868204
Gaussian 94*	**313.01037**	**540.20658**	**699.49573**

*$I_r(-C_2H)=$ **0**; $I_r(-CH{=}CH\cdot)=$ **27.3405**; ROSYM=2V(3)= **4.4** kcal·mol^{-1}

Method	Enthalpy of formation/kcal·mol^{-1} $\Delta_f H°(0\ K)$	$\Delta_f H°(298.15\ K)$	$\Delta_f H°(300\ K)$
PM3		182.04	
AM1		191.39	
AM1 UHF (spin=0.5; S^2=2.431692)		176.51	
Gaussian 94		180.11	
NIST 94[35]		**147.5**	
Wang and Frenklach[48]		149.5	

Method	Zero Point Energy and Ionization Potential Zero point energy/kcal·mol^{-1}	Ionization potential/eV
PM3	83.638	
AM1	86.485	9.115
AM1 UHF	83.413	9.073
Gaussian 94	79.405*	

*zero point vibrational energy

UHF values are usually very different from the values of PM3 and AM1, and these values are closer to group additivity estimates.

4.5. Accuracy of Calculations

There are no known experimental measurements for the thermodynamic properties of the listed naphthalene derivatives. The existing reported values, except for naphthalene itself, are based on calculations and estimations using different methods. A comparison of our data with the very few points mentioned in the literature is given in Table 46. Generally, it can be said that our calculations are of the highest accuracy available today, and none of them has a problematic background. Exception should be made only of the en-

TABLE 44. Thermodynamic properties of the 4-ethenyl-phenyl-1-vinyl radical $C_6H_4C_2H(C_2H_2\cdot)$ (mol wt=127.165 580)

T (K)	C_p (J/mol K)	H_T-H_{298} (kJ/mol)	S_T (J/mol K)	$-(G_T-H_{298})/T$ (J/mol K)	H_T (kJ/mol)	$\Delta_f H_T$ (kJ/mol)	Log K
0	-------	−23.203	-------	-------	593.937	634.110	-------
100	53.073	−19.234	270.570	462.911	597.906	626.969	−332.2593
200	96.570	−11.852	320.015	379.275	605.288	621.652	−169.0760
298.15	144.841	0.000	367.587	367.587	617.140	617.140	−115.8031
300	145.728	0.269	368.486	367.590	617.409	617.065	−115.1364
400	189.847	17.116	416.648	373.858	634.256	613.510	−88.3506
500	225.155	37.939	462.967	387.088	655.079	610.837	−72.3618
600	252.653	61.886	506.551	403.407	679.026	608.758	−61.7437
700	274.392	88.278	547.192	421.080	705.418	607.143	−54.1829
800	292.022	116.628	585.021	439.236	733.768	605.945	−48.5258
900	306.637	146.583	620.286	457.416	763.723	605.145	−44.1328
1000	318.939	177.879	653.248	475.369	795.019	604.686	−40.6220
1100	329.398	210.309	684.150	492.960	827.449	604.540	−37.7512
1200	338.351	243.708	713.205	510.115	860.848	604.656	−35.3587
1300	346.054	277.938	740.599	526.801	895.078	604.982	−33.3342
1400	352.709	312.884	766.494	543.006	930.024	605.454	−31.5966
1500	358.481	348.450	791.030	558.730	965.590	606.062	−30.0906
1600	363.505	384.555	814.330	573.983	1001.695	606.748	−28.7712
1700	367.894	421.130	836.502	588.778	1038.270	607.478	−27.6051
1800	371.742	458.116	857.641	603.133	1075.256	608.234	−26.5676
1900	375.127	495.463	877.833	617.063	1112.603	608.989	−25.6381
2000	378.114	533.128	897.152	630.588	1150.268	609.729	−24.8001
2100	380.759	571.074	915.666	643.725	1188.214	610.438	−24.0417
2200	383.108	609.270	933.434	656.493	1226.410	611.087	−23.3510
2300	385.200	647.687	950.511	668.907	1264.827	611.689	−22.7199
2400	387.068	686.303	966.945	680.985	1303.443	612.221	−22.1412
2500	388.742	725.095	982.780	692.743	1342.235	612.658	−21.6076
2600	390.245	764.045	998.057	704.193	1381.185	613.029	−21.1150
2700	391.597	803.139	1012.811	715.352	1420.279	613.298	−20.6591
2800	392.818	842.360	1027.075	726.232	1459.500	613.472	−20.2355
2900	393.921	881.698	1040.879	736.845	1498.838	613.544	−19.8405
3000	394.920	921.141	1054.250	747.203	1538.281	613.487	−19.4717
3100	395.828	960.679	1067.215	757.318	1577.819	613.352	−19.1278
3200	396.654	1000.304	1079.795	767.200	1617.444	613.083	−18.8048
3300	397.406	1040.007	1092.012	776.859	1657.147	612.699	−18.5015
3400	398.093	1079.783	1103.886	786.303	1696.923	612.198	−18.2163
3500	398.721	1119.624	1115.435	795.543	1736.764	611.558	−17.9480
3600	399.296	1159.525	1126.676	804.585	1776.665	610.809	−17.6944
3700	399.824	1199.482	1137.623	813.439	1816.622	609.918	−17.4552
3800	400.309	1239.489	1148.293	822.111	1856.629	608.898	−17.2285
3900	400.755	1279.542	1158.697	830.609	1896.682	607.751	−17.0144
4000	401.167	1319.639	1168.848	838.938	1936.779	606.447	−16.8108
4100	401.546	1359.775	1178.759	847.106	1976.915	605.033	−16.6183
4200	401.897	1399.947	1188.439	855.119	2017.087	603.470	−16.4350
4300	402.221	1440.153	1197.900	862.981	2057.293	601.757	−16.2603
4400	402.521	1480.390	1207.150	870.698	2097.530	599.872	−16.0940
4500	402.800	1520.657	1216.199	878.276	2137.797	597.876	−15.9361
4600	403.059	1560.950	1225.055	885.718	2178.090	595.745	−15.7855
4700	403.299	1601.268	1233.726	893.031	2218.408	593.482	−15.6418
4800	403.523	1641.609	1242.219	900.217	2258.749	591.083	−15.5050
4900	403.731	1681.972	1250.542	907.282	2299.112	588.550	−15.3743
5000	403.926	1722.355	1258.700	914.229	2339.495	585.781	−15.2485
5100	404.107	1762.757	1266.701	921.062	2379.897	582.993	−15.1297
5200	404.277	1803.176	1274.550	927.785	2420.316	580.003	−15.0150
5300	404.435	1843.612	1282.252	934.401	2460.752	576.873	−14.9054
5400	404.584	1884.063	1289.813	940.912	2501.203	573.606	−14.8005
5500	404.723	1924.528	1297.238	947.324	2541.668	570.200	−14.6999
5600	404.853	1965.007	1304.532	953.638	2582.147	566.655	−14.6034
5700	404.975	2005.498	1311.699	959.857	2622.638	562.978	−14.5111
5800	405.090	2046.002	1318.743	965.984	2663.142	559.165	−14.4225
5900	405.199	2086.516	1325.668	972.022	2703.656	555.221	−14.3373
6000	405.300	2127.041	1332.480	977.973	2744.181	551.151	−14.2558

TABLE 45. Listed values of the enthalpy of formation at 298 K for naphthalene species in kcal/mol

Name	PM3	AM1	AMI /UHF	Wang and Frenklach[48]	Marinov *et al.*[28]	NIST 94[a]	Politzer[b] (Melius)	Experimental[1] (literature)[c]
Naphthalene $C_{10}H_8$	40.67	40.58	38.74	35.8 35.92[d]	37.46	36.9	29.94 (25.22)	35.99
Naphthyl radical $C_{10}H_7\cdot$	95.74	98.29	88.78	94.7	98.94	95.8	88.30 (98.94)	
Naphthyne $C_{10}H_6$	145.04	157.	140.	119.7		···	113.48	
1,2 Dihydro-naphthalene $C_{10}H_{10}$	28.86	27.28	26.5	34.42[e]	31.59	···	26.80	(28.0)
$C_{10}H_9\cdot$	53.58	52.92	39.50		54.86	···	54.56	
Methyl naphthalene $C_{10}H_7CH_3$	32.62	33.96	31.90		29.66	28.0	22.34	27.75 (27.93)
Methyl naphthyl radical $C_{10}H_7CH_2\cdot$	69.64	71.35	54.03		67.95	65.2	57.18	(60.4)
Ethyl naphthalene $C_{10}H_7C_2H_5$	27.56		26.69		24.80	23.2	18.45	(23.16)
Ethyl naphthyl radical $C_{10}H_7C_2H_4\cdot$		65.05	60.07			···	67.14	
β-ethyl naphthyl radical $C_{10}H_7CH\cdot-CH_3$	57.99	59.83	47.27			52.7	48.58	
Vinyl naphthalene $C_{10}H_7C_2H_3$		59.04	56.09		52.99	51.4	48.04	(51.0)
Vinyl naphthyl $C_{10}H_7CH{=}CH\cdot$		109.08	99.87	112.3		109.2	106.23	
β-ethyl naphthyl $C_{10}H_7C\cdot{=}CH_2$	102.0		85.34		98.52	···	85.87	
Naphthyl acetylene $C_{10}H_7C_2H$	92.81	96.1	93.73	90.6	80.49	90.0	83.75	(93.0)
Naphthyl acetyl radical $C_{10}H_7C_2\cdot$	186.62	189.42	177.52			166.1	152.1	
Naphthol $C_{10}H_7OH$	−4.1	−2.16	−4.57	−7.14[f]		−6.1	−10.90	−7.36 −(7.1)
Naphthoxy radical $C_{10}H_7O\cdot$	26.28	29.24	16.27		28.0	27.6	17.03	
Naphthyl Ethanol $C_{10}H_7CH_2OH$	−13.2	−46.10	−20.09			−12.6	−15.84	
Naphthaldehyde $C_{10}H_7CHO$	7.57	11.71	9.87		7.3	7.3	6.69	(7.0)
Naphthaldehyde radical $C_{10}H_7C\cdot O$	34.17		37.70		41.8	···	41.64	
4-ethynyl-phenyl 1-vinyl radical $C_2HC_6H_4C_2H\cdot$	182.04			149.5		147.5	180.11	

[a]Estimates made with the program NIST 94 (Ref. 35).
[b]Estimates from Gaussian 94 according to Habibollazadeh *et al.* (Ref. 22). In parentheses are the Melius values (Ref. 31).
[c]Nonexperimental values quoted in the literature.
[d]Dorofeeva and Gurvich (Ref. 18).
[e]Dorofeeva and Gurvich (Ref. 19).
[f]Kudchadker *et al.* (Ref. 24).

thalpy of formation of the 1-naphthyl-α-ethyl radical, the enthalpy of formation of which had to be estimated with a very high error margin.

5. Conclusions

In the present investigation it has been shown again that it is very hard to rely on semiempirical calculations when they are the only source for evaluation of the enthalpy of formation. However the differences caused by the different methods, AM1, PM3 or AM1/UHF, for other thermodynamic properties are negligible. Although for the sake of consistency only the Gaussian 94 vibrations were used, the present evidence shows that by using the MOPAC vibrations no significant differences appear in the results.

TABLE 46. Comparison of the thermodynamic data with the literature

Compound	T (K)	NIST 94 C_p (cal/mol K)	NIST 94 S (cal/mol K)	Dorofeeva C_p (cal/mol K)	Dorofeeva S (cal/mol K)	Stull *et al.* C_p (cal/mol K)	Stull *et al.* S (cal/mol K)	Wang and Frenklach[48] C_p (cal/mol K)	Wang and Frenklach[48] S (cal/mol K)	This study C_p (cal/mol K)	This study S (cal/mol K)
Naphthalene	300	33.3	79.5	31.79	79.99	31.89	80.42	31.6	80.2	31.749	79.653
	1000	78.7	146.7	78.81	147.75	78.38	147.36			78.674	147.148
Naphthyl radical	300	32.6	86.5					30.3	83.2	31.809	84.358
	1000	74.9	151.0							74.537	149.311
Naphthyne $C_{10}H_6$	300							30.5	82.2	31.787	83.261
Dihydronaph-	300			34.1	86.82					34.406	85.89
thalene $C_{10}H_{10}$	1000			86.52	160.2					86.379	159.510
$C_{10}H_7CH_3$	300	38.9	91.3	38.07	90.13	38.33	90.45			37.992	91.379
	1000	90.5	168.5	91.06	168.83	91.21	168.99			92.414	170.431
$C_{10}H_7CH_2\cdot$	300	39.2	89.9							38.030	90.763
	1000	88.1	166.1							88.287	167.899
$C_{10}H_7CH_2CH_3$	300	44.7	100.6	44.16	99.64	44.30	100.22			43.768	97.383
	1000	103.0	189.1	103.7	189.63	103.79	189.95			105.545	187.931
$C_{10}H_7CH\cdot CH_3$	300	44.2	97.9							44.665	100.839
$C_{10}H_7CH{=}CH_2$	300	43.2	96.9							41.771	96.063
	1000	96.3	180.6							96.433	180.316
$C_{10}H_7CH{=}CH\cdot$	300	40.7	100.2					39.9	100.8	41.579	96.871
$C_{10}H_7C{\equiv}CH$	300	41.5	94.4					39.6	91.2	40.850	93.936
	1000	89.3	172.8							89.488	173.568
Naphthol	300	38.2	89.6	35.71	88.79[a]					37.771	88.199
	1000	83.8	163.2	83.39	161.91					84.018	161.656
$C_{10}H_7CH_2CH_2OH$	300	47.8	111.3							46.915	107.322
	1000	107.2	204.2							107.322	201.127
Naphthaldehyde	300		98.4								91.991
$C_6H_4(C{\equiv}CH)C_2H_2\cdot$	300							39.6	91.5	34.830	88.070

[a]Reference of naphthol as taken by Dorofeeva from Kudchadker *et al.* (Ref. 24).

6. References

[1] H. Y. Afeefy, J. F. Liebman, and S. E. Stein, "Neutral Thermochemical Data" in *NIST Standard Reference Database Number 69*, edited by W. G. Mallard and P. J. Linstrom (National Institute of Standards and Technology, Gaithersburg, MD, 1997); ⟨http://webbook.nist.gov⟩.

[2] R. Alberty, and T. M. Bloomstein, "Standard Chemical Thermodynamic Properties of Alkylnaphthalene Isomer Groups" J. Phys. Chem. Ref. Data **14**, 821 (1985).

[3] D. Ambrose, J. Connett, J. H. S. Green, J. L. Hales, A. J. Head, and J. F. Martin, "Physical and Thermodynamic Properties of Benzaldehyde," J. Chem. Thermodyn. **7**, 1143 (1975).

[4] S. Benson, *Thermochemical Kinetics* (Wiley, New York, 1976).

[5] R. J. Berry, D. R. F. Burgess, Jr., M. R. Nyden, M. R. Zachariah, C. F. Melius, and M. Schwarz, "Halon Thermochemistry: Calculated Enthalpies of Formation of Chlorofluoro-methanes," J. Phys. Chem. **100**, 7405 (1996).

[6] U. Brinkmann and A. Burcat, "A Program for Calculating Moments of Inertia of a Molecule" Technion Aerospace Reports TAE 382 (October 1979).

[7] L. D. Brouver, W. Muller-Markgraf, and J. Troe, "Thermal Decomposition of Toluene," J. Phys. Chem. **92**, 4905 (1988).

[8] A. Burcat, F. J. Zeleznik, and B. J. McBride, B. J. "Ideal Gas Thermodynamic Properties for Phenyl, Phenoxy and o-Biphenyl Radicals" NASA Rpt. TM-83800 (January 1985).

[9] A. Burcat and B. McBride, "1997 Ideal Gas Thermodynamic Data for Combustion and Air-Pollution Use," Technion Aerospace Reports TAE 804 (June 1997). Available at (⟨ftp://ftp.technion.ac.il/pub/supported/aetdd/thermodynamics⟩).

[10] A. Burcat, "The Ideal Gas Thermodynamic Properties of Propellants and Explosive Compounds," Technion Aerospace Reports TAE 824 (June 1998).

[11] J. Chao, K. R. Hall, K. N. Marsh, and R. C. Wilhoit, "Thermodynamic Properties of Organic Oxygen Compounds in the Carbon Range C_1–C_4. Part II," J. Phys. Chem. Ref. Data **15**, 1369 (1986).

[12] S. S. Chen, S. A. Kudchadker, and R. C. Wilhoit, "Thermodynamic Properties of Normal and Deuterated Naphthalenes," J. Phys. Chem. Ref. Data **8**, 527 (1979).

[13] R. D. Chirico, S. E. Knipmeyer, A. Nguyen, and W. V. Steele, "The Thermodynamic Properties to the Temperature 700 K of Naphthalene and 2,7-Dimethylnaphthalene," J. Chem. Thermodyn. **25**, 1461 (1993).

[14] M. Colomina, P. Jimenez, and C. Turrion, J. Chem. Thermodyn. **14**, 779 (1982).

[15] M. Colomina, M. V. Roux, and C. Turrion, "Thermochemical Properties of Naphthalene Compounds," J. Chem. Thermodyn. **6**, 571 (1974).

[16] M. J. S. Dewar, E. G. Zobisch, F. Healy, and J. J. Stewart, J. Am. Chem. Soc. **107**, 3902 (1985).

[17] O. V. Dorofeeva, L. V. Gurvich, and S. J. Cyvin, "On the Calculation of Thermodynamic Properties of Polycyclic Aromatic Hydrocarbons," Thermochim. Acta **102**, 59 (1986).

[18] O. V. Dorofeeva and L. V. Gurvich, "Thermodynamic Properties of Aromatic Hydrocarbons in the Gaseous Phase," Institute for High Temperatures, USSR Academy of Sciences, Preprint 1-238 (Moscow 1988) (in Russian).

[19] O. V. Dorofeeva and L. V. Gurvich, L. V. "Thermodynamic Properties of Hydrogenated Derivatives of Naphthalene, Anthracene and Phenantrene in the Gaseous Phase," Institute for High Temperatures, USSR Academy of Sciences, Preprint 1-239 (Moscow 1988) (in Russian).

[20] M. Frenkel, G. J. Kabo, K. N. Marsh, G. N. Roganov, and R. C. Wilhoit, *Thermodynamics of Organic Compounds in the Gas State* (Thermodynamics Research Center, College Station, Texas, 1994), Vols. I and II.

[21] *Gaussian 94*, edited by M. J. Frisch *et al.* (Gaussian Inc. Pittsburgh, PA, 1995).

[22] D. Habibollahzadeh, M. E. Griece, M. Concha, J. S. Murray, and P. Politzer, "Nonlocal Density Functional Calculation of Gas Phase Heats of Formation," J. Comput. Chem. **16**, 654 (1995).

[23] M. Head-Gordon, and J. A. Pople, "Internal Rotation in Conjugated Molecules: Substituted Ethylenes and Benzenes," J. Chem. Phys. **97**, 1147 (1993).

[24] S. A. Kudchadker, A. P. Kudchadker, and B. J. Zwolinski, "Ideal Gas Thermodynamic Properties of 1- and 2-Naphtol," J. Chem. Soc., Faraday Trans. 2 **74**, 1515 (1978).

[25] J. B. Lagowski, I. G. Csizmadia, and G. J. Vancso, "*Ab Initio* Study of Selected Alkyl Substituted Benzenes: Toluene, Ethylbenzene and Isopropylbenzene," J. Mol. Struct.: THEOCHEM **258**, 341 (1992).

[26] J. F. Liebmann, "Gas Phase Ion and Neutral Thermochemistry," J. Phys. Chem. Ref. Data Suppl. **17** (1998).

[27] J. Lielmezs, F. Bennett, Jr., and D. G. McFee, "Thermodynamic Functions for Naphthalene," Thermochim. Acta **47**, 287 (1981).

[28] M. N. Marinov, W. J. Pitz, C. K. Westbrook, M. J. Castaldi, and S. M. Senkan, "Modeling of Aromatic and Polycyclic Aromatic Hydrocarbon Formation in Premixed Methane and Ethane Flames," Combust. Sci. Technol. **116–117**, 211 (1996).

[29] B. J. McBride and S. Gordon, "Computer Program for Calculating and Fitting Thermodynamic Functions," NASA Rpt. 1271 (November 1992).

[30] D. F. McMillan, and D. M. Golden, "Hydrocarbon Bond Dissociation Energies," Annu. Rev. Phys. Chem. **33**, 493 (1982).

[31] C. Melius, A database for 4000 species calculated using the BAC/MP4 and BAC/MP2 method at Sandia National Laboratories and partially available on the Internet at ⟨http://herzberg.ca.sandia.gov/~melius/index.html⟩.

[32] C. F. Melius, "Thermochemical Modeling Application to Decomposition of Energetic Materials." in *Chemistry and Physics of Energetic Materials*. edited by S. N. Bulusu (Kluwer Academic, Dordrecht, 1990), pp. 21–49.

[33] D. E. Milligan, E. D. Becker, and K. S. Pitzer, "Thermodynamic Functions of Alkylnaphthalenes from 298 to 1500 K," J. Am. Chem. Soc. **78**, 2707 (1956).

[34] National Institute of Standards and Technology (NIST), WebBook, 1997; ⟨http://webbook.nist.gov/chemistry⟩.

[35] NIST 94, see S. E. Stein, 1994.

[36] J. B. Pedley and J. Rylance, J. *Thermochemical Data of Organic Compounds* (University of Sussex, Sussex, UK, 1977).

[37] J. B. Pedley, R. D. Naylor, and S. P. Kirby, *Thermochemical Data of Organic Compounds*. 2nd ed. (Chapman and Hall, London, 1986).

[38] U. Pfahl, K. Fieweger, and G. Adomeit, "Self Ignition of Diesel-Relevant Hydrocarbon-Air Mixtures Under Engine Conditions," 26th Combustion Symposium, 1996, pp. 781–789.

[39] M. A. Ribero Da Silva, M. D. M. C. Ribero Da Silva, and G. Pilcher, "Enthalpies of Combustion of 1-Hydroxy-Naphthalene," J. Chem. Thermodyn. **20**, 969 (1988).

[40] E. R. Ritter, J. W. Bozzelli, Int. J. Chem. Kinet. **23**, 767 (1991).

[41] R. Sabbah, R. Chastel, and M. Lafite, "Étude Thermochimique des Méthyl-Naphtalènes," Thermochim. Acta **10**, 353 (1974).

[42] S. E. Stein, "NIST Structures and Properties and Estimation Program" Version 2.0 Computerized Database 25, NIST (1994).

[43] J. J. P. Stewart, "Optimization of Parameters for Semiempirical Method. I. Method," J. Comput. Chem. **10**, 209 (1989); "Optimization of Parameters for Semiempirical Method." II Applications **10**, 221 (1989).

[44] J. J. P. Stewart, *Reviews of Computational Chemistry*, edited by K. B. Lipkowitz and D. B. Boyd (VCH, New York, 1990), p. 45.

[45] J. J. P. Stewart, MOPAC 7 Manual (1993).

[46] D. R. Stull, E. F. Westrum, and G. C. Sinke, *The Chemical Thermodynamics of Organic Compounds* (Wiley, New York, 1969).

[47] H. Wang, and M. Frenklach, "Enthalpies of Formation of Benzenoid Aromatic Molecules and Radicals," J. Phys. Chem. **97**, 3867 (1993).

[48] H. Wang, and M. Frenklach, "Calculations of Rate Coefficients for the Chemically Activated Reactions of Acetylene with Vinylic and Aromatic Radicals," J. Phys. Chem. **98**, 11465 (1994).